Title 246 WAC
HEALTH, DEPARTMENT OF

Chapters

AGENCY DESCRIPTION

246-01 Description and organization.
246-03 State Environmental Policy Act—Guidelines.
246-08 Practice and procedure.
246-10 Administrative procedure—Adjudicative proceedings.
246-11 Model procedural rules for boards.
246-12 Administrative procedures and requirements for credentialed health care providers.
246-14 Uniform procedures for complaint resolution.
246-15 Whistleblower complaints in health care settings.
246-16 Standards of professional conduct.
246-25 Antitrust immunity and competitive oversight.
246-50 Coordinated quality improvement program.
246-75 Medical marijuana.

COMMUNICABLE DISEASES

246-100 Communicable and certain other diseases.
246-101 Notifiable conditions.
246-102 Cancer registry.
246-105 Immunization of child care and school children against certain vaccine-preventable diseases.
246-110 Contagious disease—School districts and day care centers.

HUMAN IMMUNODEFICIENCY VIRUS (HIV)

246-130 Early intervention program.
246-136 Human immunodeficiency virus (HIV) infection—Occupational exposure notification.
246-138 Testing of good samaritans for certain infectious diseases.
246-140 Bloodborne pathogens in children placed in out-of-home care.
246-145 Electrology and tattooing standards for sterilization procedures and infection control.

TUBERCULOSIS

246-170 Tuberculosis—Prevention, treatment, and control.

ENVIRONMENTAL HEALTH

246-203 General sanitation.
246-205 Decontamination of illegal drug manufacturing or storage sites.

FOOD HANDLING

246-215 Food service.
246-217 Food worker cards.

RADIATION

246-220 Radiation protection—General provisions.
246-221 Radiation protection standards.
246-222 Radiation protection—Worker rights.
246-224 Radiation protection—Radiation machine assembly and registration.
246-225 Radiation protection—X rays in the healing arts.
246-225A Radiation safety and diagnostic image quality standards for dental facilities.
246-227 Radiation protection—Industrial X ray.
246-228 Radiation protection—Analytical X-ray equipment.
246-229 Radiation protection—Particle accelerators.
246-231 Packaging and transportation of radioactive material.
246-232 Radioactive material—Licensing applicability.
246-233 Radioactive materials—General licenses.
246-235 Radioactive materials—Specific licenses.
246-239 Radiation protection for subsequent use.
246-240 Radiation protection—Medical use of radioactive material.
246-243 Radiation protection—Industrial radiography.
246-244 Radiation protection—Wireline services.
246-246 Radioactive criteria for license termination.
246-247 Radiation protection—Air emissions.
246-249 Radioactive waste—Use of the commercial disposal site.
246-250 Radioactive waste—Licensing land disposal.
246-252 Radiation protection—Uranium and/or thorium milling.
246-254 Radiation protection—Fees.

RECREATIONAL WATER

246-260 Water recreation facilities.
246-262 Recreational water contact facilities.

SEWER SYSTEMS

246-270 Sewer systems—Certification of necessity for water district involvement.
246-271 Public sewage.
246-272 On-site sewage systems.
246-272A On-site sewage systems.
246-272B Large on-site sewage system regulations.
246-273 On-site sewage system additives.

SHELLFISH

246-280 Recreational shellfish beaches.
246-282 Sanitary control of shellfish.

WATER SYSTEMS

246-290 Group A public water supplies.
246-291 Group B public water systems.
246-292 Water works operator certification.
246-293 Water System Coordination Act.
246-294 Drinking water operating permits.
246-295 Satellite system management agencies.
246-296 Drinking water state revolving fund loan program.

FACILITY STANDARDS AND LICENSING

246-305 Certification of independent review organizations.
246-310 Certificate of need.
246-312 Acquisition of nonprofit hospitals.
246-314 Construction review services.
246-320 Hospital licensing regulations.
246-322 Private psychiatric and alcoholism hospitals.
246-324 Private alcohol and chemical dependency hospitals.
246-329 Childbirth centers.
246-335 In-home services agencies.
246-337 Residential treatment facility.
246-338 Medical test site rules.
246-358 Temporary worker housing.
246-359 Temporary worker housing construction standard.
246-360 Transient accommodations.
246-361 Cherry harvest camps.
246-366 Primary and secondary schools.
246-374 Outdoor music festivals.
246-376 Camps.
246-380 State institutional survey program.
246-390 Drinking water certification rules.

HEALTH INFORMATION

246-451 Hospitals—Assessments and related reports.
246-453 Hospital charity care.
246-454 Hospitals—System of accounting, financial reporting, budgeting, cost allocation.
246-455 Hospital patient discharge information reporting.
246-490 Vital statistics.
246-491 Vital statistics—Certificates.
246-500 Handling of human remains.

HEALTH PROMOTION AND CHRONIC DISEASE PREVENTION

246-560 Rural health system project.
246-562 Physician visa waivers.
246-564 Volunteer retired provider malpractice insurance program.

LABORATORY

246-650 Newborn screening.
246-680 Prenatal tests—Congenital and heritable disorders.

PARENT/CHILD HEALTH

246-710 Coordinated children's services.
246-760 Auditory and visual standards—School districts.
246-762 Scoliosis screening—School districts.
246-780 Farmers' market nutrition program.
246-790 Special supplemental nutrition program for women, infants, and children (WIC).

PROFESSIONAL STANDARDS AND LICENSING

246-800 General provisions—Professionals.
246-802 Acupuncturists.
246-808 Chiropractic quality assurance commission.
246-809 Licensure for mental health counselors, marriage and family therapists, and social workers.
246-810 Counselors.
246-811 Chemical dependency professionals.
246-812 Board of denture technology.
246-814 Access to dental care for children.
246-815 Dental hygienists.
246-817 Dental quality assurance commission.
246-822 Dieticians or nutritionists.
246-824 Dispensing opticians.
246-826 Health care assistants.
246-828 Hearing and speech.
246-830 Massage practitioners.
246-834 Midwives.
246-836 Naturopathic physicians.
246-840 Practical and registered nursing.
246-841 Nursing assistants.
246-842 Nursing assistants—Nursing homes—Nursing assistants training program.
246-843 Nursing home administrators.
246-845 Nursing pool.
246-847 Occupational therapists.
246-849 Ocularists.
246-850 Orthotics and prosthetics rules.
246-851 Optometrists.
246-852 Consumer access to vision care.
246-853 Osteopathic physicians and surgeons.
246-854 Osteopathic physicians' assistants.
246-855 Osteopathic physicians' acupuncture assistants.
246-856 Board of pharmacy—General.
246-858 Pharmacists—Internship requirements.
246-860 Standards of professional conduct.
246-861 Pharmacists—Professional pharmaceutical education.
246-863 Pharmacists—Licensing.
246-865 Pharmaceutical services—Extended care facility.
246-867 Impaired pharmacist rehabilitation.
246-869 Pharmacy licensing.
246-870 Electronic transmission of prescription information.
246-871 Pharmaceutical—Parenteral products for nonhospitalized patients.
246-872 Automated drug distribution devices.
246-873 Pharmacy—Hospital standards.
246-875 Pharmacy—Patient medication record systems.
246-877 Pharmaceutical—Sales prohibited.
246-878 Good compounding practices.
246-879 Pharmaceutical wholesalers.

246-881 **Pharmacy—Prescription drug price advertising.**
246-883 **Pharmaceutical—Sales requiring prescriptions.**
246-885 **Pharmacy—Identification, imprints, markings, and labeling of legend drugs.**
246-886 **Animal control—Legend drugs.**
246-887 **Pharmacy—Regulations implementing the Uniform Controlled Substances Act.**
246-888 **Medication assistance.**
246-889 **Pharmaceutical—Precursor substance control.**
246-891 **Pharmacy—Prophylactics.**
246-895 **Pharmacy—Good manufacturing practice for finished pharmaceuticals.**
246-897 **Pharmacy—Drug availability.**
246-899 **Pharmaceutical—Drug product substitution.**
246-901 **Pharmacy ancillary personnel.**
246-903 **Nuclear pharmacies and pharmacists.**
246-904 **Health care entities.**
246-905 **Pharmacy—Home dialysis program.**
246-907 **Pharmaceutical licensing periods and fees.**
246-915 **Physical therapists and physical therapist assistants.**
246-916 **Licensure requirements for athletic trainers.**
246-918 **Physician assistants—Medical quality assurance commission.**
246-919 **Medical quality assurance commission.**
246-922 **Podiatric physicians and surgeons.**
246-924 **Psychologists.**
246-926 **Radiological technologists.**
246-927 **Recreation therapy.**
246-928 **Respiratory care practitioners.**
246-930 **Sex offender treatment provider.**
246-933 **Veterinarians—Veterinary board.**
246-934 **Standards of professional conduct.**
246-935 **Veterinary technicians.**
246-937 **Registered veterinary medication clerks.**
246-939 **Surgical technologist program.**

TRAUMA/EMERGENCY MEDICAL SERVICES
246-976 **Emergency medical services and trauma care systems.**

DISPOSITION OF CHAPTERS FORMERLY CODIFIED IN THIS TITLE

Chapter 246-05
LOCAL PUBLIC HEALTH—GUIDELINES

246-05-001 Purpose. [Statutory Authority: RCW 43.70.020. 93-19-061, § 246-05-001, filed 9/13/93, effective 10/14/93.] Repealed by 99-03-062, filed 1/18/99, effective 2/18/99. Statutory Authority: RCW 43.70.480.

246-05-010 Definitions. [Statutory Authority: RCW 43.70.020. 93-19-061, § 246-05-010, filed 9/13/93, effective 10/14/93.] Repealed by 99-03-062, filed 1/18/99, effective 2/18/99. Statutory Authority: RCW 43.70.480.

246-05-020 Appendix—County, city, or town in a public health district, department, or county-city department. [Statutory Authority: RCW 43.20.050. 91-02-051 (Order 124B), recodified as § 246-05-020, filed 12/27/90, effective 1/31/91. Statutory Authority: RCW 70.46.080 and 43.20.050. 83-19-057 (Order 268), § 248-990-990, filed 9/20/83; 83-04-011 (Order 253), § 248-990-990, filed 1/24/83; Order 104, Appendix—Guidelines (codified as WAC 248-990-990), filed 9/25/74; Appendix, filed 8/4/67.] Repealed by 99-03-063, filed 1/18/99, effective 2/18/99. Statutory Authority: RCW 43.30.050 and 70.46.080.

246-05-030 Assurance of nonsupplanting. [Statutory Authority: RCW 43.70.020. 93-19-061, § 246-05-030, filed 9/13/93, effective 10/14/93.] Repealed by 99-03-062, filed 1/18/99, effective 2/18/99. Statutory Authority: RCW 43.70.480.

Chapter 246-09
REFUND OF FEES

246-09-060 Refund of fees. [Statutory Authority: RCW 43.01.072. 90-08-003 (Order 044), § 246-09-060, filed 3/22/90, effective 4/22/90.] Decodified by 91-02-049 (Order 121), filed 12/27/90, effective 1/31/91. Statutory Authority: RCW 43.70.040. Recodified as WAC 246-08-560.

Chapter 246-30
THE AWARDS PROGRAM

246-30-010 What is the AWARDS program? [Statutory Authority: RCW 43.70.040 (1) and (5), 43.70.020(5), 43.70.130, 43.70.060. 01-01-101, § 246-30-010, filed 12/15/00, effective 1/15/01.] Repealed by 02-02-015, filed 12/21/01, effective 1/21/02. Statutory Authority: RCW 43.70.020(5), 43.70.040, 43.70.060, 43.70.070, 43.70.130.

246-30-020 How does the AWARDS program work? [Statutory Authority: RCW 43.70.040 (1) and (5), 43.70.020(5), 43.70.130, 43.70.060. 01-01-101, § 246-30-020, filed 12/15/00, effective 1/15/01.] Repealed by 02-02-015, filed 12/21/01, effective 1/21/02. Statutory Authority: RCW 43.70.020(5), 43.70.040, 43.70.060, 43.70.070, 43.70.130.

246-30-030 Are there any limits on the AWARDS program? [Statutory Authority: RCW 43.70.040 (1) and (5), 43.70.020(5), 43.70.130, 43.70.060. 01-01-101, § 246-30-030, filed 12/15/00, effective 1/15/01.] Repealed by 02-02-015, filed 12/21/01, effective 1/21/02. Statutory Authority: RCW 43.70.020(5), 43.70.040, 43.70.060, 43.70.070, 43.70.130.

Chapter 246-132
CLASS IV HIV HEALTH INSURANCE ELIGIBILITY

246-132-020 Class IV human immunodeficiency virus (HIV) insurance program. [Statutory Authority: RCW 70.24.130 and 70.24.440. 92-02-018 (Order 224), § 246-132-020, filed 12/23/91, effective 1/23/92. Statutory Authority: RCW 43.70.040. 91-02-049 (Order 121), recodified as § 246-132-020, filed 12/27/90, effective 1/31/91. Statutory Authority: Chapter 70.24 RCW and 1989 c 260 § 3. 90-03-052 (Order 020), § 248-180-010, filed 1/16/90, effective 2/16/90.] Repealed by 94-06-048, filed 3/1/94, effective 4/1/94. Statutory Authority: RCW 70.24.130 and 70.24.440.

246-132-030 Eligibility. [Statutory Authority: RCW 43.70.040. 91-02-049 (Order 121), recodified as § 246-132-030, filed 12/27/90, effective 1/31/91. Statutory Authority: Chapter 70.24 RCW and 1989 c 260 § 3. 90-03-052 (Order 020), § 248-180-020, filed 1/16/90, effective 2/16/90.] Repealed by 94-06-048, filed 3/1/94, effective 4/1/94. Statutory Authority: RCW 70.24.130 and 70.24.440.

Chapter 246-171
TUBERCULOSIS—FINANCIAL RESPONSIBILITY

246-171-010 Definitions. [Statutory Authority: RCW 43.70.040. 91-02-049 (Order 121), recodified as § 246-171-010, filed 12/27/90, effective 1/31/91; Order 31, § 248-118-010, filed 8/18/69.] Repealed by 97-20-101, filed 9/29/97, effective 10/30/97. Statutory Authority: RCW 43.70.-040.

246-171-020 Statement of financial resources. [Statutory Authority: RCW 43.70.040. 91-02-049 (Order 121), recodified as § 246-171-020, filed 12/27/90, effective 1/31/91; Order 31, § 248-118-020, filed 8/18/69.] Repealed by 97-20-101, filed 9/29/97, effective 10/30/97. Statutory Authority: RCW 43.70.040.

246-171-030 Statement of financial resources—Cooperation in obtaining information. [Statutory Authority: RCW 43.70.040. 91-02-049 (Order 121), recodified as § 246-171-030, filed 12/27/90, effective 1/31/91; Order 31, § 248-118-021, filed 8/18/69.] Repealed by 97-20-101, filed 9/29/97, effective 10/30/97. Statutory Authority: RCW 43.70.040.

246-171-040 Statement of financial resources—Emergencies. [Statutory Authority: RCW 43.70.040. 91-02-049 (Order 121), recodified as § 246-171-040, filed 12/27/90, effective 1/31/91; Order 31, § 248-118-022, filed 8/18/69.] Repealed by 97-20-101, filed 9/29/97, effective 10/30/97. Statutory Authority: RCW 43.70.040.

246-171-050 Financial ability—Determination. [Statutory Authority: RCW 70.33.020 and 70.30.072. 92-02-018 (Order 224), § 246-171-050, filed 12/23/91, effective 1/23/92. Statutory Authority: RCW 43.70.040. 91-02-049 (Order 121), recodified as § 246-171-050, filed 12/27/90, effective 1/31/91; Order 31, § 248-118-030, filed 8/18/69.] Repealed by 97-20-101, filed 9/29/97, effective 10/30/97. Statutory Authority: RCW 43.70.040.

246-171-060 Financial ability—Forms. [Statutory Authority: RCW 43.70.040. 91-02-049 (Order 121), recodified as § 246-171-060, filed 12/27/90, effective 1/31/91; Order 31, § 248-118-040, filed 8/18/69.] Repealed by 97-20-101, filed 9/29/97, effective 10/30/97. Statutory Authority: RCW 43.70.040.

246-171-070 Financial ability—Review of financial ability. [Statutory Authority: RCW 43.70.040. 91-02-049 (Order 121), recodified as § 246-171-070, filed 12/27/90, effective 1/31/91; Order 31, § 248-118-050, filed 8/18/69.] Repealed by 97-20-101, filed 9/29/97, effective 10/30/97. Statutory Authority: RCW 43.70.040.

246-171-080 Financial ability—Standards generally. [Statutory Authority: RCW 43.70.040. 91-02-049 (Order 121), recodified as § 246-171-080, filed 12/27/90, effective 1/31/91; Order 31, § 248-118-060, filed 8/18/69.] Repealed by 97-20-101, filed 9/29/97, effective 10/30/97. Statutory Authority: RCW 43.70.040.

246-171-090 Financial ability—Inability to pay. [Statutory Authority: RCW 43.70.040. 91-02-049 (Order 121), recodified as § 246-171-090, filed 12/27/90, effective 1/31/91; Order 31, § 248-118-061, filed 8/18/69.] Repealed by 97-20-101, filed 9/29/97, effective 10/30/97. Statutory Authority: RCW 43.70.040.

246-171-100 Financial ability—Specific minimum standards. [Statutory Authority: RCW 43.70.040. 91-02-049 (Order 121), recodified as § 246-171-100, filed 12/27/90, effective 1/31/91; Order 31, § 248-118-070, filed 8/18/69.] Repealed by 97-20-101, filed 9/29/97, effective 10/30/97. Statutory Authority: RCW 43.70.040.

246-171-110 Payment by patient. [Statutory Authority: RCW 43.70.-040. 91-02-049 (Order 121), recodified as § 246-171-110, filed 12/27/90, effective 1/31/91; Order 31, § 248-118-080, filed 8/18/69.] Repealed by 97-20-101, filed 9/29/97, effective 10/30/97. Statutory Authority: RCW 43.70.040.

246-171-120 Liability of estate. [Statutory Authority: RCW 70.33.-020 and 70.30.072. 92-02-018 (Order 224), § 246-171-120, filed 12/23/91, effective 1/23/92. Statutory Authority: RCW 43.70.040. 91-02-049 (Order 121), recodified as § 246-171-120, filed 12/27/90, effective 1/31/91; Order 31, § 248-118-090, filed 8/18/69.] Repealed by 97-20-101, filed 9/29/97, effective 10/30/97. Statutory Authority: RCW 43.70.040.

246-171-130 Statement of costs. [Statutory Authority: RCW 43.70.040. 91-02-049 (Order 121), recodified as § 246-171-130, filed 12/27/90, effective 1/31/91; Order 31, § 248-118-100, filed 8/18/69.] Repealed by 97-20-101, filed 9/29/97, effective 10/30/97. Statutory Authority: RCW 43.70.040.

246-171-140 Payment by county. [Statutory Authority: RCW 43.70.-040. 91-02-049 (Order 121), recodified as § 246-171-140, filed 12/27/90, effective 1/31/91; Order 31, § 248-118-110, filed 8/18/69.] Repealed by 97-20-101, filed 9/29/97, effective 10/30/97. Statutory Authority: RCW 43.70.040.

Chapter 246-201
BASIC PLUMBING PRINCIPLES

246-201-001 Purpose and nature of regulations. [Statutory Authority: RCW 43.20.050. 91-02-051 (Order 124B), recodified as § 246-201-001, filed 12/27/90, effective 1/31/91; Regulation .94.001, effective 3/11/60.] Repealed by 96-19-043, filed 9/12/96, effective 10/13/96. Statutory Authority: RCW 43.20.050.

246-201-020 Water supply requirements. [Statutory Authority: RCW 43.20.050. 91-02-051 (Order 124B), recodified as § 246-201-020, filed 12/27/90, effective 1/31/91; Regulation .94.010, effective 3/11/60.] Repealed by 96-19-043, filed 9/12/96, effective 10/13/96. Statutory Authority: RCW 43.20.050.

246-201-030 Volume of flow. [Statutory Authority: RCW 43.20.050. 91-02-051 (Order 124B), recodified as § 246-201-030, filed 12/27/90, effective 1/31/91; Regulation .94.020, effective 3/11/60.] Repealed by 96-19-043, filed 9/12/96, effective 10/13/96. Statutory Authority: RCW 43.20.050.

246-201-040 Size of pipes. [Statutory Authority: RCW 43.20.050. 91-02-051 (Order 124B), recodified as § 246-201-040, filed 12/27/90, effective 1/31/91; Regulation .94.030, effective 3/11/60.] Repealed by 96-19-043, filed 9/12/96, effective 10/13/96. Statutory Authority: RCW 43.20.050.

246-201-050 Boilers and hot water tanks. [Statutory Authority: RCW 43.20.050. 91-02-051 (Order 124B), recodified as § 246-201-050, filed 12/27/90, effective 1/31/91; Regulation .94.040, effective 3/11/60.] Repealed by 96-19-043, filed 9/12/96, effective 10/13/96. Statutory Authority: RCW 43.20.050.

246-201-060 Sewage connection. [Statutory Authority: RCW 43.20.-050. 91-02-051 (Order 124B), recodified as § 246-201-060, filed 12/27/90, effective 1/31/91; Regulation .94.050, effective 3/11/60.] Repealed by 96-19-043, filed 9/12/96, effective 10/13/96. Statutory Authority: RCW 43.20.050.

246-201-070 Water closets—Multiple dwellings. [Statutory Authority: RCW 43.20.050. 91-02-051 (Order 124B), recodified as § 246-201-070, filed 12/27/90, effective 1/31/91; Regulation .94.060, effective 3/11/60.] Repealed by 96-19-043, filed 9/12/96, effective 10/13/96. Statutory Authority: RCW 43.20.050.

246-201-080 Plumbing fixtures. [Statutory Authority: RCW 43.20.-050. 91-02-051 (Order 124B), recodified as § 246-201-080, filed 12/27/90, effective 1/31/91; Regulation .94.070, effective 3/11/60.] Repealed by 96-19-043, filed 9/12/96, effective 10/13/96. Statutory Authority: RCW 43.20.050.

246-201-090 Drainage systems. [Statutory Authority: RCW 43.20.-050. 91-02-051 (Order 124B), recodified as § 246-201-090, filed 12/27/90, effective 1/31/91; Regulation .94.080, effective 3/11/60.] Repealed by 96-19-043, filed 9/12/96, effective 10/13/96. Statutory Authority: RCW 43.20.050.

246-201-100 Drainage pipes. [Statutory Authority: RCW 43.20.050. 91-02-051 (Order 124B), recodified as § 246-201-100, filed 12/27/90, effective 1/31/91; Regulation .94.090, effective 3/11/60.] Repealed by 96-19-043, filed 9/12/96, effective 10/13/96. Statutory Authority: RCW 43.20.050.

246-201-110 Cleanouts. [Statutory Authority: RCW 43.20.050. 91-02-051 (Order 124B), recodified as § 246-201-110, filed 12/27/90, effective 1/31/91; Regulation .94.100, effective 3/11/60.] Repealed by 96-19-043, filed 9/12/96, effective 10/13/96. Statutory Authority: RCW 43.20.-050.

246-201-120 Traps. [Statutory Authority: RCW 43.20.050. 91-02-051 (Order 124B), recodified as § 246-201-120, filed 12/27/90, effective 1/31/91; Regulation .94.110, effective 3/11/60.] Repealed by 96-19-043, filed 9/12/96, effective 10/13/96. Statutory Authority: RCW 43.20.-050.

246-201-130 Pipes—Adequate air circulation. [Statutory Authority: RCW 43.20.050. 91-02-051 (Order 124B), recodified as § 246-201-130, filed 12/27/90, effective 1/31/91; Regulation .94.120, effective 3/11/60.] Repealed by 96-19-043, filed 9/12/96, effective 10/13/96. Statutory Authority: RCW 43.20.050.

246-201-140 Soil stacks. [Statutory Authority: RCW 43.20.050. 91-02-051 (Order 124B), recodified as § 246-201-140, filed 12/27/90, effective 1/31/91; Regulation .94.130, effective 3/11/60.] Repealed by 96-19-043, filed 9/12/96, effective 10/13/96. Statutory Authority: RCW 43.20.-050.

246-201-150 Water and air pressure tests. [Statutory Authority: RCW 43.20.050. 91-02-051 (Order 124B), recodified as § 246-201-150, filed 12/27/90, effective 1/31/91; Regulation .94.140, effective 3/11/60.] Repealed by 96-19-043, filed 9/12/96, effective 10/13/96. Statutory Authority: RCW 43.20.050.

246-201-160 Clogging substances. [Statutory Authority: RCW 43.20.050. 91-02-051 (Order 124B), recodified as § 246-201-160, filed 12/27/90, effective 1/31/91; Regulation .94.150, effective 3/11/60.] Repealed by 96-19-043,

filed 9/12/96, effective 10/13/96. Statutory Authority: RCW 43.20.050.

246-201-170 Food receptacles and the drainage system. [Statutory Authority: RCW 43.20.050. 91-02-051 (Order 124B), recodified as § 246-201-170, filed 12/27/90, effective 1/31/91; Regulation .94.160, effective 3/11/60.] Repealed by 96-19-043, filed 9/12/96, effective 10/13/96. Statutory Authority: RCW 43.20.050.

246-201-180 Location of water closets. [Statutory Authority: RCW 43.20.050. 91-02-051 (Order 124B), recodified as § 246-201-180, filed 12/27/90, effective 1/31/91; Regulation .94.170, effective 3/11/60.] Repealed by 96-19-043, filed 9/12/96, effective 10/13/96. Statutory Authority: RCW 43.20.050.

246-201-190 Disposal where no sewers. [Statutory Authority: RCW 43.20.050. 91-02-051 (Order 124B), recodified as § 246-201-190, filed 12/27/90, effective 1/31/91; Regulation .94.180, effective 3/11/60.] Repealed by 96-19-043, filed 9/12/96, effective 10/13/96. Statutory Authority: RCW 43.20.050.

246-201-200 Backflow requirements. [Statutory Authority: RCW 43.20.050. 91-02-051 (Order 124B), recodified as § 246-201-200, filed 12/27/90, effective 1/31/91; Regulation .94.190, effective 3/11/60.] Repealed by 96-19-043, filed 9/12/96, effective 10/13/96. Statutory Authority: RCW 43.20.050.

246-201-210 Sanitary maintenance. [Statutory Authority: RCW 43.20.050. 91-02-051 (Order 124B), recodified as § 246-201-210, filed 12/27/90, effective 1/31/91; Regulation .94.200, effective 3/11/60.] Repealed by 96-19-043, filed 9/12/96, effective 10/13/96. Statutory Authority: RCW 43.20.050.

Chapter 246-255
RADIATION PROTECTION—FORMS

246-255 Forms. [Forms set forth within chapter 402-990 WAC were filed January 8, 1969, entitled "Instructions for preparation of application for radioactive material license," (Forms RHF-1, RHF-2, RHF-3, RHF-4, RHF-5, RHF-14-1, RHF-14-2). Chapter 402-990 WAC was recodified as chapter 246-255 by WSR 91-02-049 (Order 121), filed December 27, 1990, effective January 31, 1991. Statutory Authority: RCW 43.70.040.] Repealed by 96-19-041, filed 9/12/96, effective 10/13/96. Statutory Authority: RCW 43.70.040.

Chapter 246-264
WATER SAFETY TEACHING STATIONS

246-264-010 Definitions. [Statutory Authority: RCW 43.20.050. 91-02-051 (Order 124B), recodified as § 246-264-010, filed 12/27/90, effective 1/31/91; Order 34, § 248-132-010, filed 6/26/70.] Repealed by 96-19-043, filed 9/12/96, effective 10/13/96. Statutory Authority: RCW 43.20.-050.

246-264-020 Scope of chapter—Size and depth. [Statutory Authority: RCW 43.20.050. 92-02-020 (Order 226B), § 246-264-020, filed 12/23/91, effective 1/23/92; 91-02-051 (Order 124B), recodified as § 246-264-020, filed 12/27/90, effective 1/31/91; Order 34, § 248-132-020, filed 6/26/70.] Repealed by 96-19-043, filed 9/12/96, effective 10/13/96. Statutory Authority: RCW 43.20.050.

246-264-030 Approval for construction. [Statutory Authority: RCW 43.20.050. 92-02-020 (Order 226B), § 246-264-030, filed 12/23/91, effective 1/23/92; 91-02-051 (Order 124B), recodified as § 246-264-030, filed 12/27/90, effective 1/31/91; Order 34, § 248-132-030, filed 6/26/70.] Repealed by 96-19-043, filed 9/12/96, effective 10/13/96. Statutory Authority: RCW 43.20.050.

246-264-040 Drinking fountain. [Statutory Authority: RCW 43.20.050. 91-02-051 (Order 124B), recodified as § 246-264-040, filed 12/27/90, effective 1/31/91; Order 34, § 248-132-040, filed 6/26/70.] Repealed by 96-19-043, filed 9/12/96, effective 10/13/96. Statutory Authority: RCW 43.20.050.

246-264-050 Plans and specifications—Approval—Notice to local health officer. [Statutory Authority: RCW 43.20.050. 92-02-020 (Order 226B), § 246-264-050, filed 12/23/91, effective 1/23/92; 91-02-051 (Order 124B), recodified as § 246-264-050, filed 12/27/90, effective 1/31/91; Order 34, § 248-132-050, filed 6/26/70.] Repealed by 96-19-043, filed 9/12/96, effective 10/13/96. Statutory Authority: RCW 43.20.050.

246-264-060 Toilet facilities. [Statutory Authority: RCW 43.20.050. 91-02-051 (Order 124B), recodified as § 246-264-060, filed 12/27/90, effective 1/31/91; Order 34, § 248-132-060, filed 6/26/70.] Repealed by 96-19-043, filed 9/12/96, effective 10/13/96. Statutory Authority: RCW 43.20.050.

246-264-070 Location. [Statutory Authority: RCW 43.20.050. 91-02-051 (Order 124B), recodified as § 246-264-070, filed 12/27/90, effective 1/31/91; Order 34, § 248-132-070, filed 6/26/70.] Repealed by 96-19-043, filed 9/12/96, effective 10/13/96. Statutory Authority: RCW 43.20.-050.

246-264-080 Enclosure and cover. [Statutory Authority: RCW 43.20.050. 92-02-020 (Order 226B), § 246-264-080, filed 12/23/91, effective 1/23/92; 91-02-051 (Order 124B), recodified as § 246-264-080, filed 12/27/90, effective 1/31/91; Order 34, § 248-132-080, filed 6/26/70.] Repealed by 96-19-043, filed 9/12/96, effective 10/13/96. Statutory Authority: RCW 43.20.050.

246-264-090 Rinsing shower. [Statutory Authority: RCW 43.20.050. 91-02-051 (Order 124B), recodified as § 246-264-090, filed 12/27/90, effective 1/31/91; Order 34, § 248-132-090, filed 6/26/70.] Repealed by 96-19-043, filed 9/12/96, effective 10/13/96. Statutory Authority: RCW 43.20.050.

246-264-100 Foot rinse. [Statutory Authority: RCW 43.20.050. 91-02-051 (Order 124B), recodified as § 246-264-100, filed 12/27/90, effective 1/31/91; Order 34, § 248-132-100, filed 6/26/70.] Repealed by 96-19-043, filed 9/12/96, effective 10/13/96. Statutory Authority: RCW 43.20.-050.

246-264-110 Number of bathers permitted. [Statutory Authority: RCW 43.20.050. 91-02-051 (Order 124B), recodified as § 246-264-110, filed 12/27/90, effective 1/31/91; Order 34, § 248-132-110, filed 6/26/70.] Repealed by 96-19-043, filed 9/12/96, effective 10/13/96. Statutory Authority: RCW 43.20.050.

246-264-120 Water quality. [Statutory Authority: RCW 43.20.050. 92-02-020 (Order 226B), § 246-264-120, filed 12/23/91, effective 1/23/92; 91-02-051 (Order 124B), recodified as § 246-264-120, filed 12/27/90, effective 1/31/91; Order 34, § 248-132-120, filed 6/26/70.] Repealed by 96-19-043, filed 9/12/96, effective 10/13/96. Statutory Authority: RCW 43.20.050.

246-264-130 Chlorine content. [Statutory Authority: RCW 43.20.-050. 91-02-051 (Order 124B), recodified as § 246-264-130, filed 12/27/90, effective 1/31/91; Order 34, § 248-132-130, filed 6/26/70.] Repealed by 96-19-043, filed 9/12/96, effective 10/13/96. Statutory Authority: RCW 43.20.050.

246-264-140 Water recirculation. [Statutory Authority: RCW 43.20.-050. 92-02-020 (Order 226B), § 246-264-140, filed 12/23/91, effective 1/23/92; 91-02-051 (Order 124B), recodified as § 246-264-140, filed 12/27/90, effective 1/31/91; Order 34, § 248-132-140, filed 6/26/70.] Repealed by 96-19-043, filed 9/12/96, effective 10/13/96. Statutory Authority: RCW 43.20.050.

246-264-150 Operation and sanitary control. [Statutory Authority: RCW 43.20.050. 92-02-020 (Order 226B), § 246-264-150, filed 12/23/91, effective 1/23/92; 91-02-051 (Order 124B), recodified as § 246-264-150, filed 12/27/90, effective 1/31/91; Order 34, § 248-132-150, filed 6/26/70.] Repealed by 96-19-043, filed 9/12/96, effective 10/13/96. Statutory Authority: RCW 43.20.050.

246-264-160 Bath house. [Statutory Authority: RCW 43.20.050. 91-02-051 (Order 124B), recodified as § 246-264-160, filed 12/27/90, effective 1/31/91; Order 34, § 248-132-160, filed 6/26/70.] Repealed by 96-19-043, filed 9/12/96, effective 10/13/96. Statutory Authority: RCW 43.20.-050.

246-264-170 First aid. [Statutory Authority: RCW 43.20.050. 91-02-051 (Order 124B), recodified as § 246-264-170, filed 12/27/90, effective 1/31/91; Order 34, § 248-132-170, filed 6/26/70.] Repealed by 96-19-043, filed 9/12/96, effective 10/13/96. Statutory Authority: RCW 43.20.050.

246-264-180 Emergency telephone list. [Statutory Authority: RCW 43.20.050. 91-02-051 (Order 124B), recodified as § 246-264-180, filed 12/27/90, effective 1/31/91; Order 34, § 248-132-180, filed 6/26/70.] Repealed by 96-19-043, filed 9/12/96, effective 10/13/96. Statutory Authority: RCW 43.20.050.

246-264-190 Telephone required. [Statutory Authority: RCW 43.20.-050. 91-02-051 (Order 124B), recodified as § 246-264-190, filed 12/27/90, effective 1/31/91; Order 34, § 248-132-190, filed 6/26/70.] Repealed by 96-19-043, filed

9/12/96, effective 10/13/96. Statutory Authority: RCW 43.20.050.

246-264-200 Health menace prohibited. [Statutory Authority: RCW 43.20.050. 92-02-020 (Order 226B), § 246-264-200, filed 12/23/91, effective 1/23/92; 91-02-051 (Order 124B), recodified as § 246-264-200, filed 12/27/90, effective 1/31/91; Order 34, § 248-132-200, filed 6/26/70.] Repealed by 96-19-043, filed 9/12/96, effective 10/13/96. Statutory Authority: RCW 43.20.050.

Chapter 246-316
BOARDING HOMES

246-316-001 Purpose and scope. [Statutory Authority: RCW 18.20.090. 94-13-180, § 246-316-001, filed 6/21/94, effective 7/22/94. Statutory Authority: RCW 43.70.040. 91-02-049 (Order 121), recodified as § 246-316-001, filed 12/27/90, effective 1/31/91. Statutory Authority: 1985 c 213. 86-08-002 (Order 2348), § 248-16-999, filed 3/20/86; Regulation .16.999, effective 3/11/60.] Repealed by 97-20-101, filed 9/29/97, effective 10/30/97. Statutory Authority: RCW 43.70.040.

246-316-010 Definitions. [Statutory Authority: RCW 18.20.090. 94-13-180, § 246-316-010, filed 6/21/94, effective 7/22/94; 92-02-018 (Order 224), § 246-316-010, filed 12/23/91, effective 1/23/92. Statutory Authority: RCW 43.70.040. 91-02-049 (Order 121), Decodified as § 246-316-010, filed 12/27/90, effective 1/31/91. Statutory Authority: RCW 18.20.090. 89-09-034 (Order 2786), § 248-16-001, filed 4/14/89; 83-13-068 (Order 264), § 248-16-001, filed 6/16/83; Order 147, § 248-16-001, filed 6/29/77; Order 97, § 248-16-001, filed 4/5/74; § 248-16-001, filed 10/3/67; Emergency Regulation filed 8/4/67; Regulation.16.001, effective 3/11/60; Subsec. 6, Rule 1 and Subsec. 7, Rule 2, filed 5/31/61.] Decodified by 98-20-021, filed 9/25/98, effective 9/25/98. Statutory Authority: RCW 18.20.240.

246-316-020 Licensure—Initial, renewal, day care approval respite care, modifications. [Statutory Authority: RCW 18.20.090. 94-13-180, § 246-316-020, filed 6/21/94, effective 7/22/94. Statutory Authority: RCW 43.43.830 through 43.43.842. 93-16-030 (Order 381), § 246-316-020, filed 7/26/93, effective 8/26/93. Statutory Authority: RCW 18.20.090 and 34.05.220. 92-02-018 (Order 224), § 246-316-020, filed 12/23/91, effective 1/23/92. Statutory Authority: RCW 43.70.040. 91-02-049 (Order 121), Decodified as § 246-316-020, filed 12/27/90, effective 1/31/91. Statutory Authority: Chapter 34.05 RCW, RCW 34.05.220 (1)(a) and 18.20.909 [18.20.090]. 90-06-019 (Order 039), § 248-16-031, filed 2/28/90, effective 3/1/90. Statutory Authority: RCW 18.20.090. 89-09-034 (Order 2786), § 248-16-031, filed 4/14/89.] Decodified by 98-20-021, filed 9/25/98, effective 9/25/98. Statutory Authority: RCW 18.20.240.

246-316-030 Responsibilities and rights—Licensee and department. [Statutory Authority: RCW 18.20.090. 94-13-180, § 246-316-030, filed 6/21/94, effective 7/22/94; 92-02-018 (Order 224), § 246-316-030, filed 12/23/91, effective 1/23/92. Statutory Authority: RCW 43.70.040. 91-02-049 (Order 121), Decodified as § 246-316-030, filed 12/27/90, effective 1/31/91. Statutory Authority: RCW 18.20.090. 89-09-034 (Order 2786), § 248-16-033, filed 4/14/89.] Decodified by 98-20-021, filed 9/25/98, effective 9/25/98. Statutory Authority: RCW 18.20.240.

246-316-040 Administrator. [Statutory Authority: RCW 18.20.090. 94-13-180, § 246-316-040, filed 6/21/94, effective 7/22/94. Statutory Authority: RCW 43.43.830 through 43.43.842. 93-16-030 (Order 381), § 246-316-040, filed 7/26/93, effective 8/26/93. Statutory Authority: RCW 18.20.090. 92-02-018 (Order 224), § 246-316-040, filed 12/23/91, effective 1/23/92. Statutory Authority: RCW 43.70.040. 91-02-049 (Order 121), Decodified as § 246-316-040, filed 12/27/90, effective 1/31/91. Statutory Authority: RCW 18.20.090. 89-09-034 (Order 2786), § 248-16-036, filed 4/14/89.] Decodified by 98-20-021, filed 9/25/98, effective 9/25/98. Statutory Authority: RCW 18.20.240.

246-316-045 Criminal history, disclosure, and background inquiries. [Statutory Authority: RCW 18.20.090. 94-13-180, § 246-316-045, filed 6/21/94, effective 7/22/94. Statutory Authority: RCW 43.43.830 through 43.43.842. 93-16-030 (Order 381), § 246-316-045, filed 7/26/93, effective 8/26/93.] Decodified by 98-20-021, filed 9/25/98, effective 9/25/98. Statutory Authority: RCW 18.20.240.

246-316-050 Staff. [Statutory Authority: RCW 18.20.090. 94-13-180, § 246-316-050, filed 6/21/94, effective 7/22/94. Statutory Authority: RCW 43.43.830 through 43.43.-842. 93-16-030 (Order 381), § 246-316-050, filed 7/26/93, effective 8/26/93. Statutory Authority: RCW 43.70.040. 91-02-049 (Order 121), Decodified as § 246-316-050, filed 12/27/90, effective 1/31/91. Statutory Authority: RCW 18.20.090. 89-09-034 (Order 2786), § 248-16-046, filed 4/14/89.] Decodified by 98-20-021, filed 9/25/98, effective 9/25/98. Statutory Authority: RCW 18.20.240.

246-316-055 Policies and procedures. [Statutory Authority: RCW 18.20.090. 94-13-180, § 246-316-055, filed 6/21/94, effective 7/22/94.] Decodified by 98-20-021, filed 9/25/98, effective 9/25/98. Statutory Authority: RCW 18.20.240.

246-316-060 HIV/AIDS education and training. [Statutory Authority: RCW 18.20.090. 94-13-180, § 246-316-060, filed 6/21/94, effective 7/22/94. Statutory Authority: RCW 43.70.040. 91-02-049 (Order 121), Decodified as § 246-316-060, filed 12/27/90, effective 1/31/91. Statutory Authority: RCW 70.24.310. 89-21-038 (Order 3), § 248-16-048, filed 10/12/89, effective 11/12/89.] Decodified by 98-20-021, filed 9/25/98, effective 9/25/98. Statutory Authority: RCW 18.20.240.

246-316-070 Construction. [Statutory Authority: RCW 18.20.090. 94-13-180, § 246-316-070, filed 6/21/94, effective 7/22/94; 92-02-018 (Order 224), § 246-316-070, filed 12/23/91, effective 1/23/92. Statutory Authority: RCW 43.70.040. 91-02-049 (Order 121), Decodified as § 246-316-070, filed 12/27/90, effective 1/31/91. Statutory Authority: RCW 18.20.090. 89-09-034 (Order 2786), § 248-16-057, filed 4/14/89.] Decodified by 98-20-021, filed 9/25/98, effective 9/25/98. Statutory Authority: RCW 18.20.240.

246-316-080 Communication system. [Statutory Authority: RCW 18.20.090. 94-13-180, § 246-316-080, filed 6/21/94, effective 7/22/94. Statutory Authority: RCW 43.70.040. 91-02-049 (Order 121), Decodified as § 246-316-080, filed 12/27/90, effective 1/31/91. Statutory Authority: RCW 18.20.090. 89-09-034 (Order 2786), § 248-16-060, filed 4/14/89; 83-13-068 (Order 264), § 248-16-060, filed 6/16/83; Order 147, § 248-16-060, filed 6/29/77; Regulation.16.060, effective 3/11/60.] Decodified by 98-20-021, filed 9/25/98, effective 9/25/98. Statutory Authority: RCW 18.20.240.

246-316-090 Water supply. [Statutory Authority: RCW 18.20.090. 94-13-180, § 246-316-090, filed 6/21/94, effective 7/22/94; 92-02-018 (Order 224), § 246-316-090, filed 12/23/91, effective 1/23/92. Statutory Authority: RCW 43.70.040. 91-02-049 (Order 121), Decodified as § 246-316-090, filed 12/27/90, effective 1/31/91. Statutory Authority: RCW 18.20.090. 89-09-034 (Order 2786), § 248-16-070, filed 4/14/89; 83-13-068 (Order 264), § 248-16-070, filed 6/16/83; Order 147, § 248-16-070, filed 6/29/77; Regulation.16.070, effective 3/11/60.] Decodified by 98-20-021, filed 9/25/98, effective 9/25/98. Statutory Authority: RCW 18.20.240.

246-316-100 Sewage and liquid waste disposal. [Statutory Authority: RCW 18.20.090. 94-13-180, § 246-316-100, filed 6/21/94, effective 7/22/94; 92-02-018 (Order 224), § 246-316-100, filed 12/23/91, effective 1/23/92. Statutory Authority: RCW 43.70.040. 91-02-049 (Order 121), Decodified as § 246-316-100, filed 12/27/90, effective 1/31/91. Statutory Authority: RCW 18.20.-090. 89-09-034 (Order 2786), § 248-16-080, filed 4/14/89; Order 147, § 248-16-080, filed 6/29/77; Regulation.16.080, effective 3/11/60.] Decodified by 98-20-021, filed 9/25/98, effective 9/25/98. Statutory Authority: RCW 18.20.240.

246-316-110 Garbage and refuse disposal. [Statutory Authority: RCW 18.20.090. 94-13-180, § 246-316-110, filed 6/21/94, effective 7/22/94. Statutory Authority: RCW 43.70.040. 91-02-049 (Order 121), Decodified as § 246-316-110, filed 12/27/90, effective 1/31/91. Statutory Authority: RCW 18.20.090. 89-09-034 (Order 2786), § 248-16-090, filed 4/14/89; 83-13-068 (Order 264), § 248-16-090, filed 6/16/83; Order 147, § 248-16-090, filed 6/29/77; Regulation.16.090, effective 3/11/60.] Decodified by 98-20-021, filed 9/25/98, effective 9/25/98. Statutory Authority: RCW 18.20.240.

246-316-120 Lighting. [Statutory Authority: RCW 18.20.090. 94-13-180, § 246-316-120, filed 6/21/94, effective 7/22/94. Statutory Authority: RCW 43.70.040. 91-02-049

(Order 121), Decodified as § 246-316-120, filed 12/27/90, effective 1/31/91. Statutory Authority: RCW 18.20.090. 89-09-034 (Order 2786), § 248-16-105, filed 4/14/89; 83-13-068 (Order 264), § 248-16-105, filed 6/16/83.] Decodified by 98-20-021, filed 9/25/98, effective 9/25/98. Statutory Authority: RCW 18.20.240.

246-316-130 Heating—Temperature. [Statutory Authority: RCW 18.20.090. 94-13-180, § 246-316-130, filed 6/21/94, effective 7/22/94. Statutory Authority: RCW 43.70.040. 91-02-049 (Order 121), Decodified as § 246-316-130, filed 12/27/90, effective 1/31/91. Statutory Authority: RCW 18.20.090. 89-09-034 (Order 2786), § 248-16-110, filed 4/14/89; 83-13-068 (Order 264), § 248-16-110, filed 6/16/83; Order 147, § 248-16-110, filed 6/29/77; Regulation.16.110, effective 3/11/60.] Decodified by 98-20-021, filed 9/25/98, effective 9/25/98. Statutory Authority: RCW 18.20.240.

246-316-140 Ventilation. [Statutory Authority: RCW 18.20.090. 94-13-180, § 246-316-140, filed 6/21/94, effective 7/22/94. Statutory Authority: RCW 43.70.040. 91-02-049 (Order 121), Decodified as § 246-316-140, filed 12/27/90, effective 1/31/91. Statutory Authority: RCW 18.20.090. 89-09-034 (Order 2786), § 248-16-115, filed 4/14/89; 83-13-068 (Order 264), § 248-16-115, filed 6/16/83.] Decodified by 98-20-021, filed 9/25/98, effective 9/25/98. Statutory Authority: RCW 18.20.240.

246-316-150 Resident room—Room furnishings—Storage. [Statutory Authority: RCW 18.20.090. 94-13-180, § 246-316-150, filed 6/21/94, effective 7/22/94; 92-02-018 (Order 224), § 246-316-150, filed 12/23/91, effective 1/23/92. Statutory Authority: RCW 43.70.040. 91-02-049 (Order 121), Decodified as § 246-316-150, filed 12/27/90, effective 1/31/91. Statutory Authority: RCW 18.20.090. 89-09-034 (Order 2786), § 248-16-121, filed 4/14/89.] Decodified by 98-20-021, filed 9/25/98, effective 9/25/98. Statutory Authority: RCW 18.20.240.

246-316-160 Toilet rooms and bathrooms. [Statutory Authority: RCW 18.20.090. 94-13-180, § 246-316-160, filed 6/21/94, effective 7/22/94. Statutory Authority: RCW 43.70.040. 91-02-049 (Order 121), Decodified as § 246-316-160, filed 12/27/90, effective 1/31/91. Statutory Authority: RCW 18.20.090. 89-09-034 (Order 2786), § 248-16-131, filed 4/14/89.] Decodified by 98-20-021, filed 9/25/98, effective 9/25/98. Statutory Authority: RCW 18.20.240.

246-316-170 Food and nutrition services. [Statutory Authority: RCW 18.20.090. 94-13-180, § 246-316-170, filed 6/21/94, effective 7/22/94; 92-02-018 (Order 224), § 246-316-170, filed 12/23/91, effective 1/23/92. Statutory Authority: RCW 43.70.040. 91-02-049 (Order 121), Decodified as § 246-316-170, filed 12/27/90, effective 1/31/91. Statutory Authority: RCW 18.20.090. 89-09-034 (Order 2786), § 248-16-141, filed 4/14/89.] Decodified by 98-20-021, filed 9/25/98, effective 9/25/98. Statutory Authority: RCW 18.20.240.

246-316-180 Day rooms. [Statutory Authority: RCW 18.20.090. 94-13-180, § 246-316-180, filed 6/21/94, effective 7/22/94. Statutory Authority: RCW 43.70.040. 91-02-049 (Order 121), Decodified as § 246-316-180, filed 12/27/90, effective 1/31/91. Statutory Authority: RCW 18.20.090. 89-09-034 (Order 2786), § 248-16-150, filed 4/14/89; 83-13-068 (Order 264), § 248-16-150, filed 6/16/83; Order 147, § 248-16-150, filed 6/29/77; § 248-16-150, filed 10/3/67; Emergency Regulation, filed 8/4/67; Regulation.16.150, effective 3/11/60.] Decodified by 98-20-021, filed 9/25/98, effective 9/25/98. Statutory Authority: RCW 18.20.240.

246-316-190 Laundry. [Statutory Authority: RCW 18.20.090. 94-13-180, § 246-316-190, filed 6/21/94, effective 7/22/94. Statutory Authority: RCW 43.70.040. 91-02-049 (Order 121), Decodified as § 246-316-190, filed 12/27/90, effective 1/31/91. Statutory Authority: RCW 18.20.090. 89-09-034 (Order 2786), § 248-16-160, filed 4/14/89; 83-13-068 (Order 264), § 248-16-160, filed 6/16/83; Regulation.16.160, effective 3/11/60.] Decodified by 98-20-021, filed 9/25/98, effective 9/25/98. Statutory Authority: RCW 18.20.240.

246-316-200 Storage space. [Statutory Authority: RCW 18.20.090. 94-13-180, § 246-316-200, filed 6/21/94, effective 7/22/94; 92-02-018 (Order 224), § 246-316-200, filed 12/23/91, effective 1/23/92. Statutory Authority: RCW 43.70.040. 91-02-049 (Order 121), Decodified as § 246-316-200, filed 12/27/90, effective 1/31/91. Statutory Authority: RCW 18.20.090. 89-09-034 (Order 2786), § 248-16-170, filed 4/14/89; 83-13-068 (Order 264), § 248-16-170, filed 6/16/83; Regulation.16.170, effective 3/11/60.] Decodified by 98-20-021, filed 9/25/98, effective 9/25/98. Statutory Authority: RCW 18.20.240.

246-316-210 Stairs—Ramps. [Statutory Authority: RCW 18.20.090. 94-13-180, § 246-316-210, filed 6/21/94, effective 7/22/94. Statutory Authority: RCW 43.70.040. 91-02-049 (Order 121), Decodified as § 246-316-210, filed 12/27/90, effective 1/31/91. Statutory Authority: RCW 18.20.090. 89-09-034 (Order 2786), § 248-16-180, filed 4/14/89; 83-13-068 (Order 264), § 248-16-180, filed 6/16/83; Regulation.16.180, effective 3/11/60.] Decodified by 98-20-021, filed 9/25/98, effective 9/25/98. Statutory Authority: RCW 18.20.240.

246-316-220 Guardrails—Handrails. [Statutory Authority: RCW 18.20.090. 94-13-180, § 246-316-220, filed 6/21/94, effective 7/22/94. Statutory Authority: RCW 43.70.040. 91-02-049 (Order 121), Decodified as § 246-316-220, filed 12/27/90, effective 1/31/91. Statutory Authority: RCW 18.20.090. 89-09-034 (Order 2786), § 248-16-190, filed 4/14/89; 83-13-068 (Order 264), § 248-16-190, filed 6/16/83; Regulation.16.190, effective 3/11/60.] Decodified by 98-20-021, filed 9/25/98, effective 9/25/98. Statutory Authority: RCW 18.20.240.

246-316-230 Maintenance and housekeeping. [Statutory Authority: RCW 18.20.090. 94-13-180, § 246-316-230, filed 6/21/94, effective 7/22/94. Statutory Authority: RCW 43.70.040. 91-02-049 (Order 121), Decodified as § 246-316-230, filed 12/27/90, effective 1/31/91. Statutory Authority: RCW 18.20.090. 89-09-034 (Order 2786), § 248-16-202, filed 4/14/89; 83-13-068 (Order 264), § 248-16-202, filed 6/16/83; Order 147, § 248-16-202, filed 6/29/77.] Decodified by 98-20-021, filed 9/25/98, effective 9/25/98. Statutory Authority: RCW 18.20.-240.

246-316-240 Criteria for accepting and retaining residents. [Statutory Authority: RCW 18.20.090. 94-13-180, § 246-316-240, filed 6/21/94, effective 7/22/94; 94-01-058, § 246-316-240, filed 12/8/93, effective 1/8/94; 92-02-018 (Order 224), § 246-316-240, filed 12/23/91, effective 1/23/92. Statutory Authority: RCW 43.70.040. 91-02-049 (Order 121), Decodified as § 246-316-240, filed 12/27/90, effective 1/31/91. Statutory Authority: RCW 18.20.090. 89-09-034 (Order 2786), § 248-16-213, filed 4/14/89; 83-13-068 (Order 264), § 248-16-213, filed 6/16/83; Order 147, § 248-16-213, filed 6/29/77.] Decodified by 98-20-021, filed 9/25/98, effective 9/25/98. Statutory Authority: RCW 18.20.240.

246-316-250 Resident rights. [Statutory Authority: RCW 18.20.090. 94-13-180, § 246-316-250, filed 6/21/94, effective 7/22/94. Statutory Authority: RCW 43.70.040. 91-02-049 (Order 121), Decodified as § 246-316-250, filed 12/27/90, effective 1/31/91. Statutory Authority: RCW 18.20.090. 89-09-034 (Order 2786), § 248-16-215, filed 4/14/89; 83-13-068 (Order 264), § 248-16-215, filed 6/16/83; Order 147, § 248-16-215, filed 6/29/77; Order 116, § 248-16-215, filed 5/23/75; § 248-16-215, filed 10/3/67; Emergency Regulation, filed 8/4/67.] Decodified by 98-20-021, filed 9/25/98, effective 9/25/98. Statutory Authority: RCW 18.20.240.

246-316-260 Resident services. [Statutory Authority: RCW 18.20.-090. 94-13-180, § 246-316-260, filed 6/21/94, effective 7/22/94; 94-01-058, § 246-316-260, filed 12/8/93, effective 1/8/94. Statutory Authority: RCW 43.70.040. 91-02-049 (Order 121), Decodified as § 246-316-260, filed 12/27/90, effective 1/31/91. Statutory Authority: RCW 18.20.090. 89-09-034 (Order 2786), § 248-16-216, filed 4/14/89.] Decodified by 98-20-021, filed 9/25/98, effective 9/25/98. Statutory Authority: RCW 18.20.240.

246-316-265 Limited nursing services. [Statutory Authority: RCW 18.20.090. 94-13-180, § 246-316-265, filed 6/21/94, effective 7/22/94.] Decodified by 98-20-021, filed 9/25/98, effective 9/25/98. Statutory Authority: RCW 18.20.240.

246-316-268 Health care services—Resident-arranged. [Statutory Authority: RCW 18.20.090. 94-13-180, § 246-316-268, filed 6/21/94, effective 7/22/94.] Decodified by 98-20-021, filed 9/25/98, effective 9/25/98. Statutory Authority:

246-316-270 First aid services. [Statutory Authority: RCW 43.70.-040. 91-02-049 (Order 121), recodified as § 246-316-270, filed 12/27/90, effective 1/31/91. Statutory Authority: RCW 18.20.090. 89-09-034 (Order 2786), § 248-

16-222, filed 4/14/89; 83-13-068 (Order 264), § 248-16-222, filed 6/16/83; Order 147, § 248-16-222, filed 6/29/77.] Repealed by 94-13-180, filed 6/21/94, effective 7/22/94. Statutory Authority: RCW 18.20.090.

246-316-280 Notification—Change in resident's condition. [Statutory Authority: RCW 18.20.090. 94-13-180, § 246-316-280, filed 6/21/94, effective 7/22/94. Statutory Authority: RCW 43.70.040. 91-02-049 (Order 121), Decodified as § 246-316-280, filed 12/27/90, effective 1/31/91. Statutory Authority: RCW 18.20.090. 89-09-034 (Order 2786), § 248-16-223, filed 4/14/89; 83-13-068 (Order 264), § 248-16-223, filed 6/16/83; Order 147, § 248-16-223, filed 6/29/77.] Decodified by 98-20-021, filed 9/25/98, effective 9/25/98. Statutory Authority: RCW 18.20.240.

246-316-290 Safety measures and quality assurance. [Statutory Authority: RCW 18.20.090. 94-13-180, § 246-316-290, filed 6/21/94, effective 7/22/94. Statutory Authority: RCW 43.70.040. 91-02-049 (Order 121), Decodified as § 246-316-290, filed 12/27/90, effective 1/31/91. Statutory Authority: RCW 18.20.090. 89-09-034 (Order 2786), § 248-16-226, filed 4/14/89; 83-13-068 (Order 264), § 248-16-226, filed 6/16/83; Order 147, § 248-16-226, filed 6/29/77.] Decodified by 98-20-021, filed 9/25/98, effective 9/25/98. Statutory Authority: RCW 18.20.240.

246-316-300 Medication services. [Statutory Authority: RCW 18.20.090. 94-13-180, § 246-316-300, filed 6/21/94, effective 7/22/94. Statutory Authority: RCW 43.70.-040. 91-02-049 (Order 121), Decodified as § 246-316-300, filed 12/27/90, effective 1/31/91. Statutory Authority: RCW 18.20.090. 89-09-034 (Order 2786), § 248-16-229, filed 4/14/89.] Decodified by 98-20-021, filed 9/25/98, effective 9/25/98. Statutory Authority: RCW 18.20.240.

246-316-310 Resident register. [Statutory Authority: RCW 18.20.-090. 94-13-180, § 246-316-310, filed 6/21/94, effective 7/22/94. Statutory Authority: RCW 43.70.040. 91-02-049 (Order 121), Decodified as § 246-316-310, filed 12/27/90, effective 1/31/91. Statutory Authority: RCW 18.20.090. 89-09-034 (Order 2786), § 248-16-230, filed 4/14/89; 83-13-068 (Order 264), § 248-16-230, filed 6/16/83; Order 147, § 248-16-230, filed 6/29/77; Order 116, § 248-16-230, filed 5/23/75; § 248-16-230, filed 10/3/67; Emergency Regulation, filed 8/4/67; Regulation.16.230, effective 3/11/60; Subsection 1, filed 5/31/61.] Decodified by 98-20-021, filed 9/25/98, effective 9/25/98. Statutory Authority: RCW 18.20.240.

246-316-320 Resident health record. [Statutory Authority: RCW 18.20.090. 94-13-180, § 246-316-320, filed 6/21/94, effective 7/22/94; 92-02-018 (Order 224), § 246-316-320, filed 12/23/91, effective 1/23/92. Statutory Authority: RCW 43.70.040. 91-02-049 (Order 121), Decodified as § 246-316-320, filed 12/27/90, effective 1/31/91. Statutory Authority: RCW 18.20.090. 89-09-034 (Order 2786), § 248-16-235, filed 4/14/89; 83-13-068 (Order 264), § 248-16-235, filed 6/16/83.] Decodified by 98-20-021, filed 9/25/98, effective 9/25/98. Statutory Authority: RCW 18.20.240.

246-316-330 Adult day care. [Statutory Authority: RCW 18.20.090. 94-13-180, § 246-316-330, filed 6/21/94, effective 7/22/94; 92-02-018 (Order 224), § 246-316-330, filed 12/23/91, effective 1/23/92. Statutory Authority: RCW 43.70.040. 91-02-049 (Order 121), Decodified as § 246-316-330, filed 12/27/90, effective 1/31/91. Statutory Authority: RCW 18.20.090. 89-09-034 (Order 2786), § 248-16-300, filed 4/14/89.] Decodified by 98-20-021, filed 9/25/98, effective 9/25/98. Statutory Authority: RCW 18.20.240.

246-316-335 Residents—Dementia care. [Statutory Authority: RCW 18.20.090. 94-13-180, § 246-316-335, filed 6/21/94, effective 7/22/94.] Decodified by 98-20-021, filed 9/25/98, effective 9/25/98. Statutory Authority: RCW 18.20.240.

246-316-340 Exemptions. [Statutory Authority: RCW 18.20.090. 94-13-180, § 246-316-340, filed 6/21/94, effective 7/22/94. Statutory Authority: RCW 43.70.040. 91-02-049 (Order 121), Decodified as § 246-316-340, filed 12/27/90, effective 1/31/91. Statutory Authority: RCW 18.20.090. 89-09-034 (Order 2786), § 248-16-900, filed 4/14/89. Statutory Authority: 1985 c 213. 86-08-002 (Order 2348), § 248-16-900, filed 3/20/86; Order 147, § 248-16-900, filed 6/29/77.] Decodified by 98-20-021, filed 9/25/98, effective 9/25/98. Statutory Authority: RCW 18.20.240.

246-316-990 Fees. [Statutory Authority: RCW 18.20.050, 43.70.110 and 43.70.250. 98-01-165, § 246-316-990, filed 12/22/97, effective 1/22/98; 96-12-027, § 246-316-990, filed 5/30/96, effective 6/30/96. Statutory Authority: RCW 43.70.250, 43.70.110 and 43.20B.020. 95-12-097, § 246-316-990, filed 6/7/95, effective 7/8/95. Statutory Authority: RCW 43.70.110 and 43.70.250. 94-13-180, § 246-316-990, filed 6/21/94, effective 7/22/94. Statutory Authority: RCW 43.70.250. 92-12-086 (Order 276), § 246-316-990, filed 6/2/92, effective 7/1/92. Statutory Authority: RCW 43.70.040. 91-02-050 (Order 122), § 246-316-990, filed 12/27/90, effective 1/31/91.] Decodified by 98-20-021, filed 9/25/98, effective 9/25/98. Statutory Authority: RCW 18.20.240.

Reviser's note: Later promulgation, see chapter 388-78A WAC.

Chapter 246-318
HOSPITALS

246-318-010 Definitions. [Statutory Authority: RCW 70.41.030. 93-07-011 (Order 338), § 246-318-010, filed 3/5/93, effective 4/5/93; 92-02-018 (Order 224), § 246-318-010, filed 12/23/91, effective 1/23/92. Statutory Authority: RCW 43.70.040. 91-02-049 (Order 121), recodified as § 246-318-010, filed 12/27/90, effective 1/31/91. Statutory Authority: RCW 70.41.030. 90-24-044 (Order 115), § 248-18-001, filed 11/30/90, effective 12/31/90; 89-22-106 (Order 010), § 248-18-001, filed 11/1/89, effective 12/2/89; 88-18-021 (Order 2680), § 248-18-001, filed 8/30/88. Statutory Authority: 1985 c 213. 86-08-002 (Order 2348), § 248-18-001, filed 3/20/86. Statutory Authority: RCW 70.41.030 and 43.20.050. 84-17-077 (Order 275), § 248-18-001, filed 8/16/84; 83-19-058 (Order 269), § 248-18-001, filed 9/20/83; 83-01-003 (Order 245), § 248-18-001, filed 12/2/82. Statutory Authority: RCW 70.41.030. 81-05-029 (Order 209), § 248-18-001, filed 2/18/81; Order 135, § 248-18-001, filed 12/6/76; Order 119, § 248-18-001, filed 5/23/75; Order 106, § 248-18-001, filed 1/13/75; Order 91, § 248-18-001, filed 10/3/73; Order 83, § 248-18-001, filed 4/9/73; Order 50, § 248-18-001, filed 12/17/70; Regulation 18.001, effective 3/11/60.] Repealed by 99-04-052, filed 1/28/99, effective 3/10/99. Statutory Authority: RCW 70.41.030 and 43.70.040.

246-318-013 License expiration dates—Notice of decision—Adjudicative proceeding. [Statutory Authority: RCW 70.41.-030. 92-02-018 (Order 224), § 246-318-013, filed 12/23/91, effective 1/23/92. Statutory Authority: RCW 43.70.040. 91-02-049 (Order 121), recodified as § 246-318-013, filed 12/27/90, effective 1/31/91. Statutory Authority: Chapter 34.05 RCW, RCW 34.05.220 (1)(a) and 70.41.030. 90-06-019 (Order 039), § 248-18-015, filed 2/28/90, effective 3/1/90. Statutory Authority: RCW 70.41.030 and 43.20.050. 82-24-002 (Order 249), § 248-18-015, filed 11/18/82; Order 119, § 248-18-015, filed 5/23/75; Order 69, § 248-18-015, filed 1/13/72.] Repealed by 99-04-052, filed 1/28/99, effective 3/10/99. Statutory Authority: RCW 70.41.030 and 43.70.040.

246-318-015 Exemptions and interpretations. [Statutory Authority: RCW 70.41.030. 92-02-018 (Order 224), § 246-318-015, filed 12/23/91, effective 1/23/92. Statutory Authority: RCW 43.70.040. 91-02-049 (Order 121), recodified as § 246-318-015, filed 12/27/90, effective 1/31/91. Statutory Authority: Chapter 70.41 RCW. 90-12-014 (Order 061), § 248-18-010, filed 5/30/90, effective 6/30/90. Statutory Authority: 1985 c 213. 86-08-002 (Order 2348), § 248-18-010, filed 3/20/86. Statutory Authority: RCW 70.41.30 [70.41.030]. 81-05-029 (Order 209), § 248-18-010, filed 2/18/81; Order 142, § 248-18-010, filed 2/8/77; Order 119, § 248-18-010, filed 5/23/75; Order 50, § 248-18-010, filed 12/17/70; Order 22, § 248-18-010, filed 6/27/69; Order 10, § 248-18-010, filed 1/2/69; Regulation 18.010, effective 3/11/60; Subsection (3), filed 2/17/61.] Repealed by 99-04-052, filed 1/28/99, effective 3/10/99. Statutory Authority: RCW 70.41.030 and 43.70.040.

246-318-017 Single license to cover two or more buildings—When permissible. [Statutory Authority: RCW 70.41.030. 92-02-018 (Order 224), § 246-318-017, filed 12/23/91, effective 1/23/92. Statutory Authority: RCW 43.70.-040. 91-02-049 (Order 121), recodified as § 246-318-

017, filed 12/27/90, effective 1/31/91. Statutory Authority: RCW 70.41.030. 85-23-020 (Order 2305), § 248-18-017, filed 11/13/85; Order 119, § 248-18-017, filed 5/23/75.] Repealed by 99-04-052, filed 1/28/99, effective 3/10/99. Statutory Authority: RCW 70.41.030 and 43.70.040.

246-318-018 Hospital license to cover attached nursing home building—When permissible. [Statutory Authority: RCW 70.41.030. 92-02-018 (Order 224), § 246-318-018, filed 12/23/91, effective 1/23/92. Statutory Authority: RCW 43.70.040. 91-02-049 (Order 121), recodified as § 246-318-018, filed 12/27/90, effective 1/31/91. Statutory Authority: Chapter 70.41 RCW. 90-12-014 (Order 061), § 248-18-018, filed 5/30/90, effective 6/30/90; Order 119, § 248-18-018, filed 5/23/75.] Repealed by 97-20-101, filed 9/29/97, effective 10/30/97. Statutory Authority: RCW 43.70.040.

246-318-020 Approval of plans. [Statutory Authority: RCW 43.70.-040. 91-02-049 (Order 121), recodified as § 246-318-020, filed 12/27/90, effective 1/31/91. Statutory Authority: Chapter 70.41 RCW. 90-12-014 (Order 061), § 248-18-020, filed 5/30/90, effective 6/30/90; Order 119, § 248-18-020, filed 5/23/75; Regulation 18.020, effective 3/11/60.] Repealed by 99-04-052, filed 1/28/99, effective 3/10/99. Statutory Authority: RCW 70.41.030 and 43.70.040.

246-318-025 Required approval for occupancy after completion of new construction. [Statutory Authority: RCW 70.41.-030. 92-02-018 (Order 224), § 246-318-025, filed 12/23/91, effective 1/23/92. Statutory Authority: RCW 43.70.040. 91-02-049 (Order 121), recodified as § 246-318-025, filed 12/27/90, effective 1/31/91. Statutory Authority: RCW 70.41.030 and 43.20.050. 82-13-084 (Order 230), § 248-18-025, filed 6/22/82; Order 123, § 248-18-025, filed 3/18/76.] Repealed by 99-04-052, filed 1/28/99, effective 3/10/99. Statutory Authority: RCW 70.41.030 and 43.70.040.

246-318-030 Governing body and administration. [Statutory Authority: RCW 43.70.040. 91-02-049 (Order 121), recodified as § 246-318-030, filed 12/27/90, effective 1/31/91. Statutory Authority: RCW 70.41.030. 87-03-020 (Order 2463), § 248-18-031, filed 1/13/87. Statutory Authority: RCW 70.41.030 and 43.20.050. 84-17-077 (Order 275), § 248-18-031, filed 8/16/84.] Repealed by 99-04-052, filed 1/28/99, effective 3/10/99. Statutory Authority: RCW 70.41.030 and 43.70.040.

246-318-033 Medical staff. [Statutory Authority: RCW 43.70.040. 91-02-049 (Order 121), recodified as § 246-318-033, filed 12/27/90, effective 1/31/91. Statutory Authority: RCW 70.41.030 and 43.20.050. 84-17-077 (Order 275), § 248-18-033, filed 8/16/84.] Repealed by 99-04-052, filed 1/28/99, effective 3/10/99. Statutory Authority: RCW 70.41.030 and 43.70.040.

246-318-035 Infection control program. [Statutory Authority: RCW 70.41.030. 92-02-018 (Order 224), § 246-318-035, filed 12/23/91, effective 1/23/92. Statutory Authority: RCW 43.70.040. 91-02-049 (Order 121), recodified as § 246-318-035, filed 12/27/90, effective 1/31/91. Statutory Authority: RCW 70.41.030. 90-24-044 (Order 115), § 248-18-035, filed 11/30/90, effective 12/31/90. Statutory Authority: RCW 70.41.030 and 43.20.050. 89-21-039 (Order 4), § 248-18-035, filed 10/12/89, effective 11/12/89; Order 119, § 248-18-035, filed 5/23/75; Order 107, § 248-18-035, filed 1/13/75.] Repealed by 99-04-052, filed 1/28/99, effective 3/10/99. Statutory Authority: RCW 70.41.030 and 43.70.040.

246-318-040 Personnel. [Statutory Authority: RCW 43.43.830 through 43.43.842. 93-16-030 (Order 381), § 246-318-040, filed 7/26/93, effective 8/26/93. Statutory Authority: RCW 70.41.030. 92-02-018 (Order 224), § 246-318-040, filed 12/23/91, effective 1/23/92. Statutory Authority: RCW 43.70.040. 91-02-049 (Order 121), recodified as § 246-318-040, filed 12/27/90, effective 1/31/91. Statutory Authority: RCW 70.41.030. 90-24-044 (Order 115), § 248-18-040, filed 11/30/90, effective 12/31/90; 86-08-086 (Order 2362), § 248-18-040, filed 4/2/86. Statutory Authority: RCW 70.41.030 and 43.20.050. 82-24-003 (Order 250), § 248-18-040, filed 11/18/82. Statutory Authority: RCW 43.20.050. 80-02-003 (Order 191), § 248-18-040, filed 1/4/80; Order 121, § 241-18-040, filed 9/18/75; Order 119, § 248-18-040, filed 5/23/75; Order 91, § 248-18-040, filed 10/3/73; Order 76, § 248-18-040, filed 1/9/73; Regulation 18.040, effective 3/11/60.] Repealed by 99-04-052, filed 1/28/99, effective 3/10/99. Statutory Authority: RCW 70.41.030 and 43.70.040.

246-318-042 Criminal history, disclosure, and background inquiries. [Statutory Authority: RCW 43.43.830 through 43.43.-842. 93-16-030 (Order 381), § 246-318-042, filed 7/26/93, effective 8/26/93.] Repealed by 99-04-052, filed 1/28/99, effective 3/10/99. Statutory Authority: RCW 70.41.030 and 43.70.040.

246-318-050 Water supply. [Statutory Authority: RCW 43.70.040. 91-02-049 (Order 121), recodified as § 246-318-050, filed 12/27/90, effective 1/31/91; Order 119, § 248-18-055, filed 5/23/75.] Repealed by 97-20-101, filed 9/29/97, effective 10/30/97. Statutory Authority: RCW 43.70.040.

246-318-060 Plumbing. [Statutory Authority: RCW 43.70.040. 91-02-049 (Order 121), recodified as § 246-318-060, filed 12/27/90, effective 1/31/91. Statutory Authority: RCW 70.41.030. 79-04-004 (Order 175), § 248-18-060, filed 3/9/79; Order 119, § 248-18-060, filed 5/23/75; Regulation 18.060, effective 3/11/60.] Repealed by 97-20-101, filed 9/29/97, effective 10/30/97. Statutory Authority: RCW 43.70.040.

246-318-070 Staff facilities. [Statutory Authority: RCW 43.70.040. 91-02-049 (Order 121), recodified as § 246-318-070, filed 12/27/90, effective 1/31/91; Order 119, § 248-18-070, filed 5/23/75; Regulation 18.070, effective 3/11/60.] Repealed by 97-20-101, filed 9/29/97, effective 10/30/97. Statutory Authority: RCW 43.70.040.

246-318-080 Storage. [Statutory Authority: RCW 43.70.040. 91-02-049 (Order 121), recodified as § 246-318-080, filed 12/27/90, effective 1/31/91; Order 119, § 248-18-080, filed 5/23/75; Regulation 18.080, effective 3/11/60.] Repealed by 97-20-101, filed 9/29/97, effective 10/30/97. Statutory Authority: RCW 43.70.040.

246-318-090 Heating. [Statutory Authority: RCW 43.70.040. 91-02-049 (Order 121), recodified as § 246-318-090, filed 12/27/90, effective 1/31/91. Statutory Authority: RCW 70.41.030. 79-04-004 (Order 175), § 248-18-090, filed 3/9/79; Order 119, § 248-18-090, filed 5/23/75; Regulation 18.090, effective 3/11/60.] Repealed by 97-20-101, filed 9/29/97, effective 10/30/97. Statutory Authority: RCW 43.70.040.

246-318-100 Lighting and wiring. [Statutory Authority: RCW 43.70.040. 91-02-049 (Order 121), recodified as § 246-318-100, filed 12/27/90, effective 1/31/91; Order 119, § 248-18-100, filed 5/23/75; Regulation 18.100, effective 1/11/61.] Repealed by 97-20-101, filed 9/29/97, effective 10/30/97. Statutory Authority: RCW 43.70.040.

246-318-110 Emergency light and power. [Statutory Authority: RCW 43.70.040. 91-02-049 (Order 121), recodified as § 246-318-110, filed 12/27/90, effective 1/31/91. Statutory Authority: RCW 70.41.030. 79-04-081 (Order 176), § 248-18-110, filed 4/2/79; Order 119, § 248-18-110, filed 5/23/75; Regulation 18.110, effective 3/11/60.] Repealed by 97-20-101, filed 9/29/97, effective 10/30/97. Statutory Authority: RCW 43.70.040.

246-318-120 Ventilation. [Statutory Authority: RCW 43.70.040. 91-02-049 (Order 121), recodified as § 246-318-120, filed 12/27/90, effective 1/31/91; Order 119, § 248-18-120, filed 5/23/75; Regulation 18.120, effective 1/11/61.] Repealed by 97-20-101, filed 9/29/97, effective 10/30/97. Statutory Authority: RCW 43.70.040.

246-318-130 Corridors and doors. [Statutory Authority: RCW 43.70.040. 91-02-049 (Order 121), recodified as § 246-318-130, filed 12/27/90, effective 1/31/91; Order 119, § 248-18-130, filed 5/23/75; Regulation 18.130, effective 3/11/60.] Repealed by 97-20-101, filed 9/29/97, effective 10/30/97. Statutory Authority: RCW 43.70.040.

246-318-135 Carpets. [Statutory Authority: RCW 43.70.040. 91-02-049 (Order 121), recodified as § 246-318-135, filed 12/27/90, effective 1/31/91. Statutory Authority: RCW 70.41.030. 79-04-004 (Order 175), § 248-18-135, filed 3/9/79; Order 119, § 248-18-135, filed 5/23/75; Order 9, § 248-18-135, filed 1/2/69; Regulation 18.135, filed 8/4/67.] Repealed by 97-20-101, filed 9/29/97, effective 10/30/97. Statutory Authority: RCW 43.70.040.

246-318-140 Stairways, ramps, and elevators. [Statutory Authority: RCW 43.70.040. 91-02-049 (Order 121), recodified as § 246-318-140, filed 12/27/90, effective 1/31/91; Order 119, § 248-18-140, filed 5/23/75; Regulation 18.140, effective 3/11/60.] Repealed by 97-20-101, filed 9/29/97, effective 10/30/97. Statutory Authority: RCW 43.70.040.

246-318-150 Maintenance. [Statutory Authority: RCW 43.70.040. 91-02-049 (Order 121), recodified as § 246-318-150, filed 12/27/90, effective 1/31/91. Statutory Authority: RCW 70.41.030. 79-04-004 (Order 175), § 248-18-150, filed 3/9/79; Order 119, § 248-18-150, filed 5/23/75; Order 9, § 248-18-150, filed 1/2/69; Regulation 18.150, filed 8/4/67; Regulation 18.150, effective 3/11/60.] Repealed by 99-04-052, filed 1/28/99, effective 3/10/99. Statutory Authority: RCW 70.41.030 and 43.70.040.

246-318-155 Housekeeping. [Statutory Authority: RCW 43.70.040. 91-02-049 (Order 121), recodified as § 246-318-155, filed 12/27/90, effective 1/31/91. Statutory Authority: RCW 70.41.030. 79-04-004 (Order 175), § 248-18-155, filed 3/9/79.] Repealed by 99-04-052, filed 1/28/99, effective 3/10/99. Statutory Authority: RCW 70.41.030 and 43.70.040.

246-318-160 Laundry. [Statutory Authority: RCW 43.70.040. 91-02-049 (Order 121), recodified as § 246-318-160, filed 12/27/90, effective 1/31/91. Statutory Authority: RCW 70.41.030. 79-04-081 (Order 176), § 248-18-160, filed 4/2/79; Order 119, § 248-18-160, filed 5/23/75; Regulation 18.160, effective 3/11/60.] Repealed by 99-04-052, filed 1/28/99, effective 3/10/99. Statutory Authority: RCW 70.41.030 and 43.70.040.

246-318-170 Sewage, garbage, and waste. [Statutory Authority: RCW 43.70.040. 91-02-049 (Order 121), recodified as § 246-318-170, filed 12/27/90, effective 1/31/91. Statutory Authority: RCW 70.41.030. 79-04-004 (Order 175), § 248-18-170, filed 3/9/79; Order 119, § 248-18-170, filed 5/23/75; Regulation 18.170, effective 3/11/60.] Repealed by 99-04-052, filed 1/28/99, effective 3/10/99. Statutory Authority: RCW 70.41.030 and 43.70.040.

246-318-180 Dietary and/or food service. [Statutory Authority: RCW 70.41.030. 92-02-018 (Order 224), § 246-318-180, filed 12/23/91, effective 1/23/92. Statutory Authority: RCW 43.70.040. 91-02-049 (Order 121), recodified as § 246-318-180, filed 12/27/90, effective 1/31/91. Statutory Authority: RCW 70.41.030 and 43.20.050. 83-07-048 (Order 257), § 248-18-180, filed 3/18/83; Order 119, § 248-18-180, filed 5/23/75; § 248-18-180, filed 12/6/67; Regulation 18.180, effective 3/11/60.] Repealed by 99-04-052, filed 1/28/99, effective 3/10/99. Statutory Authority: RCW 70.41.030 and 43.70.040.

246-318-190 Patient care services, general. [Statutory Authority: RCW 43.70.040. 91-02-049 (Order 121), recodified as § 246-318-190, filed 12/27/90, effective 1/31/91. Statutory Authority: RCW 43.20.050 and 70.41.030. 84-02-036 (Order 271), § 248-18-190, filed 12/30/83. Statutory Authority: RCW 43.20.050 and chapter 70.41 RCW. 81-22-014 (Order 216), § 248-18-190, filed 10/23/81; Order 119, § 248-18-190, filed 5/23/75; Regulation 18.190, effective 3/11/60.] Repealed by 99-04-052, filed 1/28/99, effective 3/10/99. Statutory Authority: RCW 70.41.030 and 43.70.040.

246-318-200 Abuse reports—Children and developmentally disabled adults. [Statutory Authority: RCW 43.70.040. 91-02-049 (Order 121), recodified as § 246-318-200, filed 12/27/90, effective 1/31/91. Statutory Authority: RCW 70.41.030. 78-08-060 (Order 162), § 248-18-202, filed 7/24/78.] Repealed by 99-04-052, filed 1/28/99, effective 3/10/99. Statutory Authority: RCW 70.41.030 and 43.70.040.

246-318-210 Pediatric services. [Statutory Authority: RCW 70.41.-030. 92-02-018 (Order 224), § 246-318-210, filed 12/23/91, effective 1/23/92. Statutory Authority: RCW 43.70.040. 91-02-049 (Order 121), recodified as § 246-318-210, filed 12/27/90, effective 1/31/91. Statutory Authority: RCW 70.41.030. 89-22-106 (Order 010), § 248-18-216, filed 11/1/89, effective 12/2/89.] Repealed by 99-04-052, filed 1/28/99, effective 3/10/99. Statutory Authority: RCW 70.41.030 and 43.70.040.

246-318-220 Obstetrical services. [Statutory Authority: RCW 70.41.030. 92-02-018 (Order 224), § 246-318-220, filed 12/23/91, effective 1/23/92. Statutory Authority: RCW 43.70.040. 91-02-049 (Order 121), recodified as § 246-318-220, filed 12/27/90, effective 1/31/91. Statutory Authority: Chapter 70.41 RCW. 90-12-014 (Order 061), § 248-18-221, filed 5/30/90, effective 6/30/90. Statutory Authority: RCW 70.41.030. 89-22-106 (Order 010), § 248-18-221, filed 11/1/89, effective 12/2/89.] Repealed by 99-04-052, filed 1/28/99, effective 3/10/99. Statutory Authority: RCW 70.41.030 and 43.70.040.

246-318-230 Intermediate care nursery service—Neonatal intensive care nursery service. [Statutory Authority: RCW 70.41.030. 92-02-018 (Order 224), § 246-318-230, filed 12/23/91, effective 1/23/92. Statutory Authority: RCW 43.70.040. 91-02-049 (Order 121), recodified as § 246-318-230, filed 12/27/90, effective 1/31/91. Statutory Authority: RCW 70.41.030. 89-22-106 (Order 010), § 248-18-224, filed 11/1/89, effective 12/2/89.] Repealed by 99-04-052, filed 1/28/99, effective 3/10/99. Statutory Authority: RCW 70.41.030 and 43.70.040.

246-318-240 Critical care service. [Statutory Authority: RCW 43.70.040. 91-02-049 (Order 121), recodified as § 246-318-240, filed 12/27/90, effective 1/31/91. Statutory Authority: RCW 70.41.030. 90-24-044 (Order 115), § 248-318-240, filed 11/30/90, effective 12/31/90.] Repealed by 99-04-052, filed 1/28/99, effective 3/10/99. Statutory Authority: RCW 70.41.030 and 43.70.040.

246-318-250 Renal dialysis services. [Statutory Authority: RCW 70.41.030. 92-02-018 (Order 224), § 246-318-250, filed 12/23/91, effective 1/23/92. Statutory Authority: RCW 43.70.040. 91-02-049 (Order 121), recodified as § 246-318-250, filed 12/27/90, effective 1/31/91. Statutory Authority: RCW 70.41.030. 90-24-044 (Order 115), § 248-318-250, filed 11/30/90, effective 12/31/90.] Repealed by 99-04-052, filed 1/28/99, effective 3/10/99. Statutory Authority: RCW 70.41.030 and 43.70.040.

246-318-260 Long-term care services. [Statutory Authority: RCW 70.41.030. 92-02-018 (Order 224), § 246-318-260, filed 12/23/91, effective 1/23/92. Statutory Authority: RCW 43.70.040. 91-02-049 (Order 121), recodified as § 246-318-260, filed 12/27/90, effective 1/31/91. Statutory Authority: RCW 70.41.030. 90-24-044 (Order 115), § 248-318-260, filed 11/30/90, effective 12/31/90.] Repealed by 99-04-052, filed 1/28/99, effective 3/10/99. Statutory Authority: RCW 70.41.030 and 43.70.040.

246-318-270 Alcoholism and/or substance abuse unit. [Statutory Authority: RCW 70.41.030. 92-02-018 (Order 224), § 246-318-270, filed 12/23/91, effective 1/23/92. Statutory Authority: RCW 43.70.040. 91-02-049 (Order 121), recodified as § 246-318-270, filed 12/27/90, effective 1/31/91. Statutory Authority: RCW 70.41.030 and 43.20.050. 84-22-003 (Order 277), § 248-18-235, filed 10/26/84.] Repealed by 99-04-052, filed 1/28/99, effective 3/10/99. Statutory Authority: RCW 70.41.030 and 43.70.040.

246-318-280 Psychiatric units and services. [Statutory Authority: RCW 70.41.030. 92-02-018 (Order 224), § 246-318-280, filed 12/23/91, effective 1/23/92. Statutory Authority: RCW 43.70.040. 91-02-049 (Order 121), recodified as § 246-318-280, filed 12/27/90, effective 1/31/91. Statutory Authority: RCW 70.41.030. 90-23-012 (Order 113), § 248-18-240, filed 11/13/90, effective 12/14/90. Statutory Authority: RCW 70.41.030 and 43.20.050. 83-19-058 (Order 269), § 248-18-240, filed 9/20/83. Statutory Authority: RCW 43.20.050 and chapter 70.41 RCW. 81-22-014 (Order 216), § 248-18-240, filed 10/23/81; Order 119, § 248-18-240, filed 5/23/75; Regulation 18.240, effective 3/11/60.] Repealed by 99-04-052, filed 1/28/99, effective 3/10/99. Statutory Authority: RCW 70.41.030 and 43.70.040.

246-318-290 Surgery—Operating rooms and areas—Special procedure rooms—Surgical treatment or diagnostic areas. [Statutory Authority: RCW 70.41.030. 92-02-018 (Order 224), § 246-318-290, filed 12/23/91, effective 1/23/92. Statutory Authority: RCW 43.70.040. 91-02-049 (Order 121), recodified as § 246-318-290, filed 12/27/90, effective 1/31/91. Statutory Authority: RCW 70.41.030. 85-23-017 (Order 2302), § 248-18-251, filed 11/13/85.] Repealed by 99-04-052, filed 1/28/99, effective 3/10/99. Statutory Authority: RCW 70.41.030 and 43.70.040.

246-318-300 Anesthesia services. [Statutory Authority: RCW 70.41.030. 92-02-018 (Order 224), § 246-318-300, filed 12/23/91, effective 1/23/92. Statutory Authority: RCW 43.70.040. 91-02-049 (Order 121), recodified as § 246-318-300, filed 12/27/90, effective 1/31/91. Statutory Authority: RCW 70.41.030. 85-23-017 (Order 2302), § 248-18-253, filed 11/13/85.] Repealed by 99-04-052, filed 1/28/99, effective 3/10/99. Statutory Authority: RCW 70.41.030 and 43.70.040.

246-318-310 Post-anesthesia recovery areas. [Statutory Authority: RCW 70.41.030. 92-02-018 (Order 224), § 246-318-310, filed 12/23/91, effective 1/23/92. Statutory Authority: RCW 43.70.040. 91-02-049 (Order 121), recodified

as § 246-318-310, filed 12/27/90, effective 1/31/91. Statutory Authority: RCW 70.41.030. 85-23-017 (Order 2302), § 248-18-256, filed 11/13/85.] Repealed by 99-04-052, filed 1/28/99, effective 3/10/99. Statutory Authority: RCW 70.41.030 and 43.70.040.

246-318-320 Processing and sterilizing services. [Statutory Authority: RCW 43.70.040. 91-02-049 (Order 121), recodified as § 246-318-320, filed 12/27/90, effective 1/31/91. Statutory Authority: RCW 70.41.030 and 43.20.050. 85-05-034 (Order 281), § 248-18-260, filed 2/15/85; Order 119, § 248-18-260, filed 5/23/75; Regulation 18.260, effective 3/11/60.] Repealed by 99-04-052, filed 1/28/99, effective 3/10/99. Statutory Authority: RCW 70.41.030 and 43.70.040.

246-318-330 Use of medical gases, combustible anesthetics. [Statutory Authority: RCW 43.70.040. 91-02-049 (Order 121), recodified as § 246-318-330, filed 12/27/90, effective 1/31/91. Statutory Authority: RCW 70.41.030. 79-04-081 (Order 176), § 248-18-270, filed 4/2/79; Order 119, § 248-18-270, filed 5/23/75; Regulation 18.270, effective 3/11/60.] Repealed by 99-04-052, filed 1/28/99, effective 3/10/99. Statutory Authority: RCW 70.41.030 and 43.70.040.

246-318-340 Nonflammable medical gases. [Statutory Authority: RCW 43.70.040. 91-02-049 (Order 121), recodified as § 246-318-340, filed 12/27/90, effective 1/31/91. Statutory Authority: RCW 43.20.050. 79-12-038 (Order 187), § 248-18-280, filed 11/20/79. Statutory Authority: RCW 70.41.030. 79-04-081 (Order 176), § 248-18-280, filed 4/2/79; Order 119, § 248-18-280, filed 5/23/75; Regulation 18.280, effective 3/11/60.] Repealed by 97-20-101, filed 9/29/97, effective 10/30/97. Statutory Authority: RCW 43.70.040.

246-318-350 Emergency care services. [Statutory Authority: RCW 70.41.030. 92-02-018 (Order 224), § 246-318-350, filed 12/23/91, effective 1/23/92. Statutory Authority: RCW 43.70.040. 91-02-049 (Order 121), recodified as § 246-318-350, filed 12/27/90, effective 1/31/91; Order 142, § 248-18-285, filed 2/8/77; Order 119, § 248-18-285, filed 5/23/75; Order 110, § 248-18-285, filed 3/14/75; Order 106, § 248-18-285, filed 1/13/75.] Repealed by 99-04-052, filed 1/28/99, effective 3/10/99. Statutory Authority: RCW 70.41.030 and 43.70.040.

246-318-360 Diagnostic and treatment facilities, outpatient services. [Statutory Authority: RCW 43.70.040. 91-02-049 (Order 121), recodified as § 246-318-360, filed 12/27/90, effective 1/31/91; Order 119, § 248-18-290, filed 5/23/75; Order 106, § 248-18-290, filed 1/13/75; Regulation 18.290, effective 3/11/60.] Repealed by 97-20-101, filed 9/29/97, effective 10/30/97. Statutory Authority: RCW 43.70.040.

246-318-370 Laboratory. [Statutory Authority: RCW 70.41.030. 92-02-018 (Order 224), § 246-318-370, filed 12/23/91, effective 1/23/92. Statutory Authority: RCW 43.70.-040. 91-02-049 (Order 121), recodified as § 246-318-370, filed 12/27/90, effective 1/31/91. Statutory Authority: RCW 70.41.030. 87-23-056 (Order 2560), § 248-18-300, filed 11/18/87; Order 119, § 248-18-300, filed 5/23/75; Regulation 18.300, effective 3/11/60.] Repealed by 99-04-052, filed 1/28/99, effective 3/10/99. Statutory Authority: RCW 70.41.030 and 43.70.040.

246-318-380 Diagnostic and therapeutic radiology and other imaging services. [Statutory Authority: RCW 70.41.030. 92-02-018 (Order 224), § 246-318-380, filed 12/23/91, effective 1/23/92. Statutory Authority: RCW 43.70.040. 91-02-049 (Order 121), recodified as § 246-318-380, filed 12/27/90, effective 1/31/91. Statutory Authority: RCW 70.41.030. 89-22-109 (Order 008), § 248-18-311, filed 11/1/89, effective 12/2/89.] Repealed by 99-04-052, filed 1/28/99, effective 3/10/99. Statutory Authority: RCW 70.41.030 and 43.70.040.

246-318-390 Physical and occupational therapy services. [Statutory Authority: RCW 43.70.040. 91-02-049 (Order 121), recodified as § 246-318-390, filed 12/27/90, effective 1/31/91. Statutory Authority: RCW 70.41.030. 87-03-030 (Order 2464), § 248-18-312, filed 1/14/87.] Repealed by 99-04-052, filed 1/28/99, effective 3/10/99. Statutory Authority: RCW 70.41.030 and 43.70.040.

246-318-400 Respiratory care services. [Statutory Authority: RCW 43.70.040. 91-02-049 (Order 121), recodified as § 246-318-400, filed 12/27/90, effective 1/31/91. Statutory Authority: RCW 70.41.030. 79-04-081 (Order 176), § 248-18-315, filed 4/2/79.] Repealed by 99-04-052, filed 1/28/99, effective 3/10/99. Statutory Authority: RCW 70.41.030 and 43.70.040.

246-318-410 Other services. [Statutory Authority: RCW 70.41.030. 92-02-018 (Order 224), § 246-318-410, filed 12/23/91, effective 1/23/92. Statutory Authority: RCW 43.70.-040. 91-02-049 (Order 121), recodified as § 246-318-410, filed 12/27/90, effective 1/31/91. Statutory Authority: RCW 70.41.030. 87-03-030 (Order 2464), § 248-18-321, filed 1/14/87.] Repealed by 97-20-101, filed 9/29/97, effective 10/30/97. Statutory Authority: RCW 43.70.040.

246-318-420 Hospital pharmacy. [Statutory Authority: RCW 70.41.-030. 92-02-018 (Order 224), § 246-318-420, filed 12/23/91, effective 1/23/92. Statutory Authority: RCW 43.70.040. 91-02-049 (Order 121), recodified as § 246-318-420, filed 12/27/90, effective 1/31/91. Statutory Authority: RCW 43.20.050 and 70.41.030. 84-02-036 (Order 271), § 248-18-331, filed 12/30/83. Formerly WAC 248-18-330.] Repealed by 99-04-052, filed 1/28/99, effective 3/10/99. Statutory Authority: RCW 70.41.030 and 43.70.040.

246-318-430 Intravenous preparation. [Statutory Authority: RCW 43.70.040. 91-02-049 (Order 121), recodified as § 246-318-430, filed 12/27/90, effective 1/31/91. Statutory Authority: RCW 70.41.030. 83-13-061 (Order 261), § 248-18-335, filed 6/15/83.] Repealed by 97-20-101, filed 9/29/97, effective 10/30/97. Statutory Authority: RCW 43.70.040.

246-318-435 Intravenous administration. [Statutory Authority: RCW 70.41.030. 92-02-018 (Order 224), § 246-318-435, filed 12/23/91, effective 1/23/92. Statutory Authority: RCW 43.70.040. 91-02-049 (Order 121), recodified as § 246-318-435, filed 12/27/90, effective 1/31/91. Statutory Authority: RCW 70.41.030. 83-13-061 (Order 261), § 248-18-336, filed 6/15/83.] Repealed by 97-20-101, filed 9/29/97, effective 10/30/97. Statutory Authority: RCW 43.70.040.

246-318-440 Records and reports—Medical record system. [Statutory Authority: RCW 70.41.030. 92-02-018 (Order 224), § 246-318-440, filed 12/23/91, effective 1/23/92. Statutory Authority: RCW 43.70.040. 91-02-049 (Order 121), recodified as § 246-318-440, filed 12/27/90, effective 1/31/91. Statutory Authority: RCW 70.41.030. 88-18-021 (Order 2680), § 248-18-440, filed 8/30/88; 85-23-020 (Order 2305), § 248-18-440, filed 11/13/85; Order 142, § 248-18-440, filed 2/8/77; Order 135, § 248-18-440, filed 12/6/76; Order 119, § 248-18-440, filed 5/23/75; Regulation 18.440, effective 3/11/60.] Repealed by 99-04-052, filed 1/28/99, effective 3/10/99. Statutory Authority: RCW 70.41.030 and 43.70.040.

246-318-450 Discharge planning. [Statutory Authority: RCW 43.70.040. 91-02-049 (Order 121), recodified as § 246-318-450, filed 12/27/90, effective 1/31/91. Statutory Authority: RCW 70.41.030. 88-18-020 (Order 2679), § 248-18-445, filed 8/30/88.] Repealed by 99-04-052, filed 1/28/99, effective 3/10/99. Statutory Authority: RCW 70.41.030 and 43.70.040.

246-318-500 Applicability of WAC 246-318-500 through 246-318-99902. [Statutory Authority: RCW 70.41.030. 93-07-011 (Order 338), § 246-318-500, filed 3/5/93, effective 4/5/93. Statutory Authority: RCW 43.70.040. 91-02-049 (Order 121), recodified as § 246-318-500, filed 12/27/90, effective 1/31/91. Statutory Authority: RCW 70.41.030 and 43.20.050. 83-19-058 (Order 269), § 248-18-500, filed 9/20/83. Statutory Authority: RCW 70.41.30 [70.41.030]. 81-05-029 (Order 209), § 248-18-500, filed 2/18/81; Order 119, § 248-18-500, filed 5/23/75; Order 50, § 248-18-500, filed 12/17/70; Regulation 18.500, filed 1/25/62.] Repealed by 99-04-052, filed 1/28/99, effective 3/10/99. Statutory Authority: RCW 70.41.030 and 43.70.040.

246-318-501 Legal authority of the department. [Statutory Authority: RCW 43.70.040. 91-02-049 (Order 121), recodified as § 246-318-501, filed 12/27/90, effective 1/31/91. Statutory Authority: 1985 c 213. 86-08-002 (Order 2348), § 248-18-999, filed 3/20/86; Order 119, § 248-18-999, filed 5/23/75; Regulation 18.999, effective 3/11/60.] Repealed by 97-20-101, filed 9/29/97, effective 10/30/97. Statutory Authority: RCW 43.70.040.

246-318-510 Programs, drawings and construction. [Statutory Authority: RCW 70.41.030. 93-07-011 (Order 338), § 246-318-510, filed 3/5/93, effective 4/5/93. Statutory Authority: RCW 43.70.040. 91-02-049 (Order 121),

recodified as § 246-318-510, filed 12/27/90, effective 1/31/91. Statutory Authority: Chapter 70.41 RCW. 90-12-014 (Order 061), § 248-18-510, filed 5/30/90, effective 6/30/90. Statutory Authority: RCW 70.41.30 [70.41.030]. 81-05-029 (Order 209), § 248-18-510, filed 2/18/81. Statutory Authority: RCW 43.20.050. 80-03-062 (Order 193), § 248-18-510, filed 2/26/80; Order 123, § 248-18-510, filed 3/18/76; Order 119, § 248-18-510, filed 5/23/75; Order 9, § 248-18-510, filed 1/2/69; Regulation 18.520(2)(d), filed 8/4/67; Regulation 18.520 (part), filed 1/25/62.] Repealed by 99-04-052, filed 1/28/99, effective 3/10/99. Statutory Authority: RCW 70.41.030 and 43.70.040.

246-318-520 Design and construction standards, general. [Statutory Authority: RCW 70.41.030. 93-07-011 (Order 338), § 246-318-520, filed 3/5/93, effective 4/5/93. Statutory Authority: RCW 43.70.040. 91-02-049 (Order 121), recodified as § 246-318-520, filed 12/27/90, effective 1/31/91. Statutory Authority: RCW 70.41.030. 89-22-105 (Order 009), § 248-18-515, filed 11/1/89, effective 12/2/89; 88-23-083 (Order 2729), § 248-18-515, filed 11/18/88. Statutory Authority: 1985 c 213. 86-08-002 (Order 2348), § 248-18-515, filed 3/20/86. Statutory Authority: RCW 70.41.30 [70.41.030]. 81-05-029 (Order 209), § 248-18-515, filed 2/18/81; Order 119, § 248-18-515, filed 5/23/75; Order 50, § 248-18-515, filed 12/17/70; Order 22, § 248-18-515, filed 6/27/69; Regulation 18.530, filed 1/25/62.] Repealed by 99-04-052, filed 1/28/99, effective 3/10/99. Statutory Authority: RCW 70.41.030 and 43.70.040.

246-318-530 Site and site development. [Statutory Authority: RCW 70.41.030. 93-07-011 (Order 338), § 246-318-530, filed 3/5/93, effective 4/5/93. Statutory Authority: RCW 43.70.040. 91-02-049 (Order 121), recodified as § 246-318-530, filed 12/27/90, effective 1/31/91. Statutory Authority: Chapter 70.41 RCW. 90-12-014 (Order 061), § 248-18-520, filed 5/30/90, effective 6/30/90. Statutory Authority: RCW 70.41.030 and 43.20.050. 83-19-058 (Order 269), § 248-18-520, filed 9/20/83; Order 119, § 248-18-520, filed 5/23/75; Order 106, § 248-18-520, filed 1/13/75; Regulation 18.540, filed 1/25/62.] Repealed by 99-04-052, filed 1/28/99, effective 3/10/99. Statutory Authority: RCW 70.41.030 and 43.70.040.

246-318-540 General design requirements. [Statutory Authority: RCW 70.41.030. 93-07-011 (Order 338), § 246-318-540, filed 3/5/93, effective 4/5/93. Statutory Authority: RCW 43.70.040. 91-02-049 (Order 121), recodified as § 246-318-540, filed 12/27/90, effective 1/31/91. Statutory Authority: Chapter 70.41 RCW. 90-12-014 (Order 061), § 248-18-719, filed 5/30/90, effective 6/30/90. Statutory Authority: RCW 70.41.030. 89-22-105 (Order 009), § 248-18-719, filed 11/1/89, effective 12/2/89.] Repealed by 99-04-052, filed 1/28/99, effective 3/10/99. Statutory Authority: RCW 70.41.030 and 43.70.040.

246-318-550 General requirements for support facilities. [Statutory Authority: RCW 70.41.030. 93-07-011 (Order 338), § 246-318-550, filed 3/5/93, effective 4/5/93. Statutory Authority: RCW 43.70.040. 91-02-049 (Order 121), recodified as § 246-318-550, filed 12/27/90, effective 1/31/91. Statutory Authority: RCW 70.41.030. 89-22-105 (Order 009), § 248-18-711, filed 11/1/89, effective 12/2/89.] Repealed by 99-04-052, filed 1/28/99, effective 3/10/99. Statutory Authority: RCW 70.41.030 and 43.70.040.

246-318-560 Maintenance and mechanical facilities. [Statutory Authority: RCW 70.41.030. 93-07-011 (Order 338), § 246-318-560, filed 3/5/93, effective 4/5/93. Statutory Authority: RCW 43.70.040. 91-02-049 (Order 121), recodified as § 246-318-560, filed 12/27/90, effective 1/31/91. Statutory Authority: Chapter 70.41 RCW. 90-12-014 (Order 061), § 248-18-705, filed 5/30/90, effective 6/30/90; Order 119, § 248-18-705, filed 5/23/75; Regulation 18.750, filed 1/25/62.] Repealed by 99-04-052, filed 1/28/99, effective 3/10/99. Statutory Authority: RCW 70.41.030 and 43.70.040.

246-318-570 Administrative facilities. [Statutory Authority: RCW 70.41.030. 93-07-011 (Order 338), § 246-318-570, filed 3/5/93, effective 4/5/93. Statutory Authority: RCW 43.70.040. 91-02-049 (Order 121), recodified as § 246-318-570, filed 12/27/90, effective 1/31/91. Statutory Authority: Chapter 70.41 RCW. 90-12-014 (Order 061), § 248-18-525, filed 5/30/90, effective 6/30/90. Statutory Authority: RCW 70.41.030 and 43.20.050. 83-19-058 (Order 269), § 248-18-525, filed 9/20/83; Order 119, § 248-18-525, filed 5/23/75; Regulation 18.550, filed 1/25/62.] Repealed by 99-04-052, filed 1/28/99, effective 3/10/99. Statutory Authority: RCW 70.41.030 and 43.70.040.

246-318-580 Receiving, storage and distribution facilities. [Statutory Authority: RCW 70.41.030. 93-07-011 (Order 338), § 246-318-580, filed 3/5/93, effective 4/5/93. Statutory Authority: RCW 43.70.040. 91-02-049 (Order 121), recodified as § 246-318-580, filed 12/27/90, effective 1/31/91. Statutory Authority: RCW 70.41.030 and 43.20.050. 85-05-034 (Order 281), § 248-18-700, filed 2/15/85; Order 119, § 248-18-700, filed 5/23/75; Regulation 18.740, filed 1/25/62.] Repealed by 99-04-052, filed 1/28/99, effective 3/10/99. Statutory Authority: RCW 70.41.030 and 43.70.040.

246-318-590 Central sterilizing and processing service facilities. [Statutory Authority: RCW 70.41.030. 93-07-011 (Order 338), § 246-318-590, filed 3/5/93, effective 4/5/93. Statutory Authority: RCW 43.70.040. 91-02-049 (Order 121), recodified as § 246-318-590, filed 12/27/90, effective 1/31/91. Statutory Authority: Chapter 70.41 RCW. 90-12-014 (Order 061), § 248-18-680, filed 5/30/90, effective 6/30/90. Statutory Authority: RCW 70.41.030 and 43.20.050. 85-05-034 (Order 281), § 248-18-680, filed 2/15/85; 83-19-058 (Order 269), § 248-18-680, filed 9/20/83; Order 119, § 248-18-680, filed 5/23/75; Regulation 18.700, filed 1/25/62.] Repealed by 99-04-052, filed 1/28/99, effective 3/10/99. Statutory Authority: RCW 70.41.030 and 43.70.040.

246-318-600 Environmental services facilities. [Statutory Authority: RCW 70.41.030. 93-07-011 (Order 338), § 246-318-600, filed 3/5/93, effective 4/5/93. Statutory Authority: RCW 43.70.040. 91-02-049 (Order 121), recodified as § 246-318-600, filed 12/27/90, effective 1/31/91. Statutory Authority: Chapter 70.41 RCW. 90-12-014 (Order 061), § 248-18-690, filed 5/30/90, effective 6/30/90. Statutory Authority: RCW 70.41.030 and 43.20.050. 83-19-058 (Order 269), § 248-18-690, filed 9/20/83; Order 119, § 248-18-690, filed 5/23/75; Regulation 18.720, filed 1/25/62.] Repealed by 99-04-052, filed 1/28/99, effective 3/10/99. Statutory Authority: RCW 70.41.030 and 43.70.040.

246-318-610 Laundry facilities. [Statutory Authority: RCW 70.41.-030. 93-07-011 (Order 338), § 246-318-610, filed 3/5/93, effective 4/5/93. Statutory Authority: RCW 43.70.040. 91-02-049 (Order 121), recodified as § 246-318-610, filed 12/27/90, effective 1/31/91. Statutory Authority: Chapter 70.41 RCW. 90-12-014 (Order 061), § 248-18-695, filed 5/30/90, effective 6/30/90. Statutory Authority: RCW 70.41.030 and 43.20.050. 83-19-058 (Order 269), § 248-18-695, filed 9/20/83; Order 119, § 248-18-695, filed 5/23/75; Regulation 18.730, filed 1/25/62.] Repealed by 99-04-052, filed 1/28/99, effective 3/10/99. Statutory Authority: RCW 70.41.030 and 43.70.040.

246-318-620 Dietary facilities. [Statutory Authority: RCW 70.41.-030. 93-07-011 (Order 338), § 246-318-620, filed 3/5/93, effective 4/5/93. Statutory Authority: RCW 43.70.040. 91-02-049 (Order 121), recodified as § 246-318-620, filed 12/27/90, effective 1/31/91. Statutory Authority: Chapter 70.41 RCW. 90-12-014 (Order 061), § 248-18-685, filed 5/30/90, effective 6/30/90. Statutory Authority: RCW 70.41.030 and 43.20.050. 83-07-048 (Order 257), § 248-18-685, filed 3/18/83; Order 119, § 248-18-685, filed 5/23/75; Regulation 18.710, filed 1/25/62.] Repealed by 99-04-052, filed 1/28/99, effective 3/10/99. Statutory Authority: RCW 70.41.030 and 43.70.040.

246-318-630 Laboratory and pathology facilities. [Statutory Authority: RCW 70.41.030. 93-07-011 (Order 338), § 246-318-630, filed 3/5/93, effective 4/5/93. Statutory Authority: RCW 43.70.040. 91-02-049 (Order 121), recodified as § 246-318-630, filed 12/27/90, effective 1/31/91. Statutory Authority: Chapter 70.41 RCW. 90-12-014 (Order 061), § 248-18-660, filed 5/30/90, effective 6/30/90. Statutory Authority: RCW 70.41.030. 87-23-056 (Order 2560), § 248-18-660, filed 11/18/87. Statutory Authority: RCW 70.41.030 and 43.20.050. 83-19-058 (Order 269), § 248-18-660, filed 9/20/83; Order 119, § 248-18-660, filed 5/23/75; § 248-18-660, filed 10/3/67; Regulation 18.660, filed 1/25/62.]

Repealed by 99-04-052, filed 1/28/99, effective 3/10/99. Statutory Authority: RCW 70.41.030 and 43.70.040.

246-318-640 Pharmacy. [Statutory Authority: RCW 70.41.030. 93-07-011 (Order 338), § 246-318-640, filed 3/5/93, effective 4/5/93. Statutory Authority: RCW 43.70.040. 91-02-049 (Order 121), recodified as § 246-318-640, filed 12/27/90, effective 1/31/91. Statutory Authority: RCW 70.41.030. 83-13-067 (Order 262), § 248-18-670, filed 6/16/83; Order 119, § 248-18-670, filed 5/23/75; Regulation 18.680, filed 1/25/62.] Repealed by 99-04-052, filed 1/28/99, effective 3/10/99. Statutory Authority: RCW 70.41.030 and 43.70.040.

246-318-650 Radiology and other imaging facilities. [Statutory Authority: RCW 70.41.030. 93-07-011 (Order 338), § 246-318-650, filed 3/5/93, effective 4/5/93. Statutory Authority: RCW 43.70.040. 91-02-049 (Order 121), recodified as § 246-318-650, filed 12/27/90, effective 1/31/91. Statutory Authority: RCW 70.41.030. 89-22-109 (Order 008), § 248-18-656, filed 11/1/89, effective 12/2/89.] Repealed by 99-04-052, filed 1/28/99, effective 3/10/99. Statutory Authority: RCW 70.41.030 and 43.70.040.

246-318-660 Nuclear medicine facilities. [Statutory Authority: RCW 70.41.030. 93-07-011 (Order 338), § 246-318-660, filed 3/5/93, effective 4/5/93. Statutory Authority: RCW 43.70.040. 91-02-049 (Order 121), recodified as § 246-318-660, filed 12/27/90, effective 1/31/91. Statutory Authority: Chapter 70.41 RCW. 90-12-014 (Order 061), § 248-18-665, filed 5/30/90, effective 6/30/90; Order 119, § 248-18-665, filed 5/23/75; Regulation 18.670, filed 1/25/62.] Repealed by 99-04-052, filed 1/28/99, effective 3/10/99. Statutory Authority: RCW 70.41.030 and 43.70.040.

246-318-670 Electrocardiography facilities. [Statutory Authority: RCW 70.41.030. 93-07-011 (Order 338), § 246-318-670, filed 3/5/93, effective 4/5/93. Statutory Authority: RCW 43.70.040. 91-02-049 (Order 121), recodified as § 246-318-670, filed 12/27/90, effective 1/31/91. Statutory Authority: RCW 70.41.030. 87-03-030 (Order 2464), § 248-18-662, filed 1/14/87.] Repealed by 99-04-052, filed 1/28/99, effective 3/10/99. Statutory Authority: RCW 70.41.030 and 43.70.040.

246-318-680 Electroencephalography facilities. [Statutory Authority: RCW 70.41.030. 93-07-011 (Order 338), § 246-318-680, filed 3/5/93, effective 4/5/93. Statutory Authority: RCW 43.70.040. 91-02-049 (Order 121), recodified as § 246-318-680, filed 12/27/90, effective 1/31/91. Statutory Authority: RCW 70.41.030. 87-03-030 (Order 2464), § 248-18-663, filed 1/14/87.] Repealed by 99-04-052, filed 1/28/99, effective 3/10/99. Statutory Authority: RCW 70.41.030 and 43.70.040.

246-318-690 Nursing unit. [Statutory Authority: RCW 70.41.030. 93-07-011 (Order 338), § 246-318-690, filed 3/5/93, effective 4/5/93. Statutory Authority: RCW 43.70.040. 91-02-049 (Order 121), recodified as § 246-318-690, filed 12/27/90, effective 1/31/91. Statutory Authority: Chapter 70.41 RCW. 90-12-014 (Order 061), § 248-18-530, filed 5/30/90, effective 6/30/90. Statutory Authority: RCW 43.20.050 and chapter 70.41 RCW. 81-22-014 (Order 216), § 248-18-530, filed 10/23/81; Order 119, § 248-18-530, filed 5/23/75; Regulation 18.560, § § 1, 2 and 3, filed 1/25/62.] Repealed by 99-04-052, filed 1/28/99, effective 3/10/99. Statutory Authority: RCW 70.41.030 and 43.70.040.

246-318-700 Pediatric nursing unit. [Statutory Authority: RCW 70.41.030. 93-07-011 (Order 338), § 246-318-700, filed 3/5/93, effective 4/5/93. Statutory Authority: RCW 43.70.040. 91-02-049 (Order 121), recodified as § 246-318-700, filed 12/27/90, effective 1/31/91. Statutory Authority: RCW 70.41.030. 89-22-106 (Order 010), § 248-18-541, filed 11/1/89, effective 12/2/89.] Repealed by 99-04-052, filed 1/28/99, effective 3/10/99. Statutory Authority: RCW 70.41.030 and 43.70.040.

246-318-710 Emergency facilities. [Statutory Authority: RCW 70.41.030. 93-07-011 (Order 338), § 246-318-710, filed 3/5/93, effective 4/5/93. Statutory Authority: RCW 43.70.040. 91-02-049 (Order 121), recodified as § 246-318-710, filed 12/27/90, effective 1/31/91. Statutory Authority: Chapter 70.41 RCW. 90-12-014 (Order 061), § 248-18-645, filed 5/30/90, effective 6/30/90. Statutory Authority: RCW 70.41.030 and 43.20.050. 83-19-058 (Order 269), § 248-18-645, filed 9/20/83; Order 119, § 248-18-645, filed 5/23/75; Order 106, § 248-18-645, filed 1/13/75; Regulation 18.630, filed 1/25/62.] Repealed by 99-04-052, filed 1/28/99, effective 3/10/99. Statutory Authority: RCW 70.41.030 and 43.70.040.

246-318-720 Surgery suite. [Statutory Authority: RCW 70.41.030. 93-07-011 (Order 338), § 246-318-720, filed 3/5/93, effective 4/5/93. Statutory Authority: RCW 43.70.040. 91-02-049 (Order 121), recodified as § 246-318-720, filed 12/27/90, effective 1/31/91. Statutory Authority: Chapter 70.41 RCW. 90-12-014 (Order 061), § 248-18-565, filed 5/30/90, effective 6/30/90. Statutory Authority: RCW 70.41.030. 85-23-017 (Order 2302), § 248-18-565, filed 11/13/85. Statutory Authority: RCW 70.41.030 and 43.20.050. 83-19-058 (Order 269), § 248-18-565, filed 9/20/83; Order 119, § 248-18-565, filed 5/23/75; Order 107, § 248-18-565, filed 1/13/75; Regulation 18.590, § 1, filed 1/25/62.] Repealed by 99-04-052, filed 1/28/99, effective 3/10/99. Statutory Authority: RCW 70.41.030 and 43.70.040.

246-318-730 Recovery/post anesthesia care unit (PACU). [Statutory Authority: RCW 70.41.030. 93-07-011 (Order 338), § 246-318-730, filed 3/5/93, effective 4/5/93. Statutory Authority: RCW 43.70.040. 91-02-049 (Order 121), recodified as § 246-318-730, filed 12/27/90, effective 1/31/91. Statutory Authority: Chapter 70.41 RCW. 90-12-014 (Order 061), § 248-18-560, filed 5/30/90, effective 6/30/90. Statutory Authority: RCW 70.41.030. 85-23-017 (Order 2302), § 248-18-560, filed 11/13/85. Statutory Authority: RCW 70.41.030 and 43.20.050. 83-19-058 (Order 269), § 248-18-560, filed 9/20/83; Order 119, § 248-18-560, filed 5/23/75; Regulation 18.580, filed 1/25/62.] Repealed by 99-04-052, filed 1/28/99, effective 3/10/99. Statutory Authority: RCW 70.41.030 and 43.70.040.

246-318-740 Critical care facilities. [Statutory Authority: RCW 70.41.030. 93-07-011 (Order 338), § 246-318-740, filed 3/5/93, effective 4/5/93. Statutory Authority: RCW 43.70.040. 91-02-049 (Order 121), recodified as § 246-318-740, filed 12/27/90, effective 1/31/91. Statutory Authority: RCW 70.41.030. 90-24-044 (Order 115), § 248-318-740, filed 11/30/90, effective 12/31/90.] Repealed by 99-04-052, filed 1/28/99, effective 3/10/99. Statutory Authority: RCW 70.41.030 and 43.70.040.

246-318-750 Facilities for care of patients in labor. [Statutory Authority: RCW 70.41.030. 93-07-011 (Order 338), § 246-318-750, filed 3/5/93, effective 4/5/93. Statutory Authority: RCW 43.70.040. 91-02-049 (Order 121), recodified as § 246-318-750, filed 12/27/90, effective 1/31/91. Statutory Authority: RCW 70.41.030. 89-22-106 (Order 010), § 248-18-606, filed 11/1/89, effective 12/2/89.] Repealed by 99-04-052, filed 1/28/99, effective 3/10/99. Statutory Authority: RCW 70.41.030 and 43.70.040.

246-318-760 Obstetrical delivery facilities. [Statutory Authority: RCW 70.41.030. 93-07-011 (Order 338), § 246-318-760, filed 3/5/93, effective 4/5/93. Statutory Authority: RCW 43.70.040. 91-02-049 (Order 121), recodified as § 246-318-760, filed 12/27/90, effective 1/31/91. Statutory Authority: RCW 70.41.030. 89-22-106 (Order 010), § 248-18-601, filed 11/1/89, effective 12/2/89.] Repealed by 99-04-052, filed 1/28/99, effective 3/10/99. Statutory Authority: RCW 70.41.030 and 43.70.040.

246-318-770 Birthing rooms. [Statutory Authority: RCW 70.41.030. 93-07-011 (Order 338), § 246-318-770, filed 3/5/93, effective 4/5/93. Statutory Authority: RCW 43.70.040. 91-02-049 (Order 121), recodified as § 246-318-770, filed 12/27/90, effective 1/31/91. Statutory Authority: RCW 70.41.030. 89-22-106 (Order 010), § 248-18-608, filed 11/1/89, effective 12/2/89.] Repealed by 99-04-052, filed 1/28/99, effective 3/10/99. Statutory Authority: RCW 70.41.030 and 43.70.040.

246-318-780 Obstetrical recovery unit. [Statutory Authority: RCW 70.41.030. 93-07-011 (Order 338), § 246-318-780, filed 3/5/93, effective 4/5/93. Statutory Authority: RCW 43.70.040. 91-02-049 (Order 121), recodified as § 246-318-780, filed 12/27/90, effective 1/31/91; Order 119, § 248-18-610, filed 5/23/75; Order 107, § 248-18-610, filed 1/13/75; Regulation 18.600, § 13, filed 1/25/62.] Repealed by 99-04-052, filed 1/28/99, effective 3/10/99. Statutory Authority: RCW 70.41.030 and 43.70.040.

246-318-790 Newborn nursery facilities. [Statutory Authority: RCW 70.41.030. 93-07-011 (Order 338), § 246-318-790, filed 3/5/93, effective 4/5/93. Statutory Authority: RCW 43.70.040. 91-02-049 (Order 121), recodified as § 246-318-790, filed 12/27/90, effective 1/31/91. Statutory

Authority: RCW 70.41.030. 89-22-106 (Order 010), § 248-18-616, filed 11/1/89, effective 12/2/89.] Repealed by 99-04-052, filed 1/28/99, effective 3/10/99. Statutory Authority: RCW 70.41.030 and 43.70.040.

246-318-799 Infant formula facilities. [Statutory Authority: RCW 43.70.040. 91-02-049 (Order 121), recodified as § 246-318-799, filed 12/27/90, effective 1/31/91. Statutory Authority: Chapter 70.41 RCW. 90-12-014 (Order 061), § 248-18-640, filed 5/30/90, effective 6/30/90. Statutory Authority: RCW 70.41.030 and 43.20.050. 83-19-058 (Order 269), § 248-18-640, filed 9/20/83; Order 119, § 248-18-640, filed 5/23/75; Regulation 18.620, filed 1/25/62.] Repealed by 93-07-011 (Order 338), filed 3/5/93, effective 4/5/93. Statutory Authority: RCW 70.41.030.

246-318-800 Intermediate care nursery and neonatal intensive care nursery. [Statutory Authority: RCW 70.41.030. 93-07-011 (Order 338), § 246-318-800, filed 3/5/93, effective 4/5/93. Statutory Authority: RCW 43.70.040. 91-02-049 (Order 121), recodified as § 246-318-800, filed 12/27/90, effective 1/31/91. Statutory Authority: RCW 70.41.030. 89-22-106 (Order 010), § 248-18-637, filed 11/1/89, effective 12/2/89.] Repealed by 99-04-052, filed 1/28/99, effective 3/10/99. Statutory Authority: RCW 70.41.030 and 43.70.040.

246-318-810 Alcoholism and substance abuse nursing unit. [Statutory Authority: RCW 70.41.030. 93-07-011 (Order 338), § 246-318-810, filed 3/5/93, effective 4/5/93. Statutory Authority: RCW 43.70.040. 91-02-049 (Order 121), recodified as § 246-318-810, filed 12/27/90, effective 1/31/91. Statutory Authority: RCW 70.41.030 and 43.20.050. 84-22-003 (Order 277), § 248-18-532, filed 10/26/84.] Repealed by 99-04-052, filed 1/28/99, effective 3/10/99. Statutory Authority: RCW 70.41.030 and 43.70.040.

246-318-820 Psychiatric facilities. [Statutory Authority: RCW 70.41.030. 93-07-011 (Order 338), § 246-318-820, filed 3/5/93, effective 4/5/93. Statutory Authority: RCW 43.70.040. 91-02-049 (Order 121), recodified as § 246-318-820, filed 12/27/90, effective 1/31/91. Statutory Authority: RCW 70.41.030. 90-23-012 (Order 113), § 248-18-536, filed 11/13/90, effective 12/14/90.] Repealed by 99-04-052, filed 1/28/99, effective 3/10/99. Statutory Authority: RCW 70.41.030 and 43.70.040.

246-318-830 Rehabilitation facilities. [Statutory Authority: RCW 70.41.030. 93-07-011 (Order 338), § 246-318-830, filed 3/5/93, effective 4/5/93. Statutory Authority: RCW 43.70.040. 91-02-049 (Order 121), recodified as § 246-318-830, filed 12/27/90, effective 1/31/91. Statutory Authority: Chapter 70.41 RCW. 90-12-014 (Order 061), § 248-18-675, filed 5/30/90, effective 6/30/90. Statutory Authority: RCW 70.41.030 and 43.20.050. 83-19-058 (Order 269), § 248-18-675, filed 9/20/83; Order 119, § 248-18-675, filed 5/23/75; Regulation 18.690, filed 1/25/62.] Repealed by 99-04-052, filed 1/28/99, effective 3/10/99. Statutory Authority: RCW 70.41.030 and 43.70.040.

246-318-840 Outpatient care facilities. [Statutory Authority: RCW 70.41.030. 93-07-011 (Order 338), § 246-318-840, filed 3/5/93, effective 4/5/93. Statutory Authority: RCW 43.70.040. 91-02-049 (Order 121), recodified as § 246-318-840, filed 12/27/90, effective 1/31/91. Statutory Authority: Chapter 70.41 RCW. 90-12-014 (Order 061), § 248-18-568, filed 5/30/90, effective 6/30/90. Statutory Authority: RCW 70.41.030. 85-23-017 (Order 2302), § 248-18-568, filed 11/13/85.] Repealed by 99-04-052, filed 1/28/99, effective 3/10/99. Statutory Authority: RCW 70.41.030 and 43.70.040.

246-318-850 Special procedure facilities. [Statutory Authority: RCW 70.41.030. 93-07-011 (Order 338), § 246-318-850, filed 3/5/93, effective 4/5/93. Statutory Authority: RCW 43.70.040. 91-02-049 (Order 121), recodified as § 246-318-850, filed 12/27/90, effective 1/31/91. Statutory Authority: Chapter 70.41 RCW. 90-12-014 (Order 061), § 248-18-650, filed 5/30/90, effective 6/30/90. Statutory Authority: RCW 70.41.030 and 43.20.050. 83-19-058 (Order 269), § 248-18-650, filed 9/20/83; Order 119, § 248-18-650, filed 5/23/75; Regulation 18.640, filed 1/25/62.] Repealed by 99-04-052, filed 1/28/99, effective 3/10/99. Statutory Authority: RCW 70.41.030 and 43.70.040.

246-318-860 Dialysis facilities. [Statutory Authority: RCW 70.41.-030. 93-07-011 (Order 338), § 246-318-860, filed 3/5/93, effective 4/5/93. Statutory Authority: RCW 43.70.040. 91-02-049 (Order 121), recodified as § 246-318-860, filed 12/27/90, effective 1/31/91. Statutory Authority: RCW 70.41.030. 90-24-044 (Order 115), § 248-318-860, filed 11/30/90, effective 12/31/90.] Repealed by 99-04-052, filed 1/28/99, effective 3/10/99. Statutory Authority: RCW 70.41.030 and 43.70.040.

246-318-870 Long-term care unit. [Statutory Authority: RCW 70.41.030. 93-07-011 (Order 338), § 246-318-870, filed 3/5/93, effective 4/5/93. Statutory Authority: RCW 43.70.040. 91-02-049 (Order 121), recodified as § 246-318-870, filed 12/27/90, effective 1/31/91. Statutory Authority: RCW 70.41.030. 90-24-044 (Order 115), § 248-318-870, filed 11/30/90, effective 12/31/90.] Repealed by 99-04-052, filed 1/28/99, effective 3/10/99. Statutory Authority: RCW 70.41.030 and 43.70.040.

246-318-990 Fees. [Statutory Authority: RCW 70.41.100 and 43.20B.020. 98-13-035, § 246-318-990, filed 6/8/98, effective 7/9/98. Statutory Authority: RCW 43.70.250, 43.70.110 and 43.20B.020. 95-12-097, § 246-318-990, filed 6/7/95, effective 7/8/95. Statutory Authority: RCW 43.70.250. 92-12-028 (Order 273), § 246-318-990, filed 5/28/92, effective 6/28/92. Statutory Authority: RCW 43.70.040. 91-02-050 (Order 122), § 246-318-990, filed 12/27/90, effective 1/31/91.] Repealed by 99-04-052, filed 1/28/99, effective 3/10/99. Statutory Authority: RCW 70.41.030 and 43.70.040.

246-318-99902 Appendix B—Dates of documents adopted by reference in chapter 246-318 WAC. [Statutory Authority: RCW 70.41.030. 93-07-011 (Order 338), § 246-318-99902, filed 3/5/93, effective 4/5/93. Statutory Authority: RCW 43.70.040. 91-02-049 (Order 121), recodified as § 246-318-99902, filed 12/27/90, effective 1/31/91. Statutory Authority: Chapter 70.41 RCW. 90-12-014 (Order 061), § 248-18-99902, filed 5/30/90, effective 6/30/90. Statutory Authority: RCW 70.41.030. 89-22-105 (Order 009), § 248-18-99902, filed 11/1/89, effective 12/2/89; 88-16-086 (Order 2667), § 248-18-99902, filed 8/2/88; 87-04-061 (Order 2466), § 248-18-99902, filed 2/4/87. Statutory Authority: RCW 70.41.030 and 43.20.050. 85-05-033 (Order 280), § 248-18-99902, filed 2/15/85; 82-24-001 (Order 248), § 248-18-99902, filed 11/18/82.] Repealed by 99-04-052, filed 1/28/99, effective 3/10/99. Statutory Authority: RCW 70.41.030 and 43.70.040.

246-318-99910 Appendix J—Guidelines for laboratory quality assurance program in hospitals. [Statutory Authority: RCW 43.70.040. 91-02-049 (Order 121), recodified as § 246-318-99910, filed 12/27/90, effective 1/31/91. Statutory Authority: RCW 70.41.030. 87-24-038 (Order 2560), § 248-18-99910, filed 11/25/87.] Repealed by 99-04-052, filed 1/28/99, effective 3/10/99. Statutory Authority: RCW 70.41.030 and 43.70.040.

Reviser's note: Later promulgation, see chapter 246-320 WAC.

Chapter 246-321
HOSPICE CARE CENTER

246-321-001 Purpose. [Statutory Authority: RCW 43.70.040. 91-02-049 (Order 121), recodified as § 246-321-001, filed 12/27/90, effective 1/31/91. Statutory Authority: RCW 43.20.050. 81-23-003 (Order 218), § 248-21-001, filed 11/6/81.] Repealed by 97-03-080, filed 1/15/97, effective 2/15/97. Statutory Authority: RCW 43.70.040.

246-321-010 Definitions. [Statutory Authority: RCW 43.70.040. 92-02-018 (Order 224), § 246-321-010, filed 12/23/91, effective 1/23/92; 91-02-049 (Order 121), recodified as § 246-321-010, filed 12/27/90, effective 1/31/91. Statutory Authority: 1985 c 213. 86-08-002 (Order 2348), § 248-21-002, filed 3/20/86. Statutory Authority: RCW 43.20.050. 81-23-003 (Order 218), § 248-21-002, filed 11/6/81.] Repealed by 97-03-080, filed 1/15/97, effective 2/15/97. Statutory Authority: RCW 43.70.040.

246-321-012 Licensure—Notice of decision—Adjudicative proceeding. [Statutory Authority: RCW 43.70.040 and 34.05.-220. 92-02-018 (Order 224), § 246-321-012, filed 12/23/91, effective 1/23/92. Statutory Authority: RCW 43.70.040. 91-02-049 (Order 121), recodified as § 246-321-012, filed 12/27/90, effective 1/31/91. Statutory Authority: RCW 43.20.050 and chapter 34.05 RCW. 90-05-038 (Order 034), § 248-21-005, filed 2/14/90, effective 3/17/90. Statutory Authority: 43.20.050. 81-23-003 (Order 218), § 248-21-005, filed 11/6/81.]

Repealed by 97-03-080, filed 1/15/97, effective 2/15/97. Statutory Authority: RCW 43.70.040.

246-321-014 Governing body and administration. [Statutory Authority: RCW 43.70.040. 91-02-049 (Order 121), recodified as § 246-321-014, filed 12/27/90, effective 1/31/91. Statutory Authority: RCW 43.20.050. 81-23-003 (Order 218), § 248-21-010, filed 11/6/81.] Repealed by 97-03-080, filed 1/15/97, effective 2/15/97. Statutory Authority: RCW 43.70.040.

246-321-015 Staff—Personnel—Volunteers. [Statutory Authority: RCW 43.70.040. 91-02-049 (Order 121), recodified as § 246-321-015, filed 12/27/90, effective 1/31/91. Statutory Authority: RCW 43.20.050. 81-23-003 (Order 218), § 248-21-015, filed 11/6/81.] Repealed by 97-03-080, filed 1/15/97, effective 2/15/97. Statutory Authority: RCW 43.70.040.

246-321-017 HIV/AIDS education and training. [Statutory Authority: RCW 43.70.040 and 70.24.310. 92-02-018 (Order 224), § 246-321-017, filed 12/23/91, effective 1/23/92. Statutory Authority: RCW 43.70.040. 91-02-049 (Order 121), recodified as § 246-321-017, filed 12/27/90, effective 1/31/91. Statutory Authority: RCW 70.24.310. 89-21-038 (Order 3), § 248-21-017, filed 10/12/89, effective 11/12/89.] Repealed by 97-03-080, filed 1/15/97, effective 2/15/97. Statutory Authority: RCW 43.70.-040.

246-321-018 Criminal history, disclosure, and background inquiries. [Statutory Authority: RCW 43.43.830 through 43.43.-842. 93-16-030 (Order 381), § 246-321-018, filed 7/26/93, effective 8/26/93.] Repealed by 97-03-080, filed 1/15/97, effective 2/15/97. Statutory Authority: RCW 43.70.040.

246-321-020 Policies and procedures. [Statutory Authority: RCW 43.70.040. 91-02-049 (Order 121), recodified as § 246-321-020, filed 12/27/90, effective 1/31/91. Statutory Authority: RCW 43.20.050. 81-23-003 (Order 218), § 248-21-020, filed 11/6/81.] Repealed by 97-03-080, filed 1/15/97, effective 2/15/97. Statutory Authority: RCW 43.70.040.

246-321-025 Patient care services. [Statutory Authority: RCW 43.70.040. 91-02-049 (Order 121), recodified as § 246-321-025, filed 12/27/90, effective 1/31/91. Statutory Authority: RCW 43.20.050. 81-23-003 (Order 218), § 248-21-025, filed 11/6/81.] Repealed by 97-03-080, filed 1/15/97, effective 2/15/97. Statutory Authority: RCW 43.70.040.

246-321-030 Food and dietary services. [Statutory Authority: RCW 43.70.040. 92-02-018 (Order 224), § 246-321-030, filed 12/23/91, effective 1/23/92; 91-02-049 (Order 121), recodified as § 246-321-030, filed 12/27/90, effective 1/31/91. 91-02-049 (Order 121), recodified as § 246-321-030, filed 12/27/90, effective 1/31/91. Statutory Authority: RCW 43.20.050. 81-23-003 (Order 218), § 248-21-030, filed 11/6/81.] Repealed by 97-03-080, filed 1/15/97, effective 2/15/97. Statutory Authority: RCW 43.70.040.

246-321-035 Infection control. [Statutory Authority: RCW 43.70.-040. 92-02-018 (Order 224), § 246-321-035, filed 12/23/91, effective 1/23/92; 91-02-049 (Order 121), recodified as § 246-321-035, filed 12/27/90, effective 1/31/91. Statutory Authority: RCW 70.41.30 [70.41.-030] and 43.20.050. 83-07-015 (Order 254), § 248-21-035, filed 3/10/83. Statutory Authority: RCW 43.20.-050. 81-23-003 (Order 218), § 248-21-035, filed 11/6/81.] Repealed by 97-03-080, filed 1/15/97, effective 2/15/97. Statutory Authority: RCW 43.70.040.

246-321-040 Pharmaceutical service. [Statutory Authority: RCW 43.70.040. 91-02-049 (Order 121), recodified as § 246-321-040, filed 12/27/90, effective 1/31/91. Statutory Authority: RCW 43.20.050. 81-23-003 (Order 218), § 248-21-040, filed 11/6/81.] Repealed by 97-03-080, filed 1/15/97, effective 2/15/97. Statutory Authority: RCW 43.70.040.

246-321-045 Clinical records. [Statutory Authority: RCW 43.70.040. 91-02-049 (Order 121), recodified as § 246-321-045, filed 12/27/90, effective 1/31/91. Statutory Authority: RCW 43.20.050. 81-23-003 (Order 218), § 248-21-045, filed 11/6/81.] Repealed by 97-03-080, filed 1/15/97, effective 2/15/97. Statutory Authority: RCW 43.70.-040.

246-321-050 Physical environment and equipment. [Statutory Authority: RCW 43.70.040. 92-02-018 (Order 224), § 246-321-050, filed 12/23/91, effective 1/23/92; 91-02-049 (Order 121), recodified as § 246-321-050, filed 12/27/90, effective 1/31/91. Statutory Authority: RCW 43.20.050. 81-23-003 (Order 218), § 248-21-050, filed 11/6/81.] Repealed by 97-03-080, filed 1/15/97, effective 2/15/97. Statutory Authority: RCW 43.70.040.

246-321-055 Nonflammable medical gases—Respiratory care. [Statutory Authority: RCW 43.70.040. 91-02-049 (Order 121), recodified as § 246-321-055, filed 12/27/90, effective 1/31/91. Statutory Authority: RCW 43.20.050. 81-23-003 (Order 218), § 248-21-055, filed 11/6/81.] Repealed by 97-03-080, filed 1/15/97, effective 2/15/97. Statutory Authority: RCW 43.70.040.

246-321-990 Fees. [Statutory Authority: RCW 43.70.040. 91-02-050 (Order 122), § 246-321-990, filed 12/27/90, effective 1/31/91.] Repealed by 97-03-080, filed 1/15/97, effective 2/15/97. Statutory Authority: RCW 43.70.040.

Chapter 246-323
RESIDENTIAL TREATMENT FACILITIES FOR PSYCHIATRICALLY IMPAIRED CHILDREN AND YOUTH

246-323-010 Definitions. [Statutory Authority: RCW 43.70.040 and chapter 71.12 RCW. 92-02-018 (Order 224), § 246-323-010, filed 12/23/91, effective 1/23/92. Statutory Authority: RCW 43.70.040. 91-02-049 (Order 121), recodified as § 246-323-010, filed 12/27/90, effective 1/31/91. Statutory Authority: Chapter 71.12 RCW. 82-23-004 (Order 1899), § 248-23-001, filed 11/4/82. Statutory Authority: RCW 43.20.050. 80-03-079 (Order 194), § 248-23-001, filed 3/3/80.] Repealed by 05-15-157, filed 7/20/05, effective 8/20/05. Statutory Authority: Chapter 71.12 RCW.

246-323-020 Licensure. [Statutory Authority: RCW 43.70.040 and chapter 71.12 RCW. 92-02-018 (Order 224), § 246-323-020, filed 12/23/91, effective 1/23/92. Statutory Authority: RCW 43.70.040. 91-02-049 (Order 121), recodified as § 246-323-020, filed 12/27/90, effective 1/31/91. Statutory Authority: Chapter 34.05 RCW, RCW 34.05.-220 (1)(a) and 1989 1st ex.s. c 9 § 106. 90-06-019 (Order 039), § 248-23-010, filed 2/28/90, effective 3/1/90. Statutory Authority: Chapter 71.12 RCW. 82-23-004 (Order 1899), § 248-23-010, filed 11/4/82. Statutory Authority: RCW 43.20.050. 80-03-079 (Order 194), § 248-23-010, filed 3/3/80.] Repealed by 05-15-157, filed 7/20/05, effective 8/20/05. Statutory Authority: Chapter 71.12 RCW.

246-323-022 Criminal history, disclosure, and background inquiries. [Statutory Authority: RCW 43.43.830 through 43.43.842. 93-16-030 (Order 381), § 246-323-022, filed 7/26/93, effective 8/26/93.] Repealed by 05-15-157, filed 7/20/05, effective 8/20/05. Statutory Authority: Chapter 71.12 RCW.

246-323-030 Administration. [Statutory Authority: RCW 43.70.040. 91-02-049 (Order 121), recodified as § 246-323-030, filed 12/27/90, effective 1/31/91. Statutory Authority: Chapter 71.12 RCW. 82-23-004 (Order 1899), § 248-23-020, filed 11/4/82. Statutory Authority: RCW 43.20.050. 80-03-079 (Order 194), § 248-23-020, filed 3/3/80.] Repealed by 05-15-157, filed 7/20/05, effective 8/20/05. Statutory Authority: Chapter 71.12 RCW.

246-323-040 HIV/AIDS education and training. [Statutory Authority: RCW 43.70.040, 70.24.310 and chapter 71.12 RCW. 92-02-018 (Order 224), § 246-323-040, filed 12/23/91, effective 1/23/92. Statutory Authority: RCW 43.70.-040. 91-02-049 (Order 121), recodified as § 246-323-040, filed 12/27/90, effective 1/31/91. Statutory Authority: RCW 70.24.310. 89-21-038 (Order 3), § 248-23-025, filed 10/12/89, effective 11/12/89.] Repealed by 05-15-157, filed 7/20/05, effective 8/20/05. Statutory Authority: Chapter 71.12 RCW.

246-323-050 Client care services. [Statutory Authority: RCW 43.70.-040 and chapter 71.12 RCW. 92-02-018 (Order 224), § 246-323-050, filed 12/23/91, effective 1/23/92. Statutory Authority: RCW 43.70.040. 91-02-049 (Order 121), recodified as § 246-323-050, filed 12/27/90, effective 1/31/91. Statutory Authority: Chapter 71.12 RCW. 82-23-004 (Order 1899), § 248-23-030, filed 11/4/82. Statutory Authority: RCW 43.20.050. 80-03-079 (Order 194), § 248-23-030, filed 3/3/80.] Repealed by 05-15-157, filed 7/20/05, effective 8/20/05. Statutory Authority: Chapter 71.12 RCW.

246-323-060 Pharmaceutical services. [Statutory Authority: RCW 43.70.040. 91-02-049 (Order 121), recodified as § 246-323-060, filed 12/27/90, effective 1/31/91. Statutory Authority: Chapter 71.12 RCW. 82-23-004 (Order 1899), § 248-23-040, filed 11/4/82. Statutory Authority:

RCW 43.20.050. 80-03-079 (Order 194), § 248-23-040, filed 3/3/80.] Repealed by 05-15-157, filed 7/20/05, effective 8/20/05. Statutory Authority: Chapter 71.12 RCW.

246-323-070 Infection control. [Statutory Authority: RCW 43.70.-040 and chapter 71.12 RCW. 92-02-018 (Order 224), § 246-323-070, filed 12/23/91, effective 1/23/92. Statutory Authority: RCW 43.70.040. 91-02-049 (Order 121), recodified as § 246-323-070, filed 12/27/90, effective 1/31/91. Statutory Authority: Chapter 71.12 RCW. 83-10-079 (Order 1960), § 248-23-050, filed 5/4/83; 82-23-004 (Order 1899), § 248-23-050, filed 11/4/82. Statutory Authority: RCW 43.20.050. 80-03-079 (Order 194), § 248-23-050, filed 3/3/80.] Repealed by 05-15-157, filed 7/20/05, effective 8/20/05. Statutory Authority: Chapter 71.12 RCW.

246-323-080 Clinical records. [Statutory Authority: RCW 43.70.040. 91-02-049 (Order 121), recodified as § 246-323-080, filed 12/27/90, effective 1/31/91. Statutory Authority: Chapter 71.12 RCW. 82-23-004 (Order 1899), § 248-23-060, filed 11/4/82. Statutory Authority: RCW 43.20.050. 80-03-079 (Order 194), § 248-23-060, filed 3/3/80.] Repealed by 05-15-157, filed 7/20/05, effective 8/20/05. Statutory Authority: Chapter 71.12 RCW.

246-323-090 Physical environment. [Statutory Authority: RCW 43.70.040 and chapter 71.12 RCW. 92-02-018 (Order 224), § 246-323-090, filed 12/23/91, effective 1/23/92. Statutory Authority: RCW 43.70.040. 91-02-049 (Order 121), recodified as § 246-323-090, filed 12/27/90, effective 1/31/91. Statutory Authority: Chapter 71.12 RCW. 82-23-004 (Order 1899), § 248-23-070, filed 11/4/82. Statutory Authority: RCW 43.20.050. 80-03-079 (Order 194), § 248-23-070, filed 3/3/80.] Repealed by 05-15-157, filed 7/20/05, effective 8/20/05. Statutory Authority: Chapter 71.12 RCW.

246-323-990 Fees. [Statutory Authority: RCW 43.70.250 and 71.12.470. 04-19-140, § 246-323-990, filed 9/22/04, effective 10/23/04. Statutory Authority: RCW 43.70.-250. 03-14-147, § 246-323-990, filed 7/2/03, effective 8/1/03; 02-16-068, § 246-323-990, filed 8/5/02, effective 9/5/02. Statutory Authority: RCW 71.12.470, 43.70.110 and 43.70.250. 01-15-091, § 246-323-990, filed 7/18/01, effective 8/18/01. Statutory Authority: RCW 71.12.470, 43.70.110, 43.70.250 and 43.208.020. 99-24-094, § 246-323-990, filed 11/30/99, effective 12/31/99. Statutory Authority: RCW 43.70.250, 43.70.-110 and 43.20B.020. 95-12-097, § 246-323-990, filed 6/7/95, effective 7/8/95. Statutory Authority: RCW 43.70.250. 92-15-048 (Order 287), § 246-323-990, filed 7/10/92, effective 8/10/92. Statutory Authority: RCW 43.70.040. 91-02-050 (Order 122), § 246-323-990, filed 12/27/90, effective 1/31/91.] Repealed by 05-15-157, filed 7/20/05, effective 8/20/05. Statutory Authority: Chapter 71.12 RCW.

Reviser's note: Later promulgation, see chapter 246-337 WAC.

Chapter 246-325
ADULT RESIDENTIAL REHABILITATION CENTERS AND PRIVATE ADULT TREATMENT HOMES

246-325-001 Purpose. [Statutory Authority: RCW 43.70.040. 91-02-049 (Order 121), recodified as § 246-325-001, filed 12/27/90, effective 1/31/91. Statutory Authority: Chapter 71.12 RCW. 88-17-022 (Order 2668), § 248-25-001, filed 8/9/88; 82-17-009 (Order 1858), § 248-25-001, filed 8/6/82.] Repealed by 97-20-101, filed 9/29/97, effective 10/30/97. Statutory Authority: RCW 43.70.-040.

246-325-010 Definitions. [Statutory Authority: RCW 43.70.040 and chapter 71.12 RCW. 92-02-018 (Order 224), § 246-325-010, filed 12/23/91, effective 1/23/92. Statutory Authority: RCW 43.70.040. 91-02-049 (Order 121), recodified as § 246-325-010, filed 12/27/90, effective 1/31/91. Statutory Authority: Chapter 71.12 RCW. 88-17-022 (Order 2668), § 248-25-002, filed 8/9/88; 82-17-009 (Order 1858), § 248-25-002, filed 8/6/82.] Repealed by 05-15-157, filed 7/20/05, effective 8/20/05. Statutory Authority: Chapter 71.12 RCW. Later promulgation, see chapter 246-337 WAC.

246-325-012 Licensure—Adult residential rehabilitation centers and private adult treatment homes. [Statutory Authority: RCW 43.70.040, 34.05.220 and chapter 71.12 RCW. 92-02-018 (Order 224), § 246-325-012, filed 12/23/91, effective 1/23/92. Statutory Authority: RCW 43.70.-040. 91-02-049 (Order 121), recodified as § 246-325-012, filed 12/27/90, effective 1/31/91. Statutory Authority: Chapter 34.05 RCW, RCW 34.05.220 (1)(a) and 1989 1st ex.s. c 9 § 106. 90-06-019 (Order 039), § 248-25-010, filed 2/28/90, effective 3/1/90. Statutory Authority: Chapter 71.12 RCW. 88-17-022 (Order 2668), § 248-25-010, filed 8/9/88; 82-17-009 (Order 1858), § 248-25-010, filed 8/6/82.] Repealed by 05-15-157, filed 7/20/05, effective 8/20/05. Statutory Authority: Chapter 71.12 RCW. Later promulgation, see chapter 246-337 WAC.

246-325-015 Licensure—Private adult treatment home. [Statutory Authority: RCW 43.70.040 and chapter 71.12 RCW. 92-02-018 (Order 224), § 246-325-015, filed 12/23/91, effective 1/23/92. Statutory Authority: RCW 43.70.040. 91-02-049 (Order 121), recodified as § 246-325-015, filed 12/27/90, effective 1/31/91. Statutory Authority: Chapter 71.12 RCW. 82-17-009 (Order 1858), § 248-25-015, filed 8/6/82.] Repealed by 05-15-157, filed 7/20/05, effective 8/20/05. Statutory Authority: Chapter 71.12 RCW. Later promulgation, see chapter 246-337 WAC.

246-325-020 Administration—Adult residential rehabilitation center. [Statutory Authority: RCW 43.70.040. 91-02-049 (Order 121), recodified as § 246-325-020, filed 12/27/90, effective 1/31/91. Statutory Authority: Chapter 71.12 RCW. 88-17-022 (Order 2668), § 248-25-020, filed 8/9/88; 82-17-009 (Order 1858), § 248-25-020, filed 8/6/82.] Repealed by 05-15-157, filed 7/20/05, effective 8/20/05. Statutory Authority: Chapter 71.12 RCW. Later promulgation, see chapter 246-337 WAC.

246-325-022 Criminal history, disclosure, and background inquiries. [Statutory Authority: RCW 43.43.830 through 43.43.842. 93-16-030 (Order 381), § 246-325-022, filed 7/26/93, effective 8/26/93.] Repealed by 05-15-157, filed 7/20/05, effective 8/20/05. Statutory Authority: Chapter 71.12 RCW. Later promulgation, see chapter 246-337 WAC.

246-325-025 HIV/AIDS education and training. [Statutory Authority: RCW 43.70.040, 70.24.310 and chapter 71.12 RCW. 92-02-018 (Order 224), § 246-325-025, filed 12/23/91, effective 1/23/92. Statutory Authority: RCW 43.70.040. 91-02-049 (Order 121), recodified as § 246-325-025, filed 12/27/90, effective 1/31/91. Statutory Authority: RCW 70.24.310. 89-21-038 (Order 3), § 248-25-025, filed 10/12/89, effective 11/12/89.] Repealed by 05-15-157, filed 7/20/05, effective 8/20/05. Statutory Authority: Chapter 71.12 RCW. Later promulgation, see chapter 246-337 WAC.

246-325-030 Resident care services in adult residential rehabilitation centers or private adult treatment homes. [Statutory Authority: RCW 43.70.040 and chapter 71.12 RCW. 92-02-018 (Order 224), § 246-325-030, filed 12/23/91, effective 1/23/92. Statutory Authority: RCW 43.70.040. 91-02-049 (Order 121), recodified as § 246-325-030, filed 12/27/90, effective 1/31/91. Statutory Authority: Chapter 71.12 RCW. 88-17-022 (Order 2668), § 248-25-030, filed 8/9/88; 82-17-009 (Order 1858), § 248-25-030, filed 8/6/82.] Repealed by 05-15-157, filed 7/20/05, effective 8/20/05. Statutory Authority: Chapter 71.12 RCW. Later promulgation, see chapter 246-337 WAC.

246-325-035 General resident safety and care—Policies, procedures, practices. [Statutory Authority: RCW 43.70.040. 91-02-049 (Order 121), recodified as § 246-325-035, filed 12/27/90, effective 1/31/91. Statutory Authority: Chapter 71.12 RCW. 88-17-022 (Order 2668), § 248-25-035, filed 8/9/88.] Repealed by 05-15-157, filed 7/20/05, effective 8/20/05. Statutory Authority: Chapter 71.12 RCW. Later promulgation, see chapter 246-337 WAC.

246-325-040 Pharmaceutical services in adult residential rehabilitation centers. [Statutory Authority: RCW 43.70.040. 91-02-049 (Order 121), recodified as § 246-325-040, filed 12/27/90, effective 1/31/91. Statutory Authority: Chapter 71.12 RCW. 88-17-022 (Order 2668), § 248-25-040, filed 8/9/88; 82-17-009 (Order 1858), § 248-25-040, filed 8/6/82.] Repealed by 05-15-157, filed 7/20/05, effective 8/20/05. Statutory Authority: Chapter 71.12 RCW. Later promulgation, see chapter 246-337 WAC.

246-325-045 Food storage—Preparation—Service. [Statutory Authority: RCW 43.70.040 and chapter 71.12 RCW. 92-02-018 (Order 224), § 246-325-045, filed 12/23/91, effective 1/23/92. Statutory Authority: RCW 43.70.-

040. 91-02-049 (Order 121), recodified as § 246-325-045, filed 12/27/90, effective 1/31/91. Statutory Authority: Chapter 71.12 RCW. 88-17-022 (Order 2668), § 248-25-045, filed 8/9/88.] Repealed by 05-15-157, filed 7/20/05, effective 8/20/05. Statutory Authority: Chapter 71.12 RCW. Later promulgation, see chapter 246-337 WAC.

246-325-050 Infection control in adult residential rehabilitation centers. [Statutory Authority: RCW 43.70.040 and chapter 71.12 RCW. 92-02-018 (Order 224), § 246-325-050, filed 12/23/91, effective 1/23/92. Statutory Authority: RCW 43.70.040. 91-02-049 (Order 121), recodified as § 246-325-050, filed 12/27/90, effective 1/31/91. Statutory Authority: Chapter 71.12 RCW. 88-17-022 (Order 2668), § 248-25-050, filed 8/9/88; 82-17-009 (Order 1858), § 248-25-050, filed 8/6/82.] Repealed by 05-15-157, filed 7/20/05, effective 8/20/05. Statutory Authority: Chapter 71.12 RCW. Later promulgation, see chapter 246-337 WAC.

246-325-060 Clinical records. [Statutory Authority: RCW 43.70.040 and chapter 71.12 RCW. 92-02-018 (Order 224), § 246-325-060, filed 12/23/91, effective 1/23/92. Statutory Authority: RCW 43.70.040. 91-02-049 (Order 121), recodified as § 246-325-060, filed 12/27/90, effective 1/31/91. Statutory Authority: Chapter 71.12 RCW. 88-17-022 (Order 2668), § 248-25-060, filed 8/9/88; 82-17-009 (Order 1858), § 248-25-060, filed 8/6/82.] Repealed by 05-15-157, filed 7/20/05, effective 8/20/05. Statutory Authority: Chapter 71.12 RCW. Later promulgation, see chapter 246-337 WAC.

246-325-070 Physical environment in adult residential rehabilitation centers. [Statutory Authority: RCW 43.70.040 and chapter 71.12 RCW. 92-02-018 (Order 224), § 246-325-070, filed 12/23/91, effective 1/23/92. Statutory Authority: RCW 43.70.040. 91-02-049 (Order 121), recodified as § 246-325-070, filed 12/27/90, effective 1/31/91. Statutory Authority: Chapter 71.12 RCW. 88-17-022 (Order 2668), § 248-25-070, filed 8/9/88; 82-17-009 (Order 1858), § 248-25-070, filed 8/6/82.] Repealed by 05-15-157, filed 7/20/05, effective 8/20/05. Statutory Authority: Chapter 71.12 RCW. Later promulgation, see chapter 246-337 WAC.

246-325-100 Resident care services in private adult treatment homes. [Statutory Authority: RCW 43.70.040 and chapter 71.12 RCW. 92-02-018 (Order 224), § 246-325-100, filed 12/23/91, effective 1/23/92. Statutory Authority: RCW 43.70.040. 91-02-049 (Order 121), recodified as § 246-325-100, filed 12/27/90, effective 1/31/91. Statutory Authority: Chapter 71.12 RCW. 88-17-022 (Order 2668), § 248-25-100, filed 8/9/88; 82-17-009 (Order 1858), § 248-25-100, filed 8/6/82.] Repealed by 05-15-157, filed 7/20/05, effective 8/20/05. Statutory Authority: Chapter 71.12 RCW. Later promulgation, see chapter 246-337 WAC.

246-325-120 Physical environment requirements for private adult treatment homes. [Statutory Authority: RCW 43.70.-040. 91-02-049 (Order 121), recodified as § 246-325-120, filed 12/27/90, effective 1/31/91. Statutory Authority: Chapter 71.12 RCW. 88-17-022 (Order 2668), § 248-25-120, filed 8/9/88; 82-17-009 (Order 1858), § 248-25-120, filed 8/6/82.] Repealed by 05-15-157, filed 7/20/05, effective 8/20/05. Statutory Authority: Chapter 71.12 RCW. Later promulgation, see chapter 246-337 WAC.

246-325-990 Fees. [Statutory Authority: RCW 43.70.250, 18.46.030, 43.70.110, 71.12.470. 04-19-141, § 246-325-990, filed 9/22/04, effective 10/23/04. Statutory Authority: RCW 43.70.250 and 70.38.105(5). 03-22-020, § 246-325-990, filed 10/27/03, effective 11/27/03. Statutory Authority: RCW 43.70.250 and 2002 c 371. 02-20-040, § 246-325-990, filed 9/24/02, effective 11/1/02. Statutory Authority: RCW 71.12.470, 43.70.110 and 43.70.250. 01-15-091, § 246-325-990, filed 7/18/01, effective 8/18/01. Statutory Authority: RCW 71.12.470, 43.70.110, 43.70.250 and 43.208.020. 99-24-094, § 246-325-990, filed 11/30/99, effective 12/31/99. Statutory Authority: RCW 43.70.250, 43.70.110 and 43.20B.020. 95-12-097, § 246-325-990, filed 6/7/95, effective 7/8/95. Statutory Authority: RCW 43.70.250. 92-15-048 (Order 287), § 246-325-990, filed 7/10/92, effective 8/10/92. Statutory Authority: RCW 43.70.040. 91-02-050 (Order 122), § 246-325-990, filed 12/27/90, effective 1/31/91.] Repealed by 05-15-157, filed 7/20/05, effective 8/20/05. Statutory Authority: Chapter 71.12 RCW. Later promulgation, see chapter 246-337 WAC.

Chapter 246-326
ALCOHOLISM TREATMENT FACILITIES

246-326-001 Purpose. [Statutory Authority: RCW 43.70.040 and chapter 71.12 RCW. 92-02-018 (Order 224), § 246-326-001, filed 12/23/91, effective 1/23/92. Statutory Authority: RCW 43.70.040. 91-02-049 (Order 121), recodified as § 246-326-001, filed 12/27/90, effective 1/31/91. Statutory Authority: Chapter 71.12 RCW. 84-17-010 (Order 2130), § 248-26-001, filed 8/3/84. Formerly WAC 248-22-500.] Repealed by 97-20-101, filed 9/29/97, effective 10/30/97. Statutory Authority: RCW 43.70.040.

246-326-010 Definitions. [Statutory Authority: RCW 43.70.040 and chapter 71.12 RCW. 92-02-018 (Order 224), § 246-326-010, filed 12/23/91, effective 1/23/92. Statutory Authority: RCW 43.70.040. 91-02-049 (Order 121), recodified as § 246-326-010, filed 12/27/90, effective 1/31/91. Statutory Authority: Chapter 71.12 RCW. 84-17-010 (Order 2130), § 248-26-010, filed 8/3/84. Formerly WAC 248-22-501.] Repealed by 05-15-157, filed 7/20/05, effective 8/20/05. Statutory Authority: Chapter 71.12 RCW. Later promulgation, see chapter 246-337 WAC.

246-326-020 Licensure. [Statutory Authority: RCW 43.70.040, 34.05.220 and chapter 71.12 RCW. 92-02-018 (Order 224), § 246-326-020, filed 12/23/91, effective 1/23/92. Statutory Authority: RCW 43.70.040. 91-02-049 (Order 121), recodified as § 246-326-020, filed 12/27/90, effective 1/31/91. Statutory Authority: Chapter 34.05 RCW, RCW 34.05.220 (1)(a) and 1989 1st ex.s. c 9 § 106. 90-06-019 (Order 039), § 248-26-020, filed 2/28/90, effective 3/1/90. Statutory Authority: Chapter 71.12 RCW. 84-17-010 (Order 2130), § 248-26-020, filed 8/3/84. Formerly WAC 248-22-510.] Repealed by 05-15-157, filed 7/20/05, effective 8/20/05. Statutory Authority: Chapter 71.12 RCW. Later promulgation, see chapter 246-337 WAC.

246-326-030 Administrative management. [Statutory Authority: RCW 43.70.040 and chapter 71.12 RCW. 92-02-018 (Order 224), § 246-326-030, filed 12/23/91, effective 1/23/92. Statutory Authority: RCW 43.70.040. 91-02-049 (Order 121), recodified as § 246-326-030, filed 12/27/90, effective 1/31/91. Statutory Authority: Chapter 71.12 RCW. 84-17-010 (Order 2130), § 248-26-030, filed 8/3/84. Formerly WAC 248-22-520.] Repealed by 05-15-157, filed 7/20/05, effective 8/20/05. Statutory Authority: Chapter 71.12 RCW. Later promulgation, see chapter 246-337 WAC.

246-326-035 HIV/AIDS education and training. [Statutory Authority: RCW 43.70.040, 70.24.310 and chapter 71.12 RCW. 92-02-018 (Order 224), § 246-326-035, filed 12/23/91, effective 1/23/92. Statutory Authority: RCW 43.70.-040. 91-02-049 (Order 121), recodified as § 246-326-035, filed 12/27/90, effective 1/31/91. Statutory Authority: RCW 70.24.310. 89-21-038 (Order 3), § 248-26-035, filed 10/12/89, effective 11/12/89.] Repealed by 05-15-157, filed 7/20/05, effective 8/20/05. Statutory Authority: Chapter 71.12 RCW. Later promulgation, see chapter 246-337 WAC.

246-326-040 Patient care and services—General. [Statutory Authority: RCW 43.70.040 and chapter 71.12 RCW. 92-02-018 (Order 224), § 246-326-040, filed 12/23/91, effective 1/23/92. Statutory Authority: RCW 43.70.040. 91-02-049 (Order 121), recodified as § 246-326-040, filed 12/27/90, effective 1/31/91. Statutory Authority: Chapter 71.12 RCW. 84-17-010 (Order 2130), § 248-26-040, filed 8/3/84. Formerly WAC 248-22-530.] Repealed by 05-15-157, filed 7/20/05, effective 8/20/05. Statutory Authority: Chapter 71.12 RCW. Later promulgation, see chapter 246-337 WAC.

246-326-050 Health and medical care services—All facilities. [Statutory Authority: RCW 43.70.040 and chapter 71.12 RCW. 92-02-018 (Order 224), § 246-326-050, filed 12/23/91, effective 1/23/92. Statutory Authority: RCW 43.70.040. 91-02-049 (Order 121), recodified as § 246-326-050, filed 12/27/90, effective 1/31/91. Statutory Authority: Chapter 71.12 RCW. 84-17-010 (Order 2130), § 248-26-050, filed 8/3/84.] Repealed by 05-15-157, filed 7/20/05, effective 8/20/05. Statutory Authority: Chapter 71.12 RCW. Later promulgation, see chapter 246-337 WAC.

246-326-060 Medication responsibility—Administration of medications and treatments. [Statutory Authority: RCW 43.70.040 and chapter 71.12 RCW. 92-02-018 (Order 224), § 246-326-060, filed 12/23/91, effective 1/23/92. Statutory Authority: RCW 43.70.040. 91-02-049 (Order 121), recodified as § 246-326-060, filed 12/27/90, effective 1/31/91. Statutory Authority: Chapter 71.12 RCW. 84-17-010 (Order 2130), § 248-26-060, filed 8/3/84.] Repealed by 05-15-157, filed 7/20/05, effective 8/20/05. Statutory Authority: Chapter 71.12 RCW. Later promulgation, see chapter 246-337 WAC.

246-326-070 Maintenance and housekeeping—Laundry. [Statutory Authority: RCW 43.70.040. 91-02-049 (Order 121), recodified as § 246-326-070, filed 12/27/90, effective 1/31/91. Statutory Authority: Chapter 71.12 RCW. 84-17-010 (Order 2130), § 248-26-070, filed 8/3/84. Formerly WAC 248-22-540.] Repealed by 05-15-157, filed 7/20/05, effective 8/20/05. Statutory Authority: Chapter 71.12 RCW. Later promulgation, see chapter 246-337 WAC.

246-326-080 Site and grounds. [Statutory Authority: RCW 43.70.-040. 91-02-049 (Order 121), recodified as § 246-326-080, filed 12/27/90, effective 1/31/91. Statutory Authority: Chapter 71.12 RCW. 84-17-010 (Order 2130), § 248-26-080, filed 8/3/84. Formerly WAC 248-22-580.] Repealed by 05-15-157, filed 7/20/05, effective 8/20/05. Statutory Authority: Chapter 71.12 RCW. Later promulgation, see chapter 246-337 WAC.

246-326-090 Physical plant and equipment. [Statutory Authority: RCW 43.70.040 and chapter 71.12 RCW. 92-02-018 (Order 224), § 246-326-090, filed 12/23/91, effective 1/23/92. Statutory Authority: RCW 43.70.040. 91-02-049 (Order 121), recodified as § 246-326-090, filed 12/27/90, effective 1/31/91. Statutory Authority: Chapter 71.12 RCW. 84-17-010 (Order 2130), § 248-26-090, filed 8/3/84. Formerly WAC 248-22-590.] Repealed by 05-15-157, filed 7/20/05, effective 8/20/05. Statutory Authority: Chapter 71.12 RCW. Later promulgation, see chapter 246-337 WAC.

246-326-100 Special additional requirements for facilities providing alcoholism detoxification service. [Statutory Authority: RCW 43.70.040 and chapter 71.12 RCW. 92-02-018 (Order 224), § 246-326-100, filed 12/23/91, effective 1/23/92. Statutory Authority: RCW 43.70.040. 91-02-049 (Order 121), recodified as § 246-326-100, filed 12/27/90, effective 1/31/91. Statutory Authority: Chapter 71.12 RCW. 84-17-010 (Order 2130), § 248-26-100, filed 8/3/84. Formerly WAC 248-22-550.] Repealed by 05-15-157, filed 7/20/05, effective 8/20/05. Statutory Authority: Chapter 71.12 RCW. Later promulgation, see chapter 246-337 WAC.

246-326-990 Fees. [Statutory Authority: RCW 43.70.250, 18.46.030, 43.70.110, 71.12.470. 04-19-141, § 246-326-990, filed 9/22/04, effective 10/23/04. Statutory Authority: RCW 43.70.250 and 70.38.105(5). 03-22-020, § 246-326-990, filed 10/27/03, effective 11/27/03. Statutory Authority: RCW 43.70.250 and 2002 c 371. 02-20-040, § 246-326-990, filed 9/24/02, effective 11/1/02. Statutory Authority: RCW 71.12.470, 43.70.110 and 43.70.250. 01-15-091, § 246-326-990, filed 7/18/01, effective 8/18/01. Statutory Authority: RCW 71.12.470, 43.70.110, 43.70.250 and 43.208.020. 99-24-094, § 246-326-990, filed 11/30/99, effective 12/31/99. Statutory Authority: RCW 43.70.250, 43.70.110 and 43.20B.020. 95-12-097, § 246-326-990, filed 6/7/95, effective 7/8/95. Statutory Authority: RCW 43.70.250. 92-12-028 (Order 273), § 246-326-990, filed 5/28/92, effective 6/28/92. Statutory Authority: RCW 43.70.040. 91-02-050 (Order 122), § 246-326-990, filed 12/27/90, effective 1/31/91.] Repealed by 05-15-157, filed 7/20/05, effective 8/20/05. Statutory Authority: Chapter 71.12 RCW. Later promulgation, see chapter 246-337 WAC.

Chapter 246-327
HOME HEALTH AGENCIES

246-327-001 Scope and purpose. [Statutory Authority: RCW 70.127.120. 94-17-136, § 246-327-001, filed 8/22/94, effective 9/22/94. Statutory Authority: RCW 43.70.040. 91-02-049 (Order 121), recodified as § 246-327-001, filed 12/27/90, effective 1/31/91. Statutory Authority: RCW 70.126.040. 89-12-077 (Order 2790), § 248-27-005, filed 6/7/89.] Repealed by 97-20-101, filed 9/29/97, effective 10/30/97. Statutory Authority: RCW 43.70.040.

246-327-010 Definitions. [Statutory Authority: RCW 70.127.120. 94-17-136, § 246-327-010, filed 8/22/94, effective 9/22/94. Statutory Authority: RCW 70.127.120 and 70.127.250. 92-02-018 (Order 224), § 246-327-010, filed 12/23/91, effective 1/23/92. Statutory Authority: RCW 43.70.040. 91-02-049 (Order 121), recodified as § 246-327-010, filed 12/27/90, effective 1/31/91. Statutory Authority: RCW 70.126.040. 89-12-077 (Order 2790), § 248-27-015, filed 6/7/89.] Repealed by 02-18-026, filed 8/23/02, effective 10/1/02. Statutory Authority: Chapter 70.127 RCW.

246-327-025 Licensure—Initial, renewal, transfer. [Statutory Authority: RCW 70.127.120. 94-17-136, § 246-327-025, filed 8/22/94, effective 9/22/94. Statutory Authority: RCW 70.127.120 and 70.127.250. 92-02-018 (Order 224), § 246-327-025, filed 12/23/91, effective 1/23/92. Statutory Authority: RCW 43.70.040. 91-02-049 (Order 121), recodified as § 246-327-025, filed 12/27/90, effective 1/31/91. Statutory Authority: Chapter 34.05 RCW, RCW 34.05.220 (1)(a) and 70.126.040. 90-06-019 (Order 039), § 248-27-025, filed 2/28/90, effective 3/1/90. Statutory Authority: RCW 70.126.040. 89-12-077 (Order 2790), § 248-27-025, filed 6/7/89.] Repealed by 02-18-026, filed 8/23/02, effective 10/1/02. Statutory Authority: Chapter 70.127 RCW.

246-327-030 Deemed status. [Statutory Authority: RCW 70.127.120. 94-17-136, § 246-327-030, filed 8/22/94, effective 9/22/94.] Repealed by 02-18-026, filed 8/23/02, effective 10/1/02. Statutory Authority: Chapter 70.127 RCW.

246-327-035 Responsibilities and rights—Licensee and department. [Statutory Authority: RCW 70.127.120. 94-17-136, § 246-327-035, filed 8/22/94, effective 9/22/94. Statutory Authority: RCW 70.127.120, 70.127.250 and 34.05.-220. 92-02-018 (Order 224), § 246-327-035, filed 12/23/91, effective 1/23/92. Statutory Authority: RCW 43.70.040. 91-02-049 (Order 121), recodified as § 246-327-035, filed 12/27/90, effective 1/31/91. Statutory Authority: Chapter 34.05 RCW, RCW 34.05.220 (1)(a) and 70.126.040. 90-06-019 (Order 039), § 248-27-035, filed 2/28/90, effective 3/1/90. Statutory Authority: RCW 70.126.040. 89-12-077 (Order 2790), § 248-27-035, filed 6/7/89.] Repealed by 02-18-026, filed 8/23/02, effective 10/1/02. Statutory Authority: Chapter 70.127 RCW.

246-327-045 Civil fines. [Statutory Authority: RCW 43.70.040. 91-02-049 (Order 121), recodified as § 246-327-045, filed 12/27/90, effective 1/31/91. Statutory Authority: Chapter 34.05 RCW, RCW 34.05.220 (1)(a) and 70.126.040. 90-06-019 (Order 039), § 248-27-045, filed 2/28/90, effective 3/1/90. Statutory Authority: RCW 70.126.-040. 89-12-077 (Order 2790), § 248-27-045, filed 6/7/89.] Repealed by 94-17-136, filed 8/22/94, effective 9/22/94. Statutory Authority: RCW 70.127.120.

246-327-055 License action and/or civil fine—Notice—Adjudicative proceeding. [Statutory Authority: RCW 70.127.120, 70.127.250 and 34.05.220. 92-02-018 (Order 224), § 246-327-055, filed 12/23/91, effective 1/23/92. Statutory Authority: RCW 43.70.040. 91-02-049 (Order 121), recodified as § 246-327-055, filed 12/27/90, effective 1/31/91. Statutory Authority: Chapter 34.05 RCW, RCW 34.05.220 (1)(a) and 70.126.040. 90-06-019 (Order 039), § 248-27-055, filed 2/28/90, effective 3/1/90. Statutory Authority: RCW 70.126.040. 89-12-077 (Order 2790), § 248-27-055, filed 6/7/89.] Repealed by 94-17-136, filed 8/22/94, effective 9/22/94. Statutory Authority: RCW 70.127.120.

246-327-065 General requirements. [Statutory Authority: RCW 70.127.120. 94-17-136, § 246-327-065, filed 8/22/94, effective 9/22/94. Statutory Authority: RCW 43.70.-040. 91-02-049 (Order 121), recodified as § 246-327-065, filed 12/27/90, effective 1/31/91. Statutory Authority: RCW 70.126.040. 89-12-077 (Order 2790), § 248-27-065, filed 6/7/89.] Repealed by 02-18-026, filed 8/23/02, effective 10/1/02. Statutory Authority: Chapter 70.127 RCW.

246-327-077 Patient bill of rights. [Statutory Authority: RCW 70.127.120. 94-17-136, § 246-327-077, filed 8/22/94, effective 9/22/94. Statutory Authority: RCW 43.70.-040. 91-02-049 (Order 121), recodified as § 246-327-077, filed 12/27/90, effective 1/31/91. Statutory Authority: RCW 70.126.040. 89-12-077 (Order 2790), § 248-27-077, filed 6/7/89.] Repealed by 02-18-026, filed

8/23/02, effective 10/1/02. Statutory Authority: Chapter 70.127 RCW.

246-327-085 Organization and administration. [Statutory Authority: RCW 70.127.120. 94-17-136, § 246-327-085, filed 8/22/94, effective 9/22/94. Statutory Authority: RCW 43.70.040. 91-02-049 (Order 121), recodified as § 246-327-085, filed 12/27/90, effective 1/31/91. Statutory Authority: RCW 70.126.040. 89-12-077 (Order 2790), § 248-27-085, filed 6/7/89.] Repealed by 02-18-026, filed 8/23/02, effective 10/1/02. Statutory Authority: Chapter 70.127 RCW.

246-327-090 Criminal history, disclosure, and background inquiries. [Statutory Authority: RCW 70.127.120. 94-17-136, § 246-327-090, filed 8/22/94, effective 9/22/94. Statutory Authority: RCW 43.43.830 through 43.43.842. 93-16-030 (Order 381), § 246-327-090, filed 7/26/93, effective 8/26/93.] Repealed by 02-18-026, filed 8/23/02, effective 10/1/02. Statutory Authority: Chapter 70.127 RCW.

246-327-095 Personnel, contractors and volunteers. [Statutory Authority: RCW 70.127.120. 94-17-136, § 246-327-095, filed 8/22/94, effective 9/22/94. Statutory Authority: RCW 43.70.040. 91-02-049 (Order 121), recodified as § 246-327-095, filed 12/27/90, effective 1/31/91. Statutory Authority: RCW 70.126.040. 89-12-077 (Order 2790), § 248-27-095, filed 6/7/89.] Repealed by 02-18-026, filed 8/23/02, effective 10/1/02. Statutory Authority: Chapter 70.127 RCW.

246-327-105 HIV/AIDS education and training. [Statutory Authority: RCW 70.127.120. 94-17-136, § 246-327-105, filed 8/22/94, effective 9/22/94. Statutory Authority: RCW 70.127.120, 70.127.250 and 70.24.310. 92-02-018 (Order 224), § 246-327-105, filed 12/23/91, effective 1/23/92. Statutory Authority: RCW 43.70.040. 91-02-049 (Order 121), recodified as § 246-327-105, filed 12/27/90, effective 1/31/91. Statutory Authority: RCW 70.126.040. 89-12-077 (Order 2790), § 248-27-105, filed 6/7/89.] Repealed by 02-18-026, filed 8/23/02, effective 10/1/02. Statutory Authority: Chapter 70.127 RCW.

246-327-115 Patient care policies and procedures. [Statutory Authority: RCW 70.127.120. 94-17-136, § 246-327-115, filed 8/22/94, effective 9/22/94. Statutory Authority: RCW 43.70.040. 91-02-049 (Order 121), recodified as § 246-327-115, filed 12/27/90, effective 1/31/91. Statutory Authority: RCW 70.126.040. 89-12-077 (Order 2790), § 248-27-115, filed 6/7/89.] Repealed by 02-18-026, filed 8/23/02, effective 10/1/02. Statutory Authority: Chapter 70.127 RCW.

246-327-125 Supervision and coordination of patient services. [Statutory Authority: RCW 70.127.120. 94-17-136, § 246-327-125, filed 8/22/94, effective 9/22/94. Statutory Authority: RCW 43.70.040. 91-02-049 (Order 121), recodified as § 246-327-125, filed 12/27/90, effective 1/31/91. Statutory Authority: RCW 70.126.040. 89-12-077 (Order 2790), § 248-27-125, filed 6/7/89.] Repealed by 02-18-026, filed 8/23/02, effective 10/1/02. Statutory Authority: Chapter 70.127 RCW.

246-327-135 Home health plan of treatment. [Statutory Authority: RCW 70.127.120. 94-17-136, § 246-327-135, filed 8/22/94, effective 9/22/94. Statutory Authority: RCW 43.70.040. 91-02-049 (Order 121), recodified as § 246-327-135, filed 12/27/90, effective 1/31/91. Statutory Authority: RCW 70.126.040. 89-12-077 (Order 2790), § 248-27-135, filed 6/7/89.] Repealed by 02-18-026, filed 8/23/02, effective 10/1/02. Statutory Authority: Chapter 70.127 RCW.

246-327-145 Home health plan of care. [Statutory Authority: RCW 70.127.120. 94-17-136, § 246-327-145, filed 8/22/94, effective 9/22/94. Statutory Authority: RCW 43.70.040. 91-02-049 (Order 121), recodified as § 246-327-145, filed 12/27/90, effective 1/31/91. Statutory Authority: RCW 70.126.040. 89-12-077 (Order 2790), § 248-27-145, filed 6/7/89.] Repealed by 02-18-026, filed 8/23/02, effective 10/1/02. Statutory Authority: Chapter 70.127 RCW.

246-327-155 Functions, duties, and responsibilities of direct care personnel. [Statutory Authority: RCW 70.127.120 and 70.127.250. 92-02-018 (Order 224), § 246-327-155, filed 12/23/91, effective 1/23/92. Statutory Authority: RCW 43.70.040. 91-02-049 (Order 121), recodified as § 246-327-155, filed 12/27/90, effective 1/31/91. Statutory Authority: RCW 70.126.040. 89-12-077 (Order 2790), § 248-27-155, filed 6/7/89.] Repealed by 94-17-136, filed 8/22/94, effective 9/22/94. Statutory Authority: RCW 70.127.120.

246-327-165 Clinical records. [Statutory Authority: RCW 70.127.-120. 94-17-136, § 246-327-165, filed 8/22/94, effective 9/22/94. Statutory Authority: RCW 43.70.040. 91-02-049 (Order 121), recodified as § 246-327-165, filed 12/27/90, effective 1/31/91. Statutory Authority: RCW 70.126.040. 89-12-077 (Order 2790), § 248-27-165, filed 6/7/89.] Repealed by 02-18-026, filed 8/23/02, effective 10/1/02. Statutory Authority: Chapter 70.127 RCW.

246-327-175 Parenteral product services. [Statutory Authority: RCW 43.70.040. 91-02-049 (Order 121), recodified as § 246-327-175, filed 12/27/90, effective 1/31/91. Statutory Authority: RCW 70.126.040. 89-12-077 (Order 2790), § 248-27-175, filed 6/7/89.] Repealed by 94-17-136, filed 8/22/94, effective 9/22/94. Statutory Authority: RCW 70.127.120.

246-327-185 Medical supplies—Equipment services. [Statutory Authority: RCW 70.127.120. 94-17-136, § 246-327-185, filed 8/22/94, effective 9/22/94. Statutory Authority: RCW 43.70.040. 91-02-049 (Order 121), recodified as § 246-327-185, filed 12/27/90, effective 1/31/91. Statutory Authority: RCW 70.126.040. 89-12-077 (Order 2790), § 248-27-185, filed 6/7/89.] Repealed by 02-18-026, filed 8/23/02, effective 10/1/02. Statutory Authority: Chapter 70.127 RCW.

246-327-990 Fees. [Statutory Authority: RCW 70.127.090, 43.20B.-110, 43.70.250. 01-22-062, § 246-327-990, filed 11/1/01, effective 12/2/01. Statutory Authority: RCW 70.127.090, 43.02B.020 [43.20B.020], 43.70.110 and 43.70.250. 98-13-036, § 246-327-990, filed 6/8/98, effective 7/9/98. Statutory Authority: RCW 43.70.110, 43.70.250 and 70.127.090. 97-15-096, § 246-327-990, filed 7/21/97, effective 8/21/97. Statutory Authority: RCW 43.70.110 and 43.70.250. 96-12-026, § 246-327-990, filed 5/30/96, effective 6/30/96. Statutory Authority: RCW 43.70.250, 43.70.110 and 43.20B.020. 95-12-097, § 246-327-990, filed 6/7/95, effective 7/8/95. Statutory Authority: RCW 70.127.120. 94-17-136, § 246-327-990, filed 8/22/94, effective 9/22/94. Statutory Authority: RCW 70.127.120 and 70.127.090. 93-21-034, § 246-327-990, filed 10/15/93, effective 10/28/93. Statutory Authority: RCW 43.70.250. 92-15-084 (Order 288), § 246-327-990, filed 7/16/92, effective 8/16/92. Statutory Authority: RCW 43.70.040. 91-02-050 (Order 122), § 246-327-990, filed 12/27/90, effective 1/31/91.] Repealed by 02-18-026, filed 8/23/02, effective 10/1/02. Statutory Authority: Chapter 70.127 RCW.

Reviser's note: Later promulgation, see chapter 246-335 WAC.

Chapter 246-328
ADULT FAMILY HOME RESIDENT MANAGERS AND PROVIDERS

246-328-100 Registration. [Statutory Authority: Chapter 18.48 RCW. 96-14-070, § 246-328-100, filed 6/28/96, effective 7/1/96.] Repealed by 98-05-060, filed 2/13/98, effective 3/16/98. Statutory Authority: RCW 43.70.-280.

246-328-150 Responsibility for maintaining mailing address on file with the department. [Statutory Authority: Chapter 18.48 RCW. 96-14-070, § 246-328-150, filed 6/28/96, effective 7/1/96.] Repealed by 97-20-101, filed 9/29/97, effective 10/30/97. Statutory Authority: RCW 43.70.-040.

246-328-200 HIV/AIDS prevention and information education requirements. [Statutory Authority: RCW 43.70.280. 98-05-060, § 246-328-200, filed 2/13/98, effective 3/16/98. Statutory Authority: Chapter 18.48 RCW. 96-14-070, § 246-328-200, filed 6/28/96, effective 7/1/96.] Repealed by 02-20-078, filed 9/30/02, effective 10/31/02. Statutory Authority: 2002 c 223.

246-328-990 Adult family home provider or resident manager fees and renewal cycle. [Statutory Authority: RCW 43.70.-280. 98-05-060, § 246-328-990, filed 2/13/98, effective 3/16/98. Statutory Authority: Chapter 18.48 RCW. 96-14-070, § 246-328-990, filed 6/28/96, effective 7/1/96.] Repealed by 02-20-078, filed 9/30/02, effective 10/31/02. Statutory Authority: 2002 c 223.

Chapter 246-331
HOSPICE AGENCIES

246-331-001 Purpose and scope. [Statutory Authority: RCW 70.127.120. 94-17-138, § 246-331-001, filed 8/22/94, effective 9/22/94. Statutory Authority: RCW 43.70.-040. 91-02-049 (Order 121), recodified as § 246-331-001, filed 12/27/90, effective 1/31/91. Statutory Authority: RCW 70.126.040. 89-12-077 (Order 2790), § 248-31-005, filed 6/7/89.] Repealed by 97-20-101, filed 9/29/97, effective 10/30/97. Statutory Authority: RCW 43.70.040.

246-331-010 Definitions. [Statutory Authority: RCW 70.127.120. 94-17-138, § 246-331-010, filed 8/22/94, effective 9/22/94. Statutory Authority: RCW 70.127.120 and 70.127.260. 92-02-018 (Order 224), § 246-331-010, filed 12/23/91, effective 1/23/92. Statutory Authority: RCW 43.70.040. 91-02-049 (Order 121), recodified as § 246-331-010, filed 12/27/90, effective 1/31/91. Statutory Authority: RCW 70.126.040. 89-12-077 (Order 2790), § 248-31-015, filed 6/7/89.] Repealed by 02-18-026, filed 8/23/02, effective 10/1/02. Statutory Authority: Chapter 70.127 RCW.

246-331-025 Licensure—Initial, renewal, transfer. [Statutory Authority: RCW 70.127.120. 94-17-138, § 246-331-025, filed 8/22/94, effective 9/22/94. Statutory Authority: RCW 70.127.120 and 70.127.260. 92-02-018 (Order 224), § 246-331-025, filed 12/23/91, effective 1/23/92. Statutory Authority: RCW 43.70.040. 91-02-049 (Order 121), recodified as § 246-331-025, filed 12/27/90, effective 1/31/91. Statutory Authority: Chapter 34.05 RCW, RCW 34.05.220 (1)(a) and 70.126.040. 90-06-019 (Order 039), § 248-31-025, filed 2/28/90, effective 3/1/90. Statutory Authority: RCW 70.126.040. 89-12-077 (Order 2790), § 248-31-025, filed 6/7/89.] Repealed by 02-18-026, filed 8/23/02, effective 10/1/02. Statutory Authority: Chapter 70.127 RCW.

246-331-030 Deemed status. [Statutory Authority: RCW 70.127.120. 94-17-138, § 246-331-030, filed 8/22/94, effective 9/22/94.] Repealed by 02-18-026, filed 8/23/02, effective 10/1/02. Statutory Authority: Chapter 70.127 RCW.

246-331-035 Responsibilities and rights—Licensee and department. [Statutory Authority: RCW 70.127.120. 94-17-138, § 246-331-035, filed 8/22/94, effective 9/22/94. Statutory Authority: RCW 70.127.120, 70.127.260 and 34.05.-220. 92-02-018 (Order 224), § 246-331-035, filed 12/23/91, effective 1/23/92. Statutory Authority: RCW 43.70.040. 91-02-049 (Order 121), recodified as § 246-331-035, filed 12/27/90, effective 1/31/91. Statutory Authority: Chapter 34.05 RCW, RCW 34.05.220 (1)(a) and 70.126.040. 90-06-019 (Order 039), § 248-31-035, filed 2/28/90, effective 3/1/90. Statutory Authority: RCW 70.126.040. 89-12-077 (Order 2790), § 248-31-035, filed 6/7/89.] Repealed by 02-18-026, filed 8/23/02, effective 10/1/02. Statutory Authority: Chapter 70.127 RCW.

246-331-045 Civil fines. [Statutory Authority: RCW 43.70.040. 91-02-049 (Order 121), recodified as § 246-331-045, filed 12/27/90, effective 1/31/91. Statutory Authority: Chapter 34.05 RCW, RCW 34.05.220 (1)(a) and 70.126.040. 90-06-019 (Order 039), § 248-31-045, filed 2/28/90, effective 3/1/90. Statutory Authority: RCW 70.126.040. 89-12-077 (Order 2790), § 248-31-045, filed 6/7/89.] Repealed by 94-17-138, filed 8/22/94, effective 9/22/94. Statutory Authority: RCW 70.127.-120.

246-331-055 License action and/or civil fine—Notice—Adjudicative proceeding. [Statutory Authority: RCW 70.127.120, 70.127.260 and 34.05.220. 92-02-018 (Order 224), § 246-331-055, filed 12/23/91, effective 1/23/92. Statutory Authority: RCW 43.70.040. 91-02-049 (Order 121), recodified as § 246-331-055, filed 12/27/90, effective 1/31/91. Statutory Authority: Chapter 34.05 RCW, RCW 34.05.220 (1)(a) and 70.126.040. 90-06-019 (Order 039), § 248-31-055, filed 2/28/90, effective 3/1/90. Statutory Authority: RCW 70.126.040. 89-12-077 (Order 2790), § 248-31-055, filed 6/7/89.] Repealed by 94-17-138, filed 8/22/94, effective 9/22/94. Statutory Authority: RCW 70.127.120.

246-331-065 General requirements. [Statutory Authority: RCW 70.127.120. 94-17-138, § 246-331-065, filed 8/22/94, effective 9/22/94. Statutory Authority: RCW 43.70.-040. 91-02-049 (Order 121), recodified as § 246-331-065, filed 12/27/90, effective 1/31/91. Statutory Authority: RCW 70.126.040. 89-12-077 (Order 2790), § 248-31-065, filed 6/7/89.] Repealed by 02-18-026, filed 8/23/02, effective 10/1/02. Statutory Authority: Chapter 70.127 RCW.

246-331-077 Patient bill of rights. [Statutory Authority: RCW 70.127.120. 94-17-138, § 246-331-077, filed 8/22/94, effective 9/22/94. Statutory Authority: RCW 43.70.-040. 91-02-049 (Order 121), recodified as § 246-331-077, filed 12/27/90, effective 1/31/91. Statutory Authority: RCW 70.126.040. 89-12-077 (Order 2790), § 248-31-077, filed 6/7/89.] Repealed by 02-18-026, filed 8/23/02, effective 10/1/02. Statutory Authority: Chapter 70.127 RCW.

246-331-085 Organization and administration. [Statutory Authority: RCW 70.127.120. 94-17-138, § 246-331-085, filed 8/22/94, effective 9/22/94. Statutory Authority: RCW 43.70.040. 91-02-049 (Order 121), recodified as § 246-331-085, filed 12/27/90, effective 1/31/91. Statutory Authority: RCW 70.126.040. 89-12-077 (Order 2790), § 248-31-085, filed 6/7/89.] Repealed by 02-18-026, filed 8/23/02, effective 10/1/02. Statutory Authority: Chapter 70.127 RCW.

246-331-095 Personnel, contractors and volunteers. [Statutory Authority: RCW 70.127.120. 94-17-138, § 246-331-095, filed 8/22/94, effective 9/22/94. Statutory Authority: RCW 43.70.040. 91-02-049 (Order 121), recodified as § 246-331-095, filed 12/27/90, effective 1/31/91. Statutory Authority: RCW 70.126.040. 89-12-077 (Order 2790), § 248-31-095, filed 6/7/89.] Repealed by 02-18-026, filed 8/23/02, effective 10/1/02. Statutory Authority: Chapter 70.127 RCW.

246-331-100 Criminal history, disclosure, and background inquiries. [Statutory Authority: RCW 70.127.120. 94-17-138, § 246-331-100, filed 8/22/94, effective 9/22/94. Statutory Authority: RCW 43.43.830 through 43.43.842. 93-16-030 (Order 381), § 246-331-100, filed 7/26/93, effective 8/26/93.] Repealed by 02-18-026, filed 8/23/02, effective 10/1/02. Statutory Authority: Chapter 70.127 RCW.

246-331-105 AIDS education and training. [Statutory Authority: RCW 70.127.120. 94-17-138, § 246-331-105, filed 8/22/94, effective 9/22/94. Statutory Authority: RCW 70.127.120, 70.127.260 and 70.24.310. 92-02-018 (Order 224), § 246-331-105, filed 12/23/91, effective 1/23/92. Statutory Authority: RCW 43.70.040. 91-02-049 (Order 121), recodified as § 246-331-105, filed 12/27/90, effective 1/31/91. Statutory Authority: RCW 70.126.040. 89-12-077 (Order 2790), § 248-31-105, filed 6/7/89.] Repealed by 02-18-026, filed 8/23/02, effective 10/1/02. Statutory Authority: Chapter 70.127 RCW.

246-331-115 Patient care policies and procedures. [Statutory Authority: RCW 70.127.120. 94-17-138, § 246-331-115, filed 8/22/94, effective 9/22/94. Statutory Authority: RCW 43.70.040. 91-02-049 (Order 121), recodified as § 246-331-115, filed 12/27/90, effective 1/31/91. Statutory Authority: RCW 70.126.040. 89-12-077 (Order 2790), § 248-31-115, filed 6/7/89.] Repealed by 02-18-026, filed 8/23/02, effective 10/1/02. Statutory Authority: Chapter 70.127 RCW.

246-331-125 Supervision and coordination of patient services. [Statutory Authority: RCW 70.127.120. 94-17-138, § 246-331-125, filed 8/22/94, effective 9/22/94. Statutory Authority: RCW 43.70.040. 91-02-049 (Order 121), recodified as § 246-331-125, filed 12/27/90, effective 1/31/91. Statutory Authority: RCW 70.126.040. 89-12-077 (Order 2790), § 248-31-125, filed 6/7/89.] Repealed by 02-18-026, filed 8/23/02, effective 10/1/02. Statutory Authority: Chapter 70.127 RCW.

246-331-135 Hospice plan of care. [Statutory Authority: RCW 70.127.120. 94-17-138, § 246-331-135, filed 8/22/94, effective 9/22/94. Statutory Authority: RCW 43.70.-040. 91-02-049 (Order 121), recodified as § 246-331-135, filed 12/27/90, effective 1/31/91. Statutory Authority: RCW 70.126.040. 89-12-077 (Order 2790), § 248-31-135, filed 6/7/89.] Repealed by 02-18-026, filed 8/23/02, effective 10/1/02. Statutory Authority: Chapter 70.127 RCW.

246-331-155 Functions, duties, and responsibilities of direct care personnel. [Statutory Authority: RCW 70.127.120 and 70.127.260. 92-02-018 (Order 224), § 246-331-155, filed 12/23/91, effective 1/23/92. Statutory Authority: RCW 43.70.040. 91-02-049 (Order 121), recodified as § 246-331-155, filed 12/27/90, effective 1/31/91. Statu-

tory Authority: RCW 70.126.040. 89-12-077 (Order 2790), § 248-31-155, filed 6/7/89.] Repealed by 94-17-138, filed 8/22/94, effective 9/22/94. Statutory Authority: RCW 70.127.120.

246-331-165 Clinical records. [Statutory Authority: RCW 70.127.-120. 94-17-138, § 246-331-165, filed 8/22/94, effective 9/22/94. Statutory Authority: RCW 43.70.040. 91-02-049 (Order 121), recodified as § 246-331-165, filed 12/27/90, effective 1/31/91. Statutory Authority: RCW 70.126.040. 89-12-077 (Order 2790), § 248-31-165, filed 6/7/89.] Repealed by 02-18-026, filed 8/23/02, effective 10/1/02. Statutory Authority: Chapter 70.127 RCW.

246-331-175 Parenteral product services. [Statutory Authority: RCW 43.70.040. 91-02-049 (Order 121), recodified as § 246-331-175, filed 12/27/90, effective 1/31/91. Statutory Authority: RCW 70.126.040. 89-12-077 (Order 2790), § 248-31-175, filed 6/7/89.] Repealed by 94-17-138, filed 8/22/94, effective 9/22/94. Statutory Authority: RCW 70.127.120.

246-331-185 Medical supplies—Equipment services. [Statutory Authority: RCW 70.127.120. 94-17-138, § 246-331-185, filed 8/22/94, effective 9/22/94. Statutory Authority: RCW 43.70.040. 91-02-049 (Order 121), recodified as § 246-331-185, filed 12/27/90, effective 1/31/91. Statutory Authority: RCW 70.126.040. 89-12-077 (Order 2790), § 248-31-185, filed 6/7/89.] Repealed by 02-18-026, filed 8/23/02, effective 10/1/02. Statutory Authority: Chapter 70.127 RCW.

246-331-990 Fees. [Statutory Authority: RCW 70.127.090, 43.20B.-110, 43.70.250. 01-22-062, § 246-331-990, filed 11/1/01, effective 12/2/01. Statutory Authority: RCW 70.127.090, 43.02B.020 [43.20B.020], 43.70.110 and 43.70.250. 98-13-036, § 246-331-990, filed 6/8/98, effective 7/9/98. Statutory Authority: RCW 43.70.110, 43.70.250 and 70.127.090. 97-15-096, § 246-331-990, filed 7/21/97, effective 8/21/97. Statutory Authority: RCW 43.70.110 and 43.70.250. 96-12-025, § 246-331-990, filed 5/30/96, effective 6/30/96. Statutory Authority: RCW 43.70.250, 43.70.110 and 43.20B.020. 95-12-097, § 246-331-990, filed 6/7/95, effective 7/8/95. Statutory Authority: RCW 70.127.120. 94-17-138, § 246-331-990, filed 8/22/94, effective 9/22/94. Statutory Authority: RCW 70.127.120 and 70.127.090. 93-21-034, § 246-331-990, filed 10/15/93, effective 10/28/93. Statutory Authority: RCW 43.70.250. 92-15-084 (Order 288), § 246-331-990, filed 7/16/92, effective 8/16/92. Statutory Authority: RCW 43.70.040. 91-02-050 (Order 122), § 246-331-990, filed 12/27/90, effective 1/31/91.] Repealed by 02-18-026, filed 8/23/02, effective 10/1/02. Statutory Authority: Chapter 70.127 RCW.

Reviser's note: Later promulgation, see chapter 246-335 WAC.

Chapter 246-333
APPROVAL OF EYE BANKS

246-333-010 Definitions. [Statutory Authority: RCW 43.70.040 and 68.50.280. 92-02-018 (Order 224), § 246-333-010, filed 12/23/91, effective 1/23/92. Statutory Authority: RCW 43.70.040. 91-02-049 (Order 121), recodified as § 246-333-010, filed 12/27/90, effective 1/31/91; Order 134, § 248-33-020, filed 10/21/76.] Repealed by 02-15-164, filed 7/23/02, effective 8/23/02. Statutory Authority: RCW 68.50.630.

246-333-020 Approval process. [Statutory Authority: RCW 43.70.-040, 68.50.280 and 34.05.220. 92-02-018 (Order 224), § 246-333-020, filed 12/23/91, effective 1/23/92. Statutory Authority: RCW 43.70.040. 91-02-049 (Order 121), recodified as § 246-333-020, filed 12/27/90, effective 1/31/91. Statutory Authority: RCW 43.20.050 and chapter 34.05 RCW. 90-05-038 (Order 034), § 248-33-040, filed 2/14/90, effective 3/17/90; Order 134, § 248-33-040, filed 10/21/76.] Repealed by 02-15-164, filed 7/23/02, effective 8/23/02. Statutory Authority: RCW 68.50.630.

246-333-030 HIV/AIDS education and training. [Statutory Authority: RCW 43.70.040, 68.50.280 and 70.24.310. 92-02-018 (Order 224), § 246-333-030, filed 12/23/91, effective 1/23/92. Statutory Authority: RCW 43.70.040. 91-02-049 (Order 121), recodified as § 246-333-030, filed 12/27/90, effective 1/31/91. Statutory Authority: RCW 70.24.310. 89-21-038 (Order 3), § 248-33-090, filed 10/12/89, effective 11/12/89.] Repealed by 02-15-164, filed 7/23/02, effective 8/23/02. Statutory Authority: RCW 68.50.630.

246-333-040 Records. [Statutory Authority: RCW 43.70.040. 91-02-049 (Order 121), recodified as § 246-333-040, filed 12/27/90, effective 1/31/91. Statutory Authority: RCW 43.20.050. 78-03-060 (Order 156), § 248-33-100, filed 2/22/78; Order 134, § 248-33-100, filed 10/21/76.] Repealed by 02-15-164, filed 7/23/02, effective 8/23/02. Statutory Authority: RCW 68.50.630.

Chapter 246-334
DISPOSITION OF HUMAN REMAINS

246-334-010 Definitions. [Statutory Authority: RCW 43.20.050. 91-02-051 (Order 124B), recodified as § 246-334-010, filed 12/27/90, effective 1/31/91; Regulation .112.010, filed 2/18/66.] Repealed by 92-02-019 (Order 225B), filed 12/23/91, effective 1/23/92. Statutory Authority: RCW 43.20.050.

246-334-020 Approval required for tissue preservation. [Statutory Authority: RCW 43.20.050. 91-02-051 (Order 124B), recodified as § 246-334-020, filed 12/27/90, effective 1/31/91; Regulation .112.020, filed 2/18/66.] Repealed by 92-02-019 (Order 225B), filed 12/23/91, effective 1/23/92. Statutory Authority: RCW 43.20.050.

246-334-030 Approval required for tissue preservation—Provisions for approval. [Statutory Authority: RCW 43.20.050. 91-02-051 (Order 124B), recodified as § 246-334-030, filed 12/27/90, effective 1/31/91; Regulation .112.030, filed 2/18/66.] Repealed by 92-02-019 (Order 225B), filed 12/23/91, effective 1/23/92. Statutory Authority: RCW 43.20.050.

246-334-040 Approval required for tissue preservation—Exemptions from approval. [Statutory Authority: RCW 43.20.050. 91-02-051 (Order 124B), recodified as § 246-334-040, filed 12/27/90, effective 1/31/91; Regulation .112.040, filed 2/18/66.] Repealed by 92-02-019 (Order 225B), filed 12/23/91, effective 1/23/92. Statutory Authority: RCW 43.20.050.

246-334-050 Records. [Statutory Authority: RCW 43.20.050. 91-02-051 (Order 124B), recodified as § 246-334-050, filed 12/27/90, effective 1/31/91; Regulation .112.050, filed 2/18/66.] Repealed by 92-02-019 (Order 225B), filed 12/23/91, effective 1/23/92. Statutory Authority: RCW 43.20.050.

246-334-060 Labels. [Statutory Authority: RCW 43.20.050. 91-02-051 (Order 124B), recodified as § 246-334-060, filed 12/27/90, effective 1/31/91; Regulation .112.060, filed 2/18/66.] Repealed by 92-02-019 (Order 225B), filed 12/23/91, effective 1/23/92. Statutory Authority: RCW 43.20.050.

Chapter 246-336
HOME CARE AGENCY RULES

246-336-001 Purpose and scope. [Statutory Authority: RCW 70.127.120. 94-17-137, § 246-336-001, filed 8/22/94, effective 9/22/94. Statutory Authority: RCW 43.70.-040. 91-02-049 (Order 121), recodified as § 246-336-001, filed 12/27/90, effective 1/31/91. Statutory Authority: RCW 70.126.040. 89-12-077 (Order 2790), § 248-36-005, filed 6/7/89.] Repealed by 97-20-101, filed 9/29/97, effective 10/30/97. Statutory Authority: RCW 43.70.040.

246-336-010 Definitions. [Statutory Authority: RCW 70.127.120. 94-17-137, § 246-336-010, filed 8/22/94, effective 9/22/94. Statutory Authority: RCW 70.127.120 and 70.127.270. 92-02-018 (Order 224), § 246-336-010, filed 12/23/91, effective 1/23/92. Statutory Authority: RCW 43.70.040. 91-02-049 (Order 121), recodified as § 246-336-010, filed 12/27/90, effective 1/31/91. Statutory Authority: RCW 70.126.040. 89-12-077 (Order 2790), § 248-36-015, filed 6/7/89.] Repealed by 02-18-026, filed 8/23/02, effective 10/1/02. Statutory Authority: Chapter 70.127 RCW.

246-336-025 Licensure—Initial, renewal, transfer. [Statutory Authority: RCW 70.127.120. 94-17-137, § 246-336-025, filed 8/22/94, effective 9/22/94. Statutory Authority: RCW 70.127.120 and 70.127.270. 92-02-018 (Order 224), § 246-336-025, filed 12/23/91, effective 1/23/92. Statutory Authority: RCW 43.70.040. 91-02-049 (Order 121), recodified as § 246-336-025, filed 12/27/90, effective 1/31/91. Statutory Authority: Chapter 34.05 RCW, RCW 34.05.220 (1)(a) and 70.126.040. 90-06-019 (Order 039), § 248-36-025, filed 2/28/90, effective

3/1/90. Statutory Authority: RCW 70.126.040. 89-12-077 (Order 2790), § 248-36-025, filed 6/7/89.] Repealed by 02-18-026, filed 8/23/02, effective 10/1/02. Statutory Authority: Chapter 70.127 RCW.

246-336-030 Deemed status. [Statutory Authority: RCW 70.127.120. 94-17-137, § 246-336-030, filed 8/22/94, effective 9/22/94.] Repealed by 02-18-026, filed 8/23/02, effective 10/1/02. Statutory Authority: Chapter 70.127 RCW.

246-336-035 Responsibilities and rights—Licensee and department. [Statutory Authority: RCW 70.127.120. 94-17-137, § 246-336-035, filed 8/22/94, effective 9/22/94. Statutory Authority: RCW 70.127.120, 70.127.270 and 34.05.-220. 92-02-018 (Order 224), § 246-336-035, filed 12/23/91, effective 1/23/92. Statutory Authority: RCW 43.70.040. 91-02-049 (Order 121), recodified as § 246-336-035, filed 12/27/90, effective 1/31/91. Statutory Authority: Chapter 34.05 RCW, RCW 34.05.220 (1)(a) and 70.126.040. 90-06-019 (Order 039), § 248-36-035, filed 2/28/90, effective 3/1/90. Statutory Authority: RCW 70.126.040. 89-12-077 (Order 2790), § 248-36-035, filed 6/7/89.] Repealed by 02-18-026, filed 8/23/02, effective 10/1/02. Statutory Authority: Chapter 70.127 RCW.

246-336-045 Civil fines. [Statutory Authority: RCW 43.70.040. 91-02-049 (Order 121), recodified as § 246-336-045, filed 12/27/90, effective 1/31/91. Statutory Authority: Chapter 34.05 RCW, RCW 34.05.220 (1)(a) and 70.126.040. 90-06-019 (Order 039), § 248-36-045, filed 2/28/90, effective 3/1/90. Statutory Authority: RCW 70.126.-040. 89-12-077 (Order 2790), § 248-36-045, filed 6/7/89.] Repealed by 94-17-137, filed 8/22/94, effective 9/22/94. Statutory Authority: RCW 70.127.120.

246-336-055 License action and/or civil fine—Notice—Adjudicative proceeding. [Statutory Authority: RCW 70.127.120, 70.127.270 and 34.05.220. 92-02-018 (Order 224), § 246-336-055, filed 12/23/91, effective 1/23/92. Statutory Authority: RCW 43.70.040. 91-02-049 (Order 121), recodified as § 246-336-055, filed 12/27/90, effective 1/31/91. Statutory Authority: Chapter 34.05 RCW, RCW 34.05.220 (1)(a) and 70.126.040. 90-06-019 (Order 039), § 248-36-055, filed 2/28/90, effective 3/1/90. Statutory Authority: RCW 70.126.040. 89-12-077 (Order 2790), § 248-36-055, filed 6/7/89.] Repealed by 94-17-137, filed 8/22/94, effective 9/22/94. Statutory Authority: RCW 70.127.120.

246-336-065 General requirements. [Statutory Authority: RCW 70.127.120. 94-17-137, § 246-336-065, filed 8/22/94, effective 9/22/94. Statutory Authority: RCW 43.70.-040. 91-02-049 (Order 121), recodified as § 246-336-065, filed 12/27/90, effective 1/31/91. Statutory Authority: RCW 70.126.040. 89-12-077 (Order 2790), § 248-36-065, filed 6/7/89.] Repealed by 02-18-026, filed 8/23/02, effective 10/1/02. Statutory Authority: Chapter 70.127 RCW.

246-336-077 Participant bill of rights. [Statutory Authority: RCW 70.127.120. 94-17-137, § 246-336-077, filed 8/22/94, effective 9/22/94. Statutory Authority: RCW 43.70.-040. 91-02-049 (Order 121), recodified as § 246-336-077, filed 12/27/90, effective 1/31/91. Statutory Authority: RCW 70.126.040. 89-12-077 (Order 2790), § 248-36-077, filed 6/7/89.] Repealed by 02-18-026, filed 8/23/02, effective 10/1/02. Statutory Authority: Chapter 70.127 RCW.

246-336-085 Organization and administration. [Statutory Authority: RCW 70.127.120. 94-17-137, § 246-336-085, filed 8/22/94, effective 9/22/94. Statutory Authority: RCW 43.70.040. 91-02-049 (Order 121), recodified as § 246-336-085, filed 12/27/90, effective 1/31/91. Statutory Authority: RCW 70.126.040. 89-12-077 (Order 2790), § 248-36-085, filed 6/7/89.] Repealed by 02-18-026, filed 8/23/02, effective 10/1/02. Statutory Authority: Chapter 70.127 RCW.

246-336-095 Personnel, contractors and volunteers. [Statutory Authority: RCW 70.127.120. 94-17-137, § 246-336-095, filed 8/22/94, effective 9/22/94. Statutory Authority: RCW 43.70.040. 91-02-049 (Order 121), recodified as § 246-336-095, filed 12/27/90, effective 1/31/91. Statutory Authority: RCW 70.126.040. 89-12-077 (Order 2790), § 248-36-095, filed 6/7/89.] Repealed by 02-18-026, filed 8/23/02, effective 10/1/02. Statutory Authority: Chapter 70.127 RCW.

246-336-100 Criminal history, disclosure, and background inquiries. [Statutory Authority: RCW 70.127.120. 94-17-137, § 246-336-100, filed 8/22/94, effective 9/22/94. Statutory Authority: RCW 43.43.842, 43.43.830 through 43.43.-842. 93-16-030 (Order 381), § 246-336-100, filed 7/26/93, effective 8/26/93.] Repealed by 02-18-026, filed 8/23/02, effective 10/1/02. Statutory Authority: Chapter 70.127 RCW.

246-336-105 HIV/AIDS education and training. [Statutory Authority: RCW 70.127.120. 94-17-137, § 246-336-105, filed 8/22/94, effective 9/22/94. Statutory Authority: RCW 70.127.120, 70.127.270 and 70.24.310. 92-02-018 (Order 224), § 246-336-105, filed 12/23/91, effective 1/23/92. Statutory Authority: RCW 43.70.040. 91-02-049 (Order 121), recodified as § 246-336-105, filed 12/27/90, effective 1/31/91. Statutory Authority: RCW 70.126.040. 89-12-077 (Order 2790), § 248-36-105, filed 6/7/89.] Repealed by 02-18-026, filed 8/23/02, effective 10/1/02. Statutory Authority: Chapter 70.127 RCW.

246-336-115 Participant care policies and procedures. [Statutory Authority: RCW 70.127.120. 94-17-137, § 246-336-115, filed 8/22/94, effective 9/22/94. Statutory Authority: RCW 43.70.040. 91-02-049 (Order 121), recodified as § 246-336-115, filed 12/27/90, effective 1/31/91. Statutory Authority: RCW 70.126.040. 89-12-077 (Order 2790), § 248-36-115, filed 6/7/89.] Repealed by 02-18-026, filed 8/23/02, effective 10/1/02. Statutory Authority: Chapter 70.127 RCW.

246-336-125 Supervision and coordination of services. [Statutory Authority: RCW 70.127.120. 94-17-137, § 246-336-125, filed 8/22/94, effective 9/22/94. Statutory Authority: RCW 70.127.120 and 70.127.270. 92-02-018 (Order 224), § 246-336-125, filed 12/23/91, effective 1/23/92. Statutory Authority: RCW 43.70.040. 91-02-049 (Order 121), recodified as § 246-336-125, filed 12/27/90, effective 1/31/91. Statutory Authority: RCW 70.126.040. 89-12-077 (Order 2790), § 248-36-125, filed 6/7/89.] Repealed by 02-18-026, filed 8/23/02, effective 10/1/02. Statutory Authority: Chapter 70.127 RCW.

246-336-135 Home care plan of care. [Statutory Authority: RCW 70.127.120. 94-17-137, § 246-336-135, filed 8/22/94, effective 9/22/94. Statutory Authority: RCW 43.70.-040. 91-02-049 (Order 121), recodified as § 246-336-135, filed 12/27/90, effective 1/31/91. Statutory Authority: RCW 70.126.040. 89-12-077 (Order 2790), § 248-36-135, filed 6/7/89.] Repealed by 02-18-026, filed 8/23/02, effective 10/1/02. Statutory Authority: Chapter 70.127 RCW.

246-336-165 Participant care records. [Statutory Authority: RCW 70.127.120. 94-17-137, § 246-336-165, filed 8/22/94, effective 9/22/94. Statutory Authority: RCW 43.70.-040. 91-02-049 (Order 121), recodified as § 246-336-165, filed 12/27/90, effective 1/31/91. Statutory Authority: RCW 70.126.040. 89-12-077 (Order 2790), § 248-36-165, filed 6/7/89.] Repealed by 02-18-026, filed 8/23/02, effective 10/1/02. Statutory Authority: Chapter 70.127 RCW.

246-336-990 Fees. [Statutory Authority: RCW 70.127.090, 43.20B.-110, 43.70.250. 01-22-062, § 246-336-990, filed 11/1/01, effective 12/2/01. Statutory Authority: RCW 70.127.090, 43.02B.020 [43.20B.020], 43.70.110 and 43.70.250. 98-13-036, § 246-336-990, filed 6/8/98, effective 7/9/98. Statutory Authority: RCW 43.70.110, 43.70.250 and 70.127.090. 97-15-096, § 246-336-990, filed 7/21/97, effective 8/21/97. Statutory Authority: RCW 43.70.110 and 43.70.250. 96-12-028, § 246-336-990, filed 5/30/96, effective 6/30/96. Statutory Authority: RCW 43.70.250, 43.70.110 and 43.20B.020. 95-12-097, § 246-336-990, filed 6/7/95, effective 7/8/95. Statutory Authority: RCW 70.127.120. 94-17-137, § 246-336-990, filed 8/22/94, effective 9/22/94. Statutory Authority: RCW 70.127.120 and 70.127.090. 93-21-034, § 246-336-990, filed 10/15/93, effective 10/28/93. Statutory Authority: RCW 43.70.250. 92-15-084 (Order 288), § 246-336-990, filed 7/16/92, effective 8/16/92. Statutory Authority: RCW 43.70.040. 91-02-050 (Order 122), § 246-336-990, filed 12/27/90, effective 1/31/91.] Repealed by 02-18-026, filed 8/23/02, effective 10/1/02. Statutory Authority: Chapter 70.127 RCW.

Reviser's note: Later promulgation, see chapter 246-335 WAC.

Chapter 246-340
SECOND TRIMESTER ABORTION FACILITIES

246-340-001 Purpose. [Statutory Authority: RCW 43.70.040. 91-02-049 (Order 121), recodified as § 246-340-001, filed 12/27/90, effective 1/31/91. Statutory Authority: 1985 c 213. 86-08-002 (Order 2348), § 248-140-010, filed 3/20/86; Order 53, § 248-140-010, filed 2/8/71.] Repealed by 93-19-109 (Order 391), filed 9/20/93, effective 10/21/93. Statutory Authority: RCW 43.70.-040.

246-340-010 Definitions. [Statutory Authority: RCW 43.70.040, 9.02.005 and 9.02.070. 92-02-018 (Order 224), § 246-340-010, filed 12/23/91, effective 1/23/92. Statutory Authority: RCW 43.70.040. 91-02-049 (Order 121), recodified as § 246-340-010, filed 12/27/90, effective 1/31/91. Statutory Authority: 1985 c 213. 86-08-002 (Order 2348), § 248-140-140, filed 3/20/86. Statutory Authority: RCW 9.02.070 and 43.20.050. 83-01-066 (Order 251), § 248-140-140, filed 12/15/82; Order 87, § 248-140-140, filed 6/12/73.] Repealed by 93-19-109 (Order 391), filed 9/20/93, effective 10/21/93. Statutory Authority: RCW 43.70.040.

246-340-020 Facilities approved for termination of pregnancy. [Statutory Authority: RCW 43.70.040, 9.02.005 and 9.02.-070. 92-02-018 (Order 224), § 246-340-020, filed 12/23/91, effective 1/23/92. Statutory Authority: RCW 43.70.040. 91-02-049 (Order 121), recodified as § 246-340-020, filed 12/27/90, effective 1/31/91. Statutory Authority: 1985 c 213. 86-08-002 (Order 2348), § 248-140-150, filed 3/20/86. Statutory Authority: RCW 9.02.070 and 43.20.050. 83-01-066 (Order 251), § 248-140-150, filed 12/15/82; Order 87, § 248-140-150, filed 6/12/73.] Repealed by 93-19-109 (Order 391), filed 9/20/93, effective 10/21/93. Statutory Authority: RCW 43.70.040.

246-340-030 Certificate of approval required. [Statutory Authority: RCW 43.70.040. 91-02-049 (Order 121), recodified as § 246-340-030, filed 12/27/90, effective 1/31/91. Statutory Authority: RCW 9.02.070 and 43.20.050. 83-01-066 (Order 251), § 248-140-160, filed 12/15/82; Order 87, § 248-140-160, filed 6/12/73.] Repealed by 93-19-109 (Order 391), filed 9/20/93, effective 10/21/93. Statutory Authority: RCW 43.70.040.

246-340-040 Application for certificate of approval. [Statutory Authority: RCW 43.70.040. 91-02-049 (Order 121), recodified as § 246-340-040, filed 12/27/90, effective 1/31/91. Statutory Authority: RCW 9.02.070 and 43.20.050. 83-01-066 (Order 251), § 248-140-170, filed 12/15/82; Order 87, § 248-140-170, filed 6/12/73.] Repealed by 93-19-109 (Order 391), filed 9/20/93, effective 10/21/93. Statutory Authority: RCW 43.70.-040.

246-340-050 Issuance, duration, and assignment of certificate of approval. [Statutory Authority: RCW 43.70.040, 9.02.-005, 9.02.070 and 34.05.220. 92-02-018 (Order 224), § 246-340-050, filed 12/23/91, effective 1/23/92. Statutory Authority: RCW 43.70.040. 91-02-049 (Order 121), recodified as § 246-340-050, filed 12/27/90, effective 1/31/91. Statutory Authority: RCW 9.02.070 and 43.20.050. 83-01-066 (Order 251), § 248-140-180, filed 12/15/82; Order 87, § 248-140-180, filed 6/12/73.] Repealed by 93-19-109 (Order 391), filed 9/20/93, effective 10/21/93. Statutory Authority: RCW 43.70.-040.

246-340-060 Form of application for certificate of approval and inspection. [Statutory Authority: RCW 43.70.040. 91-02-049 (Order 121), recodified as § 246-340-060, filed 12/27/90, effective 1/31/91; Order 87, § 248-140-190, filed 6/12/73.] Repealed by 93-19-109 (Order 391), filed 9/20/93, effective 10/21/93. Statutory Authority: RCW 43.70.040.

246-340-070 Notice of decision—Adjudicative proceeding. [Statutory Authority: RCW 43.70.040, 9.02.005, 9.02.070 and 34.05.220. 92-02-018 (Order 224), § 246-340-070, filed 12/23/91, effective 1/23/92. Statutory Authority: RCW 43.70.040. 91-02-049 (Order 121), recodified as § 246-340-070, filed 12/27/90, effective 1/31/91. Statutory Authority: RCW 42.20.050 and chapter 34.05 RCW. 90-05-038 (Order 034), § 248-140-200, filed 2/14/90, effective 3/17/90; Order 87, § 248-140-200, filed 6/12/73.] Repealed by 93-19-109 (Order 391), filed 9/20/93, effective 10/21/93. Statutory Authority: RCW 43.70.040.

246-340-080 Nonhospital facilities approved for termination of pregnancy during the second trimester. [Statutory Authority: RCW 43.70.040. 91-02-049 (Order 121), recodified as § 246-340-080, filed 12/27/90, effective 1/31/91. Statutory Authority: RCW 9.02.070 and 43.20.050. 83-01-066 (Order 251), § 248-140-210, filed 12/15/82; Order 87, § 248-140-210, filed 6/12/73.] Repealed by 93-19-109 (Order 391), filed 9/20/93, effective 10/21/93. Statutory Authority: RCW 43.70.040.

246-340-085 Criminal history, disclosure, and background inquiries. [Statutory Authority: RCW 43.43.830 through 43.43.-842. 93-16-030 (Order 381), § 246-340-085, filed 7/26/93, effective 8/26/93.] Repealed by 98-09-120, filed 4/22/98, effective 5/23/98. Statutory Authority: RCW 43.43.830 through 43.43.842.

246-340-090 HIV/AIDS education and training. [Statutory Authority: RCW 43.70.040, 9.02.005, 9.02.070 and 70.24.310. 92-02-018 (Order 224), § 246-340-090, filed 12/23/91, effective 1/23/92. Statutory Authority: RCW 43.70.040. 91-02-049 (Order 121), recodified as § 246-340-090, filed 12/27/90, effective 1/31/91. Statutory Authority: RCW 70.24.310. 89-21-038 (Order 3), § 248-140-215, filed 10/12/89, effective 11/12/89.] Repealed by 93-19-109 (Order 391), filed 9/20/93, effective 10/21/93. Statutory Authority: RCW 43.70.-040.

246-340-100 Reporting of pregnancy terminations. [Statutory Authority: RCW 43.70.040. 91-02-049 (Order 121), recodified as § 246-340-100, filed 12/27/90, effective 1/31/91. Statutory Authority: 1985 c 213. 86-08-002 (Order 2348), § 248-140-220, filed 3/20/86. Statutory Authority: RCW 43.20.050. 80-14-063 (Order 202), § 248-140-220, filed 10/1/80; Order 87, § 248-140-220, filed 6/12/73.] Repealed by 93-19-109 (Order 391), filed 9/20/93, effective 10/21/93. Statutory Authority: RCW 43.70.040.

246-340-110 Disclosure of information. [Statutory Authority: RCW 43.70.040. 91-02-049 (Order 121), recodified as § 246-340-110, filed 12/27/90, effective 1/31/91. Statutory Authority: RCW 43.20.050. 80-14-063 (Order 202), § 248-140-230, filed 10/1/80.] Repealed by 93-19-109 (Order 391), filed 9/20/93, effective 10/21/93. Statutory Authority: RCW 43.70.040.

246-340-990 Fees. [Statutory Authority: RCW 43.70.040. 91-02-050 (Order 122), § 246-340-990, filed 12/27/90, effective 1/31/91.] Repealed by 93-19-109 (Order 391), filed 9/20/93, effective 10/21/93. Statutory Authority: RCW 43.70.040.

Chapter 246-378
MOBILE HOME PARKS

246-378-010 Definition. [Statutory Authority: RCW 43.20.050. 91-02-051 (Order 124B), recodified as § 246-378-010, filed 12/27/90, effective 1/31/91. Statutory Authority: 1981 c 304. 81-24-056 (Order 220), § 248-75-010, filed 12/1/81.] Repealed by 96-19-043, filed 9/12/96, effective 10/13/96. Statutory Authority: RCW 43.20.050.

246-378-020 Sewage disposal. [Statutory Authority: RCW 43.20.050 and 59.20.190. 92-02-019 (Order 225B), § 246-378-020, filed 12/23/91, effective 1/23/92. Statutory Authority: RCW 43.20.050. 91-02-051 (Order 124B), recodified as § 246-378-020, filed 12/27/90, effective 1/31/91. Statutory Authority: 1981 c 304. 81-24-056 (Order 220), § 248-75-020, filed 12/1/81.] Repealed by 96-19-043, filed 9/12/96, effective 10/13/96. Statutory Authority: RCW 43.20.050.

246-378-030 Water supply. [Statutory Authority: RCW 43.20.050 and 59.20.190. 92-02-019 (Order 225B), § 246-378-030, filed 12/23/91, effective 1/23/92. Statutory Authority: RCW 43.20.050. 91-02-051 (Order 124B), recodified as § 246-378-030, filed 12/27/90, effective 1/31/91. Statutory Authority: 1981 c 304. 81-24-056 (Order 220), § 248-75-030, filed 12/1/81.] Repealed by 96-19-043, filed 9/12/96, effective 10/13/96. Statutory Authority: RCW 43.20.050.

246-378-040 Refuse disposal. [Statutory Authority: RCW 43.20.050 and 59.20.190. 92-02-019 (Order 225B), § 246-378-040, filed 12/23/91, effective 1/23/92. Statutory Authority: RCW 43.20.050. 91-02-051 (Order 124B), recodified as § 246-378-040, filed 12/27/90, effective 1/31/91. Statutory Authority: 1981 c 304. 81-24-056 (Order 220), § 248-75-040, filed 12/1/81.] Repealed by 96-19-043, filed 9/12/96, effective 10/13/96. Statutory Authority: RCW 43.20.050.

246-378-050 General sanitation. [Statutory Authority: RCW 43.20.-050 and 59.20.190. 92-02-019 (Order 225B), § 246-378-050, filed 12/23/91, effective 1/23/92. Statutory Authority: RCW 43.20.050. 91-02-051 (Order 124B), recodified as § 246-378-050, filed 12/27/90, effective 1/31/91. Statutory Authority: 1981 c 304. 81-24-056 (Order 220), § 248-75-050, filed 12/1/81.] Repealed by 96-19-043, filed 9/12/96, effective 10/13/96. Statutory Authority: RCW 43.20.050.

Chapter 246-388
RURAL HEALTH CARE FACILITY LICENSING RULES

246-388-001 Purpose. [Statutory Authority: Chapter 70.175 RCW. 91-02-014 (Order 123), § 246-388-001, filed 12/21/90, effective 1/21/91.] Repealed by 02-17-001, filed 8/7/02, effective 9/7/02. Statutory Authority: RCW 50.175.100 [70.175.100].

246-388-010 Definitions. [Statutory Authority: RCW 70.175.040 and 70.175.100. 92-02-018 (Order 224), § 246-388-010, filed 12/23/91, effective 1/23/92. Statutory Authority: Chapter 70.175 RCW. 91-02-014 (Order 123), § 246-388-010, filed 12/21/90, effective 1/21/91.] Repealed by 02-17-001, filed 8/7/02, effective 9/7/02. Statutory Authority: RCW 50.175.100 [70.175.100].

246-388-020 License—Application—Denial—Appeal. [Statutory Authority: Chapter 70.175 RCW. 91-02-014 (Order 123), § 246-388-020, filed 12/21/90, effective 1/21/91.] Repealed by 02-17-001, filed 8/7/02, effective 9/7/02. Statutory Authority: RCW 50.175.100 [70.175.100].

246-388-030 Exemptions. [Statutory Authority: Chapter 70.175 RCW. 91-02-014 (Order 123), § 246-388-030, filed 12/21/90, effective 1/21/91.] Repealed by 02-17-001, filed 8/7/02, effective 9/7/02. Statutory Authority: RCW 50.175.100 [70.175.100].

246-388-040 Department approval of construction. [Statutory Authority: Chapter 70.175 RCW. 91-02-014 (Order 123), § 246-388-040, filed 12/21/90, effective 1/21/91.] Repealed by 02-17-001, filed 8/7/02, effective 9/7/02. Statutory Authority: RCW 50.175.100 [70.175.100].

246-388-050 Governing body and administration. [Statutory Authority: Chapter 70.175 RCW. 91-02-014 (Order 123), § 246-388-050, filed 12/21/90, effective 1/21/91.] Repealed by 02-17-001, filed 8/7/02, effective 9/7/02. Statutory Authority: RCW 50.175.100 [70.175.100].

246-388-060 Quality assurance. [Statutory Authority: Chapter 70.175 RCW. 91-02-014 (Order 123), § 246-388-060, filed 12/21/90, effective 1/21/91.] Repealed by 02-17-001, filed 8/7/02, effective 9/7/02. Statutory Authority: RCW 50.175.100 [70.175.100].

246-388-070 Personnel. [Statutory Authority: RCW 43.43.830 through 43.43.842. 93-16-030 (Order 381), § 246-388-070, filed 7/26/93, effective 8/26/93. Statutory Authority: RCW 70.175.040 and 70.175.100. 92-02-018 (Order 224), § 246-388-070, filed 12/23/91, effective 1/23/92. Statutory Authority: Chapter 70.175 RCW. 91-02-014 (Order 123), § 246-388-070, filed 12/21/90, effective 1/21/91.] Repealed by 02-17-001, filed 8/7/02, effective 9/7/02. Statutory Authority: RCW 50.175.100 [70.175.100].

246-388-072 Criminal history, disclosure, and background inquiries. [Statutory Authority: RCW 43.43.830 through 43.43.-842. 93-16-030 (Order 381), § 246-388-072, filed 7/26/93, effective 8/26/93.] Repealed by 02-17-001, filed 8/7/02, effective 9/7/02. Statutory Authority: RCW 50.175.100 [70.175.100].

246-388-080 Infection control. [Statutory Authority: RCW 70.175.-040, 70.175.100 and 70.24.310. 92-02-018 (Order 224), § 246-388-080, filed 12/23/91, effective 1/23/92. Statutory Authority: Chapter 70.175 RCW. 91-02-014 (Order 123), § 246-388-080, filed 12/21/90, effective 1/21/91.] Repealed by 02-17-001, filed 8/7/02, effective 9/7/02. Statutory Authority: RCW 50.175.100 [70.175.-100].

246-388-090 Abuse reports. [Statutory Authority: Chapter 70.175 RCW. 91-02-014 (Order 123), § 246-388-090, filed 12/21/90, effective 1/21/91.] Repealed by 02-17-001, filed 8/7/02, effective 9/7/02. Statutory Authority: RCW 50.175.100 [70.175.100].

246-388-100 Water supply. [Statutory Authority: RCW 70.175.040 and 70.175.100. 92-02-018 (Order 224), § 246-388-100, filed 12/23/91, effective 1/23/92. Statutory Authority: Chapter 70.175 RCW. 91-02-014 (Order 123), § 246-388-100, filed 12/21/90, effective 1/21/91.] Repealed by 02-17-001, filed 8/7/02, effective 9/7/02. Statutory Authority: RCW 50.175.100 [70.175.100].

246-388-110 Plumbing. [Statutory Authority: RCW 70.175.040 and 70.175.100. 92-02-018 (Order 224), § 246-388-110, filed 12/23/91, effective 1/23/92. Statutory Authority: Chapter 70.175 RCW. 91-02-014 (Order 123), § 246-388-110, filed 12/21/90, effective 1/21/91.] Repealed by 02-17-001, filed 8/7/02, effective 9/7/02. Statutory Authority: RCW 50.175.100 [70.175.100].

246-388-120 Staff facilities. [Statutory Authority: Chapter 70.175 RCW. 91-02-014 (Order 123), § 246-388-120, filed 12/21/90, effective 1/21/91.] Repealed by 02-17-001, filed 8/7/02, effective 9/7/02. Statutory Authority: RCW 50.175.100 [70.175.100].

246-388-130 Storage. [Statutory Authority: Chapter 70.175 RCW. 91-02-014 (Order 123), § 246-388-130, filed 12/21/90, effective 1/21/91.] Repealed by 02-17-001, filed 8/7/02, effective 9/7/02. Statutory Authority: RCW 50.175.100 [70.175.100].

246-388-140 Heating. [Statutory Authority: Chapter 70.175 RCW. 91-02-014 (Order 123), § 246-388-140, filed 12/21/90, effective 1/21/91.] Repealed by 02-17-001, filed 8/7/02, effective 9/7/02. Statutory Authority: RCW 50.175.100 [70.175.100].

246-388-150 Lighting and wiring. [Statutory Authority: Chapter 70.175 RCW. 91-02-014 (Order 123), § 246-388-150, filed 12/21/90, effective 1/21/91.] Repealed by 02-17-001, filed 8/7/02, effective 9/7/02. Statutory Authority: RCW 50.175.100 [70.175.100].

246-388-160 Emergency light and power. [Statutory Authority: RCW 70.175.040 and 70.175.100. 92-02-018 (Order 224), § 246-388-160, filed 12/23/91, effective 1/23/92. Statutory Authority: Chapter 70.175 RCW. 91-02-014 (Order 123), § 246-388-160, filed 12/21/90, effective 1/21/91.] Repealed by 02-17-001, filed 8/7/02, effective 9/7/02. Statutory Authority: RCW 50.175.100 [70.175.-100].

246-388-170 Ventilation. [Statutory Authority: RCW 70.175.040 and 70.175.100. 92-02-018 (Order 224), § 246-388-170, filed 12/23/91, effective 1/23/92. Statutory Authority: Chapter 70.175 RCW. 91-02-014 (Order 123), § 246-388-170, filed 12/21/90, effective 1/21/91.] Repealed by 02-17-001, filed 8/7/02, effective 9/7/02. Statutory Authority: RCW 50.175.100 [70.175.100].

246-388-180 Corridors and doors. [Statutory Authority: Chapter 70.175 RCW. 91-02-014 (Order 123), § 246-388-180, filed 12/21/90, effective 1/21/91.] Repealed by 02-17-001, filed 8/7/02, effective 9/7/02. Statutory Authority: RCW 50.175.100 [70.175.100].

246-388-190 Carpets. [Statutory Authority: Chapter 70.175 RCW. 91-02-014 (Order 123), § 246-388-190, filed 12/21/90, effective 1/21/91.] Repealed by 02-17-001, filed 8/7/02, effective 9/7/02. Statutory Authority: RCW 50.175.100 [70.175.100].

246-388-200 Stairways, ramps, and elevators. [Statutory Authority: Chapter 70.175 RCW. 91-02-014 (Order 123), § 246-388-200, filed 12/21/90, effective 1/21/91.] Repealed by 02-17-001, filed 8/7/02, effective 9/7/02. Statutory Authority: RCW 50.175.100 [70.175.100].

246-388-210 Sewage, garbage, and waste. [Statutory Authority: Chapter 70.175 RCW. 91-02-014 (Order 123), § 246-388-210, filed 12/21/90, effective 1/21/91.] Repealed by 02-17-001, filed 8/7/02, effective 9/7/02. Statutory Authority: RCW 50.175.100 [70.175.100].

246-388-220 Medical gases. [Statutory Authority: Chapter 70.175 RCW. 91-02-014 (Order 123), § 246-388-220, filed 12/21/90, effective 1/21/91.] Repealed by 02-17-001, filed 8/7/02, effective 9/7/02. Statutory Authority: RCW 50.175.100 [70.175.100].

246-388-230 Core services. [Statutory Authority: Chapter 70.175 RCW. 91-02-014 (Order 123), § 246-388-230, filed 12/21/90, effective 1/21/91.] Repealed by 02-17-001, filed 8/7/02, effective 9/7/02. Statutory Authority: RCW 50.175.100 [70.175.100].

246-388-240 Core services—Twenty-four-hour emergency care. [Statutory Authority: RCW 70.175.040 and 70.175.-100. 92-02-018 (Order 224), § 246-388-240, filed 12/23/91, effective 1/23/92. Statutory Authority: Chapter 70.175 RCW. 91-02-014 (Order 123), § 246-388-240, filed 12/21/90, effective 1/21/91.] Repealed by 02-17-001, filed 8/7/02, effective 9/7/02. Statutory Authority: RCW 50.175.100 [70.175.100].

246-388-250 Core service—Outpatient care. [Statutory Authority: Chapter 70.175 RCW. 91-02-014 (Order 123), § 246-

388-250, filed 12/21/90, effective 1/21/91.] Repealed by 02-17-001, filed 8/7/02, effective 9/7/02. Statutory Authority: RCW 50.175.100 [70.175.100].

246-388-260 Core service—Laboratory. [Statutory Authority: RCW 70.175.040 and 70.175.100. 92-02-018 (Order 224), § 246-388-260, filed 12/23/91, effective 1/23/92. Statutory Authority: Chapter 70.175 RCW. 91-02-014 (Order 123), § 246-388-260, filed 12/21/90, effective 1/21/91.] Repealed by 02-17-001, filed 8/7/02, effective 9/7/02. Statutory Authority: RCW 50.175.100 [70.175.-100].

246-388-270 Core service—Radiology. [Statutory Authority: RCW 70.175.040 and 70.175.100. 92-02-018 (Order 224), § 246-388-270, filed 12/23/91, effective 1/23/92. Statutory Authority: Chapter 70.175 RCW. 91-02-014 (Order 123), § 246-388-270, filed 12/21/90, effective 1/21/91.] Repealed by 02-17-001, filed 8/7/02, effective 9/7/02. Statutory Authority: RCW 50.175.100 [70.175.-100].

246-388-280 Core service—Inpatient care. [Statutory Authority: Chapter 70.175 RCW. 91-02-014 (Order 123), § 246-388-280, filed 12/21/90, effective 1/21/91.] Repealed by 02-17-001, filed 8/7/02, effective 9/7/02. Statutory Authority: RCW 50.175.100 [70.175.100].

246-388-290 Core service—Low-risk maternal patient and newborn care. [Statutory Authority: RCW 70.175.040 and 70.175.100. 92-02-018 (Order 224), § 246-388-290, filed 12/23/91, effective 1/23/92. Statutory Authority: Chapter 70.175 RCW. 91-02-014 (Order 123), § 246-388-290, filed 12/21/90, effective 1/21/91.] Repealed by 02-17-001, filed 8/7/02, effective 9/7/02. Statutory Authority: RCW 50.175.100 [70.175.100].

246-388-300 Support services and functions. [Statutory Authority: Chapter 70.175 RCW. 91-02-014 (Order 123), § 246-388-300, filed 12/21/90, effective 1/21/91.] Repealed by 02-17-001, filed 8/7/02, effective 9/7/02. Statutory Authority: RCW 50.175.100 [70.175.100].

246-388-310 Support services and functions—Materials processing and management. [Statutory Authority: Chapter 70.175 RCW. 91-02-014 (Order 123), § 246-388-310, filed 12/21/90, effective 1/21/91.] Repealed by 02-17-001, filed 8/7/02, effective 9/7/02. Statutory Authority: RCW 50.175.100 [70.175.100].

246-388-320 Support services and functions—Dietary. [Statutory Authority: RCW 70.175.040 and 70.175.100. 92-02-018 (Order 224), § 246-388-320, filed 12/23/91, effective 1/23/92. Statutory Authority: Chapter 70.175 RCW. 91-02-014 (Order 123), § 246-388-320, filed 12/21/90, effective 1/21/91.] Repealed by 02-17-001, filed 8/7/02, effective 9/7/02. Statutory Authority: RCW 50.175.100 [70.175.100].

246-388-330 Support services and functions—Housekeeping. [Statutory Authority: Chapter 70.175 RCW. 91-02-014 (Order 123), § 246-388-330, filed 12/21/90, effective 1/21/91.] Repealed by 02-17-001, filed 8/7/02, effective 9/7/02. Statutory Authority: RCW 50.175.100 [70.175.-100].

246-388-340 Support services and functions—Laundry. [Statutory Authority: Chapter 70.175 RCW. 91-02-014 (Order 123), § 246-388-340, filed 12/21/90, effective 1/21/91.] Repealed by 02-17-001, filed 8/7/02, effective 9/7/02. Statutory Authority: RCW 50.175.100 [70.175.100].

246-388-350 Support services and functions—Maintenance. [Statutory Authority: Chapter 70.175 RCW. 91-02-014 (Order 123), § 246-388-350, filed 12/21/90, effective 1/21/91.] Repealed by 02-17-001, filed 8/7/02, effective 9/7/02. Statutory Authority: RCW 50.175.100 [70.175.-100].

246-388-360 Support services and functions—Medical records. [Statutory Authority: Chapter 70.175 RCW. 91-02-014 (Order 123), § 246-388-360, filed 12/21/90, effective 1/21/91.] Repealed by 02-17-001, filed 8/7/02, effective 9/7/02. Statutory Authority: RCW 50.175.100 [70.175.-100].

246-388-370 Support services and functions—Pharmacy service. [Statutory Authority: Chapter 70.175 RCW. 91-02-014 (Order 123), § 246-388-370, filed 12/21/90, effective 1/21/91.] Repealed by 02-17-001, filed 8/7/02, effective 9/7/02. Statutory Authority: RCW 50.175.100 [70.175.-100].

246-388-380 Support services and functions—Intravenous care. [Statutory Authority: Chapter 70.175 RCW. 91-02-014 (Order 123), § 246-388-380, filed 12/21/90, effective 1/21/91.] Repealed by 02-17-001, filed 8/7/02, effective 9/7/02. Statutory Authority: RCW 50.175.100 [70.175.-100].

246-388-390 Support services and functions—Discharge planning. [Statutory Authority: Chapter 70.175 RCW. 91-02-014 (Order 123), § 246-388-390, filed 12/21/90, effective 1/21/91.] Repealed by 02-17-001, filed 8/7/02, effective 9/7/02. Statutory Authority: RCW 50.175.100 [70.175.100].

246-388-400 Optional services. [Statutory Authority: Chapter 70.175 RCW. 91-02-014 (Order 123), § 246-388-400, filed 12/21/90, effective 1/21/91.] Repealed by 02-17-001, filed 8/7/02, effective 9/7/02. Statutory Authority: RCW 50.175.100 [70.175.100].

246-388-410 Optional—Long-term care. [Statutory Authority: Chapter 70.175 RCW. 91-02-014 (Order 123), § 246-388-410, filed 12/21/90, effective 1/21/91.] Repealed by 02-17-001, filed 8/7/02, effective 9/7/02. Statutory Authority: RCW 50.175.100 [70.175.100].

246-388-420 Optional—Occupational and physical therapy and respiratory care. [Statutory Authority: Chapter 70.175 RCW. 91-02-014 (Order 123), § 246-388-420, filed 12/21/90, effective 1/21/91.] Repealed by 02-17-001, filed 8/7/02, effective 9/7/02. Statutory Authority: RCW 50.175.100 [70.175.100].

246-388-430 Optional—Other diagnostic/therapeutic services. [Statutory Authority: Chapter 70.175 RCW. 91-02-014 (Order 123), § 246-388-430, filed 12/21/90, effective 1/21/91.] Repealed by 02-17-001, filed 8/7/02, effective 9/7/02. Statutory Authority: RCW 50.175.100 [70.175.-100].

246-388-440 Optional—Surgical services. [Statutory Authority: Chapter 70.175 RCW. 91-02-014 (Order 123), § 246-388-440, filed 12/21/90, effective 1/21/91.] Repealed by 02-17-001, filed 8/7/02, effective 9/7/02. Statutory Authority: RCW 50.175.100 [70.175.100].

246-388-450 Optional—Anesthesia services. [Statutory Authority: Chapter 70.175 RCW. 91-02-014 (Order 123), § 246-388-450, filed 12/21/90, effective 1/21/91.] Repealed by 02-17-001, filed 8/7/02, effective 9/7/02. Statutory Authority: RCW 50.175.100 [70.175.100].

246-388-990 Licensure fees. [Statutory Authority: Chapter 70.175 RCW. 91-02-014 (Order 123), § 246-388-990, filed 12/21/90, effective 1/21/91.] Repealed by 02-17-001, filed 8/7/02, effective 9/7/02. Statutory Authority: RCW 50.175.100 [70.175.100].

Chapter 246-420
SENTINEL BIRTH DEFECTS

246-420-001 Purpose. [Statutory Authority: RCW 43.20.050. 91-02-051 (Order 124B), recodified as § 246-420-001, filed 12/27/90, effective 1/31/91. Statutory Authority: RCW 70.58.350 and 43.20.505. 85-21-038 (Order 295), § 248-164-001, filed 10/11/85.] Repealed by 00-23-120, filed 11/22/00, effective 12/23/00. Statutory Authority: RCW 43.20.050.

246-420-010 Definitions. [Statutory Authority: RCW 43.20.050. 91-02-051 (Order 124B), recodified as § 246-420-010, filed 12/27/90, effective 1/31/91. Statutory Authority: RCW 70.58.350 and 43.20.505. 85-21-038 (Order 295), § 248-164-010, filed 10/11/85.] Repealed by 00-23-120, filed 11/22/00, effective 12/23/00. Statutory Authority: RCW 43.20.050.

246-420-020 General requirements. [Statutory Authority: RCW 43.20.050. 91-02-051 (Order 124B), recodified as § 246-420-020, filed 12/27/90, effective 1/31/91. Statutory Authority: RCW 70.58.350 and 43.20.505. 85-21-038 (Order 295), § 248-164-020, filed 10/11/85.] Repealed by 00-23-120, filed 11/22/00, effective 12/23/00. Statutory Authority: RCW 43.20.050.

246-420-030 Information—Content of reports. [Statutory Authority: RCW 43.20.050. 91-02-051 (Order 124B), recodified as § 246-420-030, filed 12/27/90, effective 1/31/91. Statutory Authority: RCW 70.58.350 and 43.20.505. 85-21-038 (Order 295), § 248-164-030, filed 10/11/85.] Repealed by 00-23-120, filed 11/22/00, effective 12/23/00. Statutory Authority: RCW 43.20.050.

246-420-040 Information to parents. [Statutory Authority: RCW 43.20.050. 91-02-051 (Order 124B), recodified as § 246-420-040, filed 12/27/90, effective 1/31/91. Statutory Authority: RCW 70.58.350 and 43.20.505. 85-21-038 (Order 295), § 248-164-040, filed 10/11/85.] Repealed by 00-23-120, filed 11/22/00, effective 12/23/00. Statutory Authority: RCW 43.20.050.

246-420-050 Confidentiality of reports—Access to information—Use of information. [Statutory Authority: RCW 43.20.-050. 91-02-051 (Order 124B), recodified as § 246-420-050, filed 12/27/90, effective 1/31/91. Statutory Authority: RCW 70.58.350 and 43.20.505. 85-21-038 (Order 295), § 248-164-050, filed 10/11/85.] Repealed by 00-23-120, filed 11/22/00, effective 12/23/00. Statutory Authority: RCW 43.20.050.

246-420-060 Information on public and private services for handicapped. [Statutory Authority: RCW 43.20.050. 91-02-051 (Order 124B), recodified as § 246-420-060, filed 12/27/90, effective 1/31/91. Statutory Authority: RCW 70.58.350 and 43.20.505. 85-21-038 (Order 295), § 248-164-060, filed 10/11/85.] Repealed by 00-23-120, filed 11/22/00, effective 12/23/00. Statutory Authority: RCW 43.20.050.

Chapter 246-430
CANCER REPORTING

246-430-001 Purpose. [Statutory Authority: RCW 70.54.230 through 70.54.270. 92-01-050 (Order 209), § 246-430-001, filed 12/10/91, effective 1/10/92.] Repealed by 01-04-086, filed 2/7/01, effective 3/10/01. Statutory Authority: RCW 70.54.270, 43.20.050, 43.70.130.

246-430-010 Definitions. [Statutory Authority: RCW 70.54.230 through 70.54.270. 92-01-050 (Order 209), § 246-430-010, filed 12/10/91, effective 1/10/92.] Repealed by 01-04-086, filed 2/7/01, effective 3/10/01. Statutory Authority: RCW 70.54.270, 43.20.050, 43.70.130.

246-430-020 Cancer case identification. [Statutory Authority: RCW 70.54.230 through 70.54.270. 92-01-050 (Order 209), § 246-430-020, filed 12/10/91, effective 1/10/92.] Repealed by 01-04-086, filed 2/7/01, effective 3/10/01. Statutory Authority: RCW 70.54.270, 43.20.050, 43.70.130.

246-430-030 Data collection requirements. [Statutory Authority: RCW 70.54.270 and 43.70.040. 96-13-027, § 246-430-030, filed 6/11/96, effective 7/12/96. Statutory Authority: RCW 70.54.230 through 70.54.270. 92-01-050 (Order 209), § 246-430-030, filed 12/10/91, effective 1/10/92.] Repealed by 01-04-086, filed 2/7/01, effective 3/10/01. Statutory Authority: RCW 70.54.270, 43.20.-050, 43.70.130.

246-430-040 Form, frequency, and format for reporting. [Statutory Authority: RCW 70.54.230 through 70.54.270. 92-01-050 (Order 209), § 246-430-040, filed 12/10/91, effective 1/10/92.] Repealed by 01-04-086, filed 2/7/01, effective 3/10/01. Statutory Authority: RCW 70.54.-270, 43.20.050, 43.70.130.

246-430-050 Data quality assurance. [Statutory Authority: RCW 70.54.230 through 70.54.270. 92-01-050 (Order 209), § 246-430-050, filed 12/10/91, effective 1/10/92.] Repealed by 01-04-086, filed 2/7/01, effective 3/10/01. Statutory Authority: RCW 70.54.270, 43.20.050, 43.70.130.

246-430-060 Access and release of information. [Statutory Authority: RCW 70.54.230 through 70.54.270. 92-01-050 (Order 209), § 246-430-060, filed 12/10/91, effective 1/10/92.] Repealed by 01-04-086, filed 2/7/01, effective 3/10/01. Statutory Authority: RCW 70.54.270, 43.20.050, 43.70.130.

Chapter 246-450
HOSPITAL DATA—PUBLIC RECORDS

246-450-001 Purpose. [Statutory Authority: RCW 43.70.040. 91-02-049 (Order 121), recodified as § 246-450-001, filed 12/27/90, effective 1/31/91; Order 73-01, § 261-06-010, filed 1/11/74.] Repealed by 94-12-089, filed 6/1/94, effective 7/2/94. Statutory Authority: Chapters 43.070 [43.70] and 70.170 RCW.

246-450-010 Definitions. [Statutory Authority: RCW 43.70.040. 91-02-049 (Order 121), recodified as § 246-450-010, filed 12/27/90, effective 1/31/91. Statutory Authority: Chapter 70.39 RCW. 83-06-036 (Order 83-02, Resolution No. 83-02), § 261-06-020, filed 2/28/83; Order 73-01, § 261-06-020, filed 1/11/74.] Repealed by 94-12-089, filed 6/1/94, effective 7/2/94. Statutory Authority: Chapters 43.070 [43.70] and 70.170 RCW.

246-450-020 Public records available. [Statutory Authority: RCW 43.70.040. 91-02-049 (Order 121), recodified as § 246-450-020, filed 12/27/90, effective 1/31/91. Statutory Authority: Chapter 70.39 RCW. 84-20-066 (Order 84-05, Resolution No. 84-05), § 261-06-030, filed 10/1/84; 83-06-036 (Order 83-02, Resolution No. 83-02), § 261-06-030, filed 2/28/83; Order 73-01, § 261-06-030, filed 1/11/74.] Repealed by 94-12-089, filed 6/1/94, effective 7/2/94. Statutory Authority: Chapters 43.070 [43.70] and 70.170 RCW.

246-450-030 Public records officer. [Statutory Authority: RCW 43.70.040. 91-02-049 (Order 121), recodified as § 246-450-030, filed 12/27/90, effective 1/31/91. Statutory Authority: Chapter 70.39 RCW. 84-20-066 (Order 84-05, Resolution No. 84-05), § 261-06-040, filed 10/1/84; Order 73-01, § 261-06-040, filed 1/11/74.] Repealed by 94-12-089, filed 6/1/94, effective 7/2/94. Statutory Authority: Chapters 43.070 [43.70] and 70.170 RCW.

246-450-040 Office hours. [Statutory Authority: RCW 43.70.040. 91-02-049 (Order 121), recodified as § 246-450-040, filed 12/27/90, effective 1/31/91. Statutory Authority: Chapter 70.39 RCW. 83-06-036 (Order 83-02, Resolution No. 83-02), § 261-06-050, filed 2/28/83; Order 73-01, § 261-06-050, filed 1/11/74.] Repealed by 94-12-089, filed 6/1/94, effective 7/2/94. Statutory Authority: Chapters 43.070 [43.70] and 70.170 RCW.

246-450-050 Requests for public records. [Statutory Authority: RCW 43.70.040. 91-02-049 (Order 121), recodified as § 246-450-050, filed 12/27/90, effective 1/31/91. Statutory Authority: Chapter 70.39 RCW. 83-06-036 (Order 83-02, Resolution No. 83-02), § 261-06-060, filed 2/28/83; Order 73-01, § 261-06-060, filed 1/11/74.] Repealed by 94-12-089, filed 6/1/94, effective 7/2/94. Statutory Authority: Chapters 43.070 [43.70] and 70.170 RCW.

246-450-060 Inspection and copying. [Statutory Authority: RCW 43.70.040. 91-02-049 (Order 121), recodified as § 246-450-060, filed 12/27/90, effective 1/31/91. Statutory Authority: RCW 42.17.250 through 42.17.340 and chapter 70.39 RCW. 87-22-005 (Order 87-03, Resolution No. 87-03), § 261-06-070, filed 10/23/87. Statutory Authority: Chapter 70.39 RCW. 83-06-036 (Order 83-02, Resolution No. 83-02), § 261-06-070, filed 2/28/83; Order 73-01, § 261-06-070, filed 1/11/74.] Repealed by 94-12-089, filed 6/1/94, effective 7/2/94. Statutory Authority: Chapters 43.070 [43.70] and 70.170 RCW.

246-450-070 Exemptions. [Statutory Authority: RCW 43.70.040. 91-02-049 (Order 121), recodified as § 246-450-070, filed 12/27/90, effective 1/31/91. Statutory Authority: RCW 42.17.250 through 42.17.340 and chapter 70.39 RCW. 87-22-005 (Order 87-03, Resolution No. 87-03), § 261-06-080, filed 10/23/87. Statutory Authority: Chapter 70.39 RCW. 83-06-036 (Order 83-02, Resolution No. 83-02), § 261-06-080, filed 2/28/83; Order 73-01, § 261-06-080, filed 1/11/74.] Repealed by 94-12-089, filed 6/1/94, effective 7/2/94. Statutory Authority: Chapters 43.070 [43.70] and 70.170 RCW.

246-450-080 Review of denials of public records requests. [Statutory Authority: RCW 43.70.040. 91-02-049 (Order 121), recodified as § 246-450-080, filed 12/27/90, effective 1/31/91. Statutory Authority: RCW 42.17.250 through 42.17.340 and chapter 70.39 RCW. 87-22-005 (Order 87-03, Resolution No. 87-03), § 261-06-090, filed 10/23/87. Statutory Authority: Chapter 70.39 RCW. 83-06-036 (Order 83-02, Resolution No. 83-02), § 261-06-090, filed 2/28/83; Order 73-01, § 261-06-090, filed 1/11/74.] Repealed by 94-12-089, filed 6/1/94, effective 7/2/94. Statutory Authority: Chapters 43.070 [43.70] and 70.170 RCW.

246-450-090 Protection of public records. [Statutory Authority: RCW 43.70.040. 91-02-049 (Order 121), recodified as § 246-450-090, filed 12/27/90, effective 1/31/91. Statutory Authority: Chapter 70.39 RCW. 83-06-036 (Order 83-02, Resolution No. 83-02), § 261-06-100, filed 2/28/83; Order 73-01, § 261-06-100, filed 1/11/74.] Repealed by 94-12-089, filed 6/1/94, effective 7/2/94. Statutory Authority: Chapters 43.070 [43.70] and 70.170 RCW.

246-450-100 Records index. [Statutory Authority: RCW 43.70.040. 91-02-049 (Order 121), recodified as § 246-450-100, filed 12/27/90, effective 1/31/91. Statutory Authority: RCW 42.17.250 through 42.17.340 and chapter 70.39 RCW. 87-22-005 (Order 87-03, Resolution No. 87-03), § 261-06-110, filed 10/23/87; Order 73-01, § 261-06-110, filed 1/11/74.] Repealed by 94-12-089, filed 6/1/94, effective 7/2/94. Statutory Authority: Chapters 43.070 [43.70] and 70.170 RCW.

Chapter 246-452
HOSPITAL PRICE INFORMATION REPORTING

246-452-001 Purpose. [Statutory Authority: RCW 43.70.040. 91-02-049 (Order 121), recodified as § 246-452-001, filed 12/27/90, effective 1/31/91; Order 76-01, § 261-12-010, filed 2/13/76; Order 74-07, § 261-12-010, filed 5/10/74.] Repealed by 94-12-089, filed 6/1/94, effective 7/2/94. Statutory Authority: Chapters 43.070 [43.70] and 70.170 RCW.

246-452-010 Definitions. [Statutory Authority: RCW 43.70.040. 91-02-049 (Order 121), recodified as § 246-452-010, filed 12/27/90, effective 1/31/91. Statutory Authority: Chapter 70.39 RCW. 84-20-066 (Order 84-05, Resolution No. 84-05), § 261-12-020, filed 10/1/84; Order 76-01, § 261-12-020, filed 2/13/76; Order 74-07, § 261-12-020, filed 5/10/74.] Repealed by 94-12-089, filed 6/1/94, effective 7/2/94. Statutory Authority: Chapters 43.070 [43.70] and 70.170 RCW.

246-452-020 Report of changes in or new prices—Reporting form. [Statutory Authority: RCW 43.70.040. 91-02-049 (Order 121), recodified as § 246-452-020, filed 12/27/90, effective 1/31/91. Statutory Authority: Chapter 70.39 RCW. 83-06-036 (Order 83-02, Resolution No. 83-02), § 261-12-040, filed 2/28/83; Order 76-01, § 261-12-040, filed 2/13/76; Order 74-07, § 261-12-040, filed 5/10/74.] Repealed by 94-12-089, filed 6/1/94, effective 7/2/94. Statutory Authority: Chapters 43.070 [43.70] and 70.170 RCW.

246-452-030 Information regarding pricing policy. [Statutory Authority: RCW 43.70.040. 91-02-049 (Order 121), recodified as § 246-452-030, filed 12/27/90, effective 1/31/91. Statutory Authority: Chapter 70.39 RCW. 83-06-036 (Order 83-02, Resolution No. 83-02), § 261-12-050, filed 2/28/83; Order 76-01, § 261-12-050, filed 2/13/76; Order 74-07, § 261-12-050, filed 5/10/74.] Repealed by 94-12-089, filed 6/1/94, effective 7/2/94. Statutory Authority: Chapters 43.070 [43.70] and 70.170 RCW.

246-452-040 Time deadline for submission of report. [Statutory Authority: RCW 43.70.040. 91-02-049 (Order 121), recodified as § 246-452-040, filed 12/27/90, effective 1/31/91. Statutory Authority: Chapter 70.39 RCW. 83-06-036 (Order 83-02, Resolution No. 83-02), § 261-12-055, filed 2/28/83; Order 76-01, § 261-12-055, filed 2/13/76.] Repealed by 94-12-089, filed 6/1/94, effective 7/2/94. Statutory Authority: Chapters 43.070 [43.70] and 70.170 RCW.

246-452-050 Changes in contracts. [Statutory Authority: RCW 43.70.040. 91-02-049 (Order 121), recodified as § 246-452-050, filed 12/27/90, effective 1/31/91; Order 74-07, § 261-12-060, filed 5/10/74.] Repealed by 94-12-089, filed 6/1/94, effective 7/2/94. Statutory Authority: Chapters 43.070 [43.70] and 70.170 RCW.

246-452-060 Additional information request. [Statutory Authority: RCW 43.70.040. 91-02-049 (Order 121), recodified as § 246-452-060, filed 12/27/90, effective 1/31/91; Order 76-01, § 261-12-070, filed 2/13/76.] Repealed by 94-12-089, filed 6/1/94, effective 7/2/94. Statutory Authority: Chapters 43.070 [43.70] and 70.170 RCW.

246-452-070 Commission review and response to reports. [Statutory Authority: RCW 43.70.040. 91-02-049 (Order 121), recodified as § 246-452-070, filed 12/27/90, effective 1/31/91; Order 76-01, § 261-12-080, filed 2/13/76.] Repealed by 94-12-089, filed 6/1/94, effective 7/2/94. Statutory Authority: Chapters 43.070 [43.70] and 70.170 RCW.

246-452-080 Penalties for violation. [Statutory Authority: RCW 43.70.040. 91-02-049 (Order 121), recodified as § 246-452-080, filed 12/27/90, effective 1/31/91. Statutory Authority: RCW 70.39.180. 86-11-041 (Order 86-01, Resolution No. 86-01), § 261-12-090, filed 5/16/86.] Repealed by 94-12-089, filed 6/1/94, effective 7/2/94. Statutory Authority: Chapters 43.070 [43.70] and 70.170 RCW.

Chapter 246-510
STANDARDS FOR COMMUNITY HEALTH CLINICS

246-510-001 Purpose. [Statutory Authority: RCW 43.70.040. 91-02-049 (Order 121), recodified as § 246-510-001, filed 12/27/90, effective 1/31/91. Statutory Authority: 1989 1st ex.s. c 19 § 214. 90-04-082 (Order 027), § 248-170-001, filed 2/6/90, effective 3/9/90.] Repealed by 97-20-101, filed 9/29/97, effective 10/30/97. Statutory Authority: RCW 43.70.040.

246-510-010 Definitions. [Statutory Authority: RCW 43.70.040. 91-02-049 (Order 121), recodified as § 246-510-010, filed 12/27/90, effective 1/31/91. Statutory Authority: 1989 1st ex.s. c 19 § 214. 90-04-082 (Order 027), § 248-170-020, filed 2/6/90, effective 3/9/90.] Repealed by 97-20-101, filed 9/29/97, effective 10/30/97. Statutory Authority: RCW 43.70.040.

246-510-100 Administration. [Statutory Authority: 1989 c 19 § 214(3). 92-02-018 (Order 224), § 246-510-100, filed 12/23/91, effective 1/23/92. Statutory Authority: RCW 43.70.040. 91-02-049 (Order 121), recodified as § 246-510-100, filed 12/27/90, effective 1/31/91. Statutory Authority: 1989 1st ex.s. c 19 § 214. 90-04-082 (Order 027), § 248-170-100, filed 2/6/90, effective 3/9/90.] Repealed by 97-20-101, filed 9/29/97, effective 10/30/97. Statutory Authority: RCW 43.70.040.

246-510-130 Application for funds. [Statutory Authority: 1989 c 19 § 214(3). 92-02-018 (Order 224), § 246-510-130, filed 12/23/91, effective 1/23/92. Statutory Authority: RCW 43.70.040. 91-02-049 (Order 121), recodified as § 246-510-130, filed 12/27/90, effective 1/31/91. Statutory Authority: 1989 1st ex.s. c 19 § 214. 90-04-082 (Order 027), § 248-170-130, filed 2/6/90, effective 3/9/90.] Repealed by 97-20-101, filed 9/29/97, effective 10/30/97. Statutory Authority: RCW 43.70.040.

246-510-160 Eligibility. [Statutory Authority: 1989 c 19 § 214(3). 92-02-018 (Order 224), § 246-510-160, filed 12/23/91, effective 1/23/92. Statutory Authority: RCW 43.70.040. 91-02-049 (Order 121), recodified as § 246-510-160, filed 12/27/90, effective 1/31/91. Statutory Authority: 1989 1st ex.s. c 19 § 214. 90-04-082 (Order 027), § 248-170-160, filed 2/6/90, effective 3/9/90.] Repealed by 97-20-101, filed 9/29/97, effective 10/30/97. Statutory Authority: RCW 43.70.040.

246-510-200 Allocation of state funds. [Statutory Authority: RCW 43.70.040. 91-02-049 (Order 121), recodified as § 246-510-200, filed 12/27/90, effective 1/31/91. Statutory Authority: 1989 1st ex.s. c 19 § 214. 90-04-082 (Order 027), § 248-170-200, filed 2/6/90, effective 3/9/90.] Repealed by 97-20-101, filed 9/29/97, effective 10/30/97. Statutory Authority: RCW 43.70.040.

246-510-300 Dispute resolution procedures. [Statutory Authority: RCW 43.70.040. 91-02-049 (Order 121), recodified as § 246-510-300, filed 12/27/90, effective 1/31/91. Statutory Authority: 1989 1st ex.s. c 19 § 214. 90-04-082 (Order 027), § 248-170-300, filed 2/6/90, effective 3/9/90.] Repealed by 97-20-101, filed 9/29/97, effective 10/30/97. Statutory Authority: RCW 43.70.040.

246-510-320 Audit review. [Statutory Authority: RCW 43.70.040. 91-02-049 (Order 121), recodified as § 246-510-320, filed 12/27/90, effective 1/31/91. Statutory Authority: 1989 1st ex.s. c 19 § 214. 90-04-082 (Order 027), § 248-170-320, filed 2/6/90, effective 3/9/90.] Repealed by 97-20-101, filed 9/29/97, effective 10/30/97. Statutory Authority: RCW 43.70.040.

246-510-400 Limitations on awards. [Statutory Authority: RCW 43.70.040 and 1989 sp.s. c 19 § 214. 92-14-055 (Order 282), § 246-510-400, filed 6/25/92, effective 6/30/92.] Repealed by 97-20-101, filed 9/29/97, effective 10/30/97. Statutory Authority: RCW 43.70.040.

Chapter 246-520
KIDNEY CENTERS

246-520-001 Purpose. [Statutory Authority: RCW 43.20.050. 92-02-019 (Order 225B), § 246-520-001, filed 12/23/91, effective 1/23/92; 91-02-051 (Order 124B), recodified as § 246-520-001, filed 12/27/90, effective 1/31/91; 80-06-065 (Order 198), § 248-30-070, filed 5/22/80.] Repealed by 94-05-052, filed 2/10/94, effective 3/13/94. Statutory Authority: RCW 43.20.050

246-520-010 Definitions. [Statutory Authority: RCW 43.20.050. 92-02-019 (Order 225B), § 246-520-010, filed 12/23/91, effective 1/23/92; 91-02-051 (Order 124B), recodified as § 246-520-010, filed 12/27/90, effective 1/31/91; 85-03-063 (Order 279), § 248-30-080, filed 1/15/85; 83-18-002 (Order 265), § 248-30-080, filed 8/25/83; 80-06-065 (Order 198), § 248-30-080, filed 5/22/80.] Repealed by 94-05-052, filed 2/10/94, effective 3/13/94. Statutory Authority: RCW 43.20.050

246-520-020 Services. [Statutory Authority: RCW 43.20.050. 92-02-019 (Order 225B), § 246-520-020, filed 12/23/91, effective 1/23/92; 91-02-051 (Order 124B), recodified as §

246-520-020, filed 12/27/90, effective 1/31/91; 80-06-065 (Order 198), § 248-30-090, filed 5/22/80.] Repealed by 94-05-052, filed 2/10/94, effective 3/13/94. Statutory Authority: RCW 43.20.050

246-520-030 Reimbursement. [Statutory Authority: RCW 43.20.050. 92-02-019 (Order 225B), § 246-520-030, filed 12/23/91, effective 1/23/92; 91-02-051 (Order 124B), recodified as § 246-520-030, filed 12/27/90, effective 1/31/91; 83-18-002 (Order 265), § 248-30-100, filed 8/25/83; 80-06-065 (Order 198), § 248-30-100, filed 5/22/80.] Repealed by 94-05-052, filed 2/10/94, effective 3/13/94. Statutory Authority: RCW 43.20.050

246-520-040 Eligibility. [Statutory Authority: RCW 43.20.050. 92-02-019 (Order 225B), § 246-520-040, filed 12/23/91, effective 1/23/92; 91-02-051 (Order 124B), recodified as § 246-520-040, filed 12/27/90, effective 1/31/91; 85-03-063 (Order 279), § 248-30-110, filed 1/15/85; 83-18-002 (Order 265), § 248-30-110, filed 8/25/83. Statutory Authority: RCW 43.20.050 and SB 5021. 82-19-070 (Order 243), § 248-30-110, filed 9/20/82. Statutory Authority: RCW 43.20.050. 80-06-065 (Order 198), § 248-30-110, filed 5/22/80.] Repealed by 94-05-052, filed 2/10/94, effective 3/13/94. Statutory Authority: RCW 43.20.050

246-520-050 Transfer of resources without adequate consideration. [Statutory Authority: RCW 43.20.050. 92-02-019 (Order 225B), § 246-520-050, filed 12/23/91, effective 1/23/92; 91-02-051 (Order 124B), recodified as § 246-520-050, filed 12/27/90, effective 1/31/91; 85-03-063 (Order 279), § 248-30-115, filed 1/15/85.] Repealed by 94-05-052, filed 2/10/94, effective 3/13/94. Statutory Authority: RCW 43.20.050

246-520-060 Fiscal information. [Statutory Authority: RCW 43.20.-050. 92-02-019 (Order 225B), § 246-520-060, filed 12/23/91, effective 1/23/92; 91-02-051 (Order 124B), recodified as § 246-520-060, filed 12/27/90, effective 1/31/91; 80-06-065 (Order 198), § 248-30-120, filed 5/22/80.] Repealed by 94-05-052, filed 2/10/94, effective 3/13/94. Statutory Authority: RCW 43.20.050

246-520-070 Procedures for eligibility determination. [Statutory Authority: RCW 43.20.050. 92-02-019 (Order 225B), § 246-520-070, filed 12/23/91, effective 1/23/92; 91-02-051 (Order 124B), recodified as § 246-520-070, filed 12/27/90, effective 1/31/91; 85-03-063 (Order 279), § 248-30-130, filed 1/15/85; 83-18-002 (Order 265), § 248-30-130, filed 8/25/83.] Repealed by 94-05-052, filed 2/10/94, effective 3/13/94. Statutory Authority: RCW 43.20.050

Chapter 246-610
CYTOGENETIC LABORATORY SERVICES

246-610-010 Definitions. [Statutory Authority: RCW 43.20.050. 91-02-051 (Order 124B), recodified as § 246-610-010, filed 12/27/90, effective 1/31/91; 83-12-049 (Order 258), § 248-160-010, filed 6/1/83.] Repealed by 96-19-043, filed 9/12/96, effective 10/13/96. Statutory Authority: RCW 43.20.050.

246-610-020 Performance of cytogenetic laboratory procedures. [Statutory Authority: RCW 43.20.050. 91-02-051 (Order 124B), recodified as § 246-610-020, filed 12/27/90, effective 1/31/91; 83-12-049 (Order 258), § 248-160-020, filed 6/1/83.] Repealed by 96-19-043, filed 9/12/96, effective 10/13/96. Statutory Authority: RCW 43.20.050.

246-610-030 Fees. [Statutory Authority: RCW 43.20.050. 91-02-051 (Order 124B), recodified as § 246-610-030, filed 12/27/90, effective 1/31/91; 83-12-049 (Order 258), § 248-160-030, filed 6/1/83.] Repealed by 96-19-043, filed 9/12/96, effective 10/13/96. Statutory Authority: RCW 43.20.050.

246-610-040 Eligibility for reduced fee or no-fee services. [Statutory Authority: RCW 43.20.050. 91-02-051 (Order 124B), recodified as § 246-610-040, filed 12/27/90, effective 1/31/91; 83-12-049 (Order 258), § 248-160-040, filed 6/1/83.] Repealed by 96-19-043, filed 9/12/96, effective 10/13/96. Statutory Authority: RCW 43.20.050.

Chapter 246-806
CHIROPRACTIC, DOCTORS OF—BOARD OF CHIROPRACTIC EXAMINERS

246-806-010 Definitions. [Statutory Authority: RCW 18.25.017. 91-05-026 (Order 111B), recodified as § 246-806-010, filed 2/12/91, effective 3/15/91. Statutory Authority: RCW 18.25.025. 81-05-004 (Order PL 371), § 114-12-021, filed 2/6/81.] Repealed by 96-16-074, filed 8/6/96, effective 9/6/96. Statutory Authority: Chapter 18.25 RCW.

246-806-020 Colleges—Policy. [Statutory Authority: RCW 18.25.-017. 91-05-026 (Order 111B), recodified as § 246-806-020, filed 2/12/91, effective 3/15/91. Statutory Authority: RCW 18.25.025. 81-05-004 (Order PL 371), § 114-12-011, filed 2/6/81.] Repealed by 96-16-074, filed 8/6/96, effective 9/6/96. Statutory Authority: Chapter 18.25 RCW.

246-806-030 Accreditation of colleges—Procedure. [Statutory Authority: RCW 18.25.017. 91-05-026 (Order 111B), recodified as § 246-806-030, filed 2/12/91, effective 3/15/91. Statutory Authority: RCW 18.25.025. 81-05-004 (Order PL 371), § 114-12-031, filed 2/6/81.] Repealed by 96-16-074, filed 8/6/96, effective 9/6/96. Statutory Authority: Chapter 18.25 RCW.

246-806-040 Colleges—Educational standards required for accreditation. [Statutory Authority: RCW 18.25.017. 91-05-026 (Order 111B), recodified as § 246-806-040, filed 2/12/91, effective 3/15/91; 87-24-063 (Order PM 692), § 114-12-041, filed 12/1/87. Statutory Authority: RCW 18.25.025. 83-01-028 (Order PL 414), § 114-12-041, filed 12/8/82; 81-22-078 (Order PL 385), § 114-12-041, filed 11/4/81; 81-05-004 (Order PL 371), § 114-12-041, filed 2/6/81.] Repealed by 96-16-074, filed 8/6/96, effective 9/6/96. Statutory Authority: Chapter 18.25 RCW.

246-806-050 Examination review and appeal procedures. [Statutory Authority: RCW 18.25.017. 91-05-026 (Order 111B), recodified as § 246-806-050, filed 2/12/91, effective 3/15/91; 86-06-043 (Order PL 582), § 114-12-115, filed 3/4/86.] Repealed by 92-17-026 (Order 297B), filed 8/11/92, effective 9/11/92. Statutory Authority: RCW 18.25.017.

246-806-060 Examinations. [Statutory Authority: RCW 18.25.017. 92-17-026 (Order 297B), § 246-806-060, filed 8/11/92, effective 9/11/92; 91-05-026 (Order 111B), recodified as § 246-806-060, filed 2/12/91, effective 3/15/91; 89-18-085 (Order PM 861), § 114-12-126, filed 9/6/89, effective 10/7/89.] Repealed by 96-16-074, filed 8/6/96, effective 9/6/96. Statutory Authority: Chapter 18.25 RCW.

246-806-070 Chiropractic examination scores. [Statutory Authority: RCW 18.25.017. 92-17-026 (Order 297B), § 246-806-070, filed 8/11/92, effective 9/11/92; 91-05-026 (Order 111B), recodified as § 246-806-070, filed 2/12/91, effective 3/15/91; 89-21-058, § 114-12-132, filed 10/16/89, effective 11/16/89; 87-24-063 (Order PM 692), § 114-12-132, filed 12/1/87.] Repealed by 96-16-074, filed 8/6/96, effective 9/6/96. Statutory Authority: Chapter 18.25 RCW.

246-806-075 Adjudicative proceedings—Procedural rules for the board of chiropractic examiners. [Statutory Authority: RCW 18.25.017 and 18.25.020. 93-20-061, § 246-806-075, filed 10/1/93, effective 11/1/93.] Repealed by 96-16-074, filed 8/6/96, effective 9/6/96. Statutory Authority: Chapter 18.25 RCW.

246-806-080 Licensees residing and practicing out-of-state—Continuing education requirements. [Statutory Authority: RCW 18.25.017. 91-05-026 (Order 111B), recodified as § 246-806-080, filed 2/12/91, effective 3/15/91. Statutory Authority: RCW 18.25.017 and 18.25.070. 80-11-073 (Order PL 355), § 114-12-150, filed 8/20/80.] Repealed by 96-16-074, filed 8/6/96, effective 9/6/96. Statutory Authority: Chapter 18.25 RCW.

246-806-085 Thirty-day permit. [Statutory Authority: RCW 18.25.-017. 92-17-026 (Order 297B), § 246-806-085, filed 8/11/92, effective 9/11/92.] Repealed by 96-16-074, filed 8/6/96, effective 9/6/96. Statutory Authority: Chapter 18.25 RCW.

246-806-090 Board approved continuing education. [Statutory Authority: RCW 18.25.017. 92-17-026 (Order 297B), § 246-806-090, filed 8/11/92, effective 9/11/92; 91-05-026 (Order 111B), recodified as § 246-806-090, filed 2/12/91, effective 3/15/91. Statutory Authority: RCW 18.25.070 and 18.25.075. 90-22-036 (Order 096B), § 114-12-155, filed 11/1/90, effective 12/2/90. Statutory Authority: RCW 18.25.017. 89-18-086, § 114-12-155, filed 9/6/89, effective 10/7/89; 86-06-043 (Order PL 582), § 114-12-155, filed 3/4/86.] Repealed by 96-16-074, filed 8/6/96, effective 9/6/96. Statutory Authority: Chapter 18.25 RCW.

246-806-100 Prior approval not required. [Statutory Authority: RCW 18.25.017 and 18.25.020. 93-09-055 (Order 356B), § 246-806-100, filed 4/19/93, effective 5/20/93. Statutory Authority: RCW 18.25.017. 91-05-026 (Order 111B), recodified as § 246-806-100, filed 2/12/91, effective 3/15/91; 89-18-085 (Order PM 861), § 114-12-164, filed 9/6/89, effective 10/7/89.] Repealed by 96-16-074, filed 8/6/96, effective 9/6/96. Statutory Authority: Chapter 18.25 RCW.

246-806-110 License renewal—Affidavit of compliance with continuing education requirements. [Statutory Authority: RCW 18.25.017 and 18.25.020. 93-09-055 (Order 356B), § 246-806-110, filed 4/19/93, effective 5/20/93. Statutory Authority: RCW 18.25.017. 91-05-026 (Order 111B), recodified as § 246-806-110, filed 2/12/91, effective 3/15/91; 89-18-085 (Order PM 861), § 114-12-170, filed 9/6/89, effective 10/7/89; 88-17-084 (Order PM 764), § 114-12-170, filed 8/22/88. Statutory Authority: RCW 18.25.017 and 18.25.070. 80-11-073 (Order PL 355), § 114-12-170, filed 8/20/80.] Repealed by 96-16-074, filed 8/6/96, effective 9/6/96. Statutory Authority: Chapter 18.25 RCW.

246-806-120 Exemptions. [Statutory Authority: RCW 18.25.017. 91-05-026 (Order 111B), recodified as § 246-806-120, filed 2/12/91, effective 3/15/91; 80-17-019 (Order PL 362), § 114-12-180, filed 11/13/80.] Repealed by 96-16-074, filed 8/6/96, effective 9/6/96. Statutory Authority: Chapter 18.25 RCW.

246-806-130 Lapsed and inactive licenses—Requirements for reinstating or activating a license. [Statutory Authority: RCW 18.25.017 and 18.25.020. 93-09-055 (Order 356B), § 246-806-130, filed 4/19/93, effective 5/20/93. Statutory Authority: RCW 18.25.017. 91-05-026 (Order 111B), recodified as § 246-806-130, filed 2/12/91, effective 3/15/91. Statutory Authority: RCW 18.25.070 and 18.25.075. 90-22-036 (Order 096B), § 114-12-190, filed 11/1/90, effective 12/2/90. Statutory Authority: RCW 18.25.017. 89-18-085 (Order PM 861), § 114-12-190, filed 9/6/89, effective 10/7/89.] Repealed by 96-16-074, filed 8/6/96, effective 9/6/96. Statutory Authority: Chapter 18.25 RCW.

246-806-140 AIDS prevention and information education requirements. [Statutory Authority: RCW 18.25.017 and 18.25.020. 93-09-055 (Order 356B), § 246-806-140, filed 4/19/93, effective 5/20/93. Statutory Authority: RCW 18.25.017. 91-05-026 (Order 111B), recodified as § 246-806-140, filed 2/12/91, effective 3/15/91. Statutory Authority: RCW 70.24.270. 88-23-060 (Order PM 799), § 114-12-200, filed 11/15/88.] Repealed by 96-16-074, filed 8/6/96, effective 9/6/96. Statutory Authority: Chapter 18.25 RCW.

246-806-150 Temporary permits—Recognized jurisdictions. [Statutory Authority: RCW 18.26.110. 92-02-022 (Order 229B), § 246-806-150, filed 12/23/91, effective 1/23/92.] Repealed by 93-09-055 (Order 356B), filed 4/19/93, effective 5/20/93. Statutory Authority: RCW 18.25.017 and 18.25.020.

246-806-160 Temporary permits—Issuance and duration. [Statutory Authority: RCW 18.25.017 and 18.25.020. 93-09-055 (Order 356B), § 246-806-160, filed 4/19/93, effective 5/20/93. Statutory Authority: RCW 18.26.110. 92-02-022 (Order 229B), § 246-806-160, filed 12/23/91, effective 1/23/92.] Repealed by 96-16-074, filed 8/6/96, effective 9/6/96. Statutory Authority: Chapter 18.25 RCW.

246-806-170 Licensure by endorsement. [Statutory Authority: RCW 18.26.110. 92-02-022 (Order 229B), § 246-806-170, filed 12/23/91, effective 1/23/92.] Repealed by 96-16-074, filed 8/6/96, effective 9/6/96. Statutory Authority: Chapter 18.25 RCW.

246-806-180 Preceptor or direct supervisory doctor. [Statutory Authority: RCW 18.25.017. 92-17-026 (Order 297B), § 246-806-180, filed 8/11/92, effective 9/11/92. Statutory Authority: RCW 18.26.110. 92-02-022 (Order 229B), § 246-806-180, filed 12/23/91, effective 1/23/92.] Repealed by 96-16-074, filed 8/6/96, effective 9/6/96. Statutory Authority: Chapter 18.25 RCW.

246-806-190 Registration of chiropractic X-ray technicians. [Statutory Authority: RCW 18.25.017 and 18.25.020. 93-09-055 (Order 356B), § 246-806-190, filed 4/19/93, effective 5/20/93. Statutory Authority: RCW 18.26.110. 92-02-022 (Order 229B), § 246-806-190, filed 12/23/91, effective 1/23/92.] Repealed by 96-16-074, filed 8/6/96, effective 9/6/96. Statutory Authority: Chapter 18.25 RCW.

246-806-990 Chiropractic fees. [Statutory Authority: RCW 43.70.-250. 92-07-017 (Order 251), § 246-806-990, filed 3/9/92, effective 4/9/92; 91-21-096 (Order 207), § 246-806-990, filed 10/21/91, effective 11/21/91. Statutory Authority: RCW 43.70.040. 91-05-031 (Order 136), recodified as § 246-806-990, filed 2/12/91, effective 3/15/91. Statutory Authority: RCW 43.70.250. 90-04-094 (Order 029), § 114-12-136, filed 2/7/90, effective 3/10/90. Statutory Authority: RCW 43.24.086. 87-10-028 (Order PM 650), § 114-12-136, filed 5/1/87; 83-22-060 (Order PL 446), § 114-12-136, filed 11/2/83. Formerly WAC 114-12-135.] Repealed by 96-16-074, filed 8/6/96, effective 9/6/96. Statutory Authority: Chapter 18.25 RCW.

Chapter 246-807
CHIROPRACTIC, DOCTORS OF—CHIROPRACTIC DISCIPLINARY BOARD

246-807-020 Privileged communications. [Statutory Authority: RCW 18.26.110. 91-05-095 (Order 110B), recodified as § 246-807-020, filed 2/20/91, effective 3/23/91; Order PL 235, § 113-10-010, filed 12/31/75.] Repealed by 96-16-074, filed 8/6/96, effective 9/6/96. Statutory Authority: Chapter 18.25 RCW.

246-807-030 Patient abandonment. [Statutory Authority: RCW 18.26.110. 91-05-095 (Order 110B), recodified as § 246-807-030, filed 2/20/91, effective 3/23/91; Order PL 235, § 113-10-020, filed 12/31/75.] Repealed by 96-16-074, filed 8/6/96, effective 9/6/96. Statutory Authority: Chapter 18.25 RCW.

246-807-040 Consultation. [Statutory Authority: RCW 18.26.110. 91-05-095 (Order 110B), recodified as § 246-807-040, filed 2/20/91, effective 3/23/91; Order PL 235, § 113-10-030, filed 12/31/75.] Repealed by 96-16-074, filed 8/6/96, effective 9/6/96. Statutory Authority: Chapter 18.25 RCW.

246-807-050 Unethical requests. [Statutory Authority: RCW 18.26.110. 91-05-095 (Order 110B), recodified as § 246-807-050, filed 2/20/91, effective 3/23/91; Order PL 235, § 113-10-040, filed 12/31/75.] Repealed by 96-16-074, filed 8/6/96, effective 9/6/96. Statutory Authority: Chapter 18.25 RCW.

246-807-060 Patient welfare. [Statutory Authority: RCW 18.26.110. 91-05-095 (Order 110B), recodified as § 246-807-060, filed 2/20/91, effective 3/23/91; Order PL 235, § 113-10-050, filed 12/31/75.] Repealed by 96-16-074, filed 8/6/96, effective 9/6/96. Statutory Authority: Chapter 18.25 RCW.

246-807-070 Patient disclosure. [Statutory Authority: RCW 18.26.-110. 91-05-095 (Order 110B), recodified as § 246-807-070, filed 2/20/91, effective 3/23/91; Order PL 235, § 113-10-060, filed 12/31/75.] Repealed by 96-16-074, filed 8/6/96, effective 9/6/96. Statutory Authority: Chapter 18.25 RCW.

246-807-080 Degree of skill. [Statutory Authority: RCW 18.26.110. 91-05-095 (Order 110B), recodified as § 246-807-080, filed 2/20/91, effective 3/23/91; Order PL 235, § 113-10-070, filed 12/31/75.] Repealed by 96-16-074, filed 8/6/96, effective 9/6/96. Statutory Authority: Chapter 18.25 RCW.

246-807-090 Illegal practitioners. [Statutory Authority: RCW 18.26.-110. 91-05-095 (Order 110B), recodified as § 246-807-090, filed 2/20/91, effective 3/23/91; Order PL 235, § 113-10-090, filed 12/31/75.] Repealed by 96-16-074, filed 8/6/96, effective 9/6/96. Statutory Authority: Chapter 18.25 RCW.

246-807-100 Excessive professional charges. [Statutory Authority: RCW 18.26.110. 91-05-095 (Order 110B), recodified as § 246-807-100, filed 2/20/91, effective 3/23/91; 84-01-054 (Order PL 453), § 113-10-100, filed 12/16/83; Order PL 235, § 113-10-100, filed 12/31/75.] Repealed by 96-16-074, filed 8/6/96, effective 9/6/96. Statutory Authority: Chapter 18.25 RCW.

246-807-110 Disparaging other practitioners. [Statutory Authority: RCW 18.26.110. 91-05-095 (Order 110B), recodified as § 246-807-110, filed 2/20/91, effective 3/23/91; Order PL 235, § 113-10-110, filed 12/31/75.] Repealed by 96-16-074, filed 8/6/96, effective 9/6/96. Statutory Authority: Chapter 18.25 RCW.

246-807-115 Adjudicative proceedings—Procedural rules for the chiropractic disciplinary board. [Statutory Authority: RCW 18.26.110. 94-08-053, § 246-807-115, filed

4/1/94, effective 5/2/94.] Repealed by 96-16-074, filed 8/6/96, effective 9/6/96. Statutory Authority: Chapter 18.25 RCW.

246-807-120 Identification. [Statutory Authority: RCW 18.26.110. 91-05-095 (Order 110B), recodified as § 246-807-120, filed 2/20/91, effective 3/23/91; 84-01-054 (Order PL 453), § 113-12-010, filed 12/16/83; Order PL-137, § 113-12-010, filed 11/13/72; Order 8, § 113-12-010, filed 9/9/68.] Repealed by 96-16-074, filed 8/6/96, effective 9/6/96. Statutory Authority: Chapter 18.25 RCW.

246-807-125 License renewal form. [Statutory Authority: RCW 18.26.110. 94-16-012, § 246-807-125, filed 7/21/94, effective 8/21/94.] Repealed by 96-16-074, filed 8/6/96, effective 9/6/96. Statutory Authority: Chapter 18.25 RCW.

246-807-130 Health food store ownership. [Statutory Authority: RCW 18.26.110. 91-05-095 (Order 110B), recodified as § 246-807-130, filed 2/20/91, effective 3/23/91; 86-10-039 (Order PL 591), § 113-12-075, filed 5/5/86.] Repealed by 96-16-074, filed 8/6/96, effective 9/6/96. Statutory Authority: Chapter 18.25 RCW.

246-807-135 Cooperation with investigation. [Statutory Authority: RCW 18.26.110. 94-16-012, § 246-807-135, filed 7/21/94, effective 8/21/94.] Repealed by 96-16-074, filed 8/6/96, effective 9/6/96. Statutory Authority: Chapter 18.25 RCW.

246-807-140 Vitamins, minerals and food supplements. [Statutory Authority: RCW 18.26.110. 91-05-095 (Order 110B), recodified as § 246-807-140, filed 2/20/91, effective 3/23/91; 86-10-039 (Order PL 591), § 113-12-080, filed 5/5/86. Statutory Authority: RCW 18.26.110(2). 84-23-033 (Order PL 497), § 113-12-080, filed 11/15/84; Order 8, § 113-12-080, filed 9/9/68.] Repealed by 96-16-074, filed 8/6/96, effective 9/6/96. Statutory Authority: Chapter 18.25 RCW.

246-807-150 Pelvic or prostate examination prohibited. [Statutory Authority: RCW 18.26.110. 91-05-095 (Order 110B), recodified as § 246-807-150, filed 2/20/91, effective 3/23/91; 84-01-054 (Order PL 453), § 113-12-085, filed 12/16/83.] Repealed by 96-16-074, filed 8/6/96, effective 9/6/96. Statutory Authority: Chapter 18.25 RCW.

246-807-160 Intravaginal adjustment restricted. [Statutory Authority: RCW 18.26.110. 91-05-095 (Order 110B), recodified as § 246-807-160, filed 2/20/91, effective 3/23/91. Statutory Authority: RCW 18.130.050(1). 87-05-064 (Order PM 640), § 113-12-087, filed 2/18/87.] Repealed by 96-16-074, filed 8/6/96, effective 9/6/96. Statutory Authority: Chapter 18.25 RCW.

246-807-170 Billing. [Statutory Authority: RCW 18.26.110. 91-05-095 (Order 110B), recodified as § 246-807-170, filed 2/20/91, effective 3/23/91; 89-01-017 (Order PM 806), § 113-12-101, filed 12/9/88, effective 2/1/89.] Repealed by 91-10-051 (Order 162B), filed 4/26/91, effective 5/27/91. Statutory Authority: RCW 18.26.110 and 18.130.050.

246-807-171 Billing. [Statutory Authority: RCW 18.26.110 and 18.130.050. 91-10-051 (Order 162B), § 246-807-171, filed 4/26/91, effective 5/27/91.] Repealed by 96-16-074, filed 8/6/96, effective 9/6/96. Statutory Authority: Chapter 18.25 RCW.

246-807-173 Documentation of care. [Statutory Authority: RCW 18.26.110. 94-16-012, § 246-807-173, filed 7/21/94, effective 8/21/94. Statutory Authority: RCW 18.26.110 and 18.130.050. 91-10-051 (Order 162B), § 246-807-173, filed 4/26/91, effective 5/27/91.] Repealed by 96-16-074, filed 8/6/96, effective 9/6/96. Statutory Authority: Chapter 18.25 RCW.

246-807-180 Radiographic standards. [Statutory Authority: RCW 18.26.110. 91-24-052 (Order 220B), § 246-807-180, filed 11/27/91, effective 12/28/91; 91-05-095 (Order 110B), recodified as § 246-807-180, filed 2/20/91, effective 3/23/91; 89-01-017 (Order PM 806), § 113-12-103, filed 12/9/88, effective 2/1/89.] Repealed by 96-16-074, filed 8/6/96, effective 9/6/96. Statutory Authority: Chapter 18.25 RCW.

246-807-190 Delegation of services to auxiliary staff and graduate doctors of chiropractic. [Statutory Authority: RCW 18.26.110. 91-05-095 (Order 110B), recodified as § 246-807-190, filed 2/20/91, effective 3/23/91. Statutory Authority: RCW 18.26.110 and 18.130.050. 90-22-037 (Order 097B), § 113-12-104, filed 11/1/90, effective 12/2/90.] Repealed by 96-16-074, filed 8/6/96, effective 9/6/96. Statutory Authority: Chapter 18.25 RCW.

246-807-200 Acupuncture. [Statutory Authority: RCW 18.26.110. 91-05-095 (Order 110B), recodified as § 246-807-200, filed 2/20/91, effective 3/23/91. Statutory Authority: RCW 18.130.050(1). 87-05-064 (Order PM 640), § 113-12-115, filed 2/18/87; Order PL 235, § 113-12-115, filed 12/31/75. Formerly WAC 113-12-110.] Repealed by 96-16-074, filed 8/6/96, effective 9/6/96. Statutory Authority: Chapter 18.25 RCW.

246-807-210 Future care contracts prohibited. [Statutory Authority: RCW 18.26.110. 91-05-095 (Order 110B), recodified as § 246-807-210, filed 2/20/91, effective 3/23/91; 84-01-054 (Order PL 453), § 113-12-120, filed 12/16/83. Statutory Authority: RCW 18.26.110 (1) and (2). 79-10-099 (Order PL 315), § 113-12-120, filed 9/25/79; Order PL-145, § 113-12-120, filed 6/6/73.] Repealed by 96-16-074, filed 8/6/96, effective 9/6/96. Statutory Authority: Chapter 18.25 RCW.

246-807-220 Ethical standards—Prohibited publicity and advertising. [Statutory Authority: RCW 18.26.110. 91-05-095 (Order 110B), recodified as § 246-807-220, filed 2/20/91, effective 3/23/91; 87-24-064 (Order PM 693), § 113-12-150, filed 12/1/87; 84-01-054 (Order PL 453), § 113-12-150, filed 12/16/83; 80-11-043 (Order PL-352, Resolution No. 8-80), § 113-12-150, filed 8/18/80. Statutory Authority: RCW 18.26.110 (1) and (2). 79-10-099 (Order PL 315), § 113-12-150, filed 9/25/79. Statutory Authority: RCW 18.26.110(2). 78-05-052 (Order PL 287, Resolution No. 78-142), § 113-12-150, filed 4/25/78.] Repealed by 96-16-074, filed 8/6/96, effective 9/6/96. Statutory Authority: Chapter 18.25 RCW.

246-807-230 Ethical standards—Honoring of publicity and advertisements. [Statutory Authority: RCW 18.26.110. 91-24-052 (Order 220B), § 246-807-230, filed 11/27/91, effective 12/28/91; 91-05-095 (Order 110B), recodified as § 246-807-230, filed 2/20/91, effective 3/23/91. Statutory Authority: RCW 18.26.110(2). 78-05-052 (Order PL 287, Resolution 78-142), § 113-12-165, filed 4/25/78.] Repealed by 96-16-074, filed 8/6/96, effective 9/6/96. Statutory Authority: Chapter 18.25 RCW.

246-807-240 Ethical standards—Prohibited transactions. [Statutory Authority: RCW 18.26.110. 91-05-095 (Order 110B), recodified as § 246-807-240, filed 2/20/91, effective 3/23/91. Statutory Authority: RCW 18.26.110(2). 78-05-052 (Order PL 287, Resolution 78-142), § 113-12-170, filed 4/25/78.] Repealed by 96-16-074, filed 8/6/96, effective 9/6/96. Statutory Authority: Chapter 18.25 RCW.

246-807-250 Ethical standards—Professional notices, letterheads, cards, and mailings. [Statutory Authority: RCW 18.26.-110. 91-24-052 (Order 220B), § 246-807-250, filed 11/27/91, effective 12/28/91; 91-05-095 (Order 110B), recodified as § 246-807-250, filed 2/20/91, effective 3/23/91. Statutory Authority: RCW 18.26.110(2). 78-05-052 (Order PL 287, Resolution 78-142), § 113-12-175, filed 4/25/78.] Repealed by 96-16-074, filed 8/6/96, effective 9/6/96. Statutory Authority: Chapter 18.25 RCW.

246-807-260 Ethical standards—Suggestion of need of chiropractic services. [Statutory Authority: RCW 18.26.110. 91-05-095 (Order 110B), recodified as § 246-807-260, filed 2/20/91, effective 3/23/91. Statutory Authority: RCW 18.26.110(2). 78-05-052 (Order PL 287, Resolution 78-142), § 113-12-180, filed 4/25/78.] Repealed by 96-16-074, filed 8/6/96, effective 9/6/96. Statutory Authority: Chapter 18.25 RCW.

246-807-270 Public testimonial advertising. [Statutory Authority: RCW 18.26.110. 91-05-095 (Order 110B), recodified as § 246-807-270, filed 2/20/91, effective 3/23/91. Statutory Authority: RCW 18.26.110(2). 84-23-033 (Order PL 497), § 113-12-190, filed 11/15/84.] Repealed by 96-16-074, filed 8/6/96, effective 9/6/96. Statutory Authority: Chapter 18.25 RCW.

246-807-280 Full disclosure of cost of services. [Statutory Authority: RCW 18.26.110 and chapter 18.26 RCW. 93-24-107, § 246-807-280, filed 12/1/93, effective 1/1/94. Statutory Authority: RCW 18.26.110. 91-05-095 (Order 110B), recodified as § 246-807-280, filed 2/20/91, effective 3/23/91; 89-16-095 (Order PM 852), § 113-12-195, filed 8/2/89, effective 9/2/89; 87-24-064 (Order PM 693), § 113-12-195, filed 12/1/87. Statutory Authority: RCW 18.130.050(1). 87-05-064 (Order PM 640), § 113-12-195, filed 2/18/87. Statutory Authority: RCW 18.26.110(2). 84-23-033 (Order PL 497), § 113-12-195,

filed 11/15/84.] Repealed by 96-16-074, filed 8/6/96, effective 9/6/96. Statutory Authority: Chapter 18.25 RCW.

246-807-290 Improper billing practices. [Statutory Authority: RCW 18.26.110 and chapter 18.26 RCW. 93-24-107, § 246-807-290, filed 12/1/93, effective 1/1/94. Statutory Authority: RCW 18.26.110. 91-05-095 (Order 110B), recodified as § 246-807-290, filed 2/20/91, effective 3/23/91. Statutory Authority: RCW 18.130.050(1). 87-05-064 (Order PM 640), § 113-12-197, filed 2/18/87.] Repealed by 96-16-074, filed 8/6/96, effective 9/6/96. Statutory Authority: Chapter 18.25 RCW.

246-807-300 Scope of practice—Revocation or suspension of license authorized for practice outside scope. [Statutory Authority: RCW 18.26.110. 94-16-012, § 246-807-300, filed 7/21/94, effective 8/21/94; 92-24-042 (Order 319B), § 246-807-300, filed 11/25/92, effective 12/26/92; 91-05-095 (Order 110B), recodified as § 246-807-300, filed 2/20/91, effective 3/23/91; 90-16-059 (Order 077) § 113-12-200, filed 7/27/90, effective 8/27/90; 88-17-100 (Order PM 765), § 113-12-200, filed 8/23/88; 87-24-064 (Order PM 693), § 113-12-200, filed 12/1/87. Statutory Authority: RCW 18.26.-110(2). 84-23-033 (Order PL 497), § 113-12-200, filed 11/15/84. Statutory Authority: RCW 18.26.110. 81-13-002 (Order PL 380), § 113-12-200, filed 6/4/81.] Repealed by 96-16-074, filed 8/6/96, effective 9/6/96. Statutory Authority: Chapter 18.25 RCW.

246-807-310 Clinically necessary X rays. [Statutory Authority: RCW 18.26.110. 91-05-095 (Order 110B), recodified as § 246-807-310, filed 2/20/91, effective 3/23/91. Statutory Authority: RCW 18.26.110(2). 84-23-033 (Order PL 497), § 113-12-210, filed 11/15/84.] Repealed by 96-16-074, filed 8/6/96, effective 9/6/96. Statutory Authority: Chapter 18.25 RCW.

246-807-311 Sexual misconduct. [Statutory Authority: RCW 18.26.-110 and chapter 18.26 RCW. 93-24-107, § 246-807-311, filed 12/1/93, effective 1/1/94.] Repealed by 96-16-074, filed 8/6/96, effective 9/6/96. Statutory Authority: Chapter 18.25 RCW.

246-807-320 Records and X rays and withdrawal from practice—Maintenance and retention of patient records. [Statutory Authority: RCW 18.26.110 and chapter 18.26 RCW. 93-24-107, § 246-807-320, filed 12/1/93, effective 1/1/94. Statutory Authority: RCW 18.26.110. 91-05-095 (Order 110B), recodified as § 246-807-320, filed 2/20/91, effective 3/23/91; 89-01-017 (Order PM 806), § 113-12-220, filed 12/9/88, effective 2/1/89.] Repealed by 96-16-074, filed 8/6/96, effective 9/6/96. Statutory Authority: Chapter 18.25 RCW.

246-807-330 Duties of a chiropractor who retires or withdraws from practice. [Statutory Authority: RCW 18.26.110. 91-05-095 (Order 110B), recodified as § 246-807-330, filed 2/20/91, effective 3/23/91; 89-01-017 (Order PM 806), § 113-12-230, filed 12/9/88, effective 2/1/89.] Repealed by 96-16-074, filed 8/6/96, effective 9/6/96. Statutory Authority: Chapter 18.25 RCW.

246-807-340 Mandatory reporting definitions. [Statutory Authority: RCW 18.26.110. 91-24-052 (Order 220B), § 246-807-340, filed 11/27/91, effective 12/28/91; 91-05-095 (Order 110B), recodified as § 246-807-340, filed 2/20/91, effective 3/23/91; 87-24-064 (Order PM 693), § 113-12-300, filed 12/1/87.] Repealed by 96-16-074, filed 8/6/96, effective 9/6/96. Statutory Authority: Chapter 18.25 RCW.

246-807-350 Mandatory reporting. [Statutory Authority: RCW 18.26.110. 91-05-095 (Order 110B), recodified as § 246-807-350, filed 2/20/91, effective 3/23/91; 87-24-064 (Order PM 693), § 113-12-310, filed 12/1/87.] Repealed by 96-16-074, filed 8/6/96, effective 9/6/96. Statutory Authority: Chapter 18.25 RCW.

246-807-360 Chiropractic associations or societies. [Statutory Authority: RCW 18.26.110. 91-05-095 (Order 110B), recodified as § 246-807-360, filed 2/20/91, effective 3/23/91; 87-24-064 (Order PM 693), § 113-12-320, filed 12/1/87.] Repealed by 96-16-074, filed 8/6/96, effective 9/6/96. Statutory Authority: Chapter 18.25 RCW.

246-807-370 Insurance carriers. [Statutory Authority: RCW 18.26.-110. 91-05-095 (Order 110B), recodified as § 246-807-370, filed 2/20/91, effective 3/23/91; 87-24-064 (Order PM 693), § 113-12-330, filed 12/1/87.] Repealed by 96-16-074, filed 8/6/96, effective 9/6/96. Statutory Authority: Chapter 18.25 RCW.

246-807-380 Professional liability carriers. [Statutory Authority: RCW 18.26.110. 91-05-095 (Order 110B), recodified as § 246-807-380, filed 2/20/91, effective 3/23/91; 87-24-064 (Order PM 693), § 113-12-340, filed 12/1/87.] Repealed by 96-16-074, filed 8/6/96, effective 9/6/96. Statutory Authority: Chapter 18.25 RCW.

246-807-390 Courts. [Statutory Authority: RCW 18.26.110. 91-05-095 (Order 110B), recodified as § 246-807-390, filed 2/20/91, effective 3/23/91. Statutory Authority: RCW 18.130.070. 87-24-064 (Order PM 693), § 113-12-350, filed 12/1/87.] Repealed by 96-16-074, filed 8/6/96, effective 9/6/96. Statutory Authority: Chapter 18.25 RCW.

246-807-395 State and federal agencies. [Statutory Authority: RCW 18.26.110 and chapter 18.26 RCW. 93-24-107, § 246-807-395, filed 12/1/93, effective 1/1/94.] Repealed by 96-16-074, filed 8/6/96, effective 9/6/96. Statutory Authority: Chapter 18.25 RCW.

246-807-396 Professional standards review organizations. [Statutory Authority: RCW 18.26.110 and chapter 18.26 RCW. 93-24-107, § 246-807-396, filed 12/1/93, effective 1/1/94.] Repealed by 96-16-074, filed 8/6/96, effective 9/6/96. Statutory Authority: Chapter 18.25 RCW.

246-807-400 Peer review membership. [Statutory Authority: RCW 18.26.110. 92-01-070 (Order 227B), § 246-807-400, filed 12/16/91, effective 1/16/92.] Repealed by 96-16-074, filed 8/6/96, effective 9/6/96. Statutory Authority: Chapter 18.25 RCW.

246-807-410 Classification of chiropractic procedures and instrumentation. [Statutory Authority: RCW 18.26.110 and 18.130.050. 91-10-051 (Order 162B), § 246-807-410, filed 4/26/91, effective 5/27/91.] Repealed by 96-16-074, filed 8/6/96, effective 9/6/96. Statutory Authority: Chapter 18.25 RCW.

246-807-420 Peer review qualifications for appointment. [Statutory Authority: RCW 18.26.110. 92-01-070 (Order 227B), § 246-807-420, filed 12/16/91, effective 1/16/92.] Repealed by 96-16-074, filed 8/6/96, effective 9/6/96. Statutory Authority: Chapter 18.25 RCW.

246-807-430 Peer review conflict of interest. [Statutory Authority: RCW 18.26.110. 92-01-070 (Order 227B), § 246-807-430, filed 12/16/91, effective 1/16/92.] Repealed by 96-16-074, filed 8/6/96, effective 9/6/96. Statutory Authority: Chapter 18.25 RCW.

246-807-440 Peer review quorum. [Statutory Authority: RCW 18.26.110. 92-01-070 (Order 227B), § 246-807-440, filed 12/16/91, effective 1/16/92.] Repealed by 96-16-074, filed 8/6/96, effective 9/6/96. Statutory Authority: Chapter 18.25 RCW.

246-807-450 Peer review conduct of reviews. [Statutory Authority: RCW 18.26.110. 92-01-070 (Order 227B), § 246-807-450, filed 12/16/91, effective 1/16/92.] Repealed by 96-16-074, filed 8/6/96, effective 9/6/96. Statutory Authority: Chapter 18.25 RCW.

246-807-460 Mediation. [Statutory Authority: RCW 18.26.110. 92-01-070 (Order 227B), § 246-807-460, filed 12/16/91, effective 1/16/92.] Repealed by 96-16-074, filed 8/6/96, effective 9/6/96. Statutory Authority: Chapter 18.25 RCW.

246-807-470 Disciplinary board conflict of interest. [Statutory Authority: RCW 18.26.110. 92-01-070 (Order 227B), § 246-807-470, filed 12/16/91, effective 1/16/92.] Repealed by 96-16-074, filed 8/6/96, effective 9/6/96. Statutory Authority: Chapter 18.25 RCW.

246-807-480 Peer review fees. [Statutory Authority: RCW 18.26.110 and 18.26.340. 92-11-009 (Order 270B), § 246-807-480, filed 5/11/92, effective 6/11/92.] Repealed by 96-16-074, filed 8/6/96, effective 9/6/96. Statutory Authority: Chapter 18.25 RCW.

246-807-500 Philosophy governing voluntary substance abuse monitoring programs. [Statutory Authority: RCW 18.26.110 and chapter 18.26 RCW. 93-24-107, § 246-807-500, filed 12/1/93, effective 1/1/94.] Repealed by 96-16-074, filed 8/6/96, effective 9/6/96. Statutory Authority: Chapter 18.25 RCW.

246-807-510 Terms used in WAC 246-807-500 through 246-807-530. [Statutory Authority: RCW 18.26.110 and chapter 18.26 RCW. 93-24-107, § 246-807-510, filed 12/1/93, effective 1/1/94.] Repealed by 96-16-074, filed 8/6/96, effective 9/6/96. Statutory Authority: Chapter 18.25 RCW.

246-807-520 Approval of substance abuse monitoring programs. [Statutory Authority: RCW 18.26.110 and chapter 18.26 RCW. 93-24-107, § 246-807-520, filed 12/1/93,

effective 1/1/94.] Repealed by 96-16-074, filed 8/6/96, effective 9/6/96. Statutory Authority: Chapter 18.25 RCW.

246-807-530 Participation in approved substance abuse monitoring program. [Statutory Authority: RCW 18.26.110 and chapter 18.26 RCW. 93-24-107, § 246-807-530, filed 12/1/93, effective 1/1/94.] Repealed by 96-16-074, filed 8/6/96, effective 9/6/96. Statutory Authority: Chapter 18.25 RCW.

Chapter 246-816
DENTISTS—DENTAL DISCIPLINARY BOARD

246-816-015 Adjudicative proceedings—Procedural rules for the dental disciplinary board. [Statutory Authority: RCW 18.32.640. 94-12-038, § 246-816-015, filed 5/25/94, effective 6/25/94.] Repealed by 96-01-083, filed 12/18/95, effective 1/18/96. Statutory Authority: RCW 18.32.035.

246-816-020 Display of licenses. [Statutory Authority: RCW 18.32.640. 91-02-048 (Order 106B), recodified as § 246-816-020, filed 12/27/90, effective 1/31/91; 81-06-013 (Order PL 373), § 308-37-100, filed 2/20/81.] Repealed by 96-01-083, filed 12/18/95, effective 1/18/96. Statutory Authority: RCW 18.32.035.

246-816-030 Maintenance and retention of patient records. [Statutory Authority: RCW 18.32.640. 91-02-048 (Order 106B), recodified as § 246-816-030, filed 12/27/90, effective 1/31/91; 82-07-043 (Order PL 392), § 308-37-110, filed 3/17/82; 81-06-013 (Order PL 373), § 308-37-110, filed 2/20/81.] Repealed by 96-01-083, filed 12/18/95, effective 1/18/96. Statutory Authority: RCW 18.32.035.

246-816-040 Report of patient injury or mortality. [Statutory Authority: RCW 18.32.640. 91-02-048 (Order 106B), recodified as § 246-816-040, filed 12/27/90, effective 1/31/91; 81-06-013 (Order PL 373), § 308-37-120, filed 2/20/81.] Repealed by 96-01-083, filed 12/18/95, effective 1/18/96. Statutory Authority: RCW 18.32.035.

246-816-050 Recording requirements for all prescription drugs. [Statutory Authority: RCW 18.32.640 and 18.130.050. 92-05-012 (Order 243B), § 246-816-050, filed 2/7/92, effective 3/9/92. Statutory Authority: RCW 18.32.640. 91-02-048 (Order 106B), recodified as § 246-816-050, filed 12/27/90, effective 1/31/91. Statutory Authority: RCW 18.32.640(1). 83-04-050 (Order PL 423), § 308-37-130, filed 2/1/83; 81-06-013 (Order PL 373), § 308-37-130, filed 2/20/81.] Repealed by 96-01-083, filed 12/18/95, effective 1/18/96. Statutory Authority: RCW 18.32.035.

246-816-060 Recording requirement for scheduled drugs. [Statutory Authority: RCW 18.32.640. 91-02-048 (Order 106B), recodified as § 246-816-060, filed 12/27/90, effective 1/31/91. Statutory Authority: RCW 18.32.640(1). 83-04-050 (Order PL 423), § 308-37-135, filed 2/1/83.] Repealed by 96-01-083, filed 12/18/95, effective 1/18/96. Statutory Authority: RCW 18.32.035.

246-816-070 Prescribing, dispensing or distributing drugs. [Statutory Authority: RCW 18.32.640. 91-02-048 (Order 106B), recodified as § 246-816-070, filed 12/27/90, effective 1/31/91; 81-06-013 (Order PL 373), § 308-37-140, filed 2/20/81.] Repealed by 96-01-083, filed 12/18/95, effective 1/18/96. Statutory Authority: RCW 18.32.035.

246-816-075 Nondiscrimination. [Statutory Authority: RCW 18.32.-640, 18.130.050(12) and 18.130.040 (3)(b)(iii). 91-03-109 (Order 127B), § 246-816-075, filed 1/22/91, effective 2/22/91.] Repealed by 96-01-083, filed 12/18/95, effective 1/18/96. Statutory Authority: RCW 18.32.-035.

246-816-080 Patient abandonment. [Statutory Authority: RCW 18.32.640. 91-02-048 (Order 106B), recodified as § 246-816-080, filed 12/27/90, effective 1/31/91. Statutory Authority: RCW 18.32.640(1). 84-21-072 (Order PL 490), § 308-37-150, filed 10/17/84; 84-05-070 (Order PL 460), § 308-37-150, filed 2/22/84.] Repealed by 96-01-083, filed 12/18/95, effective 1/18/96. Statutory Authority: RCW 18.32.035.

246-816-090 Representation of care, fees, and records. [Statutory Authority: RCW 18.32.640. 91-02-048 (Order 106B), recodified as § 246-816-090, filed 12/27/90, effective 1/31/91. Statutory Authority: RCW 18.32.640(1). 85-05-040 (Order PL 520), § 308-37-160, filed 2/19/85.] Repealed by 96-01-083, filed 12/18/95, effective 1/18/96. Statutory Authority: RCW 18.32.035.

246-816-100 Disclosure of provider services. [Statutory Authority: RCW 18.32.640. 91-02-048 (Order 106B), recodified as § 246-816-100, filed 12/27/90, effective 1/31/91. Statutory Authority: RCW 18.32.640(1). 85-05-040 (Order PL 520), § 308-37-170, filed 2/19/85.] Repealed by 96-01-083, filed 12/18/95, effective 1/18/96. Statutory Authority: RCW 18.32.035.

246-816-110 Disclosure of membership affiliation. [Statutory Authority: RCW 18.32.640. 91-02-048 (Order 106B), recodified as § 246-816-110, filed 12/27/90, effective 1/31/91. Statutory Authority: RCW 18.32.640(1). 85-05-040 (Order PL 520), § 308-37-180, filed 2/19/85.] Repealed by 96-01-083, filed 12/18/95, effective 1/18/96. Statutory Authority: RCW 18.32.035.

246-816-120 Specialty representation. [Statutory Authority: RCW 18.32.640. 91-02-048 (Order 106B), recodified as § 246-816-120, filed 12/27/90, effective 1/31/91; 89-08-095 (Order PM 826), § 308-37-190, filed 4/5/89. Statutory Authority: RCW 18.32.640(1). 85-05-040 (Order PL 520), § 308-37-190, filed 2/19/85.] Repealed by 96-01-083, filed 12/18/95, effective 1/18/96. Statutory Authority: RCW 18.32.035.

246-816-130 Maintenance of records. [Statutory Authority: RCW 18.32.640. 91-02-048 (Order 106B), recodified as § 246-816-130, filed 12/27/90, effective 1/31/91; Order, § 1, filed 3/23/60.] Repealed by 96-01-083, filed 12/18/95, effective 1/18/96. Statutory Authority: RCW 18.32.035.

246-816-140 Prescriptions. [Statutory Authority: RCW 18.32.640. 91-02-048 (Order 106B), recodified as § 246-816-140, filed 12/27/90, effective 1/31/91. Statutory Authority: RCW 18.32.040. 82-04-024 (Order PL 391), § 308-40-020, filed 1/26/82; Order, § 2, filed 3/23/60.] Repealed by 96-01-083, filed 12/18/95, effective 1/18/96. Statutory Authority: RCW 18.32.035.

246-816-150 A rule applicable to dental technicians. [Statutory Authority: RCW 18.32.640. 91-02-048 (Order 106B), recodified as § 246-816-150, filed 12/27/90, effective 1/31/91; Order, filed 3/23/60.] Repealed by 96-01-083, filed 12/18/95, effective 1/18/96. Statutory Authority: RCW 18.32.035.

246-816-201 Purpose. [Statutory Authority: RCW 18.32.640 and 18.130.050. 92-05-012 (Order 243B), § 246-816-201, filed 2/7/92, effective 3/9/92. Statutory Authority: RCW 18.32.640. 91-02-048 (Order 106B), recodified as § 246-816-201, filed 12/27/90, effective 1/31/91; 81-17-054 (Order PL 382), § 308-38-100, filed 8/18/81.] Repealed by 96-01-083, filed 12/18/95, effective 1/18/96. Statutory Authority: RCW 18.32.035.

246-816-210 Definitions for WAC 246-816-201 through 246-816-260. [Statutory Authority: RCW 18.32.640 and 18.130.050. 92-05-012 (Order 243B), § 246-816-210, filed 2/7/92, effective 3/9/92. Statutory Authority: RCW 18.32.640. 91-02-048 (Order 106B), recodified as § 246-816-210, filed 12/27/90, effective 1/31/91; 81-17-054 (Order PL 382), § 308-38-110, filed 8/18/81.] Repealed by 96-01-083, filed 12/18/95, effective 1/18/96. Statutory Authority: RCW 18.32.035.

246-816-220 Acts that may be performed by unlicensed persons. [Statutory Authority: RCW 18.32.640. 91-02-048 (Order 106B), recodified as § 246-816-220, filed 12/27/90, effective 1/31/91; 81-17-054 (Order PL 382), § 308-38-120, filed 8/18/81.] Repealed by 96-01-083, filed 12/18/95, effective 1/18/96. Statutory Authority: RCW 18.32.035.

246-816-225 An act that may be performed by unlicensed persons outside the treatment facility. [Statutory Authority: RCW 18.32.640, 18.32.020 and 18.32.030. 93-19-111 (Order 400B), § 246-816-225, filed 9/20/93, effective 10/21/93.] Repealed by 96-01-083, filed 12/18/95, effective 1/18/96. Statutory Authority: RCW 18.32.-035.

246-816-230 Acts that may not be performed by unlicensed persons. [Statutory Authority: RCW 18.32.640 and 18.130.050. 92-05-012 (Order 243B), § 246-816-230, filed 2/7/92, effective 3/9/92. Statutory Authority: RCW 18.32.640. 91-02-048 (Order 106B), recodified as § 246-816-230, filed 12/27/90, effective 1/31/91; 81-17-054 (Order PL 382), § 308-38-130, filed 8/18/81.] Repealed by 96-01-083, filed 12/18/95, effective 1/18/96. Statutory Authority: RCW 18.32.035.

246-816-240 Acts that may be performed by licensed dental hygienists under general supervision. [Statutory Authority: RCW 18.32.640. 92-20-036 (Order 307B), § 246-816-240, filed 9/29/92, effective 10/30/92; 91-02-048 (Order 106B), recodified as § 246-816-240, filed 12/27/90,

effective 1/31/91; 81-17-054 (Order PL 382), § 308-38-140, filed 8/18/81.] Repealed by 96-01-083, filed 12/18/95, effective 1/18/96. Statutory Authority: RCW 18.32.035.

246-816-250 Acts that may be performed by licensed dental hygienists under close supervision. [Statutory Authority: RCW 18.32.640. 92-20-036 (Order 307B), § 246-816-250, filed 9/29/92, effective 10/30/92. Statutory Authority: RCW 18.32.640 and 18.130.050. 92-05-012 (Order 243B), § 246-816-250, filed 2/7/92, effective 3/9/92. Statutory Authority: RCW 18.32.640. 91-02-048 (Order 106B), recodified as § 246-816-250, filed 12/27/90, effective 1/31/91; 81-17-054 (Order PL 382), § 308-38-150, filed 8/18/81.] Repealed by 96-01-083, filed 12/18/95, effective 1/18/96. Statutory Authority: RCW 18.32.035.

246-816-260 Acts that may not be performed by dental hygienists. [Statutory Authority: RCW 18.32.640 and 18.130.050. 92-05-012 (Order 243B), § 246-816-260, filed 2/7/92, effective 3/9/92. Statutory Authority: RCW 18.32.640. 91-02-048 (Order 106B), recodified as § 246-816-260, filed 12/27/90, effective 1/31/91; 81-17-054 (Order PL 382), § 308-38-160, filed 8/18/81.] Repealed by 96-01-083, filed 12/18/95, effective 1/18/96. Statutory Authority: RCW 18.32.035.

246-816-301 Purpose. [Statutory Authority: RCW 18.32.640 and 18.130.050. 92-05-012 (Order 243B), § 246-816-301, filed 2/7/92, effective 3/9/92. Statutory Authority: RCW 18.32.640. 91-02-048 (Order 106B), recodified as § 246-816-301, filed 12/27/90, effective 1/31/91; 90-18-042 (Order 088), § 308-39-100, filed 8/29/90, effective 10/1/90; 81-06-013 (Order PL 373), § 308-39-100, filed 2/20/81.] Repealed by 96-01-083, filed 12/18/95, effective 1/18/96. Statutory Authority: RCW 18.32.035.

246-816-310 Definitions for WAC 246-816-301 through 246-816-410. [Statutory Authority: RCW 18.32.640 and 18.130.050. 92-05-012 (Order 243B), § 246-816-310, filed 2/7/92, effective 3/9/92. Statutory Authority: RCW 18.32.640. 91-02-048 (Order 106B), recodified as § 246-816-310, filed 12/27/90, effective 1/31/91; 90-18-042 (Order 088), § 308-39-110, filed 8/29/90, effective 10/1/90. Statutory Authority: RCW 18.32.640(1). 82-16-087 (Order PL 403), § 308-39-110, filed 8/4/82. Statutory Authority: RCW 18.32.640. 81-06-013 (Order PL 373), § 308-39-110, filed 2/20/81.] Repealed by 96-01-083, filed 12/18/95, effective 1/18/96. Statutory Authority: RCW 18.32.035.

246-816-320 Basic life support requirements. [Statutory Authority: RCW 18.32.640. 91-02-048 (Order 106B), recodified as § 246-816-320, filed 12/27/90, effective 1/31/91; 90-18-042 (Order 088), § 308-39-125, filed 8/29/90, effective 10/1/90.] Repealed by 96-01-083, filed 12/18/95, effective 1/18/96. Statutory Authority: RCW 18.32.035.

246-816-330 Local anesthesia. [Statutory Authority: RCW 18.32.640. 91-02-048 (Order 106B), recodified as § 246-816-330, filed 12/27/90, effective 1/31/91; 90-18-042 (Order 088), § 308-39-130, filed 8/29/90, effective 10/1/90.] Repealed by 96-01-083, filed 12/18/95, effective 1/18/96. Statutory Authority: RCW 18.32.035.

246-816-340 Nitrous oxide/oxygen sedation. [Statutory Authority: RCW 18.32.640. 91-02-048 (Order 106B), recodified as § 246-816-340, filed 12/27/90, effective 1/31/91; 90-18-042 (Order 088), § 308-39-140, filed 8/29/90, effective 10/1/90.] Repealed by 96-01-083, filed 12/18/95, effective 1/18/96. Statutory Authority: RCW 18.32.035.

246-816-350 Conscious sedation with an oral agent. [Statutory Authority: RCW 18.32.640. 91-02-048 (Order 106B), recodified as § 246-816-350, filed 12/27/90, effective 1/31/91; 90-18-041 (Order 087), § 308-39-150, filed 8/29/90, effective 10/1/90.] Repealed by 96-01-083, filed 12/18/95, effective 1/18/96. Statutory Authority: RCW 18.32.035.

246-816-360 Conscious sedation with parenteral or multiple oral agents. [Statutory Authority: RCW 18.32.640 and 18.130.050. 92-05-012 (Order 243B), § 246-816-360, filed 2/7/92, effective 3/9/92. Statutory Authority: RCW 18.32.640. 91-02-048 (Order 106B), recodified as § 246-816-360, filed 12/27/90, effective 1/31/91; 90-18-041 (Order 087), § 308-39-160, filed 8/29/90, effective 10/1/90.] Repealed by 96-01-083, filed 12/18/95, effective 1/18/96. Statutory Authority: RCW 18.32.035.

246-816-370 General anesthesia (including deep sedation). [Statutory Authority: RCW 18.32.640. 93-19-112 (Order 399B), § 246-816-370, filed 9/20/93, effective 10/21/93. Statutory Authority: RCW 18.32.640 and 18.130.050. 92-05-012 (Order 243B), § 246-816-370, filed 2/7/92, effective 3/9/92. Statutory Authority: RCW 18.32.640. 91-02-048 (Order 106B), recodified as § 246-816-370, filed 12/27/90, effective 1/31/91; 90-18-041 (Order 087), § 308-39-170, filed 8/29/90, effective 10/1/90.] Repealed by 96-01-083, filed 12/18/95, effective 1/18/96. Statutory Authority: RCW 18.32.035.

246-816-380 Mandatory reporting of death or significant complication. [Statutory Authority: RCW 18.32.640. 91-02-048 (Order 106B), recodified as § 246-816-380, filed 12/27/90, effective 1/31/91; 90-18-041 (Order 087), § 308-39-180, filed 8/29/90, effective 10/1/90.] Repealed by 96-01-083, filed 12/18/95, effective 1/18/96. Statutory Authority: RCW 18.32.035.

246-816-390 Applications—Permits—Renewals for the administration of conscious sedation with multiple oral or parenteral agents or general anesthesia (including deep sedation). [Statutory Authority: RCW 18.32.640 and 18.130.050. 92-05-012 (Order 243B), § 246-816-390, filed 2/7/92, effective 3/9/92. Statutory Authority: RCW 18.32.640. 91-02-048 (Order 106B), recodified as § 246-816-390, filed 12/27/90, effective 1/31/91; 90-18-041 (Order 087), § 308-39-190, filed 8/29/90, effective 10/1/90.] Repealed by 96-01-083, filed 12/18/95, effective 1/18/96. Statutory Authority: RCW 18.32.035.

246-816-400 Application of chapter 18.130 RCW. [Statutory Authority: RCW 18.32.640. 91-02-048 (Order 106B), recodified as § 246-816-400, filed 12/27/90, effective 1/31/91; 90-18-041 (Order 087), § 308-39-200, filed 8/29/90, effective 10/1/90.] Repealed by 96-01-083, filed 12/18/95, effective 1/18/96. Statutory Authority: RCW 18.32.035.

246-816-410 Effective date. [Statutory Authority: RCW 18.32.640 and 18.130.050. 92-05-012 (Order 243B), § 246-816-410, filed 2/7/92, effective 3/9/92. Statutory Authority: RCW 18.32.640. 91-02-048 (Order 106B), recodified as § 246-816-410, filed 12/27/90, effective 1/31/91; 90-18-041 (Order 087), § 308-39-210, filed 8/29/90, effective 10/1/90.] Repealed by 96-01-083, filed 12/18/95, effective 1/18/96. Statutory Authority: RCW 18.32.035.

246-816-501 Intent. [Statutory Authority: RCW 18.32.640. 91-02-048 (Order 106B), recodified as § 246-816-501, filed 12/27/90, effective 1/31/91. Statutory Authority: RCW 18.130.175 and 18.32.534. 90-16-099 (Order 076), § 308-25-290, filed 8/1/90, effective 9/1/90.] Repealed by 96-01-083, filed 12/18/95, effective 1/18/96. Statutory Authority: RCW 18.32.035.

246-816-510 Terms used in WAC 246-816-501 through 246-816-530. [Statutory Authority: RCW 18.32.640 and 18.130.050. 92-05-012 (Order 243B), § 246-816-510, filed 2/7/92, effective 3/9/92. Statutory Authority: RCW 18.32.640. 91-02-048 (Order 106B), recodified as § 246-816-510, filed 12/27/90, effective 1/31/91. Statutory Authority: RCW 18.130.175 and 18.32.534. 90-16-099 (Order 076), § 308-25-310, filed 8/1/90, effective 9/1/90.] Repealed by 96-01-083, filed 12/18/95, effective 1/18/96. Statutory Authority: RCW 18.32.035.

246-816-520 Approval of substance abuse monitoring programs. [Statutory Authority: RCW 18.32.640. 91-02-048 (Order 106B), recodified as § 246-816-520, filed 12/27/90, effective 1/31/91. Statutory Authority: RCW 18.130.175 and 18.32.534. 90-16-099 (Order 076), § 308-25-320, filed 8/1/90, effective 9/1/90.] Repealed by 96-01-083, filed 12/18/95, effective 1/18/96. Statutory Authority: RCW 18.32.035.

246-816-530 Participation in approved substance abuse monitoring program. [Statutory Authority: RCW 18.32.640. 91-02-048 (Order 106B), recodified as § 246-816-530, filed 12/27/90, effective 1/31/91. Statutory Authority: RCW 18.130.175 and 18.32.534. 90-16-099 (Order 076), § 308-25-330, filed 8/1/90, effective 9/1/90.] Repealed by 96-01-083, filed 12/18/95, effective 1/18/96. Statutory Authority: RCW 18.32.035.

246-816-701 Purpose. [Statutory Authority: RCW 18.32.640. 92-09-069 (Order 263B), § 246-816-701, filed 4/14/92, effective 5/15/92.] Repealed by 96-01-083, filed 12/18/95, effective 1/18/96. Statutory Authority: RCW 18.32.-035.

246-816-710 Definitions. [Statutory Authority: RCW 18.32.640. 92-09-069 (Order 263B), § 246-816-710, filed 4/14/92, effective 5/15/92.] Repealed by 96-01-083, filed 12/18/95, effective 1/18/96. Statutory Authority: RCW 18.32.035.

246-816-720 Use of barriers and sterilization techniques. [Statutory Authority: RCW 18.32.640. 92-09-069 (Order 263B), § 246-816-720, filed 4/14/92, effective 5/15/92.] Repealed by 96-01-083, filed 12/18/95, effective 1/18/96. Statutory Authority: RCW 18.32.035.

246-816-730 Management of single use items. [Statutory Authority: RCW 18.32.640. 92-09-069 (Order 263B), § 246-816-730, filed 4/14/92, effective 5/15/92.] Repealed by 96-01-083, filed 12/18/95, effective 1/18/96. Statutory Authority: RCW 18.32.035.

246-816-740 Effective date. [Statutory Authority: RCW 18.32.640. 92-09-069 (Order 263B), § 246-816-740, filed 4/14/92, effective 5/15/92.] Repealed by 96-01-083, filed 12/18/95, effective 1/18/96. Statutory Authority: RCW 18.32.035.

246-816-990 Dental anesthesia permit fees. [Statutory Authority: RCW 43.70.040. 91-02-049 (Order 121), recodified as § 246-816-990, filed 12/27/90, effective 1/31/91. Statutory Authority: RCW 43.70.250. 90-18-040 (Order 086), § 308-39-220, filed 8/29/90, effective 10/1/90.] Repealed by 95-16-122 and 96-01-083, filed 8/2/95 and 12/18/95, effective 9/1/95 and 1/18/96. Statutory Authority: RCW 43.70.040 and 18.32.035.

Reviser's note: Later promulgation, see chapter 246-817 WAC.

Chapter 246-818
DENTISTS—BOARD OF DENTAL EXAMINERS

246-818-015 Adjudicative proceedings—Procedural rules for the board of dental examiners. [Statutory Authority: RCW 18.32.035. 94-08-011, § 246-818-015, filed 3/28/94, effective 4/28/94.] Repealed by 96-01-083, filed 12/18/95, effective 1/18/96. Statutory Authority: RCW 18.32.035.

246-818-020 Examination eligibility and application. [Statutory Authority: RCW 18.32.035. 94-11-088, § 246-818-020, filed 5/17/94, effective 6/17/94; 92-01-122 (Order 228B), § 246-818-020, filed 12/19/91, effective 1/19/92; 91-01-007 (Order 101B), recodified as § 246-818-020, filed 12/6/90, effective 1/31/91. Statutory Authority: RCW 18.32.040 and 18.130.050. 88-13-131 (Order PM 740), § 308-40-101, filed 6/22/88. Statutory Authority: RCW 18.32.040. 82-04-024 (Order PL 391), § 308-40-101, filed 1/26/82. Statutory Authority: RCW 18.29.030 and 18.32.040. 81-08-043 (Order PL 374), § 308-40-101, filed 3/31/81; 80-05-063 (Order PL 342), § 308-40-101, filed 4/22/80. Statutory Authority: RCW 18.32.040. 79-04-011 (Order 295, Resolution No. 295), § 308-40-101, filed 3/13/79.] Repealed by 96-01-083, filed 12/18/95, effective 1/18/96. Statutory Authority: RCW 18.32.035.

246-818-030 Examination content. [Statutory Authority: RCW 18.32.035. 91-01-007 (Order 101B), recodified as § 246-818-030, filed 12/6/90, effective 1/31/91. Statutory Authority: RCW 18.32.040(4) and 18.32.120. 89-06-075 (Order PM 819), § 308-40-102, filed 3/1/89. Statutory Authority: RCW 18.32.040 and 18.130.050. 88-13-131 (Order PM 740), § 308-40-102, filed 6/22/88. Statutory Authority: RCW 18.32.040. 87-09-097 (Order PM 649), § 308-40-102, filed 4/22/87; 86-08-046 (Order PL 583), § 308-40-102, filed 3/27/86; 84-07-050 (Order PL 462), § 308-40-102, filed 3/21/84; 83-08-021 (Order PL 431), § 308-40-102, filed 3/29/83; 82-04-024 (Order PL 391), § 308-40-102, filed 1/26/82; 79-04-011 (Order 295, Resolution No. 295), § 308-40-102, filed 3/13/79.] Repealed by 96-01-083, filed 12/18/95, effective 1/18/96. Statutory Authority: RCW 18.32.035.

246-818-040 Dismissal from examination. [Statutory Authority: RCW 18.32.035. 91-01-007 (Order 101B), recodified as § 246-818-040, filed 12/6/90, effective 1/31/91. Statutory Authority: RCW 18.32.040 and 18.130.050. 88-13-131 (Order PM 740), § 308-40-103, filed 6/22/88. Statutory Authority: RCW 18.32.040. 82-04-024 (Order PL 391), § 308-40-103, filed 1/26/82.] Repealed by 96-01-083, filed 12/18/95, effective 1/18/96. Statutory Authority: RCW 18.32.035.

246-818-050 Examination results. [Statutory Authority: RCW 18.32.120. 91-14-087 (Order 180B), § 246-818-050, filed 7/1/91, effective 8/1/91. Statutory Authority: RCW 18.32.035. 91-01-007 (Order 101B), recodified as § 246-818-050, filed 12/6/90, effective 1/31/91. Statutory Authority: RCW 18.32.640. 89-01-083 (Order PM 809), § 308-40-104, filed 12/20/88. Statutory Authority: RCW 18.32.040. 85-16-113 (Order PL 547), § 308-40-104, filed 8/7/85; 84-11-025 (Order PL 467), § 308-40-104, filed 5/11/84; 82-04-024 (Order PL 391), § 308-40-104, filed 1/26/82.] Repealed by 96-01-083, filed 12/18/95, effective 1/18/96. Statutory Authority: RCW 18.32.035.

246-818-060 Practical examination review procedures. [Statutory Authority: RCW 18.32.035. 92-01-122 (Order 228B), § 246-818-060, filed 12/19/91, effective 1/19/92; 91-01-007 (Order 101B), recodified as § 246-818-060, filed 12/6/90, effective 1/31/91. Statutory Authority: RCW 18.32.040 and 18.32.120. 89-13-052 (Order PM 834), § 308-40-105, filed 6/19/89. Statutory Authority: RCW 18.32.040 and 18.130.050. 88-13-131 (Order PM 740), § 308-40-105, filed 6/22/88. Statutory Authority: RCW 18.32.040. 87-09-097 (Order PM 649), § 308-40-105, filed 4/22/87; 82-04-024 (Order PL 391), § 308-40-105, filed 1/26/82. Statutory Authority: RCW 18.29.030 and 18.32.040. 80-18-009 (Order 363), § 308-40-105, filed 11/24/80; 80-05-063 (Order PL 342), § 308-40-105, filed 4/22/80.] Repealed by 96-01-083, filed 12/18/95, effective 1/18/96. Statutory Authority: RCW 18.32.-035.

246-818-070 Written examination review procedures. [Statutory Authority: RCW 18.32.035. 92-01-122 (Order 228B), § 246-818-070, filed 12/19/91, effective 1/19/92; 91-01-007 (Order 101B), recodified as § 246-818-070, filed 12/6/90, effective 1/31/91. Statutory Authority: RCW 18.32.040 and 18.32.120. 89-13-052 (Order PM 834), § 308-40-106, filed 6/19/89.] Repealed by 96-01-083, filed 12/18/95, effective 1/18/96. Statutory Authority: RCW 18.32.035.

246-818-080 Application for licensure—AIDS education requirements. [Statutory Authority: RCW 18.32.035. 92-01-122 (Order 228B), § 246-818-080, filed 12/19/91, effective 1/19/92. 91-01-007 (Order 101B), recodified as § 246-818-080, filed 12/6/90, effective 1/31/91. Statutory Authority: RCW 70.24.270. 90-08-011, § 308-40-107, filed 3/26/90, effective 4/26/90.] Repealed by 96-01-083, filed 12/18/95, effective 1/18/96. Statutory Authority: RCW 18.32.035.

246-818-090 Graduates of nonaccredited schools. [Statutory Authority: RCW 18.32.035. 92-01-122 (Order 228B), § 246-818-090, filed 12/19/91, effective 1/19/92; 91-01-007 (Order 101B), recodified as § 246-818-090, filed 12/6/90, effective 1/31/91. Statutory Authority: RCW 18.32.040. 84-23-062 (Order PL 496), § 308-40-110, filed 11/21/84; 83-08-021 (Order PL 431), § 308-40-110, filed 3/29/83; 82-04-024 (Order PL 391), § 308-40-110, filed 1/26/82; Order PL 253, § 308-40-110, filed 7/13/76; Order PL 194, § 308-40-110, filed 7/2/75.] Repealed by 96-01-083, filed 12/18/95, effective 1/18/96. Statutory Authority: RCW 18.32.035.

246-818-100 Licenses—Persons licensed or qualified out-of-state who are faculty at school of dentistry—Conditions. [Statutory Authority: RCW 18.32.035. 91-01-007 (Order 101B), recodified as § 246-818-100, filed 12/6/90, effective 1/31/91. Statutory Authority: RCW 18.32.035 and 18.32.195. 90-11-083 (Order 057), § 308-40-115, filed 5/17/90, effective 6/17/90.] Repealed by 96-01-083, filed 12/18/95, effective 1/18/96. Statutory Authority: RCW 18.32.035.

246-818-110 AIDS prevention and information education requirements. [Statutory Authority: RCW 18.32.035. 91-01-007 (Order 101B), recodified as § 246-818-110, filed 12/6/90, effective 1/31/91. Statutory Authority: 1988 c 206 § 604. 89-11-053 (Order PM 837), § 308-40-140, filed 5/17/89.] Repealed by 92-01-122 (Order 228B), filed 12/19/91, effective 1/19/92. Statutory Authority: RCW 18.32.035.

246-818-120 Licensure without examination for dentists—Eligibility. [Statutory Authority: RCW 18.32.035. 93-07-108 (Order 350B), § 246-818-120, filed 3/23/93, effective 4/23/93; 92-01-122 (Order 228B), § 246-818-120, filed 12/19/91, effective 1/19/92; 91-01-007 (Order 101B), recodified as § 246-818-120, filed 12/6/90, effective 1/31/91; 90-18-038 (Order 085), § 308-40-150, filed 8/28/90, effective 9/28/90.] Repealed by 96-01-083, filed 12/18/95, effective 1/18/96. Statutory Authority: RCW 18.32.035.

246-818-130 Licensure without examination for dentists—Application procedure. [Statutory Authority: RCW 18.32.035. 93-12-005 (Order 363B), § 246-818-130, filed 5/19/93, effective 6/19/93; 92-01-122 (Order 228B), § 246-818-130, filed 12/19/91, effective 1/19/92; 91-01-007 (Order

101B), recodified as § 246-818-130, filed 12/6/90, effective 1/31/91; 90-18-038 (Order 085), § 308-40-151, filed 8/28/90, effective 9/28/90.] Repealed by 96-01-083, filed 12/18/95, effective 1/18/96. Statutory Authority: RCW 18.32.035.

246-818-140 Licensure without examination for dentists—Licensing examination standards. [Statutory Authority: RCW 18.32.035. 93-07-108 (Order 350B), § 246-818-140, filed 3/23/93, effective 4/23/93; 91-01-007 (Order 101B), recodified as § 246-818-140, filed 12/6/90, effective 1/31/91; 90-18-038 (Order 085), § 308-40-152, filed 8/28/90, effective 9/28/90.] Repealed by 96-01-083, filed 12/18/95, effective 1/18/96. Statutory Authority: RCW 18.32.035.

246-818-142 Temporary practice permits—Eligibility. [Statutory Authority: RCW 18.32.0365 and 18.130.075. 94-22-072, § 246-818-142, filed 11/2/94, effective 12/3/94.] Repealed by 96-01-083, filed 12/18/95, effective 1/18/96. Statutory Authority: RCW 18.32.035.

246-818-143 Temporary practice permits—Issuance and duration. [Statutory Authority: RCW 18.32.0365 and 18.130.075. 94-22-072, § 246-818-143, filed 11/2/94, effective 12/3/94.] Repealed by 96-01-083, filed 12/18/95, effective 1/18/96. Statutory Authority: RCW 18.32.035.

246-818-150 Renewal of licenses. [Statutory Authority: RCW 18.32.035. 91-01-007 (Order 101B), recodified as § 246-818-150, filed 12/6/90, effective 1/31/91. Statutory Authority: 1989 c 202 § 22. 90-05-039 (Order 036), § 308-40-135, filed 2/14/90, effective 3/1/90.] Repealed by 96-01-083, filed 12/18/95, effective 1/18/96. Statutory Authority: RCW 18.32.035.

246-818-990 Dentist fees. [Statutory Authority: RCW 43.70.040. 92-17-059 (Order 298), § 246-818-990, filed 8/18/92, effective 9/18/92; 91-02-049 (Order 121), recodified as § 246-818-990, filed 12/27/90, effective 1/31/91. Statutory Authority: RCW 43.70.250. 90-04-094 (Order 029), § 308-40-125, filed 2/7/90, effective 3/10/90. Statutory Authority: RCW 43.24.086. 87-18-031 (Order PM 667), § 308-40-125, filed 8/27/87. Statutory Authority: 1983 c 168 § 12. 83-17-031 (Order PL 442), § 308-40-125, filed 8/10/83. Formerly WAC 308-40-120.] Repealed by 94-02-058, filed 1/3/94, effective 3/1/94. Statutory Authority: RCW 43.70.040.

246-818-991 Dentist fees. [Statutory Authority: RCW 43.70.040. 94-02-058, § 246-818-991, filed 1/3/94, effective 3/1/94.] Repealed by 95-16-122 and 96-01-083, filed 8/2/95 and 12/18/95, effective 9/1/95 and 1/18/96. Statutory Authority: RCW 43.70.040 and 18.32.035.

Reviser's note: Later promulgation, see chapter 246-817 WAC.

Chapter 246-838
PRACTICAL NURSES

246-838-010 Definitions. [Statutory Authority: RCW 18.78.050. 92-17-023 (Order 296B), § 246-838-010, filed 8/10/92, effective 9/10/92. Statutory Authority: RCW 18.78.050 and 18.130.050. 92-02-046 (Order 231B), § 246-838-010, filed 12/27/91, effective 1/27/92. Statutory Authority: RCW 18.78.050. 91-01-078 (Order 109B), recodified as § 246-838-010, filed 12/17/90, effective 1/31/91. Statutory Authority: RCW 18.78.050, 18.78.054, 18.78.060, 18.78.072, 18.78.090, 18.78.225, 18.130.050 and 70.24.270. 88-24-017 (Order PM 768), § 308-117-010, filed 12/1/88. Statutory Authority: RCW 18.78.050. 84-01-061 (Order PL 452), § 308-117-010, filed 12/19/83. Formerly WAC 308-116-005.] Repealed by 97-13-100, filed 6/18/97, effective 7/19/97. Statutory Authority: Chapter 18.79 RCW.

246-838-020 Functions of a licensed practical nurse. [Statutory Authority: RCW 18.78.050. 91-01-078 (Order 109B), recodified as § 246-838-020, filed 12/17/90, effective 1/31/91; 84-01-061 (Order PL 452), § 308-117-020, filed 12/19/83. Formerly WAC 308-116-010.] Repealed by 97-13-100, filed 6/18/97, effective 7/19/97. Statutory Authority: Chapter 18.79 RCW.

246-838-026 Mandatory reporting. [Statutory Authority: RCW 18.78.054 and 18.130.070. 91-13-023 (Order 175B), § 246-838-026, filed 6/11/91, effective 7/12/91.] Repealed by 97-13-100, filed 6/18/97, effective 7/19/97. Statutory Authority: Chapter 18.79 RCW.

246-838-030 Standards of conduct for discipline. [Statutory Authority: RCW 18.78.050. 92-17-023 (Order 296B), § 246-838-030, filed 8/10/92, effective 9/10/92. Statutory Authority: RCW 18.78.050 and 18.130.050. 92-02-046 (Order 231B), § 246-838-030, filed 12/27/91, effective 1/27/92. Statutory Authority: RCW 18.78.050. 91-01-078 (Order 109B), recodified as § 246-838-030, filed 12/17/90, effective 1/31/91. Statutory Authority: RCW 18.78.050, 18.130.050 (1) and (12) and 1986 c 259 § § 19, 128 and 131. 86-18-031 (Order PM 612), § 308-117-025, filed 8/27/86. Statutory Authority: RCW 18.78.-050. 86-01-084 (Order PL 574), § 308-117-025, filed 12/18/85.] Repealed by 97-13-100, filed 6/18/97, effective 7/19/97. Statutory Authority: Chapter 18.79 RCW.

246-838-040 Licensure qualifications. [Statutory Authority: RCW 18.130.050 and 18.78.050. 94-08-050 § 246-838-040, filed 4/1/94, effective 5/2/94; 91-13-023 (Order 175B), § 246-838-040, filed 6/11/91, effective 7/12/91. Statutory Authority: RCW 18.78.050. 91-01-078 (Order 109B), recodified as § 246-838-040, filed 12/17/90, effective 1/31/91. Statutory Authority: RCW 18.78.-050, 18.78.054, 18.78.060, 18.78.072, 18.78.090, 18.78.225, 18.130.050 and 70.24.270. 88-24-017 (Order PM 768), § 308-117-030, filed 12/1/88. Statutory Authority: RCW 18.78.050, 18.78.054, 18.78.060, 18.130.050 and SHB 1404, 1988 c 211. 88-18-005 (Order PM 768), § 308-117-030, filed 8/25/88. Statutory Authority: 18.78.050, 18.78.060 and 18.130.050. 88-08-034 (Order PM 718), § 308-117-030, filed 4/1/88. Statutory Authority: RCW 18.78.050. 84-01-061 (Order PL 452), § 308-117-030, filed 12/19/83. Formerly WAC 308-116-295.] Repealed by 99-08-104, filed 4/6/99, effective 5/7/99. Statutory Authority: Chapter 18.79 RCW.

246-838-050 Licensing examination. [Statutory Authority: RCW 18.78.050. 93-21-006, § 246-838-050, filed 10/7/93, effective 11/7/93; 92-17-023 (Order 296B), § 246-838-050, filed 8/10/92, effective 9/10/92; 91-01-078 (Order 109B), recodified as § 246-838-050, filed 12/17/90, effective 1/31/91. Statutory Authority: RCW 18.78.-050, 18.78.054, 18.78.060, 18.130.050 and SHB 1404, 1988 c 211. 88-18-005 (Order PM 768), § 308-117-040, filed 8/25/88. Statutory Authority: RCW 18.78.050. 84-01-061 (Order PL 452), § 308-117-040, filed 12/19/83.] Repealed by 97-13-100, filed 6/18/97, effective 7/19/97. Statutory Authority: Chapter 18.79 RCW.

246-838-060 Release of results of examination. [Statutory Authority: RCW 18.78.050 and 18.130.050. 91-13-023 (Order 175B), § 246-838-060, filed 6/11/91, effective 7/12/91. Statutory Authority: RCW 18.78.050. 91-01-078 (Order 109B), recodified as § 246-838-060, filed 12/17/90, effective 1/31/91. Statutory Authority: RCW 18.78.050, 18.78.054, 18.78.060, 18.130.050 and SHB 1404, 1988 c 211. 88-18-005 (Order PM 768), § 308-117-050, filed 8/25/88. Statutory Authority: RCW 18.78.050. 84-01-061 (Order PL 452), § 308-117-050, filed 12/19/83.] Repealed by 97-13-100, filed 6/18/97, effective 7/19/97. Statutory Authority: Chapter 18.79 RCW.

246-838-070 Filing of application for licensing examination. [Statutory Authority: RCW 18.130.050 and 18.78.050. 94-08-050 § 246-838-070, filed 4/1/94, effective 5/2/94; 91-13-023 (Order 175B), § 246-838-070, filed 6/11/91, effective 7/12/91. Statutory Authority: RCW 18.78.-050. 91-01-078 (Order 109B), recodified as § 246-838-070, filed 12/17/90, effective 1/31/91. Statutory Authority: RCW 18.78.050, 18.78.054, 18.78.060, 18.78.072, 18.78.090, 18.78.225, 18.130.050 and 70.24.270. 88-24-017 (Order PM 768), § 308-117-060, filed 12/1/88. Statutory Authority: RCW 18.78.050. 84-01-061 (Order PL 452), § 308-117-060, filed 12/19/83.] Repealed by 97-13-100, filed 6/18/97, effective 7/19/97. Statutory Authority: Chapter 18.79 RCW.

246-838-080 Failures—Repeat examination. [Statutory Authority: RCW 18.130.050 and 18.78.050. 94-08-050 § 246-838-080, filed 4/1/94, effective 5/2/94. Statutory Authority: RCW 18.78.050. 91-01-078 (Order 109B), recodified as § 246-838-080, filed 12/17/90, effective 1/31/91; 84-01-061 (Order PL 452), § 308-117-070, filed 12/19/83.] Repealed by 97-13-100, filed 6/18/97, effective 7/19/97. Statutory Authority: Chapter 18.79 RCW.

246-838-090 Licensure of graduates of foreign schools of nursing. [Statutory Authority: RCW 18.130.050 and 18.78.050. 94-08-050 § 246-838-090, filed 4/1/94, effective 5/2/94. Statutory Authority: RCW 18.78.050. 93-21-006, § 246-838-090, filed 10/7/93, effective 11/7/93. Statutory Authority: RCW 18.78.050 and 18.130.050. 91-13-023 (Order 175B), § 246-838-090, filed 6/11/91,

effective 7/12/91. Statutory Authority: RCW 18.78.-050. 91-01-078 (Order 109B), recodified as § 246-838-090, filed 12/17/90, effective 1/31/91. Statutory Authority: RCW 18.78.050, 18.78.060, 18.78.070 and 18.130.050. 89-10-075 (Order PM 835), § 308-117-080, filed 5/3/89; 88-05-011 (Order PM 705), § 308-117-080, filed 2/9/88. Statutory Authority: RCW 18.78.050. 84-01-061 (Order PL 452), § 308-117-080, filed 12/19/83.] Repealed by 97-13-100, filed 6/18/97, effective 7/19/97. Statutory Authority: Chapter 18.79 RCW.

246-838-100 Licensure by interstate endorsement. [Statutory Authority: RCW 18.78.050 and 18.130.050. 91-13-023 (Order 175B), § 246-838-100, filed 6/11/91, effective 7/12/91. Statutory Authority: RCW 18.78.050. 91-01-078 (Order 109B), recodified as § 246-838-100, filed 12/17/90, effective 1/31/91. Statutory Authority: RCW 18.78.050, 18.78.054, 18.78.060, 18.78.072, 18.78.090, 18.78.225, 18.130.050 and 70.24.270. 88-24-017 (Order PM 768), § 308-117-090, filed 12/1/88. Statutory Authority: RCW 18.78.050, 18.78.054, 18.78.060, 18.130.050 and SHB 1404, 1988 c 211. 88-18-005 (Order PM 768), § 308-117-090, filed 8/25/88. Statutory Authority: RCW 18.78.050. 84-01-061 (Order PL 452), § 308-117-090, filed 12/19/83.] Repealed by 97-13-100, filed 6/18/97, effective 7/19/97. Statutory Authority: Chapter 18.79 RCW.

246-838-110 Documents which indicate authorization to practice. [Statutory Authority: RCW 18.130.050 and 18.78.050. 94-08-050 § 246-838-110, filed 4/1/94, effective 5/2/94. Statutory Authority: RCW 18.78.050. 93-21-006, § 246-838-110, filed 10/7/93, effective 11/7/93. Statutory Authority: RCW 18.78.050 and 18.130.050. 92-02-046 (Order 231B), § 246-838-110, filed 12/27/91, effective 1/27/92. Statutory Authority: RCW 18.78.050. 91-13-023 (Order 175B), § 246-838-110, filed 6/11/91, effective 7/12/91; 91-01-078 (Order 109B), recodified as § 246-838-110, filed 12/17/90, effective 1/31/91. Statutory Authority: RCW 18.78.-050, 18.78.054, 18.78.060, 18.130.050 and SHB 1404, 1988 c 211. 88-18-005 (Order PM 768), § 308-117-095, filed 8/25/88.] Repealed by 97-13-100, filed 6/18/97, effective 7/19/97. Statutory Authority: Chapter 18.79 RCW.

246-838-120 Renewal of licenses. [Statutory Authority: RCW 18.78.050. 93-21-006, § 246-838-120, filed 10/7/93, effective 11/7/93. Statutory Authority: RCW 18.130.-175 and 18.78.050. 93-04-080 (Order 331B), § 246-838-120, filed 2/1/93, effective 3/4/93. Statutory Authority: RCW 18.78.050 and 18.130.050. 91-13-023 (Order 175B), § 246-838-120, filed 6/11/91, effective 7/12/91. Statutory Authority: RCW 18.78.050. 91-01-078 (Order 109B), recodified as § 246-838-120, filed 12/17/90, effective 1/31/91. Statutory Authority: RCW 18.78.050, 18.78.054, 18.78.060, 18.78.072, 18.78.090, 18.78.225, 18.130.050 and 70.24.270. 88-24-017 (Order PM 768), § 308-117-100, filed 12/1/88. Statutory Authority: RCW 18.78.050, 18.78.054, 18.78.060, 18.130.050 and SHB 1404, 1988 c 211. 88-18-005 (Order PM 768), § 308-117-100, filed 8/25/88. Statutory Authority: RCW 18.78.050, 18.130.050 (1) and (12) and 1986 c 259 §§ 19, 128 and 131. 86-18-031 (Order PM 612), § 308-117-100, filed 8/27/86. Statutory Authority: RCW 18.78.050. 84-01-061 (Order PL 452), § 308-117-100, filed 12/19/83. Formerly WAC 308-116-280.] Repealed by 97-13-100, filed 6/18/97, effective 7/19/97. Statutory Authority: Chapter 18.79 RCW.

246-838-121 Responsibility for maintaining mailing address. [Statutory Authority: RCW 18.78.050. 93-21-006, § 246-838-121, filed 10/7/93, effective 11/7/93.] Repealed by 97-13-100, filed 6/18/97, effective 7/19/97. Statutory Authority: Chapter 18.79 RCW.

246-838-130 Return to active status from inactive or lapsed status. [Statutory Authority: RCW 18.78.050. 93-21-006, § 246-838-130, filed 10/7/93, effective 11/7/93; 91-13-023 (Order 175B), § 246-838-130, filed 6/11/91, effective 7/12/91; 91-01-078 (Order 109B), recodified as § 246-838-130, filed 12/17/90, effective 1/31/91. Statutory Authority: RCW 18.78.050, 18.78.054, 18.78.060, 18.130.050 and SHB 1404, 1988 c 211. 88-18-005 (Order PM 768), § 308-117-105, filed 8/25/88.] Repealed by 97-13-100, filed 6/18/97, effective 7/19/97. Statutory Authority: Chapter 18.79 RCW.

246-838-140 Establishment of new practical nursing program. [Statutory Authority: RCW 18.78.050. 91-01-078 (Order 109B), recodified as § 246-838-140, filed 12/17/90, effective 1/31/91; 84-01-061 (Order PL 452), § 308-117-110, filed 12/19/83.] Repealed by 95-21-072, filed 10/16/95, effective 11/16/95. Statutory Authority: RCW 18.79.110.

246-838-150 Survey visits. [Statutory Authority: RCW 18.78.050. 91-01-078 (Order 109B), recodified as § 246-838-150, filed 12/17/90, effective 1/31/91; 84-01-061 (Order PL 452), § 308-117-120, filed 12/19/83.] Repealed by 95-21-072, filed 10/16/95, effective 11/16/95. Statutory Authority: RCW 18.79.110.

246-838-160 Board action following survey visits. [Statutory Authority: RCW 18.78.050. 91-01-078 (Order 109B), recodified as § 246-838-160, filed 12/17/90, effective 1/31/91. Statutory Authority: RCW 18.78.050 and 18.130.050. 87-17-021 (Order PM 672), § 308-117-130, filed 8/12/87. Statutory Authority: RCW 18.78.050. 84-01-061 (Order PL 452), § 308-117-130, filed 12/19/83.] Repealed by 95-21-072, filed 10/16/95, effective 11/16/95. Statutory Authority: RCW 18.79.110.

246-838-170 Termination of a suspension. [Statutory Authority: RCW 18.78.050. 91-01-078 (Order 109B), recodified as § 246-838-170, filed 12/17/90, effective 1/31/91; 84-01-061 (Order PL 452), § 308-117-140, filed 12/19/83.] Repealed by 95-21-072, filed 10/16/95, effective 11/16/95. Statutory Authority: RCW 18.79.110.

246-838-180 Student records. [Statutory Authority: RCW 18.130.-050 and 18.78.050. 94-08-050 § 246-838-180, filed 4/1/94, effective 5/2/94. Statutory Authority: RCW 18.78.050. 91-01-078 (Order 109B), recodified as § 246-838-180, filed 12/17/90, effective 1/31/91; 84-01-061 (Order PL 452), § 308-117-150, filed 12/19/83.] Repealed by 95-21-072, filed 10/16/95, effective 11/16/95. Statutory Authority: RCW 18.79.110.

246-838-190 Statement of completion of the course. [Statutory Authority: RCW 18.78.050. 91-01-078 (Order 109B), recodified as § 246-838-190, filed 12/17/90, effective 1/31/91; 84-01-061 (Order PL 452), § 308-117-160, filed 12/19/83.] Repealed by 95-21-072, filed 10/16/95, effective 11/16/95. Statutory Authority: RCW 18.79.-110.

246-838-200 Readmissions, transfers. [Statutory Authority: RCW 18.78.050. 91-01-078 (Order 109B), recodified as § 246-838-200, filed 12/17/90, effective 1/31/91; 84-01-061 (Order PL 452), § 308-117-170, filed 12/19/83. Formerly WAC 308-116-098.] Repealed by 95-21-072, filed 10/16/95, effective 11/16/95. Statutory Authority: RCW 18.79.110.

246-838-210 Clinical practice areas. [Statutory Authority: RCW 18.78.050. 91-13-023 (Order 175B), § 246-838-210, filed 6/11/91, effective 7/12/91; 91-01-078 (Order 109B), recodified as § 246-838-210, filed 12/17/90, effective 1/31/91; 84-01-061 (Order PL 452), § 308-117-180, filed 12/19/83. Formerly WAC 308-116-052.] Repealed by 95-21-072, filed 10/16/95, effective 11/16/95. Statutory Authority: RCW 18.79.110.

246-838-220 Structure for curriculum implementation. [Statutory Authority: RCW 18.78.050. 91-01-078 (Order 109B), recodified as § 246-838-220, filed 12/17/90, effective 1/31/91; 84-01-061 (Order PL 452), § 308-117-190, filed 12/19/83.] Repealed by 95-21-072, filed 10/16/95, effective 11/16/95. Statutory Authority: RCW 18.79.-110.

246-838-230 Curriculum standards in an approved practical nursing program. [Statutory Authority: RCW 18.78.050 and 18.130.050. 92-02-046 (Order 231B), § 246-838-230, filed 12/27/91, effective 1/27/92. Statutory Authority: RCW 18.78.050. 91-01-078 (Order 109B), recodified as § 246-838-230, filed 12/17/90, effective 1/31/91. Statutory Authority: RCW 18.78.050 and 18.130.050. 87-17-021 (Order PM 672), § 308-117-200, filed 8/12/87. Statutory Authority: RCW 18.78.050. 84-01-061 (Order PL 452), § 308-117-200, filed 12/19/83.] Repealed by 95-21-072, filed 10/16/95, effective 11/16/95. Statutory Authority: RCW 18.79.110.

246-838-240 Curriculum content. [Statutory Authority: RCW 18.78.050. 92-17-023 (Order 296B), § 246-838-240, filed 8/10/92, effective 9/10/92; 91-01-078 (Order 109B), recodified as § 246-838-240, filed 12/17/90, effective 1/31/91. Statutory Authority: RCW 18.78.050 and 18.130.050. 87-17-021 (Order PM 672), § 308-117-300, filed 8/12/87. Statutory Authority: RCW 18.78.-050. 84-01-061 (Order PL 452), § 308-117-300, filed 12/19/83.] Repealed by 95-21-072, filed 10/16/95,

effective 11/16/95. Statutory Authority: RCW 18.79.-110.

246-838-250 AIDS education and training. [Statutory Authority: RCW 70.24.270. 91-13-023 (Order 175B), § 246-838-250, filed 6/11/91, effective 7/12/91. Statutory Authority: RCW 18.78.050. 91-01-078 (Order 109B), recodified as § 246-838-250, filed 12/17/90, effective 1/31/91. Statutory Authority: RCW 18.78.050, 18.78.054, 18.78.060, 18.78.072, 18.78.090, 18.78.225, 18.130.050 and 70.24.270. 88-24-017 (Order PM 768), § 308-117-360, filed 12/1/88.] Repealed by 97-13-100, filed 6/18/97, effective 7/19/97. Statutory Authority: Chapter 18.79 RCW.

246-838-260 Standards/competencies. [Statutory Authority: [RCW 18.78.050]. 91-13-023 (Order 175B), § 246-838-260, filed 6/11/91, effective 7/12/91; 91-01-078 (Order 109B), recodified as § 246-838-260, filed 12/17/90, effective 1/31/91; 84-01-061 (Order PL 452), § 308-117-400, filed 12/19/83.] Repealed by 97-13-100, filed 6/18/97, effective 7/19/97. Statutory Authority: Chapter 18.79 RCW.

246-838-270 Criteria for approved refresher course. [Statutory Authority: RCW 18.78.050. 93-21-006, § 246-838-270, filed 10/7/93, effective 11/7/93; 91-13-023 (Order 175B), § 246-838-270, filed 6/11/91, effective 7/12/91; 91-01-078 (Order 109B), recodified as § 246-838-270, filed 12/17/90, effective 1/31/91. Statutory Authority: RCW 18.78.050, 18.78.054, 18.78.060, 18.130.050 and SHB 1404, 1988 c 211. 88-18-005 (Order PM 768), § 308-117-410, filed 8/25/88.] Repealed by 97-13-100, filed 6/18/97, effective 7/19/97. Statutory Authority: Chapter 18.79 RCW.

246-838-280 Scope of practice—Advisory opinions. [Statutory Authority: RCW 18.78.050. 91-01-078 (Order 109B), recodified as § 246-838-280, filed 12/17/90, effective 1/31/91. Statutory Authority: RCW 18.78.050, 18.78.-054, 18.78.060, 18.130.050 and SHB 1404, 1988 c 211. 88-18-005 (Order PM 768), § 308-117-420, filed 8/25/88.] Repealed by 97-13-100, filed 6/18/97, effective 7/19/97. Statutory Authority: Chapter 18.79 RCW.

246-838-290 Terms used in WAC 246-838-290 through 246-838-310. [Statutory Authority: RCW 18.78.050 and 18.130.050. 92-02-046 (Order 231B), § 246-838-290, filed 12/27/91, effective 1/27/92. Statutory Authority: RCW 18.78.050. 91-01-078 (Order 109B), recodified as § 246-838-290, filed 12/17/90, effective 1/31/91. Statutory Authority: RCW 18.78.050, [18.78.]054, 18.130.-050 and [18.130.]175. 89-07-005 (Order PM 823), § 308-117-460, filed 3/3/89.] Repealed by 97-13-100, filed 6/18/97, effective 7/19/97. Statutory Authority: Chapter 18.79 RCW.

246-838-300 Approval of substance abuse monitoring programs. [Statutory Authority: RCW 18.78.050. 91-01-078 (Order 109B), recodified as § 246-838-300, filed 12/17/90, effective 1/31/91. Statutory Authority: RCW 18.78.050, [18.78.]054, 18.130.050 and [18.130.]175. 89-07-005 (Order PM 823), § 308-117-470, filed 3/3/89.] Repealed by 97-13-100, filed 6/18/97, effective 7/19/97. Statutory Authority: Chapter 18.79 RCW.

246-838-310 Participation in approved monitoring program. [Statutory Authority: RCW 18.78.050 and 18.130.050. 92-02-046 (Order 231B), § 246-838-310, filed 12/27/91, effective 1/27/92. Statutory Authority: RCW 18.78.050. 91-01-078 (Order 109B), recodified as § 246-838-310, filed 12/17/90, effective 1/31/91. Statutory Authority: RCW 18.78.050, [18.78.]054, 18.130.050 and [18.130.]175. 89-07-005 (Order PM 823), § 308-117-480, filed 3/3/89.] Repealed by 97-13-100, filed 6/18/97, effective 7/19/97. Statutory Authority: Chapter 18.79 RCW.

246-838-320 Executive secretary qualifications. [Statutory Authority: RCW 18.78.050. 92-17-023 (Order 296B), § 246-838-320, filed 8/10/92, effective 9/10/92.] Repealed by 93-21-006, filed 10/7/93, effective 11/7/93. Statutory Authority: RCW 18.78.050.

246-838-330 Impaired practical nurse program—Content—License surcharge. [Statutory Authority: RCW 18.130.175 and 18.78.050. 93-04-080 (Order 331B), § 246-838-330, filed 2/1/93, effective 3/4/93.] Repealed by 97-13-100, filed 6/18/97, effective 7/19/97. Statutory Authority: Chapter 18.79 RCW.

246-838-340 Executive secretary qualifications. [Statutory Authority: RCW 18.78.050. 93-21-006, § 246-838-340, filed 10/7/93, effective 11/7/93.] Repealed by 97-13-100, filed 6/18/97, effective 7/19/97. Statutory Authority: Chapter 18.79 RCW.

246-838-350 Appearance and practice before agency—Standards of ethical conduct. [Statutory Authority: RCW 18.78.050. 93-21-006, § 246-838-350, filed 10/7/93, effective 11/7/93.] Repealed by 97-13-100, filed 6/18/97, effective 7/19/97. Statutory Authority: Chapter 18.79 RCW.

246-838-360 Adjudicative proceedings procedural rules. [Statutory Authority: RCW 18.78.050. 93-21-006, § 246-838-360, filed 10/7/93, effective 11/7/93.] Repealed by 97-13-100, filed 6/18/97, effective 7/19/97. Statutory Authority: Chapter 18.79 RCW.

246-838-990 Practical nurse fees. [Statutory Authority: RCW 43.70.-250. 94-08-102, § 246-838-990, filed 4/6/94, effective 5/7/94; 93-07-023 (Order 344), § 246-838-990, filed 3/9/93, effective 4/9/93; 91-13-002 (Order 173), § 246-838-990, filed 6/6/91, effective 7/7/91. Statutory Authority: RCW 43.70.040. 91-02-049 (Order 121), recodified as § 246-838-990, filed 12/27/90, effective 1/31/91. Statutory Authority: RCW 43.70.250. 90-04-094 (Order 029), § 308-117-500, filed 2/7/90, effective 3/10/90. Statutory Authority: RCW 43.24.086. 88-20-075 (Order 783), § 308-117-500, filed 10/5/88; 87-10-028 (Order PM 650), § 308-117-500, filed 5/1/87.] Repealed by 95-12-021, filed 5/31/95, effective 7/1/95. Statutory Authority: RCW 18.79.200.

Chapter 246-839
REGISTERED NURSES

246-839-010 Definitions. [Statutory Authority: RCW 18.88.080. 92-02-023 (Order 230B), § 246-839-010, filed 12/23/91, effective 1/23/92; 91-07-067 (Order 152B), § 246-839-010, filed 3/20/91, effective 4/20/91; 91-07-049 (Order 116B), recodified as § 246-839-010, filed 3/18/91, effective 4/18/91. Statutory Authority: RCW 18.88.-080, 18.88.140, 18.130.175 and 70.24.270. 88-23-035 (Order PM 795), § 308-120-100, filed 11/9/88. Statutory Authority: RCW 18.88.080, 18.88.086, 18.88.110, 18.88.120, 18.88.140, 18.88.160, 18.88.190, 18.88.200, 18.88.220, 18.130.050 and 1988 c 211. 88-16-034 (Order PM 751), § 308-120-100, filed 7/28/88. Statutory Authority: RCW 18.88.080. 81-04-007 (Order PL 370), § 308-120-100, filed 1/27/81; 80-04-072 (Order PL 339), § 308-120-100, filed 3/27/80; Order PL-124, § 308-120-100, filed 5/26/72.] Repealed by 97-13-100, filed 6/18/97, effective 7/19/97. Statutory Authority: Chapter 18.79 RCW.

246-839-020 Documents which indicate authorization to practice registered nursing in Washington. [Statutory Authority: RCW 18.88.080. 94-20-081, § 246-839-020, filed 10/4/94 effective 11/4/94. Statutory Authority: RCW 18.88.140. 94-07-012, § 246-839-020, filed 3/4/94, effective 4/4/94. Statutory Authority: RCW 18.88.080. 91-23-077 (Order 214B), § 246-839-020, filed 11/19/91, effective 12/20/91; 91-07-049 (Order 116B), recodified as § 246-839-020, filed 3/18/91, effective 4/18/91. Statutory Authority: RCW 18.88.080, [18.88].086, [18.88].110, [18.88].130, [18.88].140, [18.88].175, [18.88].280 and 18.130.050. 89-12-033 (Order PM 847), § 308-120-170, filed 6/1/89. Statutory Authority: RCW 18.88.080, 18.88.086, 18.88.110, 18.88.120, 18.88.140, 18.88.160, 18.88.190, 18.88.200, 18.88.220, 18.130.050 and 1988 c 211. 88-16-034 (Order PM 751), § 308-120-170, filed 7/28/88. Statutory Authority: RCW 18.88.080. 85-24-027 (Order PL 569), § 308-120-170, filed 11/26/85; 81-10-026 (Order PL 377), § 308-120-170, filed 4/28/81; Order PL 196, § 308-120-170, filed 7/25/75; Order PL-124, § 308-120-170, filed 5/26/72.] Repealed by 97-13-100, filed 6/18/97, effective 7/19/97. Statutory Authority: Chapter 18.79 RCW.

246-839-030 Qualification/eligibility to take the licensing examination. [Statutory Authority: RCW 18.88.140. 94-07-012, § 246-839-030, filed 3/4/94, effective 4/4/94. Statutory Authority: RCW 18.88.080. 91-23-077 (Order 214B), § 246-839-030, filed 11/19/91, effective 12/20/91; 91-07-049 (Order 116B), recodified as § 246-839-030, filed 3/18/91, effective 4/18/91. Statutory Authority: RCW 18.88.080, 18.88.140, 18.130.175 and 70.24.270. 88-23-035 (Order PM 795), § 308-120-161, filed 11/9/88. Statutory Authority: RCW 18.88.080. 82-01-012 (Order PL 387), § 308-120-161, filed 12/7/81; 81-04-007 (Order PL 370), § 308-120-161, filed 1/27/81.]

Repealed by 97-17-015, filed 8/8/97, effective 9/8/97. Statutory Authority: RCW 18.79.160.

246-839-040 Filing of application for licensing examination. [Statutory Authority: RCW 18.88.140. 94-07-012, § 246-839-040, filed 3/4/94, effective 4/4/94. Statutory Authority: RCW 18.88.080. 91-07-049 (Order 116B), recodified as § 246-839-040, filed 3/18/91, effective 4/18/91. Statutory Authority: RCW 18.88.080, 18.88.086, 18.130.050, 18.130.070 and 18.130.180. 87-23-050 (Order PM 691), § 308-120-162, filed 11/18/87. Statutory Authority: RCW 18.88.030(2), 18.88.080 and 18.88.140. 82-22-091 (Order PL 410), § 308-120-162, filed 11/3/82. Statutory Authority: RCW 18.88.080. 81-04-007 (Order PL 370), § 308-120-162, filed 1/27/81.] Repealed by 97-13-100, filed 6/18/97, effective 7/19/97. Statutory Authority: Chapter 18.79 RCW.

246-839-050 Licensing examination. [Statutory Authority: RCW 18.88.140. 94-07-012, § 246-839-050, filed 3/4/94, effective 4/4/94. Statutory Authority: RCW 18.88.080. 91-07-049 (Order 116B), recodified as § 246-839-050, filed 3/18/91, effective 4/18/91. Statutory Authority: RCW 18.88.080, 18.88.086, 18.88.110, 18.88.120, 18.88.140, 18.88.160, 18.88.190, 18.88.200, 18.88.220, 18.130.050 and 1988 c 211. 88-16-034 (Order PM 751), § 308-120-163, filed 7/28/88. Statutory Authority: RCW 18.88.030(2), 18.88.080 and 18.88.140. 82-22-091 (Order PL 410), § 308-120-163, filed 11/3/82. Statutory Authority: RCW 18.88.080. 81-04-007 (Order PL 370), § 308-120-163, filed 1/27/81.] Repealed by 97-13-100, filed 6/18/97, effective 7/19/97. Statutory Authority: Chapter 18.79 RCW.

246-839-060 Release of results of examination. [Statutory Authority: RCW 18.88.140. 94-07-012, § 246-839-060, filed 3/4/94, effective 4/4/94. Statutory Authority: RCW 18.88.080. 91-23-077 (Order 214B), § 246-839-060, filed 11/19/91, effective 12/20/91; 91-07-049 (Order 116B), recodified as § 246-839-060, filed 3/18/91, effective 4/18/91. Statutory Authority: RCW 18.88.-080, 18.88.086, 18.88.110, 18.88.120, 18.88.140, 18.88.160, 18.88.190, 18.88.200, 18.88.220, 18.130.050 and 1988 c 211. 88-16-034 (Order PM 751), § 308-120-164, filed 7/28/88. Statutory Authority: RCW 18.88.030(2), 18.88.080 and 18.88.140. 82-22-091 (Order PL 410), § 308-120-164, filed 11/3/82. Statutory Authority: RCW 18.88.080. 81-04-007 (Order PL 370), § 308-120-164, filed 1/27/81.] Repealed by 97-13-100, filed 6/18/97, effective 7/19/97. Statutory Authority: Chapter 18.79 RCW.

246-839-070 Failures—Repeat examination. [Statutory Authority: RCW 18.88.140. 94-07-012, § 246-839-070, filed 3/4/94, effective 4/4/94. Statutory Authority: RCW 18.88.080. 91-07-049 (Order 116B), recodified as § 246-839-070, filed 3/18/91, effective 4/18/91; 90-04-059, § 308-120-165, filed 2/2/90, effective 3/5/90. Statutory Authority: RCW 18.88.080, 18.88.086, 18.130.-050, 18.130.070 and 18.130.180. 87-23-050 (Order PM 691), § 308-120-165, filed 11/18/87. Statutory Authority: RCW 18.88.030(2), 18.88.080 and 18.88.140. 82-22-091 (Order PL 410), § 308-120-165, filed 11/3/82. Statutory Authority: RCW 18.88.080. 81-04-007 (Order PL 370), § 308-120-165, filed 1/27/81.] Repealed by 97-13-100, filed 6/18/97, effective 7/19/97. Statutory Authority: Chapter 18.79 RCW.

246-839-080 Applicants previously licensed in a foreign country. [Statutory Authority: RCW 18.88.140. 94-07-012, § 246-839-080, filed 3/4/94, effective 4/4/94. Statutory Authority: RCW 18.88.080. 91-23-077 (Order 214B), § 246-839-080, filed 11/19/91, effective 12/20/91; 91-07-049 (Order 116B), recodified as § 246-839-080, filed 3/18/91, effective 4/18/91. Statutory Authority: RCW 18.88.080, 18.88.140, 18.130.175 and 70.24.270. 88-23-035 (Order PM 795), § 308-120-166, filed 11/9/88. Statutory Authority: RCW 18.88.030(2), 18.88.080 and 18.88.140. 82-22-091 (Order PL 410), § 308-120-166, filed 11/3/82. Statutory Authority: RCW 18.88.080. 81-04-007 (Order PL 370), § 308-120-166, filed 1/27/81.] Repealed by 97-13-100, filed 6/18/97, effective 7/19/97. Statutory Authority: Chapter 18.79 RCW.

246-839-090 Licensure by interstate endorsement. [Statutory Authority: RCW 18.88.140. 94-07-012, § 246-839-090, filed 3/4/94, effective 4/4/94. Statutory Authority: RCW 18.88.080. 91-23-077 (Order 214B), § 246-839-090, filed 11/19/91, effective 12/20/91; 91-07-049 (Order 116B), recodified as § 246-839-090, filed 3/18/91, effective 4/18/91; 91-07-032 (Order 151B), § 308-120-168, filed 3/15/91, effective 4/15/91. Statutory Authority: RCW 18.88.080, [18.88].086, [18.88].130, [18.88].140, [18.88].150, 18.130.050 and 70.24.270. 89-12-032 (Order PM 846), § 308-120-168, filed 6/1/89. Statutory Authority: RCW 18.88.080, 18.88.140, 18.130.175 and 70.24.270. 88-23-035 (Order PM 795), § 308-120-168, filed 11/9/88. Statutory Authority: RCW 18.88.080. 81-04-007 (Order PL 370), § 308-120-168, filed 1/27/81.] Repealed by 97-13-100, filed 6/18/97, effective 7/19/97. Statutory Authority: Chapter 18.79 RCW.

246-839-100 AIDS education and training. [Statutory Authority: RCW 18.88.080 and 70.24.270. 91-23-077 (Order 214B), § 246-839-100, filed 11/19/91, effective 12/20/91. Statutory Authority: RCW 70.24.270. 91-07-049 (Order 116B), recodified as § 246-839-100, filed 3/18/91, effective 4/18/91; 91-07-032 (Order 151B), § 308-120-610, filed 3/15/91, effective 4/15/91. Statutory Authority: RCW 18.88.080, 18.88.140, 18.130.175 and 70.24.270. 88-23-035 (Order PM 795), § 308-120-610, filed 11/9/88.] Repealed by 97-13-100, filed 6/18/97, effective 7/19/97. Statutory Authority: Chapter 18.79 RCW.

246-839-105 Brief adjudicative proceedings—Denials based on failure to meet education, experience, or examination prerequisites for licensure. [Statutory Authority: RCW 18.88.080. 91-19-102 (Order 198B), § 246-839-105, filed 9/18/91, effective 10/19/91.] Repealed by 97-13-100, filed 6/18/97, effective 7/19/97. Statutory Authority: Chapter 18.79 RCW.

246-839-110 Renewal of licenses. [Statutory Authority: RCW 18.88.080. 91-23-077 (Order 214B), § 246-839-110, filed 11/19/91, effective 12/20/91; 91-07-049 (Order 116B), recodified as § 246-839-110, filed 3/18/91, effective 4/18/91. Statutory Authority: RCW 18.88.-080, 18.88.140, 18.130.175 and 70.24.270. 88-23-035 (Order PM 795), § 308-120-180, filed 11/9/88. Statutory Authority: RCW 18.88.080, 18.88.086, 18.88.110, 18.88.120, 18.88.140, 18.88.160, 18.88.190, 18.88.200, 18.88.220, 18.130.050 and 1988 c 211. 88-16-034 (Order PM 751), § 308-120-180, filed 7/28/88. Statutory Authority: RCW 18.88.080. 83-24-048 (Order PL 449), § 308-120-180, filed 12/2/83; Order PL 216, § 308-120-180, filed 11/5/75; Order PL-134, § 308-120-180, filed 10/13/72.] Repealed by 97-13-100, filed 6/18/97, effective 7/19/97. Statutory Authority: Chapter 18.79 RCW.

246-839-115 Responsibility for maintaining mailing address on file with the board. [Statutory Authority: RCW 18.88.080 and 18.88.086. 93-11-007 (Order 361B), § 246-839-115, filed 5/5/93, effective 6/5/93.] Repealed by 97-13-100, filed 6/18/97, effective 7/19/97. Statutory Authority: Chapter 18.79 RCW.

246-839-120 Return to active status from inactive or lapsed status. [Statutory Authority: RCW 18.88.080. 91-23-077 (Order 214B), § 246-839-120, filed 11/19/91, effective 12/20/91; 91-07-049 (Order 116B), recodified as § 246-839-120, filed 3/18/91, effective 4/18/91. Statutory Authority: RCW 18.88.080, 18.88.086, 18.88.110, 18.88.120, 18.88.140, 18.88.160, 18.88.190, 18.88.200, 18.88.220, 18.130.050 and 1988 c 211. 88-16-034 (Order PM 751), § 308-120-185, filed 7/28/88. Statutory Authority: RCW 18.88.080. 81-04-007 (Order PL 370), § 308-120-185, filed 1/27/81; 78-05-085 (Order PL 288, Resolution 78-143), § 308-120-185, filed 5/2/78; Order PL 258, § 308-120-185, filed 12/7/76. Formerly WAC 308-120-18001.] Repealed by 97-13-100, filed 6/18/97, effective 7/19/97. Statutory Authority: Chapter 18.79 RCW.

246-839-130 Criteria for approved refresher course. [Statutory Authority: RCW 18.88.080. 91-07-049 (Order 116B), recodified as § 246-839-130, filed 3/18/91, effective 4/18/91. Statutory Authority: RCW 18.88.080, 18.88.-086 and 18.130.050. 88-05-010 (Order PM 704), § 308-120-186, filed 2/9/88. Statutory Authority: RCW 18.88.080. 79-06-025 (Order PL-305), § 308-120-186, filed 5/15/79.] Repealed by 97-13-100, filed 6/18/97, effective 7/19/97. Statutory Authority: Chapter 18.79 RCW.

246-839-300 Advanced registered nurse practitioner. [Statutory Authority: RCW 18.79.110. 95-01-107, § 246-839-300, filed 12/21/94, effective 1/21/95. Statutory Authority: RCW 18.88.030(2) and 18.88.080. 92-20-047 (Order 306B), § 246-839-300, filed 9/30/92, effective 10/31/92.

Statutory Authority: RCW 18.88.080. 91-07-049 (Order 116B), recodified as § 246-839-300, filed 3/18/91, effective 4/18/91; 85-24-027 (Order PL 569), § 308-120-300, filed 11/26/85. Statutory Authority: RCW 18.88.030(2), 18.88.080 and 18.88.140. 82-22-091 (Order PL 410), § 308-120-300, filed 11/3/82; Order PL 270, § 308-120-300, filed 6/16/77.] Repealed by 97-13-100, filed 6/18/97, effective 7/19/97. Statutory Authority: Chapter 18.79 RCW.

246-839-305 Criteria for formal advanced nursing education meeting the requirement for ARNP licensure. [Statutory Authority: RCW 18.79.110. 95-01-107, § 246-839-305, filed 12/21/94, effective 1/21/95.] Repealed by 97-13-100, filed 6/18/97, effective 7/19/97. Statutory Authority: Chapter 18.79 RCW.

246-839-310 Use of nomenclature. [Statutory Authority: RCW 18.79.110. 95-01-107, § 246-839-310, filed 12/21/94, effective 1/21/95. Statutory Authority: RCW 18.88.030(2) and 18.88.080. 92-20-047 (Order 306B), § 246-839-310, filed 9/30/92, effective 10/31/92. Statutory Authority: RCW 18.88.080. 91-23-077 (Order 214B), § 246-839-310, filed 11/19/91, effective 12/20/91; 91-07-049 (Order 116B), recodified as § 246-839-310, filed 3/18/91, effective 4/18/91. Statutory Authority: RCW 18.88.080, [18.88].086, [18.88].110, [18.88].130, [18.88].140, [18.88].175, [18.88].280 and 18.130.050. 89-12-033 (Order PM 847), § 308-120-305, filed 6/1/89. Statutory Authority: RCW 18.88.080. 85-24-027 (Order PL 569), § 308-120-305, filed 11/26/85. Statutory Authority: RCW 18.88.030(2), 18.88.080 and 18.88.140. 82-22-091 (Order PL 410), § 308-120-305, filed 11/3/82; Order PL 270, § 308-120-305, filed 6/16/77.] Repealed by 97-13-100, filed 6/18/97, effective 7/19/97. Statutory Authority: Chapter 18.79 RCW.

246-839-315 Clinical specialist in psychiatric/mental health nursing. [Statutory Authority: RCW 18.79.110. 95-01-107, § 246-839-315, filed 12/21/94, effective 1/21/95.] Repealed by 97-13-100, filed 6/18/97, effective 7/19/97. Statutory Authority: Chapter 18.79 RCW.

246-839-320 Certification and certification program. [Statutory Authority: RCW 18.88.030(2) and 18.88.080. 92-20-047 (Order 306B), § 246-839-320, filed 9/30/92, effective 10/31/92. Statutory Authority: RCW 18.88.080. 91-23-077 (Order 214B), § 246-839-320, filed 11/19/91, effective 12/20/91; 91-07-049 (Order 116B), recodified as § 246-839-320, filed 3/18/91, effective 4/18/91; 85-24-027 (Order PL 569), § 308-120-315, filed 11/26/85. Statutory Authority: RCW 18.88.030 (2), 18.88.080 and 18.88.140. 82-22-091 (Order PL 410), § 308-120-315, filed 11/3/82.] Repealed by 97-13-100, filed 6/18/97, effective 7/19/97. Statutory Authority: Chapter 18.79 RCW.

246-839-330 Board approval of certification programs. [Statutory Authority: RCW 18.88.030(2) and 18.88.080. 92-20-047 (Order 306B), § 246-839-330, filed 9/30/92, effective 10/31/92. Statutory Authority: RCW 18.88.080. 91-23-077 (Order 214B), § 246-839-330, filed 11/19/91, effective 12/20/91; 91-07-049 (Order 116B), recodified as § 246-839-330, filed 3/18/91, effective 4/18/91; 85-24-027 (Order PL 569), § 308-120-325, filed 11/26/85. Statutory Authority: RCW 18.88.030 (2), 18.88.080 and 18.88.140. 82-22-091 (Order PL 410), § 308-120-325, filed 11/3/82.] Repealed by 97-13-100, filed 6/18/97, effective 7/19/97. Statutory Authority: Chapter 18.79 RCW.

246-839-340 Application requirements for ARNP. [Statutory Authority: RCW 18.79.110. 95-01-107, § 246-839-340, filed 12/21/94, effective 1/21/95. Statutory Authority: RCW 18.88.080. 91-23-077 (Order 214B), § 246-839-340, filed 11/19/91, effective 12/20/91; 91-07-049 (Order 116B), recodified as § 246-839-340, filed 3/18/91, effective 4/18/91. Statutory Authority: RCW 18.88.030 (2), 18.88.080, 18.88.086, 18.88.140 and 18.130.050. 88-07-049 (Order PM 717), § 308-120-335, filed 3/14/88. Statutory Authority: RCW 18.88.080. 85-24-027 (Order PL 569), § 308-120-335, filed 11/26/85. Statutory Authority: RCW 18.88.030(2), 18.88.080 and 18.88.140. 82-22-091 (Order PL 410), § 308-120-335, filed 11/3/82.] Repealed by 97-13-100, filed 6/18/97, effective 7/19/97. Statutory Authority: Chapter 18.79 RCW.

246-839-345 ARNP designation in more than one area of specialty. [Statutory Authority: RCW 18.79.110. 95-01-107, § 246-839-345, filed 12/21/94, effective 1/21/95.] Repealed by 97-13-100, filed 6/18/97, effective 7/19/97. Statutory Authority: Chapter 18.79 RCW.

246-839-350 Application requirements for ARNP interim permit. [Statutory Authority: RCW 18.88.080. 93-22-052, § 246-839-350, filed 10/28/93, effective 11/28/93; 91-23-077 (Order 214B), § 246-839-350, filed 11/19/91, effective 12/20/91; 91-07-049 (Order 116B), recodified as § 246-839-350, filed 3/18/91, effective 4/18/91. Statutory Authority: RCW 18.88.080, 18.88.086, 18.88.110, 18.88.120, 18.88.140, 18.88.160, 18.88.190, 18.88.200, 18.88.220, 18.130.050 and 1988 c 211. 88-16-034 (Order PM 751), § 308-120-338, filed 7/28/88.] Repealed by 97-13-100, filed 6/18/97, effective 7/19/97. Statutory Authority: Chapter 18.79 RCW.

246-839-360 Renewal of ARNP designation. [Statutory Authority: RCW 18.88.080. 93-22-052, § 246-839-360, filed 10/28/93, effective 11/28/93; 91-23-077 (Order 214B), § 246-839-360, filed 11/19/91, effective 12/20/91; 91-07-049 (Order 116B), recodified as § 246-839-360, filed 3/18/91, effective 4/18/91; 85-24-027 (Order PL 569), § 308-120-345, filed 11/26/85. Statutory Authority: RCW 18.88.030 and 18.88.080. 83-04-051 (Order PL 424), § 308-120-345, filed 2/1/83.] Repealed by 97-13-100, filed 6/18/97, effective 7/19/97. Statutory Authority: Chapter 18.79 RCW.

246-839-365 Return to active ARNP status from inactive or lapsed status. [Statutory Authority: RCW 18.79.110. 95-01-107, § 246-839-365, filed 12/21/94, effective 1/21/95.] Repealed by 97-13-100, filed 6/18/97, effective 7/19/97. Statutory Authority: Chapter 18.79 RCW.

246-839-370 Termination of ARNP designation by the board. [Statutory Authority: RCW 18.88.080 and 18.130.050. 91-23-077 (Order 214B), § 246-839-370, filed 11/19/91, effective 12/20/91. Statutory Authority: RCW 18.88.080. 91-07-049 (Order 116B), recodified as § 246-839-370, filed 3/18/91, effective 4/18/91. Statutory Authority: RCW 18.88.080, 18.88.086 and 18.130.050. 88-18-082 (Order PM 760), § 308-120-360, filed 9/6/88. Statutory Authority: RCW 18.88.080. 85-24-027 (Order PL 569), § 308-120-360, filed 11/26/85. Statutory Authority: RCW 18.88.030(2), 18.88.080 and 18.88.140. 82-22-091 (Order PL 410), § 308-120-360, filed 11/3/82.] Repealed by 97-13-100, filed 6/18/97, effective 7/19/97. Statutory Authority: Chapter 18.79 RCW.

246-839-400 ARNP with prescriptive authorization. [Statutory Authority: RCW 18.88.080. 93-22-052, § 246-839-400, filed 10/28/93, effective 11/28/93; 91-07-049 (Order 116B), recodified as § 246-839-400, filed 3/18/91, effective 4/18/91; 85-24-027 (Order PL 569), § 308-120-400, filed 11/26/85; 83-16-065 (Order PL 441), § 308-120-400, filed 8/2/83. Statutory Authority: RCW 18.88.030(2), 18.88.080 and 18.88.140. 82-22-091 (Order PL 410), § 308-120-400, filed 11/3/82. Statutory Authority: RCW 18.88.080. 79-09-038 (Order PL-310), § 308-120-400, filed 8/17/79.] Repealed by 97-13-100, filed 6/18/97, effective 7/19/97. Statutory Authority: Chapter 18.79 RCW.

246-839-410 Application requirements for ARNP with prescriptive authority. [Statutory Authority: RCW 18.88.080. 93-22-052, § 246-839-410, filed 10/28/93, effective 11/28/93; 91-23-077 (Order 214B), § 246-839-410, filed 11/19/91, effective 12/20/91; 91-07-049 (Order 116B), recodified as § 246-839-410, filed 3/18/91, effective 4/18/91; 85-24-027 (Order PL 569), § 308-120-410, filed 11/26/85. Statutory Authority: RCW 18.88.030(2), 18.88.080 and 18.88.140. 82-22-091 (Order PL 410), § 308-120-410, filed 11/3/82. Statutory Authority: RCW 18.88.080. 81-04-007 (Order PL 370), § 308-120-410, filed 1/27/81; 79-09-038 (Order PL-310), § 308-120-410, filed 8/17/79.] Repealed by 97-13-100, filed 6/18/97, effective 7/19/97. Statutory Authority: Chapter 18.79 RCW.

246-839-420 Authorized prescriptions by the ARNP with prescriptive authority. [Statutory Authority: RCW 18.88.080. 93-22-052, § 246-839-420, filed 10/28/93, effective 11/28/93; 91-07-049 (Order 116B), recodified as § 246-839-420, filed 3/18/91, effective 4/18/91; 85-24-027 (Order PL 569), § 308-120-420, filed 11/26/85. Statutory Authority: RCW 18.88.030(2), 18.88.080 and 18.88.140. 82-22-091 (Order PL 410), § 308-120-420, filed 11/3/82. Statutory Authority: RCW 18.88.080. 81-04-007 (Order PL 370), § 308-120-420, filed 1/27/81; 79-09-038 (Order PL-310), § 308-120-420, filed

8/17/79.] Repealed by 97-13-100, filed 6/18/97, effective 7/19/97. Statutory Authority: Chapter 18.79 RCW.

246-839-430 Termination of ARNP prescriptive authorization. [Statutory Authority: RCW 18.88.080. 91-23-077 (Order 214B), § 246-839-430, filed 11/19/91, effective 12/20/91; 91-07-049 (Order 116B), recodified as § 246-839-430, filed 3/18/91, effective 4/18/91; 85-24-027 (Order PL 569), § 308-120-430, filed 11/26/85. Statutory Authority: RCW 18.88.030(2), 18.88.080 and 18.88.140. 82-22-091 (Order PL 410), § 308-120-430, filed 11/3/82. Statutory Authority: RCW 18.88.080. 79-09-038 (Order PL-310), § 308-120-430, filed 8/17/79.] Repealed by 97-13-100, filed 6/18/97, effective 7/19/97. Statutory Authority: Chapter 18.79 RCW.

246-839-440 Prescriptive authorization period. [Statutory Authority: RCW 18.88.080. 91-23-077 (Order 214B), § 246-839-440, filed 11/19/91, effective 12/20/91; 91-07-049 (Order 116B), recodified as § 246-839-440, filed 3/18/91, effective 4/18/91; 85-24-027 (Order PL 569), § 308-120-440, filed 11/26/85. Statutory Authority: RCW 18.88.030(2), 18.88.080 and 18.88.140. 82-22-091 (Order PL 410), § 308-120-440, filed 11/3/82. Statutory Authority: RCW 18.88.080. 79-09-038 (Order PL-310), § 308-120-440, filed 8/17/79.] Repealed by 97-13-100, filed 6/18/97, effective 7/19/97. Statutory Authority: Chapter 18.79 RCW.

246-839-450 Renewal. [Statutory Authority: RCW 18.88.080. 91-23-077 (Order 214B), § 246-839-450, filed 11/19/91, effective 12/20/91; 91-07-049 (Order 116B), recodified as § 246-839-450, filed 3/18/91, effective 4/18/91; 85-24-027 (Order PL 569), § 308-120-450, filed 11/26/85. Statutory Authority: RCW 18.88.030(2), 18.88.080 and 18.88.140. 82-22-091 (Order PL 410), § 308-120-450, filed 11/3/82. Statutory Authority: RCW 18.88.080. 79-09-038 (Order PL-310), § 308-120-450, filed 8/17/79.] Repealed by 97-13-100, filed 6/18/97, effective 7/19/97. Statutory Authority: Chapter 18.79 RCW.

246-839-505 Philosophy governing approval of nursing education programs. [Statutory Authority: RCW 18.88.080. 91-07-049 (Order 116B), recodified as § 246-839-505, filed 3/18/91, effective 4/18/91. Statutory Authority: RCW 18.88.080, 18.88.086, 18.88.110, 18.88.120, 18.88.140, 18.88.160, 18.88.190, 18.88.200, 18.88.220, 18.130.050 and 1988 c 211. 88-16-034 (Order PM 751), § 308-120-505, filed 7/28/88. Statutory Authority: RCW 18.88.080. 80-04-072 (Order PL 339), § 308-120-505, filed 3/27/80.] Repealed by 95-21-072, filed 10/16/95, effective 11/16/95. Statutory Authority: RCW 18.79.-110.

246-839-506 Purposes of board approval of nursing education programs. [Statutory Authority: RCW 18.88.080. 91-07-049 (Order 116B), recodified as § 246-839-506, filed 3/18/91, effective 4/18/91. Statutory Authority: RCW 18.88.080, 18.88.086, 18.88.110, 18.88.120, 18.88.140, 18.88.160, 18.88.190, 18.88.200, 18.88.220, 18.130.050 and 1988 c 211. 88-16-034 (Order PM 751), § 308-120-506, filed 7/28/88. Statutory Authority: RCW 18.88.080. 80-04-072 (Order PL 339), § 308-120-506, filed 3/27/80.] Repealed by 95-21-072, filed 10/16/95, effective 11/16/95. Statutory Authority: RCW 18.79.-110.

246-839-525 Approval of nursing education programs. [Statutory Authority: RCW 18.88.080. 91-23-077 (Order 214B), § 246-839-525, filed 11/19/91, effective 12/20/91; 91-07-049 (Order 116B), recodified as § 246-839-525, filed 3/18/91, effective 4/18/91. Statutory Authority: RCW 18.88.080, 18.88.086, 18.88.110, 18.88.120, 18.88.140, 18.88.160, 18.88.190, 18.88.200, 18.88.220, 18.130.050 and 1988 c 211. 88-16-034 (Order PM 751), § 308-120-525, filed 7/28/88.] Repealed by 95-21-072, filed 10/16/95, effective 11/16/95. Statutory Authority: RCW 18.79.110.

246-839-530 Denial, conditional approval or withdrawal of approval. [Statutory Authority: RCW 18.88.080. 91-23-077 (Order 214B), § 246-839-530, filed 11/19/91, effective 12/20/91; 91-07-049 (Order 116B), recodified as § 246-839-530, filed 3/18/91, effective 4/18/91. Statutory Authority: RCW 18.88.080, 18.88.086, 18.88.110, 18.88.120, 18.88.140, 18.88.160, 18.88.190, 18.88.200, 18.88.220, 18.130.050 and 1988 c 211. 88-16-034 (Order PM 751), § 308-120-530, filed 7/28/88.] Repealed by 95-21-072, filed 10/16/95, effective 11/16/95. Statutory Authority: RCW 18.79.110.

246-839-535 Reinstatement of approval. [Statutory Authority: RCW 18.88.080. 91-23-077 (Order 214B), § 246-839-535, filed 11/19/91, effective 12/20/91; 91-07-049 (Order 116B), recodified as § 246-839-535, filed 3/18/91, effective 4/18/91. Statutory Authority: RCW 18.88.-080, 18.88.086, 18.88.110, 18.88.120, 18.88.140, 18.88.160, 18.88.190, 18.88.200, 18.88.220, 18.130.050 and 1988 c 211. 88-16-034 (Order PM 751), § 308-120-535, filed 7/28/88.] Repealed by 95-21-072, filed 10/16/95, effective 11/16/95. Statutory Authority: RCW 18.79.110.

246-839-540 Appeal of board decisions. [Statutory Authority: RCW 18.88.080. 91-23-077 (Order 214B), § 246-839-540, filed 11/19/91, effective 12/20/91; 91-07-049 (Order 116B), recodified as § 246-839-540, filed 3/18/91, effective 4/18/91. Statutory Authority: RCW 18.88.-080, 18.88.086, 18.88.110, 18.88.120, 18.88.140, 18.88.160, 18.88.190, 18.88.200, 18.88.220, 18.130.050 and 1988 c 211. 88-16-034 (Order PM 751), § 308-120-540, filed 7/28/88.] Repealed by 95-21-072, filed 10/16/95, effective 11/16/95. Statutory Authority: RCW 18.79.110.

246-839-545 Closing of an approved nursing education program. [Statutory Authority: RCW 18.88.080. 91-23-077 (Order 214B), § 246-839-545, filed 11/19/91, effective 12/20/91; 91-07-049 (Order 116B), recodified as § 246-839-545, filed 3/18/91, effective 4/18/91. Statutory Authority: RCW 18.88.080, 18.88.086, 18.88.110, 18.88.120, 18.88.140, 18.88.160, 18.88.190, 18.88.200, 18.88.220, 18.130.050 and 1988 c 211. 88-16-034 (Order PM 751), § 308-120-545, filed 7/28/88.] Repealed by 95-21-072, filed 10/16/95, effective 11/16/95. Statutory Authority: RCW 18.79.110.

246-839-550 Purpose, philosophy, and objectives for approved nursing education programs. [Statutory Authority: RCW 18.88.080. 91-07-049 (Order 116B), recodified as § 246-839-550, filed 3/18/91, effective 4/18/91. Statutory Authority: RCW 18.88.080, 18.88.086, 18.88.110, 18.88.120, 18.88.140, 18.88.160, 18.88.190, 18.88.200, 18.88.220, 18.130.050 and 1988 c 211. 88-16-034 (Order PM 751), § 308-120-550, filed 7/28/88.] Repealed by 95-21-072, filed 10/16/95, effective 11/16/95. Statutory Authority: RCW 18.79.110.

246-839-555 Organization and administration for approved nursing education programs. [Statutory Authority: RCW 18.88.080. 91-07-049 (Order 116B), recodified as § 246-839-555, filed 3/18/91, effective 4/18/91. Statutory Authority: RCW 18.88.080, 18.88.086, 18.88.110, 18.88.120, 18.88.140, 18.88.160, 18.88.190, 18.88.200, 18.88.220, 18.130.050 and 1988 c 211. 88-16-034 (Order PM 751), § 308-120-555, filed 7/28/88.] Repealed by 95-21-072, filed 10/16/95, effective 11/16/95. Statutory Authority: RCW 18.79.110.

246-839-560 Resources, facilities, and services for approved nursing education programs. [Statutory Authority: RCW 18.88.080. 91-07-049 (Order 116B), recodified as § 246-839-560, filed 3/18/91, effective 4/18/91. Statutory Authority: RCW 18.88.080, 18.88.086, 18.88.110, 18.88.120, 18.88.140, 18.88.160, 18.88.190, 18.88.200, 18.88.220, 18.130.050 and 1988 c 211. 88-16-034 (Order PM 751), § 308-120-560, filed 7/28/88.] Repealed by 95-21-072, filed 10/16/95, effective 11/16/95. Statutory Authority: RCW 18.79.110.

246-839-565 Students in approved nursing education programs. [Statutory Authority: RCW 18.88.080. 91-23-077 (Order 214B), § 246-839-565, filed 11/19/91, effective 12/20/91; 91-07-067 (Order 152B), § 246-839-565, filed 3/20/91, effective 4/20/91; 91-07-049 (Order 116B), recodified as § 246-839-565, filed 3/18/91, effective 4/18/91. Statutory Authority: RCW 18.88.-080, 18.88.086, 18.88.110, 18.88.120, 18.88.140, 18.88.160, 18.88.190, 18.88.200, 18.88.220, 18.130.050 and 1988 c 211. 88-16-034 (Order PM 751), § 308-120-565, filed 7/28/88.] Repealed by 95-21-072, filed 10/16/95, effective 11/16/95. Statutory Authority: RCW 18.79.110.

246-839-570 Faculty in approved nursing education programs. [Statutory Authority: RCW 18.88.080. 91-07-049 (Order 116B), recodified as § 246-839-570, filed 3/18/91, effective 4/18/91. Statutory Authority: RCW 18.88.080, 18.88.086, 18.88.110, 18.88.120, 18.88.140, 18.88.160, 18.88.190, 18.88.200, 18.88.220, 18.130.050 and 1988 c 211. 88-16-034 (Order PM 751), § 308-120-570, filed 7/28/88.] Repealed by 95-21-072, filed

10/16/95, effective 11/16/95. Statutory Authority: RCW 18.79.110.

246-839-575 Curriculum for approved nursing education programs. [Statutory Authority: RCW 18.88.080. 91-07-049 (Order 116B), recodified as § 246-839-575, filed 3/18/91, effective 4/18/91. Statutory Authority: RCW 18.88.080, 18.88.086, 18.88.110, 18.88.120, 18.88.140, 18.88.160, 18.88.190, 18.88.200, 18.88.220, 18.130.050 and 1988 c 211. 88-16-034 (Order PM 751), § 308-120-575, filed 7/28/88.] Repealed by 95-21-072, filed 10/16/95, effective 11/16/95. Statutory Authority: RCW 18.79.110.

246-839-700 Standards of nursing conduct or practice. [Statutory Authority: RCW 18.88.080 and 18.130.050. 91-23-077 (Order 214B), § 246-839-700, filed 11/19/91, effective 12/20/91; 91-07-049 (Order 116B), recodified as § 246-839-700, filed 3/18/91, effective 4/18/91. Statutory Authority: RCW 18.88.080, 18.88.086, 18.130.050, 18.130.070 and 18.130.180. 87-23-050 (Order PM 691), § 308-120-700, filed 11/18/87.] Repealed by 97-13-100, filed 6/18/97, effective 7/19/97. Statutory Authority: Chapter 18.79 RCW.

246-839-710 Violations of standards of nursing conduct or practice. [Statutory Authority: RCW 18.88.080 and 18.130.050. 91-23-077 (Order 214B), § 246-839-710, filed 11/19/91, effective 12/20/91; 91-07-049 (Order 116B), recodified as § 246-839-710, filed 3/18/91, effective 4/18/91. Statutory Authority: RCW 18.88.080, 18.88.-086, 18.130.050, 18.130.070 and 18.130.180. 87-23-050 (Order PM 691), § 308-120-710, filed 11/18/87.] Repealed by 97-13-100, filed 6/18/97, effective 7/19/97. Statutory Authority: Chapter 18.79 RCW.

246-839-720 Mitigating circumstances. [Statutory Authority: RCW 18.88.080 and 18.130.050. 91-07-049 (Order 116B), recodified as § 246-839-720, filed 3/18/91, effective 4/18/91. Statutory Authority: RCW 18.88.080, 18.88.-086, 18.130.050, 18.130.070 and 18.130.180. 87-23-050 (Order PM 691), § 308-120-720, filed 11/18/87.] Repealed by 97-13-100, filed 6/18/97, effective 7/19/97. Statutory Authority: Chapter 18.79 RCW.

246-839-730 Mandatory reporting defined. [Statutory Authority: RCW 18.88.080, 18.130.050 and 18.130.070. 91-23-077 (Order 214B), § 246-839-730, filed 11/19/91, effective 12/20/91. Statutory Authority: RCW 18.88.080 and 18.130.050. 91-07-049 (Order 116B), recodified as § 246-839-730, filed 3/18/91, effective 4/18/91. Statutory Authority: RCW 18.88.080, 18.88.086, 18.130.050, 18.130.070 and 18.130.180. 87-23-050 (Order PM 691), § 308-120-730, filed 11/18/87.] Repealed by 97-13-100, filed 6/18/97, effective 7/19/97. Statutory Authority: Chapter 18.79 RCW.

246-839-740 Violations considered for disciplinary purposes only. [Statutory Authority: RCW 18.88.080 and 18.130.050. 91-23-077 (Order 214B), § 246-839-740, filed 11/19/91, effective 12/20/91; 91-07-049 (Order 116B), recodified as § 246-839-740, filed 3/18/91, effective 4/18/91. Statutory Authority: RCW 18.88.080, 18.88.-086, 18.130.050, 18.130.070 and 18.130.180. 87-23-050 (Order PM 691), § 308-120-740, filed 11/18/87.] Repealed by 97-13-100, filed 6/18/97, effective 7/19/97. Statutory Authority: Chapter 18.79 RCW.

246-839-745 Adjudicative proceedings. [Statutory Authority: RCW 18.130.050. 93-20-113, § 246-839-745, filed 10/6/93, effective 11/6/93.] Repealed by 97-13-100, filed 6/18/97, effective 7/19/97. Statutory Authority: Chapter 18.79 RCW.

246-839-750 Philosophy governing voluntary substance abuse monitoring programs. [Statutory Authority: RCW 18.130.-050. 91-07-049 (Order 116B), recodified as § 246-839-750, filed 3/18/91, effective 4/18/91. Statutory Authority: RCW 18.88.080, 18.88.140, 18.130.175 and 70.24.270. 88-23-035 (Order PM 795), § 308-120-750, filed 11/9/88.] Repealed by 97-13-100, filed 6/18/97, effective 7/19/97. Statutory Authority: Chapter 18.79 RCW.

246-839-760 Terms used in WAC 246-839-750 through 246-839-780. [Statutory Authority: RCW 18.88.080 and 18.130.050. 91-23-077 (Order 214B), § 246-839-760, filed 11/19/91, effective 12/20/91. Statutory Authority: RCW 18.130.050. 91-07-049 (Order 116B), recodified as § 246-839-760, filed 3/18/91, effective 4/18/91. Statutory Authority: RCW 18.88.080, 18.88.140, 18.130.-175 and 70.24.270. 88-23-035 (Order PM 795), § 308-120-760, filed 11/9/88.] Repealed by 97-13-100, filed 6/18/97, effective 7/19/97. Statutory Authority: Chapter 18.79 RCW.

246-839-770 Approval of substance abuse monitoring programs. [Statutory Authority: RCW 18.130.050. 91-07-049 (Order 116B), recodified as § 246-839-770, filed 3/18/91, effective 4/18/91. Statutory Authority: RCW 18.88.080, 18.88.140, 18.130.175 and 70.24.270. 88-23-035 (Order PM 795), § 308-120-770, filed 11/9/88.] Repealed by 97-13-100, filed 6/18/97, effective 7/19/97. Statutory Authority: Chapter 18.79 RCW.

246-839-780 Participation in approved substance abuse monitoring program. [Statutory Authority: RCW 18.130.050. 91-07-049 (Order 116B), recodified as § 246-839-780, filed 3/18/91, effective 4/18/91. Statutory Authority: RCW 18.88.080, 18.88.140, 18.130.175 and 70.24.270. 88-23-035 (Order PM 795), § 308-120-780, filed 11/9/88.] Repealed by 97-13-100, filed 6/18/97, effective 7/19/97. Statutory Authority: Chapter 18.79 RCW.

246-839-800 Scope of practice—Advisory opinions. [Statutory Authority: RCW 18.88.080. 91-07-049 (Order 116B), recodified as § 246-839-800, filed 3/18/91, effective 4/18/91; 85-17-031 (Order PL 548), § 308-120-800, filed 8/14/85.] Repealed by 97-13-100, filed 6/18/97, effective 7/19/97. Statutory Authority: Chapter 18.79 RCW.

246-839-810 Provision for continuity of drug therapy for residents. [Statutory Authority: RCW 18.88.080. 91-07-049 (Order 116B), recodified as § 246-839-810, filed 3/18/91, effective 4/18/91; 83-12-026 (Order PL 436), § 308-120-270, filed 5/25/83.] Repealed by 97-13-100, filed 6/18/97, effective 7/19/97. Statutory Authority: Chapter 18.79 RCW.

246-839-820 Provision for clean, intermittent catheterization in schools. [Statutory Authority: RCW 18.88.080. 92-01-023 (Order 222B), § 246-839-820, filed 12/6/91, effective 1/6/92; 91-07-049 (Order 116B), recodified as § 246-839-820, filed 3/18/91, effective 4/18/91; 90-04-059, § 308-120-620, filed 2/2/90, effective 3/5/90.] Repealed by 97-13-100, filed 6/18/97, effective 7/19/97. Statutory Authority: Chapter 18.79 RCW.

246-839-830 Determination and pronouncement of death. [Statutory Authority: RCW 18.88.080. 91-23-077 (Order 214B), § 246-839-830, filed 11/19/91, effective 12/20/91; 91-07-049 (Order 116B), recodified as § 246-839-830, filed 3/18/91, effective 4/18/91. Statutory Authority: RCW 18.88.080, [18.88].086, [18.88].110, [18.88].130, [18.88].140, [18.88].175, [18.88].280 and 18.130.050. 89-12-033 (Order PM 847), § 308-120-810, filed 6/1/89.] Repealed by 97-13-100, filed 6/18/97, effective 7/19/97. Statutory Authority: Chapter 18.79 RCW.

246-839-840 Nursing technician. [Statutory Authority: RCW 18.88.080. 91-23-077 (Order 214B), § 246-839-840, filed 11/19/91, effective 12/20/91; 91-07-067 (Order 152B), § 246-839-840, filed 3/20/91, effective 4/20/91.] Repealed by 97-13-100, filed 6/18/97, effective 7/19/97. Statutory Authority: Chapter 18.79 RCW.

246-839-850 Use of nomenclature. [Statutory Authority: RCW 18.88.080. 91-23-077 (Order 214B), § 246-839-850, filed 11/19/91, effective 12/20/91; 91-07-067 (Order 152B), § 246-839-850, filed 3/20/91, effective 4/20/91.] Repealed by 97-13-100, filed 6/18/97, effective 7/19/97. Statutory Authority: Chapter 18.79 RCW.

246-839-860 Nursing technician criteria. [Statutory Authority: RCW 18.88.080. 91-07-067 (Order 152B), § 246-839-860, filed 3/20/91, effective 4/20/91.] Repealed by 97-17-049, filed 8/15/97, effective 9/15/97. Statutory Authority: RCW 18.79.160.

246-839-870 Functions of the nursing technician. [Statutory Authority: RCW 18.88.080. 91-07-067 (Order 152B), § 246-839-870, filed 3/20/91, effective 4/20/91.] Repealed by 97-13-100, filed 6/18/97, effective 7/19/97. Statutory Authority: Chapter 18.79 RCW.

246-839-880 Functions of the registered nurse supervising the nursing technician. [Statutory Authority: RCW 18.88.080. 91-07-067 (Order 152B), § 246-839-880, filed 3/20/91, effective 4/20/91.] Repealed by 97-13-100, filed 6/18/97, effective 7/19/97. Statutory Authority: Chapter 18.79 RCW.

246-839-890 Responsibilities of the employing facility. [Statutory Authority: RCW 18.88.080. 91-23-077 (Order 214B), § 246-839-890, filed 11/19/91, effective 12/20/91; 91-07-067 (Order 152B), § 246-839-890, filed 3/20/91, effective 4/20/91.] Repealed by 97-13-100, filed 6/18/97,

effective 7/19/97. Statutory Authority: Chapter 18.79 RCW.

246-839-900 Responsibilities of the nurse administrator. [Statutory Authority: RCW 18.88.080. 91-07-067 (Order 152B), § 246-839-900, filed 3/20/91, effective 4/20/91.] Repealed by 97-13-100, filed 6/18/97, effective 7/19/97. Statutory Authority: Chapter 18.79 RCW.

246-839-990 Registered nurse fees. [Statutory Authority: RCW 18.88.080. 93-12-125 (Order 366), § 246-839-990, filed 6/2/93, effective 7/3/93. Statutory Authority: RCW 43.70.040. 91-07-048 (Order 132), recodified as § 246-839-990, filed 3/18/91, effective 4/18/91. Statutory Authority: RCW 43.70.250. 90-04-094 (Order 029), § 308-120-275, filed 2/7/90, effective 3/10/90. Statutory Authority: RCW 43.24.086. 88-20-075 (Order 783), § 308-120-275, filed 10/5/88; 87-10-028 (Order PM 650), § 308-120-275, filed 5/1/87. Statutory Authority: 1983 c 168 § 12. 83-17-031 (Order PL 442), § 308-120-275, filed 8/10/83. Formerly WAC 308-120-260.] Repealed by 95-12-021, filed 5/31/95, effective 7/1/95. Statutory Authority: RCW 18.79.200.

Chapter 246-857
PHARMACISTS—PRACTICE AND PROCEDURE

246-857-020 Practice and procedure—Adoption by reference. [Statutory Authority: RCW 18.64.005 and 34.05.220. 92-12-035 (Order 277B), § 246-857-020, filed 5/28/92, effective 6/28/92. Statutory Authority: RCW 18.64.005 and chapter 18.64A RCW. 91-18-057 (Order 191B), recodified as § 246-857-020, filed 8/30/91, effective 9/30/91. Statutory Authority: RCW 18.64.005. 88-06-026 (Order 210), § 360-08-005, filed 2/25/88.] Repealed by 93-04-017 (Order 330B), filed 1/25/93, effective 2/25/93. Statutory Authority: RCW 18.64.005.

246-857-030 Appearance and practice before board—Who may appear. [Statutory Authority: RCW 18.64.005 and chapter 18.64A RCW. 91-18-057 (Order 191B), recodified as § 246-857-030, filed 8/30/91, effective 9/30/91; Regulation .08.010, filed 1/10/63; Regulation .08.010, filed 3/23/60.] Repealed by 93-04-017 (Order 330B), filed 1/25/93, effective 2/25/93. Statutory Authority: RCW 18.64.005.

246-857-040 Appearance and practice before board—Standards of ethical conduct. [Statutory Authority: RCW 18.64.005 and chapter 18.64A RCW. 91-18-057 (Order 191B), recodified as § 246-857-040, filed 8/30/91, effective 9/30/91; Regulation .08.030, filed 1/10/63; Regulation .08.040, filed 3/23/60.] Repealed by 93-04-017 (Order 330B), filed 1/25/93, effective 2/25/93. Statutory Authority: RCW 18.64.005.

246-857-050 Appearance and practice before board—Appearance by former employee of board or former member of attorney general's staff. [Statutory Authority: RCW 18.64.005 and chapter 18.64A RCW. 91-18-057 (Order 191B), recodified as § 246-857-050, filed 8/30/91, effective 9/30/91; Regulation .08.040, filed 1/10/63; Regulation .08.050, filed 3/23/60.] Repealed by 93-04-017 (Order 330B), filed 1/25/93, effective 2/25/93. Statutory Authority: RCW 18.64.005.

246-857-060 Appearance and practice before board—Former employee as expert witness. [Statutory Authority: RCW 18.64.005 and chapter 18.64A RCW. 91-18-057 (Order 191B), recodified as § 246-857-060, filed 8/30/91, effective 9/30/91; Regulation .08.050, filed 1/10/63; Regulation .08.060, filed 3/23/60.] Repealed by 93-04-017 (Order 330B), filed 1/25/93, effective 2/25/93. Statutory Authority: RCW 18.64.005.

246-857-070 Depositions and interrogatories in contested cases—Right to take. [Statutory Authority: RCW 18.64.005 and chapter 18.64A RCW. 91-18-057 (Order 191B), recodified as § 246-857-070, filed 8/30/91, effective 9/30/91; Regulation .08.230, filed 1/10/63; Regulation .08.230, filed 3/23/60.] Repealed by 93-04-017 (Order 330B), filed 1/25/93, effective 2/25/93. Statutory Authority: RCW 18.64.005.

246-857-080 Depositions and interrogatories in contested cases—Scope. [Statutory Authority: RCW 18.64.005 and chapter 18.64A RCW. 91-18-057 (Order 191B), recodified as § 246-857-080, filed 8/30/91, effective 9/30/91; Regulation .08.240, filed 1/10/63; Regulation .08.240, filed 3/23/60.] Repealed by 93-04-017 (Order 330B), filed 1/25/93, effective 2/25/93. Statutory Authority: RCW 18.64.005.

246-857-090 Depositions and interrogatories in contested cases—Officer before whom taken. [Statutory Authority: RCW 18.64.005 and chapter 18.64A RCW. 91-18-057 (Order 191B), recodified as § 246-857-090, filed 8/30/91, effective 9/30/91; Regulation .08.250, filed 1/10/63; Regulation .08.250, filed 3/23/60.] Repealed by 93-04-017 (Order 330B), filed 1/25/93, effective 2/25/93. Statutory Authority: RCW 18.64.005.

246-857-100 Depositions and interrogatories in contested cases—Authorization. [Statutory Authority: RCW 18.64.005 and chapter 18.64A RCW. 91-18-057 (Order 191B), recodified as § 246-857-100, filed 8/30/91, effective 9/30/91; Regulation .08.260, filed 1/10/63; Regulation .08.260, filed 3/23/60.] Repealed by 93-04-017 (Order 330B), filed 1/25/93, effective 2/25/93. Statutory Authority: RCW 18.64.005.

246-857-110 Depositions and interrogatories in contested cases—Protection of parties and deponents. [Statutory Authority: RCW 18.64.005 and chapter 18.64A RCW. 91-18-057 (Order 191B), recodified as § 246-857-110, filed 8/30/91, effective 9/30/91; Regulation .08.270, filed 1/10/63; Regulation .08.270, filed 3/23/60.] Repealed by 93-04-017 (Order 330B), filed 1/25/93, effective 2/25/93. Statutory Authority: RCW 18.64.005.

246-857-120 Depositions and interrogatories in contested cases—Oral examination and cross-examination. [Statutory Authority: RCW 18.64.005 and chapter 18.64A RCW. 91-18-057 (Order 191B), recodified as § 246-857-120, filed 8/30/91, effective 9/30/91; Regulation .08.280, filed 1/10/63; Regulation .08.280, filed 3/23/60.] Repealed by 93-04-017 (Order 330B), filed 1/25/93, effective 2/25/93. Statutory Authority: RCW 18.64.-005.

246-857-130 Depositions and interrogatories in contested cases—Recordation. [Statutory Authority: RCW 18.64.005 and chapter 18.64A RCW. 91-18-057 (Order 191B), recodified as § 246-857-130, filed 8/30/91, effective 9/30/91; Regulation .08.290, filed 1/10/63; Regulation .08.290, filed 3/23/60.] Repealed by 93-04-017 (Order 330B), filed 1/25/93, effective 2/25/93. Statutory Authority: RCW 18.64.005.

246-857-140 Depositions and interrogatories in contested cases—Signing attestation and return. [Statutory Authority: RCW 18.64.005 and chapter 18.64A RCW. 91-18-057 (Order 191B), recodified as § 246-857-140, filed 8/30/91, effective 9/30/91; Regulation .08.300, filed 1/10/63; Regulation .08.300, filed 3/23/60.] Repealed by 93-04-017 (Order 330B), filed 1/25/93, effective 2/25/93. Statutory Authority: RCW 18.64.005.

246-857-150 Depositions and interrogatories in contested cases—Use and effect. [Statutory Authority: RCW 18.64.005 and chapter 18.64A RCW. 91-18-057 (Order 191B), recodified as § 246-857-150, filed 8/30/91, effective 9/30/91; Regulation .08.310, filed 1/10/63; Regulation .08.310, filed 3/23/60.] Repealed by 93-04-017 (Order 330B), filed 1/25/93, effective 2/25/93. Statutory Authority: RCW 18.64.005.

246-857-160 Depositions and interrogatories in contested cases—Fees of officers and deponents. [Statutory Authority: RCW 18.64.005 and chapter 18.64A RCW. 91-18-057 (Order 191B), recodified as § 246-857-160, filed 8/30/91, effective 9/30/91; Regulation .08.320, filed 1/10/63; Regulation .08.320, filed 3/23/60.] Repealed by 93-04-017 (Order 330B), filed 1/25/93, effective 2/25/93. Statutory Authority: RCW 18.64.005.

246-857-170 Depositions upon interrogatories—Submission of interrogatories. [Statutory Authority: RCW 18.64.005 and chapter 18.64A RCW. 91-18-057 (Order 191B), recodified as § 246-857-170, filed 8/30/91, effective 9/30/91; Regulation .08.330, filed 1/10/63; Regulation .08.330, filed 3/23/60.] Repealed by 93-04-017 (Order 330B), filed 1/25/93, effective 2/25/93. Statutory Authority: RCW 18.64.005.

246-857-180 Depositions upon interrogatories—Interrogation. [Statutory Authority: RCW 18.64.005 and 34.05.220. 92-12-035 (Order 277B), § 246-857-180, filed 5/28/92, effective 6/28/92. Statutory Authority: RCW 18.64.005 and chapter 18.64A RCW. 91-18-057 (Order 191B), recodified as § 246-857-180, filed 8/30/91, effective 9/30/91; Regulation .08.340, filed 1/10/63; Regulation .08.340, filed 3/23/60.] Repealed by 93-04-017 (Order 330B), filed 1/25/93, effective 2/25/93. Statutory Authority: RCW 18.64.005.

246-857-190 Depositions upon interrogatories—Attestation and return. [Statutory Authority: RCW 18.64.005 and chapter 18.64A RCW. 91-18-057 (Order 191B), recodified as § 246-857-190, filed 8/30/91, effective 9/30/91; Regulation .08.350, filed 1/10/63; Regulation .08.350, filed 3/23/60.] Repealed by 93-04-017 (Order 330B), filed 1/25/93, effective 2/25/93. Statutory Authority: RCW 18.64.005.

246-857-200 Depositions upon interrogatories—Provisions of deposition rule. [Statutory Authority: RCW 18.64.005 and chapter 18.64A RCW. 91-18-057 (Order 191B), recodified as § 246-857-200, filed 8/30/91, effective 9/30/91; Regulation .08.360, filed 1/10/63; Regulation .08.360, filed 3/23/60.] Repealed by 93-04-017 (Order 330B), filed 1/25/93, effective 2/25/93. Statutory Authority: RCW 18.64.005.

246-857-210 Official notice—Matters of law. [Statutory Authority: RCW 18.64.005 and chapter 18.64A RCW. 91-18-057 (Order 191B), recodified as § 246-857-210, filed 8/30/91, effective 9/30/91; Regulation .08.370, filed 1/10/63; Regulation .08.370, filed 3/23/60.] Repealed by 93-04-017 (Order 330B), filed 1/25/93, effective 2/25/93. Statutory Authority: RCW 18.64.005.

246-857-220 Official notice—Material facts. [Statutory Authority: RCW 18.64.005 and chapter 18.64A RCW. 91-18-057 (Order 191B), recodified as § 246-857-220, filed 8/30/91, effective 9/30/91; Regulation .08.380, filed 1/10/63; Regulation .08.380, filed 3/23/60.] Repealed by 93-04-017 (Order 330B), filed 1/25/93, effective 2/25/93. Statutory Authority: RCW 18.64.005.

246-857-230 Presumptions. [Statutory Authority: RCW 18.64.005 and chapter 18.64A RCW. 91-18-057 (Order 191B), recodified as § 246-857-230, filed 8/30/91, effective 9/30/91; Regulation .08.390, filed 1/10/63; Regulation .08.390, filed 3/23/60.] Repealed by 93-04-017 (Order 330B), filed 1/25/93, effective 2/25/93. Statutory Authority: RCW 18.64.005.

246-857-240 Stipulations and admissions of record. [Statutory Authority: RCW 18.64.005 and chapter 18.64A RCW. 91-18-057 (Order 191B), recodified as § 246-857-240, filed 8/30/91, effective 9/30/91; Regulation .08.400, filed 1/10/63; Regulation .08.400, filed 3/23/60.] Repealed by 93-04-017 (Order 330B), filed 1/25/93, effective 2/25/93. Statutory Authority: RCW 18.64.-005.

246-857-250 Definition of issues before hearing. [Statutory Authority: RCW 18.64.005 and chapter 18.64A RCW. 91-18-057 (Order 191B), recodified as § 246-857-250, filed 8/30/91, effective 9/30/91; Regulation .08.420, filed 1/10/63; Regulation .08.420, filed 3/23/60.] Repealed by 93-04-017 (Order 330B), filed 1/25/93, effective 2/25/93. Statutory Authority: RCW 18.64.005.

246-857-260 Rules of evidence—Admissibility criteria. [Statutory Authority: RCW 18.64.005 and chapter 18.64A RCW. 91-18-057 (Order 191B), recodified as § 246-857-260, filed 8/30/91, effective 9/30/91; Regulation .08.520, filed 1/10/63; Regulation .08.520, filed 3/23/60.] Repealed by 93-04-017 (Order 330B), filed 1/25/93, effective 2/25/93. Statutory Authority: RCW 18.64.-005.

246-857-270 Rules of evidence—Tentative admission—Exclusion—Discontinuance—Objections. [Statutory Authority: RCW 18.64.005 and chapter 18.64A RCW. 91-18-057 (Order 191B), recodified as § 246-857-270, filed 8/30/91, effective 9/30/91; Regulation .08.530, filed 1/10/63; Regulation .08.530, filed 3/23/60.] Repealed by 93-04-017 (Order 330B), filed 1/25/93, effective 2/25/93. Statutory Authority: RCW 18.64.005.

246-857-280 Petitions for rule making, amendment or repeal—Who may petition. [Statutory Authority: RCW 18.64.005 and chapter 18.64A RCW. 91-18-057 (Order 191B), recodified as § 246-857-280, filed 8/30/91, effective 9/30/91; Regulation .08.540, filed 1/10/63; Regulation .08.540, filed 3/23/60.] Repealed by 93-04-017 (Order 330B), filed 1/25/93, effective 2/25/93. Statutory Authority: RCW 18.64.005.

246-857-290 Petitions for rule making, amendment or repeal—Requisites. [Statutory Authority: RCW 18.64.005 and chapter 18.64A RCW. 91-18-057 (Order 191B), recodified as § 246-857-290, filed 8/30/91, effective 9/30/91; Regulation .08.550, filed 1/10/63; Regulation .08.550, filed 3/23/60.] Repealed by 93-04-017 (Order 330B), filed 1/25/93, effective 2/25/93. Statutory Authority: RCW 18.64.005.

246-857-300 Petitions for rule making, amendment or repeal—Agency must consider. [Statutory Authority: RCW 18.64.005 and chapter 18.64A RCW. 91-18-057 (Order 191B), recodified as § 246-857-300, filed 8/30/91, effective 9/30/91; Regulation .08.560, filed 1/10/63; Regulation .08.560, filed 3/23/60.] Repealed by 93-04-017 (Order 330B), filed 1/25/93, effective 2/25/93. Statutory Authority: RCW 18.64.005.

246-857-310 Petitions for rule making, amendment or repeal—Notice of disposition.[Statutory Authority: RCW 18.64.005 and chapter 18.64A RCW. 91-18-057 (Order 191B), recodified as § 246-857-310, filed 8/30/91, effective 9/30/91; Regulation .08.570, filed 1/10/63; Regulation .08.570, filed 3/23/60.] Repealed by 93-04-017 (Order 330B), filed 1/25/93, effective 2/25/93. Statutory Authority: RCW 18.64.005.

246-857-320 Declaratory rulings. [Statutory Authority: RCW 18.64.005 and 34.05.220. 92-12-035 (Order 277B), § 246-857-320, filed 5/28/92, effective 6/28/92. Statutory Authority: RCW 18.64.005 and chapter 18.64A RCW. 91-18-057 (Order 191B), recodified as § 246-857-320, filed 8/30/91, effective 9/30/91; Regulation .08.580, filed 1/10/63; Regulation .08.580, filed 3/23/60.] Repealed by 93-04-017 (Order 330B), filed 1/25/93, effective 2/25/93. Statutory Authority: RCW 18.64.-005.

246-857-330 Forms. [Statutory Authority: RCW 18.64.005 and 34.05.220. 92-12-035 (Order 277B), § 246-857-330, filed 5/28/92, effective 6/28/92. Statutory Authority: RCW 18.64.005 and chapter 18.64A RCW. 91-18-057 (Order 191B), recodified as § 246-857-330, filed 8/30/91, effective 9/30/91; Regulation .08.590, filed 1/10/63; Regulation .08.590, filed 3/23/60.] Repealed by 93-04-017 (Order 330B), filed 1/25/93, effective 2/25/93. Statutory Authority: RCW 18.64.005.

246-857-340 SEPA exemption. [Statutory Authority: Chapter 43.21C RCW. 92-12-035 (Order 277B), § 246-857-340, filed 5/28/92, effective 6/28/92. Statutory Authority: RCW 18.64.005 and chapter 18.64A RCW. 91-18-057 (Order 191B), recodified as § 246-857-340, filed 8/30/91, effective 9/30/91; Order 128, § 360-45-010, filed 5/19/76.] Repealed by 93-04-017 (Order 330B), filed 1/25/93, effective 2/25/93. Statutory Authority: RCW 18.64.005.

Chapter 246-893
PHARMACY—PUBLIC RECORDS ACCESS PURSUANT TO INITIATIVE 276

246-893-001 Purpose. [Statutory Authority: RCW 18.64.005 and chapter 18.64A RCW. 91-18-057 (Order 191B), recodified as § 246-893-001, filed 8/30/91, effective 9/30/91. Statutory Authority: RCW 42.17.250. 89-09-020 (Order 224), § 360-44-010, filed 4/12/89; Order 113, § 360-44-010, filed 4/27/73.] Repealed by 97-20-167, filed 10/1/97, effective 11/1/97. Statutory Authority: RCW 18.64.005.

246-893-010 Definitions. [Statutory Authority: RCW 18.64.005 and chapter 18.64A RCW. 91-18-057 (Order 191B), recodified as § 246-893-010, filed 8/30/91, effective 9/30/91. Statutory Authority: RCW 18.64.005, 18.81.080 and 42.17.290. 83-01-083 (Order 171), § 360-44-020, filed 12/17/82; Order 113, § 360-44-020, filed 4/27/73.] Repealed by 97-20-167, filed 10/1/97, effective 11/1/97. Statutory Authority: RCW 18.64.005.

246-893-020 Description of central and field organization of the board. [Statutory Authority: RCW 42.17.250. 92-12-035 (Order 277B), § 246-893-020, filed 5/28/92, effective 6/28/92. Statutory Authority: RCW 18.64.005 and chapter 18.64A RCW. 91-18-057 (Order 191B), recodified as § 246-893-020, filed 8/30/91, effective 9/30/91; Order 113, § 360-44-030, filed 4/27/73.] Repealed by 97-20-167, filed 10/1/97, effective 11/1/97. Statutory Authority: RCW 18.64.005.

246-893-030 Operations and procedures. [Statutory Authority: RCW 42.17.250. 92-12-035 (Order 277B), § 246-893-030, filed 5/28/92, effective 6/28/92. Statutory Authority: RCW 18.64.005 and chapter 18.64A RCW. 91-18-057 (Order 191B), recodified as § 246-893-030, filed 8/30/91, effective 9/30/91. Statutory Authority: RCW 42.17.250. 89-09-020 (Order 224), § 360-44-040, filed 4/12/89. Statutory Authority: RCW 18.64.005, 18.81.080 and 42.17.290. 83-01-083 (Order 171), § 360-44-040, filed 12/17/82; Order 113, § 360-44-040, filed 4/27/73.] Repealed by 97-20-167, filed 10/1/97,

effective 11/1/97. Statutory Authority: RCW 18.64.-005.

246-893-040 Public records available. [Statutory Authority: RCW 42.17.250. 92-12-035 (Order 277B), § 246-893-040, filed 5/28/92, effective 6/28/92. Statutory Authority: RCW 18.64.005 and chapter 18.64A RCW. 91-18-057 (Order 191B), recodified as § 246-893-040, filed 8/30/91, effective 9/30/91. Statutory Authority: RCW 42.17.250. 89-09-020 (Order 224), § 360-44-050, filed 4/12/89; Order 113, § 360-44-050, filed 4/27/73.] Repealed by 97-20-167, filed 10/1/97, effective 11/1/97. Statutory Authority: RCW 18.64.005.

246-893-050 Public records officer. [Statutory Authority: RCW 18.64.005 and chapter 18.64A RCW. 91-18-057 (Order 191B), recodified as § 246-893-050, filed 8/30/91, effective 9/30/91. Statutory Authority: RCW 42.17.-250. 89-09-020 (Order 224), § 360-44-060, filed 4/12/89; Order 113, § 360-44-060, filed 4/27/73.] Repealed by 97-20-167, filed 10/1/97, effective 11/1/97. Statutory Authority: RCW 18.64.005.

246-893-060 Office hours. [Statutory Authority: RCW 18.64.005 and chapter 18.64A RCW. 91-18-057 (Order 191B), recodified as § 246-893-060, filed 8/30/91, effective 9/30/91; Order 113, § 360-44-070, filed 4/27/73.] Repealed by 97-20-167, filed 10/1/97, effective 11/1/97. Statutory Authority: RCW 18.64.005.

246-893-070 Requests for public records. [Statutory Authority: RCW 18.64.005 and chapter 18.64A RCW. 91-18-057 (Order 191B), recodified as § 246-893-070, filed 8/30/91, effective 9/30/91. Statutory Authority: RCW 42.17.-250. 89-09-020 (Order 224), § 360-44-080, filed 4/12/89; Order 113, § 360-44-080, filed 4/27/73.] Repealed by 97-20-167, filed 10/1/97, effective 11/1/97. Statutory Authority: RCW 18.64.005.

246-893-080 Copying. [Statutory Authority: RCW 18.64.005 and chapter 18.64A RCW. 91-18-057 (Order 191B), recodified as § 246-893-080, filed 8/30/91, effective 9/30/91. Statutory Authority: RCW 42.17.250. 89-09-020 (Order 224), § 360-44-090, filed 4/12/89; Order 113, § 360-44-090, filed 4/27/73.] Repealed by 97-20-167, filed 10/1/97, effective 11/1/97. Statutory Authority: RCW 18.64.005.

246-893-090 Exemptions. [Statutory Authority: RCW 42.17.250. 92-12-035 (Order 277B), § 246-893-090, filed 5/28/92, effective 6/28/92. Statutory Authority: RCW 18.64.005 and chapter 18.64A RCW. 91-18-057 (Order 191B), recodified as § 246-893-090, filed 8/30/91, effective 9/30/91. Statutory Authority: RCW 42.17.250. 89-09-020 (Order 224), § 360-44-100, filed 4/12/89; Order 113, § 360-44-100, filed 4/27/73.] Repealed by 97-20-167, filed 10/1/97, effective 11/1/97. Statutory Authority: RCW 18.64.005.

246-893-100 Review of denials of public records requests. [Statutory Authority: RCW 18.64.005 and chapter 18.64A RCW. 91-18-057 (Order 191B), recodified as § 246-893-100, filed 8/30/91, effective 9/30/91; Order 113, § 360-44-110, filed 4/27/73.] Repealed by 97-20-167, filed 10/1/97, effective 11/1/97. Statutory Authority: RCW 18.64.005.

246-893-110 Protection of public records. [Statutory Authority: RCW 18.64.005 and chapter 18.64A RCW. 91-18-057 (Order 191B), recodified as § 246-893-110, filed 8/30/91, effective 9/30/91; Order 113, § 360-44-120, filed 4/27/73.] Repealed by 97-20-167, filed 10/1/97, effective 11/1/97. Statutory Authority: RCW 18.64.-005.

246-893-120 Index of public records available. [Statutory Authority: RCW 42.17.250. 92-12-035 (Order 277B), § 246-893-120, filed 5/28/92, effective 6/28/92. Statutory Authority: RCW 18.64.005 and chapter 18.64A RCW. 91-18-057 (Order 191B), recodified as § 246-893-120, filed 8/30/91, effective 9/30/91. Statutory Authority: RCW 42.17.250. 89-09-020 (Order 224), § 360-44-130, filed 4/12/89; Order 113, § 360-44-130, filed 4/27/73.] Repealed by 97-20-167, filed 10/1/97, effective 11/1/97. Statutory Authority: RCW 18.64.005.

246-893-130 Address where requests to be directed. [Statutory Authority: RCW 42.17.250. 92-12-035 (Order 277B), § 246-893-130, filed 5/28/92, effective 6/28/92. Statutory Authority: RCW 18.64.005 and chapter 18.64A RCW. 91-18-057 (Order 191B), recodified as § 246-893-130, filed 8/30/91, effective 9/30/91. Statutory Authority: RCW 42.17.250. 89-09-020 (Order 224), § 360-44-140, filed 4/12/89; Order 113, § 360-44-140, filed 4/27/73.] Repealed by 97-20-167, filed 10/1/97, effective 11/1/97. Statutory Authority: RCW 18.64.005.

246-893-140 Adoption of form. [Statutory Authority: RCW 18.64.-005 and chapter 18.64A RCW. 91-18-057 (Order 191B), recodified as § 246-893-140, filed 8/30/91, effective 9/30/91; Order 113, § 360-44-150, filed 4/27/73.] Repealed by 97-20-167, filed 10/1/97, effective 11/1/97. Statutory Authority: RCW 18.64.005.

246-893-998 Appendix A—Form. [Statutory Authority: RCW 42.17.250. 92-12-035 (Order 277B), § 246-893-998, filed 5/28/92, effective 6/28/92. Statutory Authority: RCW 18.64.005 and chapter 18.64A RCW. 91-18-057 (Order 191B), recodified as § 246-893-998, filed 8/30/91, effective 9/30/91. Statutory Authority: RCW 42.17.250. 89-09-020 (Order 224), § 360-44-990, filed 4/12/89; Order 113, Appendix A (codified as WAC 360-44-990), filed 4/27/73.] Repealed by 97-20-167, filed 10/1/97, effective 11/1/97. Statutory Authority: RCW 18.64.005.

Chapter 246-917
PHYSICIANS AND SURGEONS—BOARD OF MEDICAL EXAMINERS

246-917-020 Board meetings. [Statutory Authority: RCW 18.71.017. 91-20-170 (Order 203B), § 246-917-020, filed 10/2/91, effective 11/2/91; 91-06-030 (Order 147B), recodified as § 246-917-020, filed 2/26/91, effective 3/29/91; Order PL 136, § 308-52-010, filed 11/16/72; Rules (part), filed 12/18/63.] Repealed by 96-03-073, filed 1/17/96, effective 2/17/96. Statutory Authority: RCW 18.71.017 and 18.71A.020.

246-917-025 Refunds. [Statutory Authority: RCW 18.71.017. 91-20-170 (Order 203B), § 246-917-025, filed 10/2/91, effective 11/2/91.] Repealed by 96-03-073, filed 1/17/96, effective 2/17/96. Statutory Authority: RCW 18.71.017 and 18.71A.020.

246-917-026 Application withdrawals. [Statutory Authority: RCW 18.71.017. 91-24-051 (Order 218B), § 246-917-026, filed 11/27/91, effective 12/28/91.] Repealed by 96-03-073, filed 1/17/96, effective 2/17/96. Statutory Authority: RCW 18.71.017 and 18.71A.020.

246-917-030 Approved United States and Canadian medical schools. [Statutory Authority: RCW 18.71.017. 91-06-030 (Order 147B), recodified as § 246-917-030, filed 2/26/91, effective 3/29/91; 81-03-079 (Order PL 369), § 308-52-120, filed 1/21/81; Order PL-278, § 308-52-120, filed 11/16/77.] Repealed by 96-03-073, filed 1/17/96, effective 2/17/96. Statutory Authority: RCW 18.71.017 and 18.71A.020.

246-917-040 Postgraduate medical training defined. [Statutory Authority: RCW 18.71.017. 91-06-030 (Order 147B), recodified as § 246-917-040, filed 2/26/91, effective 3/29/91; 89-12-053 (Order PM 849), § 308-52-255, filed 6/5/89; 85-11-048 (Order PL 530), § 308-52-255, filed 5/16/85; 84-19-021 (Order PL 481), § 308-52-255, filed 9/12/84; 84-15-068 (Order PL 473), § 308-52-255, filed 7/18/84; 81-03-079 (Order PL 369), § 308-52-255, filed 1/21/81.] Repealed by 96-03-073, filed 1/17/96, effective 2/17/96. Statutory Authority: RCW 18.71.017 and 18.71A.020.

246-917-050 Foreign medical graduates. [Statutory Authority: RCW 18.71.017. 91-06-030 (Order 147B), recodified as § 246-917-050, filed 2/26/91, effective 3/29/91; 81-03-079 (Order PL 369), § 308-52-040, filed 1/21/81; Order PL 240, § 308-52-040, filed 2/19/76; Order PL 183, § 308-52-040, filed 2/10/75; Order PL 136, § 308-52-040, filed 11/16/72; Rules (part), filed 12/18/63.] Repealed by 96-03-073, filed 1/17/96, effective 2/17/96. Statutory Authority: RCW 18.71.017 and 18.71A.020.

246-917-060 AIDS prevention and information education requirements. [Statutory Authority: RCW 18.71.017. 91-06-030 (Order 147B), recodified as § 246-917-060, filed 2/26/91, effective 3/29/91. Statutory Authority: RCW 70.24.270. 89-06-076 (Order PM 821), § 308-52-620, filed 3/1/89.] Repealed by 96-03-073, filed 1/17/96, effective 2/17/96. Statutory Authority: RCW 18.71.017 and 18.71A.020.

246-917-070 Credentialing of physicians and surgeons. [Statutory Authority: RCW 18.71.017. 91-20-170 (Order 203B), § 246-917-070, filed 10/2/91, effective 11/2/91; 91-06-030 (Order 147B), recodified as § 246-917-070, filed 2/26/91, effective 3/29/91. Statutory Authority: RCW 18.71.017 and 18.71A.020. 88-21-047 (Order PM 782), § 308-52-600, filed 10/13/88.] Repealed by 96-03-073,

filed 1/17/96, effective 2/17/96. Statutory Authority: RCW 18.71.017 and 18.71A.020.

246-917-080 Examinations. [Statutory Authority: RCW 18.71.017. 91-06-030 (Order 147B), recodified as § 246-917-080, filed 2/26/91, effective 3/29/91; Order PL 136, § 308-52-030, filed 11/16/72; Rules (part), filed 12/18/63.] Repealed by 96-03-073, filed 1/17/96, effective 2/17/96. Statutory Authority: RCW 18.71.017 and 18.71A.020.

246-917-090 Applications for examination. [Statutory Authority: RCW 18.71.017. 91-06-030 (Order 147B), recodified as § 246-917-090, filed 2/26/91, effective 3/29/91. Statutory Authority: RCW 18.71.017 and 18.72.070. 90-05-001 (Order 031), § 308-52-100, filed 2/8/90, effective 3/11/90. Statutory Authority: RCW 18.71.017. 84-15-068 (Order PL 473), § 308-52-100, filed 7/18/84; Order PL 136, § 308-52-100, filed 11/16/72; Rules (part), filed 1/12/65.] Repealed by 96-03-073, filed 1/17/96, effective 2/17/96. Statutory Authority: RCW 18.71.017 and 18.71A.020.

246-917-100 Examination scores. [Statutory Authority: RCW 18.71A.020, 18.71.017, 18.71.060 and 18.71.070. 94-15-064, § 246-917-100, filed 7/19/94, effective 8/19/94. Statutory Authority: RCW 18.71.060 and 18.71.070. 93-21-017, § 246-917-100, filed 10/11/93, effective 11/11/93. Statutory Authority: RCW 18.71.017. 91-06-038 (Order 148B), § 246-917-100, filed 2/28/91, effective 3/31/91; 91-06-030 (Order 147B), recodified as § 246-917-100, filed 2/26/91, effective 3/29/91. Statutory Authority: RCW 18.71.017 and 18.17.070 [18.71.070]. 90-18-009 (Order 083), § 308-52-260, filed 8/24/90, effective 9/24/90. Statutory Authority: RCW 18.71.017. 89-06-077 (Order PM 822), § 308-52-260, filed 3/1/89; 85-03-084 (Order PL 508), § 308-52-260, filed 1/18/85; 79-06-063 (Order PL 304), § 308-52-260, filed 5/23/79; 78-04-028 (Order PL 284, Resolution No. 78-139), § 308-52-260, filed 3/14/78; Order PL 240, § 308-52-260, filed 2/19/76.] Repealed by 96-03-073, filed 1/17/96, effective 2/17/96. Statutory Authority: RCW 18.71.017 and 18.71A.020.

246-917-110 FLEX examination standards. [Statutory Authority: RCW 18.71.060 and 18.71.070. 93-21-017, § 246-917-110, filed 10/11/93, effective 11/11/93. Statutory Authority: RCW 18.71.017. 91-06-030 (Order 147B), recodified as § 246-917-110, filed 2/26/91, effective 3/29/91; 89-12-053 (Order PM 849), § 308-52-265, filed 6/5/89.] Repealed by 96-03-073, filed 1/17/96, effective 2/17/96. Statutory Authority: RCW 18.71.017 and 18.71A.020.

246-917-120 Examinations accepted for reciprocity or waiver. [Statutory Authority: RCW 18.71A.020, 18.71.017, 18.71.-060 and 18.71.070. 94-15-064, § 246-917-120, filed 7/19/94, effective 8/19/94. Statutory Authority: RCW 18.71.060 and 18.71.070. 93-21-017, § 246-917-120, filed 10/11/93, effective 11/11/93. Statutory Authority: RCW 18.71.017. 91-06-030 (Order 147B), recodified as § 246-917-120, filed 2/26/91, effective 3/29/91; 86-03-056 (Order PL 577), § 308-52-270, filed 1/15/86; 85-03-084 (Order PL 508), § 308-52-270, filed 1/18/85; 78-04-028 (Order PL 284, Resolution No. 78-139), § 308-52-270, filed 3/14/78; Order PL 268, § 308-52-270, filed 5/11/77; Order PL 240, § 308-52-270, filed 2/19/76.] Repealed by 96-03-073, filed 1/17/96, effective 2/17/96. Statutory Authority: RCW 18.71.017 and 18.71A.020.

246-917-121 Special purpose examination. [Statutory Authority: RCW 18.130.250. 93-11-008 (Order 360B), § 246-917-121, filed 5/5/93, effective 6/5/93. Statutory Authority: RCW 18.71.017. 91-20-170 (Order 203B), § 246-917-121, filed 10/2/91, effective 11/2/91.] Repealed by 96-03-073, filed 1/17/96, effective 2/17/96. Statutory Authority: RCW 18.71.017 and 18.71A.020.

246-917-125 Temporary permits—Recognized jurisdictions. [Statutory Authority: RCW 18.71.017. 92-08-021 (Order 257B), § 246-917-125, filed 3/20/92, effective 4/20/92.] Repealed by 96-03-073, filed 1/17/96, effective 2/17/96. Statutory Authority: RCW 18.71.017 and 18.71A.020.

246-917-126 Temporary permits—Issuance and duration. [Statutory Authority: RCW 18.71.017. 92-08-021 (Order 257B), § 246-917-126, filed 3/20/92, effective 4/20/92.] Repealed by 96-03-073, filed 1/17/96, effective 2/17/96. Statutory Authority: RCW 18.71.017 and 18.71A.020.

246-917-130 License renewal. [Statutory Authority: RCW 18.71.-017. 91-20-170 (Order 203B), § 246-917-130, filed 10/2/91, effective 11/2/91; 91-06-030 (Order 147B), recodified as § 246-917-130, filed 2/26/91, effective 3/29/91; Order PL 242, § 308-52-320, filed 3/15/76.] Repealed by 96-03-073, filed 1/17/96, effective 2/17/96. Statutory Authority: RCW 18.71.017 and 18.71A.020.

246-917-135 License renewal form. [Statutory Authority: RCW 18.130.250. 93-01-078 (Order 321B), § 246-917-135, filed 12/14/92, effective 1/14/93.] Repealed by 96-03-073, filed 1/17/96, effective 2/17/96. Statutory Authority: RCW 18.71.017 and 18.71A.020.

246-917-140 Scope. [Statutory Authority: RCW 18.71.017. 91-06-030 (Order 147B), recodified as § 246-917-140, filed 2/26/91, effective 3/29/91; Order PL 247, § 308-52-400, filed 5/17/76.] Repealed by 96-03-073, filed 1/17/96, effective 2/17/96. Statutory Authority: RCW 18.71.017 and 18.71A.020.

246-917-150 General requirements. [Statutory Authority: RCW 18.71.017. 91-06-030 (Order 147B), recodified as § 246-917-150, filed 2/26/91, effective 3/29/91; 89-12-053 (Order PM 849), § 308-52-405, filed 6/5/89. Statutory Authority: RCW 18.71.080 and 18.71A.020. 85-23-043 (Order PL 565), § 308-52-405, filed 11/18/85. Statutory Authority: RCW 18.71.017. 79-06-063 (Order PL 304), § 308-52-405, filed 5/23/79; Order PL 247, § 308-52-405, filed 5/17/76.] Repealed by 96-03-073, filed 1/17/96, effective 2/17/96. Statutory Authority: RCW 18.71.017 and 18.71A.020.

246-917-160 CME requirements during cycle revision. [Statutory Authority: RCW 18.71.017. 91-06-030 (Order 147B), recodified as § 246-917-160, filed 2/26/91, effective 3/29/91. Statutory Authority: RCW 18.71.080 and 18.71A.020. 85-23-043 (Order PL 565), § 308-52-406, filed 11/18/85. Statutory Authority: RCW 18.71.080. 81-23-051 (Order PL 386), § 308-52-406, filed 11/18/81.] Repealed by 96-03-073, filed 1/17/96, effective 2/17/96. Statutory Authority: RCW 18.71.017 and 18.71A.020.

246-917-170 Categories of creditable continuing medical education activities. [Statutory Authority: RCW 18.71.017. 91-06-030 (Order 147B), recodified as § 246-917-170, filed 2/26/91, effective 3/29/91. Statutory Authority: RCW 18.71.080 and 18.71A.020. 85-23-043 (Order PL 565), § 308-52-410, filed 11/18/85; Order PL 247, § 308-52-410, filed 5/17/76.] Repealed by 96-03-073, filed 1/17/96, effective 2/17/96. Statutory Authority: RCW 18.71.017 and 18.71A.020.

246-917-180 Continuing medical education requirement. [Statutory Authority: RCW 18.71.017. 91-06-030 (Order 147B), recodified as § 246-917-180, filed 2/26/91, effective 3/29/91; 89-12-053 (Order PM 849), § 308-52-415, filed 6/5/89. Statutory Authority: RCW 18.71.080 and 18.71A.020. 85-23-043 (Order PL 565), § 308-52-415, filed 11/18/85; Order PL 247, § 308-52-415, filed 5/17/76.] Repealed by 96-03-073, filed 1/17/96, effective 2/17/96. Statutory Authority: RCW 18.71.017 and 18.71A.020.

246-917-190 Approval not required. [Statutory Authority: RCW 18.71.017. 91-06-030 (Order 147B), recodified as § 246-917-190, filed 2/26/91, effective 3/29/91; Order PL 247, § 308-52-420, filed 5/17/76.] Repealed by 96-03-073, filed 1/17/96, effective 2/17/96. Statutory Authority: RCW 18.71.017 and 18.71A.020.

246-917-200 Certification of compliance. [Statutory Authority: RCW 18.71.017. 91-06-030 (Order 147B), recodified as § 246-917-200, filed 2/26/91, effective 3/29/91; Order PL 247, § 308-52-425, filed 5/17/76.] Repealed by 96-03-073, filed 1/17/96, effective 2/17/96. Statutory Authority: RCW 18.71.017 and 18.71A.020.

246-917-210 Brief adjudicative proceedings—Denials based on failure to meet education, experience, or examination prerequisites for licensure. [Statutory Authority: Chapters 18.71 and 34.05 RCW. 91-18-036 (Order 192B), § 246-917-210, filed 8/29/91, effective 9/29/91.] Repealed by 96-03-073, filed 1/17/96, effective 2/17/96. Statutory Authority: RCW 18.71.017 and 18.71A.020.

246-917-220 Adjudicative proceedings. [Statutory Authority: RCW 18.71.060 and 18.71.070. 93-21-017, § 246-917-220, filed 10/11/93, effective 11/11/93.] Repealed by 96-03-073, filed 1/17/96, effective 2/17/96. Statutory Authority: RCW 18.71.017 and 18.71A.020.

246-917-300 Retired active physician license. [Statutory Authority: RCW 18.130.250. 93-01-078 (Order 321B), § 246-917-300, filed 12/14/92, effective 1/14/93.] Repealed by 96-03-073, filed 1/17/96, effective 2/17/96. Statutory Authority: RCW 18.71.017 and 18.71A.020.

246-917-990 Physician and surgeon fees. [Statutory Authority: RCW 43.70.250. 93-16-102, § 246-917-990, filed 8/4/93, effective 9/4/93; 92-08-062 (Order 258), § 246-917-990, filed 3/27/92, effective 4/27/92. Statutory Authority: RCW 43.70.040. 91-06-027 (Order 131), § 246-917-990, filed 2/26/91, effective 3/29/91.] Repealed by 96-03-073, filed 1/17/96, effective 2/17/96. Statutory Authority: RCW 18.71.017 and 18.71A.020.

Chapter 246-920
PHYSICIANS AND SURGEONS—MEDICAL DISCIPLINARY BOARD

246-920-020 Prescriptions—Schedule II stimulant drugs. [Statutory Authority: RCW 18.72.150. 91-02-012 (Order 105B), recodified as § 246-920-020, filed 12/21/90, effective 1/21/91. Statutory Authority: RCW 18.72.150(1). 79-02-044 (Order 296, Resolution No. 296), § 320-18-010, filed 1/29/79.] Repealed by 96-03-073, filed 1/17/96, effective 2/17/96. Statutory Authority: RCW 18.71.017 and 18.71A.020.

246-920-030 Cooperation with investigation. [Statutory Authority: RCW 18.72.150. 92-23-035 (Order 316B), § 246-920-030, filed 11/13/92, effective 12/14/92; 91-02-012 (Order 105B), recodified as § 246-920-030, filed 12/21/90, effective 1/21/91. Statutory Authority: RCW 18.130.050. 88-04-080 (Order PM 703), § 320-18-020, filed 2/3/88.] Repealed by 96-03-073, filed 1/17/96, effective 2/17/96. Statutory Authority: RCW 18.71.017 and 18.71A.020.

246-920-040 Use of drugs or autotransfusion to enhance athletic ability. [Statutory Authority: RCW 18.72.150. 91-02-012 (Order 105B), recodified as § 246-920-040, filed 12/21/90, effective 1/21/91. Statutory Authority: RCW 18.130.050(1). 88-14-112 (Order 744), § 320-18-030, filed 7/6/88.] Repealed by 96-03-073, filed 1/17/96, effective 2/17/96. Statutory Authority: RCW 18.71.017 and 18.71A.020.

246-920-120 Construction. [Statutory Authority: RCW 18.72.150. 91-02-012 (Order 105B), recodified as § 246-920-120, filed 12/21/90, effective 1/21/91. Statutory Authority: RCW 18.72.150, 18.130.050 and 18.130.070. 87-14-053 (Order PM 660), § 320-08-001, filed 7/1/87.] Repealed by 96-03-073, filed 1/17/96, effective 2/17/96. Statutory Authority: RCW 18.71.017 and 18.71A.020.

246-920-130 Responsibility for maintaining mailing address on file with the board. [Statutory Authority: RCW 18.72.150. 91-02-012 (Order 105B), recodified as § 246-920-130, filed 12/21/90, effective 1/21/91. Statutory Authority: Chapter 18.72 RCW. 90-20-049 (Order 092), § 320-08-002, filed 9/26/90, effective 10/27/90.] Repealed by 96-03-073, filed 1/17/96, effective 2/17/96. Statutory Authority: RCW 18.71.017 and 18.71A.020.

246-920-140 Appearance and practice before agency—Who may appear. [Statutory Authority: RCW 18.72.150. 91-02-012 (Order 105B), recodified as § 246-920-140, filed 12/21/90, effective 1/21/91. Statutory Authority: RCW 18.72.150, 18.130.050 and 18.130.070. 87-14-053 (Order PM 660), § 320-08-010, filed 7/1/87; Rule 320-08-010, filed 12/14/64.] Repealed by 96-03-073, filed 1/17/96, effective 2/17/96. Statutory Authority: RCW 18.71.017 and 18.71A.020.

246-920-150 Appearance and practice before agency—Solicitation of business unethical. [Statutory Authority: RCW 18.72.150. 91-02-012 (Order 105B), recodified as § 246-920-150, filed 12/21/90, effective 1/21/91. Statutory Authority: RCW 18.72.150, 18.130.050 and 18.130.070. 87-14-053 (Order PM 660), § 320-08-030, filed 7/1/87; Rule 320-08-020, filed 12/14/64.] Repealed by 96-03-073, filed 1/17/96, effective 2/17/96. Statutory Authority: RCW 18.71.017 and 18.71A.020.

246-920-160 Appearance and practice before agency—Standards of ethical conduct. [Statutory Authority: RCW 18.72.150. 91-02-012 (Order 105B), recodified as § 246-920-160, filed 12/21/90, effective 1/21/91. Statutory Authority: RCW 18.72.150, 18.130.050 and 18.130.070. 87-14-053 (Order PM 660), § 320-08-040, filed 7/1/87; Rule 320-08-030, filed 12/14/64.] Repealed by 96-03-073, filed 1/17/96, effective 2/17/96. Statutory Authority: RCW 18.71.017 and 18.71A.020.

246-920-170 Appearance and practice before agency—Appearance by former member of attorney general's staff. [Statutory Authority: RCW 18.72.150. 91-02-012 (Order 105B), recodified as § 246-920-170, filed 12/21/90, effective 1/21/91. Statutory Authority: RCW 18.72.150, 18.130.050 and 18.130.070. 87-14-053 (Order PM 660), § 320-08-050, filed 7/1/87; Rule 320-08-040, filed 12/14/64.] Repealed by 96-03-073, filed 1/17/96, effective 2/17/96. Statutory Authority: RCW 18.71.017 and 18.71A.020.

246-920-180 Appearance and practice before agency—Former employee and board member as witness. [Statutory Authority: RCW 18.72.150. 91-02-012 (Order 105B), recodified as § 246-920-180, filed 12/21/90, effective 1/21/91. Statutory Authority: RCW 18.72.150, 18.130.050 and 18.130.070. 87-14-053 (Order PM 660), § 320-08-055, filed 7/1/87.] Repealed by 96-03-073, filed 1/17/96, effective 2/17/96. Statutory Authority: RCW 18.71.017 and 18.71A.020.

246-920-190 Computation of time. [Statutory Authority: RCW 18.72.150. 91-02-012 (Order 105B), recodified as § 246-920-190, filed 12/21/90, effective 1/21/91. Statutory Authority: RCW 18.72.150, 18.130.050 and 18.130.070. 87-14-053 (Order PM 660), § 320-08-070, filed 7/1/87; Rule 320-08-050, filed 12/14/64.] Repealed by 96-03-073, filed 1/17/96, effective 2/17/96. Statutory Authority: RCW 18.71.017 and 18.71A.020.

246-920-200 Notice and opportunity for hearing in contested cases. [Statutory Authority: RCW 18.72.150. 91-02-012 (Order 105B), recodified as § 246-920-200, filed 12/21/90, effective 1/21/91. Statutory Authority: RCW 18.72.150, 18.130.050 and 18.130.070. 87-14-053 (Order PM 660), § 320-08-080, filed 7/1/87; Rule 320-08-060, filed 12/14/64.] Repealed by 96-03-073, filed 1/17/96, effective 2/17/96. Statutory Authority: RCW 18.71.017 and 18.71A.020.

246-920-210 Service of process—By whom served. [Statutory Authority: RCW 18.72.150. 91-02-012 (Order 105B), recodified as § 246-920-210, filed 12/21/90, effective 1/21/91. Statutory Authority: RCW 18.72.150, 18.130.050 and 18.130.070. 87-14-053 (Order PM 660), § 320-08-090, filed 7/1/87; Rule 320-08-070, filed 12/14/64.] Repealed by 96-03-073, filed 1/17/96, effective 2/17/96. Statutory Authority: RCW 18.71.017 and 18.71A.020.

246-920-220 Service of process—Upon whom served. [Statutory Authority: RCW 18.72.150. 91-02-012 (Order 105B), recodified as § 246-920-220, filed 12/21/90, effective 1/21/91. Statutory Authority: RCW 18.72.150, 18.130.050 and 18.130.070. 87-14-053 (Order PM 660), § 320-08-100, filed 7/1/87; Rule 320-08-080, filed 12/14/64.] Repealed by 96-03-073, filed 1/17/96, effective 2/17/96. Statutory Authority: RCW 18.71.017 and 18.71A.020.

246-920-230 Service of process—Service upon parties. [Statutory Authority: RCW 18.72.150. 91-02-012 (Order 105B), recodified as § 246-920-230, filed 12/21/90, effective 1/21/91; Rule 320-08-090, filed 12/14/64.] Repealed by 96-03-073, filed 1/17/96, effective 2/17/96. Statutory Authority: RCW 18.71.017 and 18.71A.020.

246-920-240 Service of process—Method of service. [Statutory Authority: RCW 18.72.150. 91-02-012 (Order 105B), recodified as § 246-920-240, filed 12/21/90, effective 1/21/91; Rule 320-08-100, filed 12/14/64.] Repealed by 96-03-073, filed 1/17/96, effective 2/17/96. Statutory Authority: RCW 18.71.017 and 18.71A.020.

246-920-250 Service of process—When service complete. [Statutory Authority: RCW 18.72.150. 91-02-012 (Order 105B), recodified as § 246-920-250, filed 12/21/90, effective 1/21/91; Rule 320-08-110, filed 12/14/64.] Repealed by 96-03-073, filed 1/17/96, effective 2/17/96. Statutory Authority: RCW 18.71.017 and 18.71A.020.

246-920-260 Service of process—Filing with Washington state medical disciplinary board. [Statutory Authority: RCW 18.72.150. 91-02-012 (Order 105B), recodified as § 246-920-260, filed 12/21/90, effective 1/21/91. Statutory Authority: RCW 18.72.150, 18.130.050 and 18.130.070. 87-14-053 (Order PM 660), § 320-08-140, filed 7/1/87; Rule 320-08-120, filed 12/14/64.] Repealed by 96-03-073, filed 1/17/96, effective 2/17/96. Statutory Authority: RCW 18.71.017 and 18.71A.020.

246-920-270 Subpoenas where provided by law—Form. [Statutory Authority: RCW 18.72.150. 91-02-012 (Order 105B), recodified as § 246-920-270, filed 12/21/90, effective 1/21/91; Rule 320-08-130, filed 12/14/64.] Repealed by 96-03-073, filed 1/17/96, effective 2/17/96. Statutory Authority: RCW 18.71.017 and 18.71A.020.

246-920-280 Subpoenas where provided by law—Issuance to parties. [Statutory Authority: RCW 18.72.150. 91-02-012 (Order 105B), recodified as § 246-920-280, filed 12/21/90, effective 1/21/91. Statutory Authority: RCW 18.72.150, 18.130.050 and 18.130.070. 87-14-053

(Order PM 660), § 320-08-160, filed 7/1/87; Rule 320-08-140, filed 12/14/64.] Repealed by 96-03-073, filed 1/17/96, effective 2/17/96. Statutory Authority: RCW 18.71.017 and 18.71A.020.

246-920-290 Subpoenas where provided by law—Service. [Statutory Authority: RCW 18.72.150. 91-02-012 (Order 105B), recodified as § 246-920-290, filed 12/21/90, effective 1/21/91; Rule 320-08-150, filed 12/14/64.] Repealed by 96-03-073, filed 1/17/96, effective 2/17/96. Statutory Authority: RCW 18.71.017 and 18.71A.020.

246-920-300 Subpoenas where provided by law—Fees. [Statutory Authority: RCW 18.72.150. 91-02-012 (Order 105B), recodified as § 246-920-300, filed 12/21/90, effective 1/21/91. Statutory Authority: RCW 18.72.150, 18.130.-050 and 18.130.070. 87-14-053 (Order PM 660), § 320-08-180, filed 7/1/87; Rule 320-08-160, filed 12/14/64.] Repealed by 96-03-073, filed 1/17/96, effective 2/17/96. Statutory Authority: RCW 18.71.017 and 18.71A.020.

246-920-310 Subpoenas where provided by law—Proof of service. [Statutory Authority: RCW 18.72.150. 91-02-012 (Order 105B), recodified as § 246-920-310, filed 12/21/90, effective 1/21/91. Statutory Authority: RCW 18.72.150, 18.130.050 and 18.130.070. 87-14-053 (Order PM 660), § 320-08-190, filed 7/1/87; Rule 320-08-170, filed 12/14/64.] Repealed by 96-03-073, filed 1/17/96, effective 2/17/96. Statutory Authority: RCW 18.71.017 and 18.71A.020.

246-920-320 Subpoenas where provided by law—Quashing. [Statutory Authority: RCW 18.72.150. 91-02-012 (Order 105B), recodified as § 246-920-320, filed 12/21/90, effective 1/21/91. Statutory Authority: RCW 18.72.-150, 18.130.050 and 18.130.070. 87-14-053 (Order PM 660), § 320-08-200, filed 7/1/87; Rule 320-08-180, filed 12/14/64.] Repealed by 96-03-073, filed 1/17/96, effective 2/17/96. Statutory Authority: RCW 18.71.017 and 18.71A.020.

246-920-330 Subpoenas where provided by law—Enforcement. [Statutory Authority: RCW 18.72.150. 91-02-012 (Order 105B), recodified as § 246-920-330, filed 12/21/90, effective 1/21/91. Statutory Authority: RCW 18.72.150, 18.130.050 and 18.130.070. 87-14-053 (Order PM 660), § 320-08-210, filed 7/1/87; Rule 320-08-190, filed 12/14/64.] Repealed by 96-03-073, filed 1/17/96, effective 2/17/96. Statutory Authority: RCW 18.71.017 and 18.71A.020.

246-920-340 Subpoenas where provided by law—Geographical scope. [Statutory Authority: RCW 18.72.150. 91-02-012 (Order 105B), recodified as § 246-920-340, filed 12/21/90, effective 1/21/91; Rule 320-08-200, filed 12/14/64.] Repealed by 96-03-073, filed 1/17/96, effective 2/17/96. Statutory Authority: RCW 18.71.017 and 18.71A.020.

246-920-350 Depositions and interrogatories in contested cases—Right to take. [Statutory Authority: RCW 18.72.150. 91-02-012 (Order 105B), recodified as § 246-920-350, filed 12/21/90, effective 1/21/91; Rule 320-08-210, filed 12/14/64.] Repealed by 96-03-073, filed 1/17/96, effective 2/17/96. Statutory Authority: RCW 18.71.017 and 18.71A.020.

246-920-360 Depositions and interrogatories in contested cases—Scope. [Statutory Authority: RCW 18.72.150. 91-02-012 (Order 105B), recodified as § 246-920-360, filed 12/21/90, effective 1/21/91; Rule 320-08-220, filed 12/14/64.] Repealed by 96-03-073, filed 1/17/96, effective 2/17/96. Statutory Authority: RCW 18.71.017 and 18.71A.020.

246-920-370 Depositions and interrogatories in contested cases—Officer before whom taken. [Statutory Authority: RCW 18.72.150. 91-02-012 (Order 105B), recodified as § 246-920-370, filed 12/21/90, effective 1/21/91; Rule 320-08-230, filed 12/14/64.] Repealed by 96-03-073, filed 1/17/96, effective 2/17/96. Statutory Authority: RCW 18.71.017 and 18.71A.020.

246-920-380 Depositions and interrogatories in contested cases—Authorization. [Statutory Authority: RCW 18.72.150. 91-02-012 (Order 105B), recodified as § 246-920-380, filed 12/21/90, effective 1/21/91. Statutory Authority: RCW 18.72.150, 18.130.050 and 18.130.070. 87-14-053 (Order PM 660), § 320-08-260, filed 7/1/87; Rule 320-08-240, filed 12/14/64.] Repealed by 96-03-073, filed 1/17/96, effective 2/17/96. Statutory Authority: RCW 18.71.017 and 18.71A.020.

246-920-390 Depositions and interrogatories in contested cases—Protection of parties and deponents. [Statutory Authority: RCW 18.72.150. 91-02-012 (Order 105B), recodified as § 246-920-390, filed 12/21/90, effective 1/21/91. Statutory Authority: RCW 18.72.150, 18.130.050 and 18.130.070. 87-14-053 (Order PM 660), § 320-08-270, filed 7/1/87; Rule 320-08-250, filed 12/14/64.] Repealed by 96-03-073, filed 1/17/96, effective 2/17/96. Statutory Authority: RCW 18.71.017 and 18.71A.020.

246-920-400 Depositions and interrogatories in contested cases—Oral examination and cross-examination. [Statutory Authority: RCW 18.72.150. 91-02-012 (Order 105B), recodified as § 246-920-400, filed 12/21/90, effective 1/21/91; Rule 320-08-260, filed 12/14/64.] Repealed by 96-03-073, filed 1/17/96, effective 2/17/96. Statutory Authority: RCW 18.71.017 and 18.71A.020.

246-920-410 Depositions and interrogatories in contested cases—Recordation. [Statutory Authority: RCW 18.72.150. 91-02-012 (Order 105B), recodified as § 246-920-410, filed 12/21/90, effective 1/21/91; Rule 320-08-270, filed 12/14/64.] Repealed by 96-03-073, filed 1/17/96, effective 2/17/96. Statutory Authority: RCW 18.71.017 and 18.71A.020.

246-920-420 Depositions and interrogatories in contested cases—Signing attestation and return. [Statutory Authority: RCW 18.72.150. 91-02-012 (Order 105B), recodified as § 246-920-420, filed 12/21/90, effective 1/21/91. Statutory Authority: RCW 18.72.150, 18.130.050 and 18.130.070. 87-14-053 (Order PM 660), § 320-08-300, filed 7/1/87; Rule 320-08-280, filed 12/14/64.] Repealed by 96-03-073, filed 1/17/96, effective 2/17/96. Statutory Authority: RCW 18.71.017 and 18.71A.020.

246-920-430 Depositions and interrogatories in contested cases—Use and effect. [Statutory Authority: RCW 18.72.150. 91-02-012 (Order 105B), recodified as § 246-920-430, filed 12/21/90, effective 1/21/91. Statutory Authority: RCW 18.72.150, 18.130.050 and 18.130.070. 87-14-053 (Order PM 660), § 320-08-310, filed 7/1/87; Rule 320-08-290, filed 12/14/64.] Repealed by 96-03-073, filed 1/17/96, effective 2/17/96. Statutory Authority: RCW 18.71.017 and 18.71A.020.

246-920-440 Depositions and interrogatories in contested cases—Fees of officers and deponents. [Statutory Authority: RCW 18.72.150. 91-02-012 (Order 105B), recodified as § 246-920-440, filed 12/21/90, effective 1/21/91; Rule 320-08-300, filed 12/14/64.] Repealed by 96-03-073, filed 1/17/96, effective 2/17/96. Statutory Authority: RCW 18.71.017 and 18.71A.020.

246-920-450 Depositions upon interrogatories—Submission of interrogatories. [Statutory Authority: RCW 18.72.150. 91-02-012 (Order 105B), recodified as § 246-920-450, filed 12/21/90, effective 1/21/91; Rule 320-08-310, filed 12/14/64.] Repealed by 96-03-073, filed 1/17/96, effective 2/17/96. Statutory Authority: RCW 18.71.017 and 18.71A.020.

246-920-460 Depositions upon interrogatories—Interrogation. [Statutory Authority: RCW 18.72.150. 91-02-012 (Order 105B), recodified as § 246-920-460, filed 12/21/90, effective 1/21/91; Rule 320-08-320, filed 12/14/64.] Repealed by 96-03-073, filed 1/17/96, effective 2/17/96. Statutory Authority: RCW 18.71.017 and 18.71A.020.

246-920-470 Depositions upon interrogatories—Attestation and return. [Statutory Authority: RCW 18.72.150. 91-02-012 (Order 105B), recodified as § 246-920-470, filed 12/21/90, effective 1/21/91. Statutory Authority: RCW 18.72.150, 18.130.050 and 18.130.070. 87-14-053 (Order PM 660), § 320-08-350, filed 7/1/87; Rule 320-08-330, filed 12/14/64.] Repealed by 96-03-073, filed 1/17/96, effective 2/17/96. Statutory Authority: RCW 18.71.017 and 18.71A.020.

246-920-480 Depositions upon interrogatories—Provisions of deposition rule. [Statutory Authority: RCW 18.72.150. 91-02-012 (Order 105B), recodified as § 246-920-480, filed 12/21/90, effective 1/21/91; Rule 320-08-340, filed 12/14/64.] Repealed by 96-03-073, filed 1/17/96, effective 2/17/96. Statutory Authority: RCW 18.71.017 and 18.71A.020.

246-920-490 Official notice—Matters of law. [Statutory Authority: RCW 18.72.150. 91-02-012 (Order 105B), recodified as § 246-920-490, filed 12/21/90, effective 1/21/91. Statutory Authority: RCW 18.72.150, 18.130.050 and 18.130.070. 87-14-053 (Order PM 660), § 320-08-370, filed 7/1/87; Rule 320-08-350, filed 12/14/64.] Repealed by 96-03-073, filed 1/17/96, effective 2/17/96. Statutory Authority: RCW 18.71.017 and 18.71A.020.

246-920-500 Official notice—Material facts. [Statutory Authority: RCW 18.72.150. 91-02-012 (Order 105B), recodified as § 246-920-500, filed 12/21/90, effective 1/21/91. Statutory Authority: RCW 18.72.150, 18.130.050 and 18.130.070. 87-14-053 (Order PM 660), § 320-08-380, filed 7/1/87; Rule 320-08-360, filed 12/14/64.] Repealed by 96-03-073, filed 1/17/96, effective 2/17/96. Statutory Authority: RCW 18.71.017 and 18.71A.020.

246-920-510 Presumptions. [Statutory Authority: RCW 18.72.150. 91-02-012 (Order 105B), recodified as § 246-920-510, filed 12/21/90, effective 1/21/91. Statutory Authority: RCW 18.72.150, 18.130.050 and 18.130.070. 87-14-053 (Order PM 660), § 320-08-390, filed 7/1/87; Rule 320-08-370, filed 12/14/64.] Repealed by 96-03-073, filed 1/17/96, effective 2/17/96. Statutory Authority: RCW 18.71.017 and 18.71A.020.

246-920-520 Stipulations and admissions of record. [Statutory Authority: RCW 18.72.150. 91-02-012 (Order 105B), recodified as § 246-920-520, filed 12/21/90, effective 1/21/91. Statutory Authority: RCW 18.72.150, 18.130.-050 and 18.130.070. 87-14-053 (Order PM 660), § 320-08-400, filed 7/1/87; Rule 320-08-380, filed 12/14/64.] Repealed by 96-03-073, filed 1/17/96, effective 2/17/96. Statutory Authority: RCW 18.71.017 and 18.71A.020.

246-920-530 Form and content of decisions in contested cases. [Statutory Authority: RCW 18.72.150. 91-02-012 (Order 105B), recodified as § 246-920-530, filed 12/21/90, effective 1/21/91. Statutory Authority: RCW 18.72.-150, 18.130.050 and 18.130.070. 87-14-053 (Order PM 660), § 320-08-410, filed 7/1/87; Rule 320-08-390, filed 12/14/64.] Repealed by 96-03-073, filed 1/17/96, effective 2/17/96. Statutory Authority: RCW 18.71.017 and 18.71A.020.

246-920-540 Definition of issues before hearing. [Statutory Authority: RCW 18.72.150. 91-02-012 (Order 105B), recodified as § 246-920-540, filed 12/21/90, effective 1/21/91. Statutory Authority: RCW 18.72.150, 18.130.050 and 18.130.070. 87-14-053 (Order PM 660), § 320-08-420, filed 7/1/87; Rule 320-08-400, filed 12/14/64.] Repealed by 96-03-073, filed 1/17/96, effective 2/17/96. Statutory Authority: RCW 18.71.017 and 18.71A.020.

246-920-550 Prehearing conference rule—Authorized. [Statutory Authority: RCW 18.72.150. 91-02-012 (Order 105B), recodified as § 246-920-550, filed 12/21/90, effective 1/21/91. Statutory Authority: RCW 18.72.150, 18.130.-050 and 18.130.070. 87-14-053 (Order PM 660), § 320-08-430, filed 7/1/87; Rule 320-08-410, filed 12/14/64.] Repealed by 96-03-073, filed 1/17/96, effective 2/17/96. Statutory Authority: RCW 18.71.017 and 18.71A.020.

246-920-560 Prehearing conference rule—Record of conference action. [Statutory Authority: RCW 18.72.150. 91-02-012 (Order 105B), recodified as § 246-920-560, filed 12/21/90, effective 1/21/91. Statutory Authority: RCW 18.72.150, 18.130.050 and 18.130.070. 87-14-053 (Order PM 660), § 320-08-440, filed 7/1/87; Rule 320-08-420, filed 12/14/64.] Repealed by 96-03-073, filed 1/17/96, effective 2/17/96. Statutory Authority: RCW 18.71.017 and 18.71A.020.

246-920-570 Motions. [Statutory Authority: RCW 18.72.150. 91-02-012 (Order 105B), recodified as § 246-920-570, filed 12/21/90, effective 1/21/91. Statutory Authority: RCW 18.72.150, 18.130.050 and 18.130.070. 87-14-053 (Order PM 660), § 320-08-445, filed 7/1/87.] Repealed by 96-03-073, filed 1/17/96, effective 2/17/96. Statutory Authority: RCW 18.71.017 and 18.71A.020.

246-920-580 Submission of documentary evidence in advance. [Statutory Authority: RCW 18.72.150. 91-02-012 (Order 105B), recodified as § 246-920-580, filed 12/21/90, effective 1/21/91. Statutory Authority: RCW 18.72.-150, 18.130.050 and 18.130.070. 87-14-053 (Order PM 660), § 320-08-450, filed 7/1/87; Rule 320-08-430, filed 12/14/64.] Repealed by 96-03-073, filed 1/17/96, effective 2/17/96. Statutory Authority: RCW 18.71.017 and 18.71A.020.

246-920-590 Excerpts from documentary evidence. [Statutory Authority: RCW 18.72.150. 91-02-012 (Order 105B), recodified as § 246-920-590, filed 12/21/90, effective 1/21/91. Statutory Authority: RCW 18.72.150, 18.130.-050 and 18.130.070. 87-14-053 (Order PM 660), § 320-08-460, filed 7/1/87; Rule 320-08-440, filed 12/14/64.] Repealed by 96-03-073, filed 1/17/96, effective 2/17/96. Statutory Authority: RCW 18.71.017 and 18.71A.020.

246-920-600 Expert or opinion testimony and testimony based on economic and statistical data—Number and qualifications of witnesses. [Statutory Authority: RCW 18.72.150. 91-02-012 (Order 105B), recodified as § 246-920-600, filed 12/21/90, effective 1/21/91. Statutory Authority: RCW 18.72.150, 18.130.050 and 18.130.070. 87-14-053 (Order PM 660), § 320-08-470, filed 7/1/87; Rule 320-08-450, filed 12/14/64.] Repealed by 96-03-073, filed 1/17/96, effective 2/17/96. Statutory Authority: RCW 18.71.017 and 18.71A.020.

246-920-610 Continuances. [Statutory Authority: RCW 18.72.150. 91-02-012 (Order 105B), recodified as § 246-920-610, filed 12/21/90, effective 1/21/91. Statutory Authority: RCW 18.72.150, 18.130.050 and 18.130.070. 87-14-053 (Order PM 660), § 320-08-510, filed 7/1/87; Rule 320-08-460, filed 12/14/64.] Repealed by 96-03-073, filed 1/17/96, effective 2/17/96. Statutory Authority: RCW 18.71.017 and 18.71A.020.

246-920-620 Rules of evidence—Admissibility criteria. [Statutory Authority: RCW 18.72.150. 91-02-012 (Order 105B), recodified as § 246-920-620, filed 12/21/90, effective 1/21/91. Statutory Authority: RCW 18.72.150, 18.130.-050 and 18.130.070. 87-14-053 (Order PM 660), § 320-08-520, filed 7/1/87; Rule 320-08-470, filed 12/14/64.] Repealed by 96-03-073, filed 1/17/96, effective 2/17/96. Statutory Authority: RCW 18.71.017 and 18.71A.020.

246-920-630 Rules of evidence—Tentative admission—Exclusion—Discontinuance—Objections. [Statutory Authority: RCW 18.72.150. 91-02-012 (Order 105B), recodified as § 246-920-630, filed 12/21/90, effective 1/21/91. Statutory Authority: RCW 18.72.150, 18.130.050 and 18.130.070. 87-14-053 (Order PM 660), § 320-08-530, filed 7/1/87; Rule 320-08-480, filed 12/14/64.] Repealed by 96-03-073, filed 1/17/96, effective 2/17/96. Statutory Authority: RCW 18.71.017 and 18.71A.020.

246-920-640 Petitions for rule making, amendment or repeal—Who may petition. [Statutory Authority: RCW 18.72.150. 91-02-012 (Order 105B), recodified as § 246-920-640, filed 12/21/90, effective 1/21/91. Statutory Authority: RCW 18.72.150, 18.130.050 and 18.130.070. 87-14-053 (Order PM 660), § 320-08-540, filed 7/1/87; Rule 320-08-490, filed 12/14/64.] Repealed by 96-03-073, filed 1/17/96, effective 2/17/96. Statutory Authority: RCW 18.71.017 and 18.71A.020.

246-920-650 Petitions for rule making, amendment or repeal—Requisites. [Statutory Authority: RCW 18.72.150. 91-02-012 (Order 105B), recodified as § 246-920-650, filed 12/21/90, effective 1/21/91; Rule 320-08-500, filed 12/14/64.] Repealed by 96-03-073, filed 1/17/96, effective 2/17/96. Statutory Authority: RCW 18.71.017 and 18.71A.020.

246-920-660 Petitions for rule making, amendment or repeal—Agency must consider. [Statutory Authority: RCW 18.72.150. 91-02-012 (Order 105B), recodified as § 246-920-660, filed 12/21/90, effective 1/21/91; Rule 320-08-510, filed 12/14/64.] Repealed by 96-03-073, filed 1/17/96, effective 2/17/96. Statutory Authority: RCW 18.71.017 and 18.71A.020.

246-920-670 Petitions for rule making, amendment or repeal—Notice of disposition. [Statutory Authority: RCW 18.72.150. 91-02-012 (Order 105B), recodified as § 246-920-670, filed 12/21/90, effective 1/21/91; Rule 320-08-520, filed 12/14/64.] Repealed by 96-03-073, filed 1/17/96, effective 2/17/96. Statutory Authority: RCW 18.71.017 and 18.71A.020.

246-920-680 Declaratory rulings. [Statutory Authority: RCW 18.72.-150. 91-02-012 (Order 105B), recodified as § 246-920-680, filed 12/21/90, effective 1/21/91; Rule 320-08-530, filed 12/14/64.] Repealed by 96-03-073, filed 1/17/96, effective 2/17/96. Statutory Authority: RCW 18.71.017 and 18.71A.020.

246-920-690 Forms. [Statutory Authority: RCW 18.72.150. 91-02-012 (Order 105B), recodified as § 246-920-690, filed 12/21/90, effective 1/21/91; Rule 320-08-540, filed 12/14/64.] Repealed by 96-03-073, filed 1/17/96, effective 2/17/96. Statutory Authority: RCW 18.71.017 and 18.71A.020.

246-920-710 General provisions. [Statutory Authority: RCW 18.72.150. 91-02-012 (Order 105B), recodified as § 246-920-710, filed 12/21/90, effective 1/21/91. Statutory Authority: RCW 18.72.150, 18.130.050 and 18.130.070. 87-14-047 (Order PM 659), § 320-20-010, filed 6/30/87. Statutory Authority: RCW 18.72.265. 80-16-024 (Order PL 360), § 320-20-010, filed 10/29/80, effective 1/1/81.] Repealed by 96-03-073, filed 1/17/96,

effective 2/17/96. Statutory Authority: RCW 18.71.017 and 18.71A.020.

246-920-720 Mandatory reporting. [Statutory Authority: RCW 18.72.150. 91-02-012 (Order 105B), recodified as § 246-920-720, filed 12/21/90, effective 1/21/91. Statutory Authority: RCW 18.72.150, 18.130.050 and 18.130.070. 87-14-047 (Order PM 659), § 320-20-020, filed 6/30/87. Statutory Authority: RCW 18.72.265. 80-16-024 (Order PL 360), § 320-20-020, filed 10/29/80, effective 1/1/81.] Repealed by 96-03-073, filed 1/17/96, effective 2/17/96. Statutory Authority: RCW 18.71.017 and 18.71A.020.

246-920-730 Health care institutions. [Statutory Authority: Chapter 18.72 RCW. 91-17-015 (Order 190B), § 246-920-730, filed 8/13/91, effective 9/13/91. Statutory Authority: RCW 18.72.150. 91-02-012 (Order 105B), recodified as § 246-920-730, filed 12/21/90, effective 1/21/91. Statutory Authority: RCW 18.72.150, 18.130.050 and 18.130.070. 87-14-047 (Order PM 659), § 320-20-030, filed 6/30/87. Statutory Authority: RCW 18.72.265. 80-16-024 (Order PL 360), § 320-20-030, filed 10/29/80, effective 1/1/81.] Repealed by 96-03-073, filed 1/17/96, effective 2/17/96. Statutory Authority: RCW 18.71.017 and 18.71A.020.

246-920-740 Medical associations or societies. [Statutory Authority: RCW 18.72.150. 91-02-012 (Order 105B), recodified as § 246-920-740, filed 12/21/90, effective 1/21/91. Statutory Authority: RCW 18.72.265. 80-16-024 (Order PL 360), § 320-20-040, filed 10/29/80, effective 1/1/81.] Repealed by 96-03-073, filed 1/17/96, effective 2/17/96. Statutory Authority: RCW 18.71.017 and 18.71A.020.

246-920-750 Health care service contractors and disability insurance carriers. [Statutory Authority: RCW 18.72.150. 91-02-012 (Order 105B), recodified as § 246-920-750, filed 12/21/90, effective 1/21/91. Statutory Authority: RCW 18.72.265. 80-16-024 (Order PL 360), § 320-20-050, filed 10/29/80, effective 1/1/81.] Repealed by 96-03-073, filed 1/17/96, effective 2/17/96. Statutory Authority: RCW 18.71.017 and 18.71A.020.

246-920-760 Courts. [Statutory Authority: RCW 18.72.150. 91-02-012 (Order 105B), recodified as § 246-920-760, filed 12/21/90, effective 1/21/91. Statutory Authority: RCW 18.72.265. 80-16-024 (Order PL 360), § 320-20-070, filed 10/29/80, effective 1/1/81.] Repealed by 96-03-073, filed 1/17/96, effective 2/17/96. Statutory Authority: RCW 18.71.017 and 18.71A.020.

246-920-770 State and federal agencies. [Statutory Authority: RCW 18.72.150. 91-02-012 (Order 105B), recodified as § 246-920-770, filed 12/21/90, effective 1/21/91. Statutory Authority: RCW 18.72.265. 80-16-024 (Order PL 360), § 320-20-080, filed 10/29/80, effective 1/1/81.] Repealed by 96-03-073, filed 1/17/96, effective 2/17/96. Statutory Authority: RCW 18.71.017 and 18.71A.020.

246-920-780 Professional standards review organizations. [Statutory Authority: RCW 18.72.150. 91-02-012 (Order 105B), recodified as § 246-920-780, filed 12/21/90, effective 1/21/91. Statutory Authority: RCW 18.72.265. 80-16-024 (Order PL 360), § 320-20-090, filed 10/29/80, effective 1/1/81.] Repealed by 96-03-073, filed 1/17/96, effective 2/17/96. Statutory Authority: RCW 18.71.017 and 18.71A.020.

246-920-820 Election years in congressional districts. [Statutory Authority: RCW 18.72.150. 91-02-012 (Order 105B), recodified as § 246-920-820, filed 12/21/90, effective 1/21/91; Rule 320-12-010, filed 12/14/64.] Repealed by 91-20-168 (Order 202B), filed 10/2/91, effective 11/2/91. Statutory Authority: RCW 18.72.150.

246-920-830 Residential requirement. [Statutory Authority: RCW 18.72.150. 91-02-012 (Order 105B), recodified as § 246-920-830, filed 12/21/90, effective 1/21/91; Rule 320-12-020, filed 12/14/64.] Repealed by 91-20-168 (Order 202B), filed 10/2/91, effective 11/2/91. Statutory Authority: RCW 18.72.150.

246-920-840 Nominating petitions. [Statutory Authority: RCW 18.72.150. 91-02-012 (Order 105B), recodified as § 246-920-840, filed 12/21/90, effective 1/21/91. Statutory Authority: RCW 18.72.150, 18.130.050 and 18.130.070. 87-14-047 (Order PM 659), § 320-12-030, filed 6/30/87. Statutory Authority: RCW 18.72.150. 82-01-066 (Order PL 388), § 320-12-030, filed 12/18/81; Rule 320-12-030, filed 12/14/64.] Repealed by 91-20-168 (Order 202B), filed 10/2/91, effective 11/2/91. Statutory Authority: RCW 18.72.150.

246-920-850 Eligibility requirement in elections. [Statutory Authority: RCW 18.72.150. 91-02-012 (Order 105B), recodified as § 246-920-850, filed 12/21/90, effective 1/21/91; 82-01-066 (Order PL 388), § 320-12-040, filed 12/18/81; Rule 320-12-040, filed 12/14/64.] Repealed by 91-20-168 (Order 202B), filed 10/2/91, effective 11/2/91. Statutory Authority: RCW 18.72.150.

246-920-860 Time of election—Ballots. [Statutory Authority: RCW 18.72.150. 91-02-012 (Order 105B), recodified as § 246-920-860, filed 12/21/90, effective 1/21/91. Statutory Authority: RCW 18.72.150, 18.130.050 and 18.130.070. 87-14-047 (Order PM 659), § 320-12-050, filed 6/30/87. Statutory Authority: RCW 18.72.150. 82-01-066 (Order PL 388), § 320-12-050, filed 12/18/81; Rule 320-12-050, filed 12/14/64.] Repealed by 91-20-168 (Order 202B), filed 10/2/91, effective 11/2/91. Statutory Authority: RCW 18.72.150.

246-920-870 Identification by congressional district. [Statutory Authority: RCW 18.72.150. 91-02-012 (Order 105B), recodified as § 246-920-870, filed 12/21/90, effective 1/21/91. Statutory Authority: RCW 18.72.150, 18.130.-050 and 18.130.070. 87-14-047 (Order PM 659), § 320-12-060, filed 6/30/87. Statutory Authority: RCW 18.72.150. 82-01-066 (Order PL 388), § 320-12-060, filed 12/18/81; Rule 320-12-060, filed 12/14/64.] Repealed by 91-20-168 (Order 202B), filed 10/2/91, effective 11/2/91. Statutory Authority: RCW 18.72.-150.

246-920-880 Ballots. [Statutory Authority: RCW 18.72.150. 91-02-012 (Order 105B), recodified as § 246-920-880, filed 12/21/90, effective 1/21/91. Statutory Authority: RCW 18.72.150, 18.130.050 and 18.130.070. 87-14-047 (Order PM 659), § 320-12-070, filed 6/30/87. Statutory Authority: RCW 18.72.150. 82-01-066 (Order PL 388), § 320-12-070, filed 12/18/81; Rule 320-12-070, filed 12/14/64.] Repealed by 91-20-168 (Order 202B), filed 10/2/91, effective 11/2/91. Statutory Authority: RCW 18.72.150.

246-920-890 Canvassing and certification. [Statutory Authority: RCW 18.72.150. 91-02-012 (Order 105B), recodified as § 246-920-890, filed 12/21/90, effective 1/21/91; Rule 320-12-080, filed 12/14/64.] Repealed by 96-03-073, filed 1/17/96, effective 2/17/96. Statutory Authority: RCW 18.71.017 and 18.71A.020.

Reviser's note: Later promulgation, see chapter 246-919 WAC.

Chapter 246-975
AMBULANCES

246-975-001 Declaration of purpose. [Statutory Authority: RCW 43.70.040. 91-02-049 (Order 121), recodified as § 246-975-001, filed 12/27/90, effective 1/31/91. Statutory Authority: RCW 18.73.080. 82-04-041 (Order 1752), § 248-17-010, filed 1/29/82; Order 1150, § 248-17-010, filed 9/2/76.] Repealed by 93-01-148 (Order 323), filed 12/23/92, effective 1/23/93. Statutory Authority: RCW 43.70.040 and chapters 18.71, 18.73 and 70.168 RCW.

246-975-010 Definitions. [Statutory Authority: RCW 43.70.040. 91-02-049 (Order 121), recodified as § 246-975-010, filed 12/27/90, effective 1/31/91. Statutory Authority: Chapter 18.73 RCW. 89-22-108 (Order 007), § 248-17-020, filed 11/1/89, effective 12/2/89. Statutory Authority: RCW 18.73.080. 84-17-036 (Order 2138), § 248-17-020, filed 8/10/84; 82-19-080 (Order 1881), § 248-17-020, filed 9/21/82; 82-04-041 (Order 1752), § 248-17-020, filed 1/29/82; Order 1150, § 248-17-020, filed 9/2/76.] Repealed by 93-01-148 (Order 323), filed 12/23/92, effective 1/23/93. Statutory Authority: RCW 43.70.040 and chapters 18.71, 18.73 and 70.168 RCW.

246-975-020 License(s) required. [Statutory Authority: RCW 43.70.040. 91-02-049 (Order 121), recodified as § 246-975-020, filed 12/27/90, effective 1/31/91. Statutory Authority: RCW 18.73.080. 82-04-041 (Order 1752), § 248-17-030, filed 1/29/82; Order 1150, § 248-17-030, filed 9/2/76.] Repealed by 93-01-148 (Order 323), filed 12/23/92, effective 1/23/93. Statutory Authority: RCW 43.70.040 and chapters 18.71, 18.73 and 70.168 RCW.

246-975-030 License expiration dates. [Statutory Authority: RCW 43.70.040. 91-02-049 (Order 121), recodified as § 246-975-030, filed 12/27/90, effective 1/31/91. Statutory Authority: RCW 18.73.080. 82-04-041 (Order 1752), § 248-17-040, filed 1/29/82; Order 1150, § 248-17-040, filed 9/2/76.] Repealed by 93-01-148 (Order 323), filed

12/23/92, effective 1/23/93. Statutory Authority: RCW 43.70.040 and chapters 18.71, 18.73 and 70.168 RCW.

246-975-040 License expiration dates. [Statutory Authority: RCW 43.70.040. 91-02-049 (Order 121), recodified as § 246-975-040, filed 12/27/90, effective 1/31/91. Statutory Authority: RCW 18.73.080. 82-04-041 (Order 1752), § 248-17-050, filed 1/29/82; Order 1150, § 248-17-050, filed 9/2/76.] Repealed by 93-01-148 (Order 323), filed 12/23/92, effective 1/23/93. Statutory Authority: RCW 43.70.040 and chapters 18.71, 18.73 and 70.168 RCW.

246-975-050 Denial, suspension, revocation of license—Notice—Adjudicative proceeding. [Statutory Authority: RCW 43.70.040. 91-02-049 (Order 121), recodified as § 246-975-050, filed 12/27/90, effective 1/31/91. Statutory Authority: Chapter 34.05 RCW, RCW 34.05.220 (1)(a) and 1989 1st ex.s. c 9 § 106. 90-06-019 (Order 039), § 248-17-060, filed 2/28/90, effective 3/1/90; Order 1150, § 248-17-060, filed 9/2/76.] Repealed by 93-01-148 (Order 323), filed 12/23/92, effective 1/23/93. Statutory Authority: RCW 43.70.040 and chapters 18.71, 18.73 and 70.168 RCW.

246-975-060 Ambulance vehicle and equipment. [Statutory Authority: RCW 43.70.040. 91-02-049 (Order 121), recodified as § 246-975-060, filed 12/27/90, effective 1/31/91; Order 1150, § 248-17-070, filed 9/2/76.] Repealed by 93-01-148 (Order 323), filed 12/23/92, effective 1/23/93. Statutory Authority: RCW 43.70.040 and chapters 18.71, 18.73 and 70.168 RCW.

246-975-070 Extrication equipment. [Statutory Authority: RCW 43.70.040. 91-02-049 (Order 121), recodified as § 246-975-070, filed 12/27/90, effective 1/31/91. Statutory Authority: RCW 18.73.080. 82-19-080 (Order 1881), § 248-17-080, filed 9/21/82; Order 1150, § 248-17-080, filed 9/2/76.] Repealed by 93-01-148 (Order 323), filed 12/23/92, effective 1/23/93. Statutory Authority: RCW 43.70.040 and chapters 18.71, 18.73 and 70.168 RCW.

246-975-080 Variances. [Statutory Authority: RCW 43.70.040. 91-02-049 (Order 121), recodified as § 246-975-080, filed 12/27/90, effective 1/31/91; Order 1150, § 248-17-090, filed 9/2/76.] Repealed by 93-01-148 (Order 323), filed 12/23/92, effective 1/23/93. Statutory Authority: RCW 43.70.040 and chapters 18.71, 18.73 and 70.168 RCW.

246-975-090 Radio communications equipment—Ambulance vehicle. [Statutory Authority: RCW 43.70.040. 91-02-049 (Order 121), recodified as § 246-975-090, filed 12/27/90, effective 1/31/91; Order 1150, § 248-17-100, filed 9/2/76.] Repealed by 93-01-148 (Order 323), filed 12/23/92, effective 1/23/93. Statutory Authority: RCW 43.70.040 and chapters 18.71, 18.73 and 70.168 RCW.

246-975-100 First aid vehicle and equipment. [Statutory Authority: RCW 43.70.040. 91-02-049 (Order 121), recodified as § 246-975-100, filed 12/27/90, effective 1/31/91. Statutory Authority: RCW 18.73.080. 82-19-080 (Order 1881), § 248-17-110, filed 9/21/82; Order 1150, § 248-17-110, filed 9/2/76.] Repealed by 93-01-148 (Order 323), filed 12/23/92, effective 1/23/93. Statutory Authority: RCW 43.70.040 and chapters 18.71, 18.73 and 70.168 RCW.

246-975-110 Extrication equipment. [Statutory Authority: RCW 43.70.040. 91-02-049 (Order 121), recodified as § 246-975-110, filed 12/27/90, effective 1/31/91. Statutory Authority: RCW 18.73.080. 82-19-080 (Order 1881), § 248-17-120, filed 9/21/82; Order 1150, § 248-17-120, filed 9/2/76.] Repealed by 93-01-148 (Order 323), filed 12/23/92, effective 1/23/93. Statutory Authority: RCW 43.70.040 and chapters 18.71, 18.73 and 70.168 RCW.

246-975-120 Variances. [Statutory Authority: RCW 43.70.040. 91-02-049 (Order 121), recodified as § 246-975-120, filed 12/27/90, effective 1/31/91; Order 1150, § 248-17-130, filed 9/2/76.] Repealed by 93-01-148 (Order 323), filed 12/23/92, effective 1/23/93. Statutory Authority: RCW 43.70.040 and chapters 18.71, 18.73 and 70.168 RCW.

246-975-130 Air ambulance services. [Statutory Authority: RCW 43.70.040. 91-02-049 (Order 121), recodified as § 246-975-130, filed 12/27/90, effective 1/31/91. Statutory Authority: RCW 18.73.080. 82-04-041 (Order 1752), § 248-17-135, filed 1/29/82.] Repealed by 93-01-148 (Order 323), filed 12/23/92, effective 1/23/93. Statutory Authority: RCW 43.70.040 and chapters 18.71, 18.73 and 70.168 RCW.

246-975-140 Radio communications equipment. [Statutory Authority: RCW 43.70.040. 91-02-049 (Order 121), recodified as § 246-975-140, filed 12/27/90, effective 1/31/91; Order 1150, § 248-17-140, filed 9/2/76.] Repealed by 93-01-148 (Order 323), filed 12/23/92, effective 1/23/93. Statutory Authority: RCW 43.70.040 and chapters 18.71, 18.73 and 70.168 RCW.

246-975-150 Variances from the requirements of this chapter. [Statutory Authority: RCW 43.70.040. 91-02-049 (Order 121), recodified as § 246-975-150, filed 12/27/90, effective 1/31/91; Order 1150, § 248-17-150, filed 9/2/76.] Repealed by 93-01-148 (Order 323), filed 12/23/92, effective 1/23/93. Statutory Authority: RCW 43.70.040 and chapters 18.71, 18.73 and 70.168 RCW.

246-975-160 Ambulance operator, ambulance director record requirements. [Statutory Authority: Chapter 18.73 RCW. 91-06-026 (Order 126), § 246-975-160, filed 2/26/91, effective 3/29/91. Statutory Authority: RCW 43.70.040. 91-02-049 (Order 121), recodified as § 246-975-160, filed 12/27/90, effective 1/31/91; Order 1150, § 248-17-160, filed 9/2/76.] Repealed by 93-01-148 (Order 323), filed 12/23/92, effective 1/23/93. Statutory Authority: RCW 43.70.040 and chapters 18.71, 18.73 and 70.168 RCW.

246-975-170 Liability insurance. [Statutory Authority: RCW 43.70.-040. 91-02-049 (Order 121), recodified as § 246-975-170, filed 12/27/90, effective 1/31/91; Order 1150, § 248-17-170, filed 9/2/76.] Repealed by 93-01-148 (Order 323), filed 12/23/92, effective 1/23/93. Statutory Authority: RCW 43.70.040 and chapters 18.71, 18.73 and 70.168 RCW.

246-975-180 First aid vehicle operator, first aid vehicle director requirements. [Statutory Authority: Chapter 18.73 RCW. 91-06-026 (Order 126), § 246-975-180, filed 2/26/91, effective 3/29/91. Statutory Authority: RCW 43.70.040. 91-02-049 (Order 121), recodified as § 246-975-180, filed 12/27/90, effective 1/31/91; Order 1150, § 248-17-180, filed 9/2/76.] Repealed by 93-01-148 (Order 323), filed 12/23/92, effective 1/23/93. Statutory Authority: RCW 43.70.040 and chapters 18.71, 18.73 and 70.168 RCW.

246-975-190 Personnel requirements. [Statutory Authority: RCW 43.70.040. 91-02-049 (Order 121), recodified as § 246-975-190, filed 12/27/90, effective 1/31/91. Statutory Authority: RCW 18.73.080. 82-19-080 (Order 1881), § 248-17-190, filed 9/21/82; Order 1150, § 248-17-190, filed 9/2/76.] Repealed by 93-01-148 (Order 323), filed 12/23/92, effective 1/23/93. Statutory Authority: RCW 43.70.040 and chapters 18.71, 18.73 and 70.168 RCW.

246-975-200 Advanced first aid training. [Statutory Authority: Chapter 18.73 RCW. 91-06-026 (Order 126), § 246-975-200, filed 2/26/91, effective 3/29/91. Statutory Authority: RCW 43.70.040. 91-02-049 (Order 121), recodified as § 246-975-200, filed 12/27/90, effective 1/31/91; Order 1150, § 248-17-200, filed 9/2/76.] Repealed by 93-01-148 (Order 323), filed 12/23/92, effective 1/23/93. Statutory Authority: RCW 43.70.040 and chapters 18.71, 18.73 and 70.168 RCW.

246-975-210 Basic life support—Emergency medical technician qualifications and training. [Statutory Authority: Chapter 18.73 RCW. 91-06-026 (Order 126), § 246-975-210, filed 2/26/91, effective 3/29/91. Statutory Authority: RCW 43.70.040. 91-02-049 (Order 121), recodified as § 246-975-210, filed 12/27/90, effective 1/31/91. Statutory Authority: RCW 18.73.080. 82-04-041 (Order 1752), § 248-17-211, filed 1/29/82.] Repealed by 93-01-148 (Order 323), filed 12/23/92, effective 1/23/93. Statutory Authority: RCW 43.70.040 and chapters 18.71, 18.73 and 70.168 RCW.

246-975-220 Emergency medical technician training—Course content, registration, and instructor qualifications. [Statutory Authority: Chapter 18.73 RCW. 91-06-026 (Order 126), § 246-975-220, filed 2/26/91, effective 3/29/91. Statutory Authority: RCW 43.70.040. 91-02-049 (Order 121), recodified as § 246-975-220, filed 12/27/90, effective 1/31/91. Statutory Authority: RCW 18.73.080. 84-17-036 (Order 2138), § 248-17-212, filed 8/10/84; 82-04-041 (Order 1752), § 248-17-212, filed 1/29/82.] Repealed by 93-01-148 (Order 323), filed 12/23/92, effective 1/23/93. Statutory Authority: RCW 43.70.040 and chapters 18.71, 18.73 and 70.168 RCW.

246-975-230 Emergency medical technician—Certification and recertification. [Statutory Authority: RCW 43.70.040. 91-02-049 (Order 121), recodified as § 246-975-230, filed 12/27/90, effective 1/31/91. Statutory Authority: RCW 18.73.081. 91-02-013, (Order 120), § 248-17-213, filed 12/21/90, effective 12/21/90. Statutory Authority: Chapter 18.73 RCW. 89-22-108 (Order 007), § 248-17-

213, filed 11/1/89, effective 12/2/89. Statutory Authority: RCW 18.73.080. 84-17-036 (Order 2138), § 248-17-213, filed 8/10/84; 82-19-080 (Order 1881), § 248-17-213, filed 9/21/82; 82-04-041 (Order 1752), § 248-17-213, filed 1/29/82.] Repealed by 93-01-148 (Order 323), filed 12/23/92, effective 1/23/93. Statutory Authority: RCW 43.70.040 and chapters 18.71, 18.73 and 70.168 RCW.

246-975-240 Emergency medical technician—Reciprocity and challenges. [Statutory Authority: Chapter 18.73 RCW. 91-06-026 (Order 126), § 246-975-240, filed 2/26/91, effective 3/29/91. Statutory Authority: RCW 43.70.040. 91-02-049 (Order 121), recodified as § 246-975-240, filed 12/27/90, effective 1/31/91. Statutory Authority: RCW 18.73.080. 84-17-036 (Order 2138), § 248-17-214, filed 8/10/84; 82-04-041 (Order 1752), § 248-17-214, filed 1/29/82.] Repealed by 93-01-148 (Order 323), filed 12/23/92, effective 1/23/93. Statutory Authority: RCW 43.70.040 and chapters 18.71, 18.73 and 70.168 RCW.

246-975-250 Emergency medical technician and first responder—Specialized training. [Statutory Authority: Chapter 18.73 RCW. 91-06-026 (Order 126), § 246-975-250, filed 2/26/91, effective 3/29/91. Statutory Authority: RCW 43.70.040. 91-02-049 (Order 121), recodified as § 246-975-250, filed 12/27/90, effective 1/31/91. Statutory Authority: RCW 18.73.080. 82-04-041 (Order 1752), § 248-17-215, filed 1/29/82.] Repealed by 93-01-148 (Order 323), filed 12/23/92, effective 1/23/93. Statutory Authority: RCW 43.70.040 and chapters 18.71, 18.73 and 70.168 RCW.

246-975-260 Emergency medical technician—Scope of care authorized—Prohibition. [Statutory Authority: RCW 43.70.040. 91-02-049 (Order 121), recodified as § 246-975-260, filed 12/27/90, effective 1/31/91. Statutory Authority: RCW 18.73.080. 82-04-041 (Order 1752), § 248-17-216, filed 1/29/82.] Repealed by 93-01-148 (Order 323), filed 12/23/92, effective 1/23/93. Statutory Authority: RCW 43.70.040 and chapters 18.71, 18.73 and 70.168 RCW.

246-975-270 Revocation, suspension or modification of certificate. [Statutory Authority: RCW 43.70.040. 91-02-049 (Order 121), recodified as § 246-975-270, filed 12/27/90, effective 1/31/91. Statutory Authority: RCW 18.73.080. 84-17-036 (Order 2138), § 248-17-220, filed 8/10/84; 82-19-080 (Order 1881), § 248-17-220, filed 9/21/82; Order 1150, § 248-17-220, filed 9/2/76.] Repealed by 93-01-148 (Order 323), filed 12/23/92, effective 1/23/93. Statutory Authority: RCW 43.70.040 and chapters 18.71, 18.73 and 70.168 RCW.

246-975-280 Notice of decision—Adjudicative proceeding. [Statutory Authority: RCW 43.70.040. 91-02-049 (Order 121), recodified as § 246-975-280, filed 12/27/90, effective 1/31/91. Statutory Authority: Chapter 34.05 RCW, RCW 34.05.220 (1)(a) and 1989 1st ex.s. c 9 § 106. 90-06-019 (Order 039), § 248-17-230, filed 2/28/90, effective 3/1/90; Order 1150, § 248-17-230, filed 9/2/76.] Repealed by 93-01-148 (Order 323), filed 12/23/92, effective 1/23/93. Statutory Authority: RCW 43.70.040 and chapters 18.71, 18.73 and 70.168 RCW.

246-975-290 Inspections and investigations. [Statutory Authority: RCW 43.70.040. 91-02-049 (Order 121), recodified as § 246-975-290, filed 12/27/90, effective 1/31/91; Order 1150, § 248-17-240, filed 9/2/76.] Repealed by 93-01-148 (Order 323), filed 12/23/92, effective 1/23/93. Statutory Authority: RCW 43.70.040 and chapters 18.71, 18.73 and 70.168 RCW.

246-975-300 First responder qualifications and training. [Statutory Authority: RCW 43.70.040. 91-02-049 (Order 121), recodified as § 246-975-300, filed 12/27/90, effective 1/31/91. Statutory Authority: RCW 18.73.080. 84-17-036 (Order 2138), § 248-17-250, filed 8/10/84.] Repealed by 93-01-148 (Order 323), filed 12/23/92, effective 1/23/93. Statutory Authority: RCW 43.70.040 and chapters 18.71, 18.73 and 70.168 RCW.

246-975-310 First responder training course contents, registration and instructor qualification. [Statutory Authority: RCW 43.70.040. 91-02-049 (Order 121), recodified as § 246-975-310, filed 12/27/90, effective 1/31/91. Statutory Authority: RCW 18.73.080. 84-17-036 (Order 2138), § 248-17-255, filed 8/10/84.] Repealed by 93-01-148 (Order 323), filed 12/23/92, effective 1/23/93. Statutory Authority: RCW 43.70.040 and chapters 18.71, 18.73 and 70.168 RCW.

246-975-320 First responder—Certification and recertification. [Statutory Authority: RCW 43.70.040. 91-02-049 (Order 121), recodified as § 246-975-320, filed 12/27/90, effective 1/31/91. Statutory Authority: Chapter 18.73 RCW. 89-22-108 (Order 007), § 248-17-260, filed 11/1/89, effective 12/2/89. Statutory Authority: RCW 18.73.-080. 84-17-036 (Order 2138), § 248-17-260, filed 8/10/84.] Repealed by 93-01-148 (Order 323), filed 12/23/92, effective 1/23/93. Statutory Authority: RCW 43.70.040 and chapters 18.71, 18.73 and 70.168 RCW.

246-975-330 Recertification—General requirements. [Statutory Authority: RCW 43.70.040. 91-02-049 (Order 121), recodified as § 246-975-330, filed 12/27/90, effective 1/31/91. Statutory Authority: Chapter 18.73 RCW. 89-22-108 (Order 007), § 248-17-261, filed 11/1/89, effective 12/2/89.] Repealed by 93-01-148 (Order 323), filed 12/23/92, effective 1/23/93. Statutory Authority: RCW 43.70.040 and chapters 18.71, 18.73 and 70.168 RCW.

246-975-340 First responder—Reciprocity, challenges and reinstatement. [Statutory Authority: RCW 43.70.040. 91-02-049 (Order 121), recodified as § 246-975-340, filed 12/27/90, effective 1/31/91. Statutory Authority: RCW 18.73.080. 84-17-036 (Order 2138), § 248-17-265, filed 8/10/84.] Repealed by 93-01-148 (Order 323), filed 12/23/92, effective 1/23/93. Statutory Authority: RCW 43.70.040 and chapters 18.71, 18.73 and 70.168 RCW.

246-975-350 First responder—Scope of care authorized, prohibited. [Statutory Authority: RCW 43.70.040. 91-02-049 (Order 121), recodified as § 246-975-350, filed 12/27/90, effective 1/31/91. Statutory Authority: RCW 18.73.080. 84-17-036 (Order 2138), § 248-17-270, filed 8/10/84.] Repealed by 93-01-148 (Order 323), filed 12/23/92, effective 1/23/93. Statutory Authority: RCW 43.70.040 and chapters 18.71, 18.73 and 70.168 RCW.

246-975-360 First responder—Revocation or suspension of certificate. [Statutory Authority: RCW 43.70.040. 91-02-049 (Order 121), recodified as § 246-975-360, filed 12/27/90, effective 1/31/91. Statutory Authority: RCW 18.73.080. 84-17-036 (Order 2138), § 248-17-275, filed 8/10/84.] Repealed by 93-01-148 (Order 323), filed 12/23/92, effective 1/23/93. Statutory Authority: RCW 43.70.040 and chapters 18.71, 18.73 and 70.168 RCW.

246-975-990 Ambulances and first-aid vehicles licensing and inspection fees. [Statutory Authority: RCW 43.70.040. 91-02-049 (Order 121), recodified as § 246-975-990, filed 12/27/90, effective 1/31/91. Statutory Authority: RCW 43.20B.110. 89-16-064 (Order 2839), § 440-44-023, filed 7/31/89, effective 8/31/89. Statutory Authority: 1982 c 201. 82-13-011 (Order 1825), § 440-44-023, filed 6/4/82.] Repealed by 93-01-148 (Order 323), filed 12/23/92, effective 1/23/93. Statutory Authority: RCW 43.70.040 and chapters 18.71, 18.73 and 70.168 RCW.

Chapter 246-977
ADVANCED LIFE SUPPORT TECHNICIANS

246-977-001 Declaration of purpose. [Statutory Authority: RCW 43.70.040. 91-02-049 (Order 121), recodified as § 246-977-001, filed 12/27/90, effective 1/31/91. Statutory Authority: RCW 18.71.205. 78-09-055 (Order 1329), § 248-15-010, filed 8/22/78.] Repealed by 93-01-148 (Order 323), filed 12/23/92, effective 1/23/93. Statutory Authority: RCW 43.70.040 and chapters 18.71, 18.73 and 70.168 RCW.

246-977-010 Definitions. [Statutory Authority: RCW 43.70.040. 91-02-049 (Order 121), recodified as § 246-977-010, filed 12/27/90, effective 1/31/91. Statutory Authority: RCW 18.71.205. 87-19-025 (Order 2532), § 248-15-020, filed 9/10/87; 84-17-035 (Order 2137), § 248-15-020, filed 8/10/84; 81-23-016 (Order 1718), § 248-15-020, filed 11/12/81; 78-09-055 (Order 1329), § 248-15-020, filed 8/22/78.] Repealed by 93-01-148 (Order 323), filed 12/23/92, effective 1/23/93. Statutory Authority: RCW 43.70.040 and chapters 18.71, 18.73 and 70.168 RCW.

246-977-020 Medical program director. [Statutory Authority: RCW 43.70.040. 91-02-049 (Order 121), recodified as § 246-977-020, filed 12/27/90, effective 1/31/91. Statutory Authority: RCW 18.71.205. 87-19-025 (Order 2532), § 248-15-025, filed 9/10/87.] Repealed by 93-01-148 (Order 323), filed 12/23/92, effective 1/23/93. Statutory Authority: RCW 43.70.040 and chapters 18.71, 18.73 and 70.168 RCW.

246-977-030 Physician's trained mobile intravenous therapy technician—Airway management technician—Mobile intensive care paramedic, selection, general training, and

knowledge standards. [Statutory Authority: RCW 43.70.040. 91-02-049 (Order 121), recodified as § 246-977-030, filed 12/27/90, effective 1/31/91. Statutory Authority: RCW 18.71.205. 84-17-035 (Order 2137), § 248-15-030, filed 8/10/84; 81-23-016 (Order 1718), § 248-15-030, filed 11/12/81; 78-09-055 (Order 1329), § 248-15-030, filed 8/22/78.] Repealed by 93-01-148 (Order 323), filed 12/23/92, effective 1/23/93. Statutory Authority: RCW 43.70.040 and chapters 18.71, 18.73 and 70.168 RCW.

246-977-040 Physician's trained mobile IV therapy technician—Training and knowledge standards. [Statutory Authority: RCW 43.70.040. 91-02-049 (Order 121), recodified as § 246-977-040, filed 12/27/90, effective 1/31/91. Statutory Authority: RCW 18.71.205. 89-06-003 (Order 2764), § 248-15-040, filed 2/16/89; 78-09-055 (Order 1329), § 248-15-040, filed 8/22/78.] Repealed by 93-01-148 (Order 323), filed 12/23/92, effective 1/23/93. Statutory Authority: RCW 43.70.040 and chapters 18.71, 18.73 and 70.168 RCW.

246-977-050 Physician's trained mobile airway management technician—Training and knowledge standards. [Statutory Authority: RCW 43.70.040. 91-02-049 (Order 121), recodified as § 246-977-050, filed 12/27/90, effective 1/31/91. Statutory Authority: RCW 18.71.205. 89-06-003 (Order 2764), § 248-15-050, filed 2/16/89; 81-23-016 (Order 1718), § 248-15-050, filed 11/12/81; 78-09-055 (Order 1329), § 248-15-050, filed 8/22/78.] Repealed by 93-01-148 (Order 323), filed 12/23/92, effective 1/23/93. Statutory Authority: RCW 43.70.040 and chapters 18.71, 18.73 and 70.168 RCW.

246-977-060 Physician's trained mobile intensive care paramedic—Training and knowledge standards. [Statutory Authority: RCW 43.70.040. 91-02-049 (Order 121), recodified as § 246-977-060, filed 12/27/90, effective 1/31/91. Statutory Authority: RCW 18.71.205. 78-09-055 (Order 1329), § 248-15-060, filed 8/22/78.] Repealed by 93-01-148 (Order 323), filed 12/23/92, effective 1/23/93. Statutory Authority: RCW 43.70.040 and chapters 18.71, 18.73 and 70.168 RCW.

246-977-070 Testing. [Statutory Authority: RCW 43.70.040. 91-02-049 (Order 121), recodified as § 246-977-070, filed 12/27/90, effective 1/31/91. Statutory Authority: RCW 18.71.205. 78-09-055 (Order 1329), § 248-15-070, filed 8/22/78.] Repealed by 93-01-148 (Order 323), filed 12/23/92, effective 1/23/93. Statutory Authority: RCW 43.70.040 and chapters 18.71, 18.73 and 70.168 RCW.

246-977-080 Certification and recertification. [Statutory Authority: RCW 43.70.040. 91-02-049 (Order 121), recodified as § 246-977-080, filed 12/27/90, effective 1/31/91. Statutory Authority: RCW 18.71.205. 84-17-035 (Order 2137), § 248-15-080, filed 8/10/84; 81-23-016 (Order 1718), § 248-15-080, filed 11/12/81; 78-09-055 (Order 1329), § 248-15-080, filed 8/22/78.] Repealed by 93-01-148 (Order 323), filed 12/23/92, effective 1/23/93. Statutory Authority: RCW 43.70.040 and chapters 18.71, 18.73 and 70.168 RCW.

246-977-090 Certification of individuals who have not completed a training course conducted by approved training physicians in the state of Washington. [Statutory Authority: RCW 43.70.040. 91-02-049 (Order 121), recodified as § 246-977-090, filed 12/27/90, effective 1/31/91. Statutory Authority: RCW 18.71.205. 81-23-016 (Order 1718), § 248-15-091, filed 11/12/81.] Repealed by 93-01-148 (Order 323), filed 12/23/92, effective 1/23/93. Statutory Authority: RCW 43.70.040 and chapters 18.71, 18.73 and 70.168 RCW.

246-977-100 Revocation, suspension or modification of certificate. [Statutory Authority: RCW 43.70.040. 91-02-049 (Order 121), recodified as § 246-977-100, filed 12/27/90, effective 1/31/91. Statutory Authority: RCW 18.71.205. 84-17-035 (Order 2137), § 248-15-100, filed 8/10/84; 78-09-055 (Order 1329), § 248-15-100, filed 8/22/78.] Repealed by 93-01-148 (Order 323), filed 12/23/92, effective 1/23/93. Statutory Authority: RCW 43.70.040 and chapters 18.71, 18.73 and 70.168 RCW.

246-977-110 Notice of decision—Adjudicative proceeding. [Statutory Authority: RCW 43.70.040. 91-02-049 (Order 121), recodified as § 246-977-110, filed 12/27/90, effective 1/31/91. Statutory Authority: Chapter 34.05 RCW, RCW 34.05.220 (1)(a) and 18.71.205. 90-06-019 (Order 039), § 248-15-110, filed 2/28/90, effective 3/1/90. Statutory Authority: RCW 18.71.205. 78-09-055 (Order 1329), § 248-15-110, filed 8/22/78.] Repealed by 93-01-148 (Order 323), filed 12/23/92, effective 1/23/93. Statutory Authority: RCW 43.70.040 and chapters 18.71, 18.73 and 70.168 RCW.

Chapter 246-01 WAC
DESCRIPTION AND ORGANIZATION

WAC

246-01-001 Purpose and authority.
246-01-010 Definitions.
246-01-020 Functions.
246-01-030 Secretary.
246-01-050 Department and state board of health—Relationship.
246-01-060 Department and local health departments/districts—Relationship.
246-01-080 Organization.
246-01-090 Consumer assistance.

DISPOSITION OF SECTIONS FORMERLY CODIFIED IN THIS CHAPTER

246-01-040 Department and professional boards—Relationship. [Statutory Authority: RCW 43.70.040. 95-10-043, § 246-01-040, filed 5/1/95, effective 6/1/95. Statutory Authority: RCW 43.70.050. 93-08-004 (Order 346), § 246-01-040, filed 3/24/93, effective 4/24/93.] Repealed by 03-11-032, filed 5/15/03, effective 6/15/03. Statutory Authority: Chapter 43.70 RCW, RCW 34.05.220, 42.17.250.

246-01-070 Department and health professions resource committee—Relationship. [Statutory Authority: RCW 43.70.-050. 93-08-004 (Order 346), § 246-01-070, filed 3/24/93, effective 4/24/93.] Repealed by 03-11-032, filed 5/15/03, effective 6/15/03. Statutory Authority: Chapter 43.70 RCW, RCW 34.05.220, 42.17.250.

246-01-100 Current address. [Statutory Authority: RCW 43.70.050. 93-08-004 (Order 346), § 246-01-100, filed 3/24/93, effective 4/24/93.] Repealed by 03-11-032, filed 5/15/03, effective 6/15/03. Statutory Authority: Chapter 43.70 RCW, RCW 34.05.220, 42.17.250.

WAC 246-01-001 Purpose and authority. The purpose of this chapter is to describe the department of health and the general course and method of its operations. This chapter is adopted under RCW 34.05.220 and 42.17.250, and chapter 43.70 RCW.

[Statutory Authority: Chapter 43.70 RCW, RCW 34.05.220, 42.17.250. 03-11-032, § 246-01-001, filed 5/15/03, effective 6/15/03. Statutory Authority: RCW 43.70.050. 93-08-004 (Order 346), § 246-01-001, filed 3/24/93, effective 4/24/93.]

WAC 246-01-010 Definitions. As used in this chapter:

(1) "Department" means the department of health.

(2) "Secretary" means the secretary of the department of health or the secretary's designee.

[Statutory Authority: RCW 43.70.050. 93-08-004 (Order 346), § 246-01-010, filed 3/24/93, effective 4/24/93.]

WAC 246-01-020 Functions. The department balances its three core functions to accomplish its mission:

(1) Assessment. To regularly assess state health needs and resources, the department shall:

(a) Collect data on health status, personal health services, and the environment;

(b) Address major health problems in the state or community and population groups at greatest risk; availability and quality of service; resource availability; and the primary concerns of both citizens and providers; and

(c) Make budget and program revisions based on this assessment.

(2) Policy development. To develop and implement sound public policy, the department includes:

(a) Knowledge gained from assessment;

(b) Consideration of the political, organizational, and community environments;

(c) Citizen participation; and

(d) Cooperation with the state board of health and other state and local agencies.

(3) Assurance. To ensure the capacity of public health agencies to manage day-to-day operations and to respond to public health emergencies, the department shall:

(a) Provide direct support when costs to replicate services in each local area would be prohibitive;

(b) Provide technical assistance when services can be provided more effectively by local health agencies; and

(c) Provide quality service.

[Statutory Authority: RCW 43.70.050. 93-08-004 (Order 346), § 246-01-020, filed 3/24/93, effective 4/24/93.]

WAC 246-01-030 Secretary. (1) The secretary is appointed by, and serves at the pleasure of, the governor. In addition to other powers, the secretary may:

(a) Adopt rules;

(b) Appoint advisory committees on areas of emerging concern;

(c) Undertake studies, research, and analyses;

(d) Delegate powers, duties, and functions;

(e) Enter into contracts on behalf of the department; and

(f) Act for the state in the initiation of, or the participation in, intergovernmental programs.

(2) In case of the absence or disability of the secretary, or in case the office of secretary becomes vacant, the deputy secretary shall have full charge and supervision of the department and shall have the same power and authority to act as the secretary.

(3) In the case of the absence or disability of the secretary and the deputy secretary, the person designated "acting secretary" shall have the same power and authority to act as the secretary. If no person has been so designated, then the power to act as acting secretary shall be vested in any of the assistant secretaries designated in WAC 246-01-080, in the order in which they are listed therein.

[Statutory Authority: RCW 43.70.050. 93-08-004 (Order 346), § 246-01-030, filed 3/24/93, effective 4/24/93.]

WAC 246-01-050 Department and state board of health—Relationship. (1) The secretary serves as a member of the state board of health.

(2) The state board of health may advise the secretary on health policy issues pertaining to the department and the state.

(3) The state board of health has statutory authority to adopt rules to protect the public health, and may delegate this authority to the secretary and rescind such delegated authority.

(4) The department enforces the rules, regulations, and orders of the state board of health.

[Statutory Authority: RCW 43.70.050. 93-08-004 (Order 346), § 246-01-050, filed 3/24/93, effective 4/24/93.]

WAC 246-01-060 Department and local health departments/districts—Relationship. (1) The department works with local health departments/districts in partnership to promote public health.

(2) The department provides notification of outbreaks and epidemics of disease that may occur and advises local departments/districts of the measures necessary to prevent and control such outbreaks and epidemics.

(3) Upon the request of a local health officer, the department may take legal action to enforce public health laws, rules, and regulations of the state board of health or local rules and regulations within the jurisdiction served by the local health department, and may institute any civil legal proceeding authorized by state law.

[Statutory Authority: RCW 43.70.050. 93-08-004 (Order 346), § 246-01-060, filed 3/24/93, effective 4/24/93.]

WAC 246-01-080 Organization. (1) DOH exists to protect and improve the health of the people of Washington. The department shares this mission with three primary partners:

(a) Professional boards, commissions, and committees, which have varying degrees of statutory authority, ranging from advisory powers to rule adoptions and disciplinary powers;

(b) The state board of health which has statutory authority to adopt rules to protect the public health, and may delegate this authority to the secretary and rescind the delegated authority; and

(c) Local health jurisdictions throughout the state.

(2) DOH is organized into four health services divisions as noted in this subsection plus the secretary's office, information resource management office, financial services office, and other administrative offices necessary to carry out the goals expressed in RCW 43.70.020(2):

(a) Community and family health;

(b) Environmental health;

(c) Epidemiology, health statistics and public health laboratories; and

(d) Health systems quality assurance.

(3) DOH maintains offices in Kent, Tumwater, Richland, Shoreline and Spokane. These offices are not complete service locations and are not required to keep complete policy manuals and other records available for public inspection.

[Statutory Authority: RCW 43.70.040, 43.70.050, 34.05.220, 42.17.250, 70.02.005. 06-11-056, § 246-01-080, filed 5/11/06, effective 6/11/06. Statutory Authority: Chapter 43.70 RCW, RCW 34.05.220, 42.17.250. 03-11-032, § 246-01-080, filed 5/15/03, effective 6/15/03. Statutory Authority: RCW 43.70.040. 95-10-043, § 246-01-080, filed 5/1/95, effective 6/1/95. Statutory Authority: RCW 43.70.050. 93-08-004 (Order 346), § 246-01-080, filed 3/24/93, effective 4/24/93.]

WAC 246-01-090 Consumer assistance. (1) The department provides a consumer assistance statewide toll-free hotline. Consumer assistance personnel assist the public with information, concerns, or complaints about the department and serve as advocates for consumers who are complainants or witnesses in a licensing or disciplinary proceeding. The health consumer assistance line is 1-800-525-0127; its mailing address is P.O. Box 47890, Olympia, WA 98504-7890.

(2) Individuals may contact the department to obtain or submit information, or make requests by:

(a) Writing to the department at Department of Health, P.O. Box 47890, Olympia, WA 98504-7890; or

(b) Visiting the department's web site at: http://doh.wa.gov.

[Statutory Authority: Chapter 43.70 RCW, RCW 34.05.220, 42.17.250. 03-11-032, § 246-01-090, filed 5/15/03, effective 6/15/03. Statutory Authority: RCW 43.70.050. 93-08-004 (Order 346), § 246-01-090, filed 3/24/93, effective 4/24/93.]

Chapter 246-03 WAC

STATE ENVIRONMENTAL POLICY ACT—GUIDELINES

WAC

246-03-001 Purpose.
246-03-010 Definitions.
246-03-020 Adoption by reference.
246-03-030 Timing and procedures for specified major actions.
246-03-040 Exemptions for emergency actions.
246-03-050 Determination of lead agency and responsible official.
246-03-060 Recommended timing for threshold determination.
246-03-070 Threshold determination process.
246-03-080 Adjudicative proceeding.
246-03-090 Scoping.
246-03-100 Issuance of draft EIS.
246-03-110 Policies and procedures for conditioning or denying permits or other approvals.
246-03-120 Public hearings.
246-03-130 Responsibilities of the department as a consulted agency.
246-03-140 SEPA committee.
246-03-150 SEPA public information.
246-03-160 Severability.

WAC 246-03-001 Purpose. This chapter implements the statewide rules in chapter 197-11 WAC as they apply to the department of health. These rules are promulgated under RCW 43.21C.120 (the State Environmental Policy Act) and chapter 197-11 WAC (SEPA rules).

[Statutory Authority: RCW 43.70.040. 91-02-050 (Order 122), § 246-03-001, filed 12/27/90, effective 1/31/91.]

WAC 246-03-010 Definitions. In addition to the definitions contained in WAC 197-11-700 through 197-11-799, the following terms shall have the listed meanings:

Acting agency means an agency with jurisdiction which has received an application for a license, or which is proposing an action.

Agency guidelines shall mean chapter 246-03 WAC.

Department shall mean the department of health.

Environmental report shall mean a document prepared by the applicant, when required by the department, for use in the preparation of a draft EIS.

Licensing means the agency process in granting, renewing or modifying a license.

Private applicant means any person or entity, other than an agency as defined in this section, applying for a license from an agency.

Secretary shall mean the secretary of the department of health.

SEPA committee means the departmental committee which oversees the department's SEPA activities. The committee's composition and responsibilities are outlined in WAC 246-03-140.

SEPA guidelines shall mean chapter 197-11 WAC.

[Statutory Authority: RCW 43.70.040. 91-02-050 (Order 122), § 246-03-010, filed 12/27/90, effective 1/31/91.]

WAC 246-03-020 Adoption by reference. The department of health adopts the following sections or subsections of chapter 197-11 WAC by reference:

WAC

197-11-010 Authority.
197-11-020 Purpose.
197-11-030 Policy.
197-11-040 Definitions.
197-11-050 Lead agency.
197-11-055 Timing of the SEPA process.
197-11-060 Content of environmental review.
197-11-070 Limitations on actions during SEPA process.
197-11-080 Incomplete or unavailable information.
197-11-090 Supporting documents.
197-11-100 Information required of applicants.
197-11-300 Purpose of this part.
197-11-305 Categorical exemptions.
197-11-310 Threshold determination required.
197-11-315 Environmental checklist.
197-11-330 Threshold determination process.
197-11-335 Additional information.
197-11-340 Determination of nonsignificance (DNS).
197-11-350 Mitigated DNS.
197-11-360 Determination of significance (DS)/initiation of scoping.
197-11-390 Effect of threshold determination.
197-11-400 Purpose of EIS.
197-11-402 General requirements.
197-11-405 EIS types.
197-11-406 EIS timing.
197-11-408 Scoping.
197-11-410 Expanded scoping. (Optional)
197-11-420 EIS preparation.
197-11-425 Style and size.
197-11-430 Format.
197-11-435 Cover letter or memo.
197-11-440 EIS contents.
197-11-442 Contents of EIS on nonproject proposals.
197-11-443 EIS contents when prior nonproject EIS.
197-11-444 Elements of the environment.
197-11-448 Relationship of EIS to other considerations.
197-11-450 Cost-benefit analysis.
197-11-455 Issuance of DEIS.
197-11-460 Issuance of FEIS.
197-11-500 Purpose of this part.
197-11-502 Inviting comment.
197-11-504 Availability and cost of environmental documents.
197-11-508 SEPA register.
197-11-510 Public notice.
197-11-535 Public hearings and meetings.
197-11-545 Effect of no comment.
197-11-550 Specificity of comments.
197-11-560 FEIS response to comments.
197-11-570 Consulted agency costs to assist lead agency.

WAC
197-11-600 When to use existing environmental documents.
197-11-610 Use of NEPA documents.
197-11-620 Supplemental environmental impact statement—Procedures.
197-11-625 Addenda—Procedures.
197-11-630 Adoption—Procedures.
197-11-635 Incorporation by reference—Procedures.
197-11-640 Combining documents.
197-11-650 Purpose of this part.
197-11-655 Implementation.
197-11-660 Substantive authority and mitigation.
197-11-680 Appeals.
197-11-700 Definitions.
197-11-702 Act.
197-11-704 Action.
197-11-706 Addendum.
197-11-708 Adoption.
197-11-710 Affected tribe.
197-11-712 Affecting.
197-11-714 Agency.
197-11-716 Applicant.
197-11-718 Built environment.
197-11-720 Categorical exemption.
197-11-722 Consolidated appeal.
197-11-724 Consulted agency.
197-11-726 Cost-benefit analysis.
197-11-728 County/city.
197-11-730 Decision maker.
197-11-732 Department.
197-11-734 Determination of nonsignificance (DNS).
197-11-736 Determination of significance (DS).
197-11-738 EIS.
197-11-740 Environment.
197-11-742 Environmental checklist.
197-11-744 Environmental document.
197-11-746 Environmental review.
197-11-748 Environmentally sensitive area.
197-11-750 Expanded scoping.
197-11-752 Impacts.
197-11-754 Incorporation by reference.
197-11-756 Lands covered by water.
197-11-758 Lead agency.
197-11-760 License.
197-11-762 Local agency.
197-11-764 Major action.
197-11-766 Mitigated DNS.
197-11-768 Mitigation.
197-11-770 Natural environment.
197-11-772 NEPA.
197-11-774 Nonproject.
197-11-776 Phased review.
197-11-778 Preparation.
197-11-780 Private project.
197-11-782 Probable.
197-11-784 Proposal.
197-11-786 Reasonable alternative.
197-11-788 Responsible official.
197-11-790 SEPA.
197-11-792 Scope.

WAC
197-11-793 Scoping.
197-11-794 Significant.
197-11-796 State agency.
197-11-797 Threshold determination.
197-11-799 Underlying governmental action.
197-11-800 Categorical exemptions.
197-11-810 Exemptions and nonexemptions applicable to specific state agencies.
197-11-820 Department of licensing.
197-11-845 Department of social and health services.
197-11-880 Emergencies.
197-11-890 Petitioning DOE to change exemptions.
197-11-900 Purpose of this part.
197-11-902 Agency SEPA policies.
197-11-904 Agency SEPA procedures.
197-11-906 Content and consistency of agency procedures.
197-11-908 Environmentally sensitive areas.
197-11-910 Designation of responsible official.
197-11-912 Procedures on consulted agencies.
197-11-914 SEPA fees and costs.
197-11-916 Application to ongoing actions.
197-11-917 Relationship to chapter 197-10 WAC.
197-11-918 Lack of agency procedures.
197-11-920 Agencies with environmental expertise.
197-11-922 Lead agency rules.
197-11-924 Determining the lead agency.
197-11-926 Lead agency for governmental proposals.
197-11-928 Lead agency for public and private proposals.
197-11-930 Lead agency for private projects with one agency with jurisdiction.
197-11-932 Lead agency for private projects requiring licenses from more than one agency, when one of the agencies is a county/city.
197-11-934 Lead agency for private projects requiring licenses from a local agency, not a county/city, and one or more state agencies.
197-11-936 Lead agency for private projects requiring licenses from more than one state agency.
197-11-938 Lead agencies for specific proposals.
197-11-940 Transfer of lead agency status to a state agency.
197-11-942 Agreements on lead agency status.
197-11-944 Agreements on division of lead agency duties.
197-11-946 DOE resolution of lead agency disputes.
197-11-948 Assumption of lead agency status.
197-11-950 Severability.
197-11-955 Effective date.
197-11-960 Environmental checklist.
197-11-965 Adoption notice.
197-11-970 Determination of nonsignificance (DNS).
197-11-980 Determination of significance and scoping notice (DS).
197-11-985 Notice of assumption of lead agency status.
197-11-990 Notice of action.

[Statutory Authority: RCW 43.70.040. 91-02-050 (Order 122), § 246-03-020, filed 12/27/90, effective 1/31/91.]

WAC 246-03-030 Timing and procedures for specified major actions. (1) **Regulations and licenses relating to radioactive material.**

(a) Scope of major action.

(i) Regulations relating to radioactive material shall include the adoption or amendment by the department of any regulations incorporating general standards for issuance of licenses authorizing the possession, use and transfer of radioactive material pursuant to RCW 70.98.080, and 70.121.030.

(ii) The issuance, revocation or suspension of individual licenses under RCW 70.98.080 shall be exempt. However, the following licenses shall not be exempt: Licenses to operate low level waste burial facilities or licenses to operate or expand beyond design capacity mineral processing facilities, or their tailings areas, whose products, or byproducts, have concentrations of naturally occurring radioactive materials in excess of exempt concentrations as specified in WAC 246-232-010.

(b) Timing of SEPA requirements for regulations for radioactive material.

(i) A final EIS or determination of nonsignificance, whichever is determined appropriate by the lead agency's responsible official, shall be completed for proposed regulations relating to radioactive material prior to the hearing preceding final adoption of such regulations.

(ii) The responsible official shall mail to the department of ecology headquarters office in Olympia for listing in the "SEPA register" (see WAC 197-11-508) a copy of any determination of nonsignificance, a copy of the draft EIS, and a copy of the final EIS. Copies of the draft EIS shall also be mailed to those agencies identified in WAC 197-11-455, and of the final EIS to those agencies identified in WAC 197-11-460. The responsible official shall also give public notice in the form and manner specified in RCW 43.21C.080 of the determination of nonsignificance or final EIS.

(c) Timing of SEPA requirements for licenses for uranium or thorium mills or radioactive waste burial facilities.

(i) The applicant shall be responsible for completing an environmental checklist, furnishing additional information needed by the department to make the threshold determination, and preparing an environmental report regarding the environmental impact of proposed activities for independent evaluation by the department, prior to issuance of a draft EIS by the responsible official. The environmental report shall be submitted within ninety days following determination of significance. The following material presents a more detailed description of the responsibilities of the private applicant as well as of the responsible official.

(ii) The applicant shall be responsible for contacting the responsible official during the early stages of the applicants planning activities to obtain an outline of SEPA requirements.

(iii) Thereafter the private applicant shall be responsible for preparation of an environmental checklist. The responsible official shall review each environmental checklist and, within fifteen days of the responsible official's receipt of the checklist, shall prepare and issue either a determination of nonsignificance as per WAC 197-11-340 or a determination of significance as per WAC 197-11-360.

(iv) When the responsible official has issued a determination of nonsignificance, the official shall send the determination and environmental checklist to the applicant and to all agencies with jurisdiction for review and comment as per WAC 197-11-340.

(v) When the responsible official makes a determination of significance, the preparation of an environmental report shall be completed in a manner consistent with the requirements for a draft EIS and shall be the responsibility of the private applicant. If the applicant desires, he may contract with an outside consultant for the preparation of the environmental report. The department may also contract with an outside consultant for the preparation of a draft or final EIS. The department or the department's contracted consultant will independently evaluate the environmental report and be responsible for the reliability of any information used in the draft or final EIS. Unless the scope or complexity of the proposal indicates otherwise, the final EIS shall be issued as described in WAC 197-11-460(6).

(vi) The responsible official shall request review of the draft EIS from the agencies listed in WAC 197-11-455 and from such other agencies as he determines.

(vii) The responsible official shall mail a copy of the draft EIS to the department of ecology headquarters in Olympia for listing in the "SEPA register" (see WAC 197-11-508) and also to those agencies listed in WAC 197-11-455.

(viii) When the responsible official determines that substantial changes are needed or that new information has become available, the preparation of an amended or new environmental report is the responsibility of the private applicant.

(ix) The responsible official shall mail a copy of the final EIS to the department of ecology headquarters office in Olympia for listing in the "SEPA register" (see WAC 197-11-508). The responsible official shall also mail copies of the final EIS to those agencies specified in WAC 197-11-460 and shall give public notice of the completion of the final EIS in the form and manner specified in RCW 43.21C.080.

(2) **Water system plans for public water systems as per WAC 246-290-100 and RCW 70.116.050.**

(a) Scope of major action. Water system plans are plans developed and submitted to the department for review and approval pursuant to WAC 246-290-100 and RCW 70.116.050.

(b) Timing and procedures for water system plans prepared by private applicants.

(i) In general, when a private applicant has prepared a water system plan for review and approval by the department, the private applicant shall be responsible for completing an environmental checklist, furnishing additional information needed by the department to make the threshold determination, and preparing the draft and final EIS under the direction of the responsible official. The following material presents a more detailed description of the responsibilities of the private applicant as well as the responsible official.

(ii) Follow steps outlined in subsection (1)(c)(ii) through (iv) of this section.

(iii) When the responsible official makes a determination of significance, the preparation of a draft and final EIS shall be in compliance with WAC 197-11-400 through 197-11-620 and shall be the responsibility of the private applicant. If the applicant desires, he may contract with an outside consultant for preparation of the draft or final EIS. Unless the scope or

complexity of the proposal indicates otherwise, the final EIS shall be completed within sixty days of the end of the comment period for the draft EIS.

(iv) See subsection (1)(c)(vi) and (vii) of this section.

(v) When the responsible official determines that substantial changes are needed or that new information has become available, the preparation of an amended or a new draft EIS is the responsibility of the private applicant.

(vi) See subsection (1)(c)(ix) of this section.

(vii) Every water system plan submitted by a private applicant to the department for review and approval shall be accompanied by either a determination of nonsignificance or a final EIS.

(c) Timing and procedure for water system plans prepared by agencies. Every water system plan submitted by an agency to the department for review and approval shall be accompanied by either a determination of nonsignificance or a final EIS.

(3) **New public water supply systems and major extensions of existing public water supply systems.**

(a) Scope of major action. The approval of engineering reports or plans and specifications pursuant to chapter 246-290 WAC for all surface water source development, all water system storage facilities greater than one-half million gallons, new transmission lines longer than one thousand feet and larger than eight inches in diameter located in new rights of way and major extensions to existing water distribution systems involving use of pipes greater than eight inches in diameter, which are designed to increase the existing service area by more than one square mile.

(b) Timing and procedures for projects proposed by private applicants.

(i) In general, when a private applicant seeks the approval of the department for a new public water supply or a major extension to an existing public water supply, the private applicant shall be responsible for completing an environmental checklist, furnishing additional information needed by the department to make the threshold determination, and preparing the draft and final EIS under the direction of the responsible official. The following material presents a more detailed description of the responsibilities of the private applicant as well as of the responsible official.

(ii) Follow steps outlined in subsection (1)(c)(ii) through (iv) of this section.

(iii) See subsection (2)(b)(iii) of this section.

(iv) See subsection (1)(c)(vi) and (vii) of this section.

(v) See subsection (2)(b)(v) of this section.

(vi) See subsection (1)(c)(ix) of this section.

(vii) Whenever preliminary engineering reports, or plans and specifications for a new public water supply system or a major extension to an existing public water supply system are submitted by a private applicant to the secretary for review and approval pursuant to chapter 246-290 WAC, these reports, plans and specifications shall be accompanied by a determination of nonsignificance or a final EIS.

(c) Timing and procedures for projects proposed by an agency. Whenever preliminary engineering reports, plans and specifications for a new public water supply system or a major extension to an existing public water supply system are submitted by an agency to the secretary for review and approval pursuant to chapter 246-290 WAC, these reports, plans and specifications shall be accompanied by a determination of nonsignificance or a final EIS.

(4) **Certificates of need.**

(a) Scope of major action. Certificate of need applications are subject to SEPA requirements whenever the applicant proposes to construct a new hospital or to construct major additions to the existing service capacity of such an institution: Provided, That such applications are not subject to SEPA requirements when the proposed construction consists of additions which provide less than twelve thousand square feet of floor area and with associated parking facilities designed for forty automobiles or less: Provided further, That certificate of need applications for "substantial acquisitions" are not subject to SEPA requirements.

(b) Timing and procedures for hospital certificates of need. Where a state or local agency other than the department is lead agency for hospital construction, the department shall not issue a certificate of need approving this hospital construction until the applicant has supplied it with a determination of nonsignificance or a final EIS, and until seven days after the issuance by the lead agency of any final EIS. Nothing in this subsection shall preclude the department from making a commitment to issue a certificate of need to an applicant subject to the timely receipt of an appropriate environmental impact statement or determination of nonsignificance.

(5) **Approval of sewerage general plans and/or water general plans described in RCW 36.94.010.**

(a) Scope of major action. Sewerage general plans and water general plans shall mean and include those described in RCW 36.94.010.

(b) Timing and procedures for water general plans. Every water general plan submitted by a county to the department for review and approval shall be accompanied by either a determination of nonsignificance or a final EIS.

(6) **Plans and specifications for new sewage treatment works or for major extensions to existing sewage treatment works pursuant to chapter 246-271 WAC.**

Scope of major action. Plans and specifications for new sewage treatment works or for major extensions to existing sewage treatment works are those which are reviewed and approved by the department pursuant to WAC 246-271-050.

(7) **Construction of any building, facility or other installation for the purpose of housing department personnel or for prisons or for fulfilling other statutorily directed or authorized functions.**

(a) Scope of major action. The construction of buildings, facilities or other installations for the purpose of housing department personnel or for other authorized functions shall be subject to SEPA requirements, but such construction shall not be subject to SEPA requirements when it consists of additions which provide less than twelve thousand square feet of floor area and with associated parking facilities designed for forty automobiles or less.

(b) Timing and procedures.

(i) The responsible official shall, prior to the request for construction bids, prepare an environmental checklist for each construction project of the type described in (a) of this subsection.

(ii) Within fifteen days of the request for construction bids, the responsible official shall make (A) a written decla-

ration of nonsignificance where the responsible official determines that the proposed construction will not have a significant adverse environmental impact or (B) a written declaration of significance where the responsible official determines that the proposed construction will have a significant adverse environmental impact.

(iii) Where the responsible official has made a determination of significance, the preparation of the draft and final EIS shall be in compliance with WAC 197-11-400 through 197-11-620, and shall be the responsibility of the responsible official. Unless the scope or complexity of the proposal indicates otherwise, the final EIS shall be completed within sixty days of the end of the comment period for the draft EIS.

(iv) See subsection (1)(c)(vi) of this section.

(v) The responsible official shall mail to the department of ecology headquarters office in Olympia for listing in the "SEPA register" a copy of any determination of nonsignificance, a copy of the draft EIS, and a copy of the final EIS. Copies of the draft EIS shall also be mailed to those agencies identified in WAC 197-11-455, and of the final EIS to those agencies identified in WAC 197-11-460. The responsible official shall also give public notice in the form and manner specified in RCW 43.21C.080 of the determination of nonsignificance or final EIS.

(8) **Approval of final plans for construction of a private psychiatric hospital pursuant to WAC 246-322-020, or construction of an alcoholism treatment facility pursuant to WAC 246-326-020.**

(a) Scope of major action. The approval of final plans for construction of a private psychiatric hospital pursuant to WAC 246-322-020, or construction of an alcoholism treatment center pursuant to WAC 246-326-020 shall be subject to SEPA requirements: Provided, That such construction shall not be subject to SEPA requirements when it consists of additions which provide less than twelve thousand square feet of floor area and with associated parking facilities designed for forty automobiles or less.

(b) Timing and procedures for construction of the type described. Where a state or local agency other than the department is lead agency for construction of the type described in (a) of this subsection, the department shall not approve final plans for construction of a private psychiatric hospital or alcoholism treatment center until the applicant for such approval has supplied the department with a final declaration of nonsignificance or a final EIS for the construction in question, and until seven days after the issuance by the lead agency of any final EIS.

[Statutory Authority: RCW 43.21C.120. 92-02-018 (Order 224), § 246-03-030, filed 12/23/91, effective 1/23/92. Statutory Authority: RCW 43.70.040. 91-02-050 (Order 122), § 246-03-030, filed 12/27/90, effective 1/31/91.]

WAC 246-03-040 Exemptions for emergency actions. If the secretary makes a written declaration that actions must be undertaken immediately or within a time too short to allow full compliance with SEPA requirements; and that such actions are necessary to avoid an imminent threat to public health or safety, or to prevent an imminent danger to public or private property, or to prevent an imminent threat of serious environmental degradation; then such actions may be undertaken without complying with SEPA requirements: Provided, That the department is the lead agency for such actions.

[Statutory Authority: RCW 43.70.040. 91-02-050 (Order 122), § 246-03-040, filed 12/27/90, effective 1/31/91.]

WAC 246-03-050 Determination of lead agency and responsible official. (1) The department shall be the lead agency for the following actions:

(a) Adoption or amendment of regulations relating to radioactive source materials; proposals to construct, operate, or expand any uranium or thorium mill, or any tailings areas generated by uranium or thorium milling, or any low level radioactive waste burial facilities. The responsible official would be the division director, division of radiation protection, environmental health programs. Lead agency determination for other mineral processing proposals should be made in accordance with WAC 197-11-924 through 197-11-948;

(b) Approval of comprehensive plans for public water supply systems when such plans are developed by private applicants and unless indicated otherwise by WAC 197-11-932, 197-11-934 and 197-11-936, and approval of new public water supply systems or major extensions of existing public water supply systems when such systems are being proposed by a private applicant unless indicated otherwise by WAC 197-11-932, 197-11-934, and 197-11-936. The responsible official would be the section head, water supply and waste section, division of environmental health;

(c) Construction of any building, facility, or other installation for the purpose of housing department personnel or for fulfilling other statutorily directed or authorized functions. The responsible official would be a capital programs representative from the management services division, comptroller's office;

(2) Determination of the lead agency for department major actions not listed above shall be made in accordance with the procedures and requirements of WAC 246-03-140 (4)(c) and 197-11-922 through 197-11-948.

[Statutory Authority: RCW 43.21C.120. 92-02-018 (Order 224), § 246-03-050, filed 12/23/91, effective 1/23/92. Statutory Authority: RCW 43.70.040. 91-02-050 (Order 122), § 246-03-050, filed 12/27/90, effective 1/31/91.]

WAC 246-03-060 Recommended timing for threshold determination. In most cases the time required to complete a threshold determination should not exceed fifteen days. (WAC 197-11-310.)

[Statutory Authority: RCW 43.70.040. 91-02-050 (Order 122), § 246-03-060, filed 12/27/90, effective 1/31/91.]

WAC 246-03-070 Threshold determination process. In making a threshold determination, the responsible official shall follow the process outlined in WAC 197-11-330 through 197-11-390.

[Statutory Authority: RCW 43.70.040. 91-02-050 (Order 122), § 246-03-070, filed 12/27/90, effective 1/31/91.]

WAC 246-03-080 Adjudicative proceeding. Any person has the right to an adjudicative proceeding to contest the department's final threshold determination that an EIS is or is not necessary and/or the sufficiency of the final EIS. The proceeding is governed by the Administrative Procedure Act (chapter 34.05 RCW), the rules in this chapter, and by chap-

ter 246-08 WAC. If any provision in this chapter conflicts with chapter 246-08 WAC, the provision in this chapter governs.

(1) A person contesting a department's decision shall within twenty-eight days of the department's official notice of issuance of a final threshold determination or final EIS:

(a) File a written application for an adjudicative proceeding by a method showing proof of receipt by the department of health; and

(b) Include in or with the application:

(i) A specific statement of the issue or issues and law involved; and

(ii) The grounds for contesting the department decision.

(2) The initial order should be made within sixty days of the department's receipt of the application. When a party files a petition for administrative review, the review order should be made within sixty days of the department's receipt of the petition. The time to enter an order is extended by as many days as the proceeding is continued on motion by any party.

(3)(a) If the adjudicative order is that an EIS should be filed, the presiding officer or reviewing officer shall remand the matter to the department of health to file an EIS.

(b) If the adjudicative order is that the final EIS is not sufficient, the presiding officer or reviewing officer shall remand the matter to the department of health to correct the insufficiency.

[Statutory Authority: RCW 43.70.040. 91-02-050 (Order 122), § 246-03-080, filed 12/27/90, effective 1/31/91.]

WAC 246-03-090 Scoping. When the department receives a scoping notice from a lead agency, the department shall submit any comments to the lead agency within twenty-one days from the date of issuance of the determination of significance. When the department is lead agency the steps in WAC 197-11-408 and 197-11-410 shall be followed.

[Statutory Authority: RCW 43.70.040. 91-02-050 (Order 122), § 246-03-090, filed 12/27/90, effective 1/31/91.]

WAC 246-03-100 Issuance of draft EIS. When the department is lead agency, it shall issue the draft EIS in accordance with WAC 197-11-455.

[Statutory Authority: RCW 43.70.040. 91-02-050 (Order 122), § 246-03-100, filed 12/27/90, effective 1/31/91.]

WAC 246-03-110 Policies and procedures for conditioning or denying permits or other approvals. (1) The policies and goals in this section are supplementary to existing authorities of the department.

(2) It is the policy of the department to avoid or mitigate adverse environmental impacts which may result from the department's decisions.

(3) The department shall use all practical means, consistent with other essential considerations of state policy, to improve and coordinate plans, functions, programs, and resources to the end that the state and its citizens may:

(a) Fulfill the responsibilities of each generation as trustee of the environment for succeeding generations;

(b) Assure for all people of Washington safe, healthful, productive, and aesthetically and culturally pleasing surroundings;

(c) Attain the widest range of beneficial uses of the environment without degradation, risk to health or safety, or other undesirable and unintended consequences;

(d) Preserve important historic, cultural, and natural aspects of our national heritage;

(e) Maintain, wherever possible, an environment which supports diversity and variety of individual choice;

(f) Achieve a balance between population and resource use which will permit high standards of living and a wide sharing of life's amenities; and

(g) Enhance the quality of renewable resources and approach the maximum attainable recycling of depletable resources.

(4) The department recognizes that each person has a fundamental and inalienable right to a healthful environment and that each person has a responsibility to contribute to the preservation and enhancement of the environment.

(5) The department shall ensure that presently unquantified environmental amenities and values will be given appropriate consideration in decision-making along with economic and technical considerations.

(6)(a) When the environmental document for a proposal shows it will cause significant adverse impacts, the responsible official shall consider whether:

(i) The environmental document identified mitigation measures that are reasonable and capable of being accomplished;

(ii) Other local, state, or federal requirements and enforcement would mitigate the significant adverse environmental impacts; and

(iii) Reasonable mitigation measures are sufficient to mitigate the significant adverse impacts.

(b) The responsible official may:

(i) Condition the approval for a proposal if mitigation measures are reasonable and capable of being accomplished and the proposal is inconsistent with the policies in this section; or

(ii) Deny the permit or approval for a proposal if reasonable mitigation measures are insufficient to mitigate significant adverse environmental impacts and the proposal is inconsistent with the policies in this section.

(c) The procedures in WAC 197-11-660 shall also be followed when conditioning or denying permits or other approvals.

[Statutory Authority: RCW 43.70.040. 91-02-050 (Order 122), § 246-03-110, filed 12/27/90, effective 1/31/91.]

WAC 246-03-120 Public hearings. A public hearing on the environmental impact of a proposal shall be held as specified in WAC 197-11-535.

[Statutory Authority: RCW 43.70.040. 91-02-050 (Order 122), § 246-03-120, filed 12/27/90, effective 1/31/91.]

WAC 246-03-130 Responsibilities of the department as a consulted agency. Other lead agencies may request the department for consultation during the SEPA process. The department shall then provide consultation in accordance with the requirements of WAC 197-11-502, 197-11-545 and 197-11-570.

[Statutory Authority: RCW 43.70.040. 91-02-050 (Order 122), § 246-03-130, filed 12/27/90, effective 1/31/91.]

WAC 246-03-140 SEPA committee. (1) There is hereby created a SEPA committee to oversee the department's SEPA activities.

(2) The SEPA committee shall be composed of:

(a) One representative from the division of drinking water, environmental health programs;

(b) One representative from the facility licensing and certification section;

(c) One capital programs representative from the comptroller's office, management services division; and

(d) One representative from the division of radiation protection, environmental health programs.

(3) A representative from the office of the attorney general will provide legal support to the committee.

(4) The SEPA committee shall:

(a) Oversee the department's SEPA activities to ensure compliance with these agency guidelines, the state SEPA guidelines, and the policies and goals set forth in the State Environmental Policy Act;

(b) Oversee the future revision of these agency guidelines so as to reflect:

(i) Future amendment of SEPA or the state SEPA guidelines;

(ii) The creation of new department programs.

(c) Designate the responsible official for any major action for which the department is lead agency when such designation has not occurred elsewhere in these agency guidelines.

[Statutory Authority: RCW 43.21C.120. 92-02-018 (Order 224), § 246-03-140, filed 12/23/91, effective 1/23/92. Statutory Authority: RCW 43.70.040. 91-02-050 (Order 122), § 246-03-140, filed 12/27/90, effective 1/31/91.]

WAC 246-03-150 SEPA public information. (1) When the department is lead agency, the responsible official shall retain SEPA documents required by this chapter and shall make them available to the public in accordance with chapter 42.17 RCW.

(2) When the department is lead agency, the responsible official shall transmit copies of the following documents to the department of ecology headquarters office in Olympia:

(a) All draft and final EISs. (See WAC 197-11-455 and 197-11-460.)

(b) All determinations of nonsignificance (see WAC 197-11-340).

[Statutory Authority: RCW 43.70.040. 91-02-050 (Order 122), § 246-03-150, filed 12/27/90, effective 1/31/91.]

WAC 246-03-160 Severability. If any provision of this chapter or its application to any person or circumstances is held invalid, the remainder of this chapter, or the application of the provision to other persons or circumstances, shall not be affected.

[Statutory Authority: RCW 43.70.040. 91-02-050 (Order 122), § 246-03-160, filed 12/27/90, effective 1/31/91.]

Chapter 246-08 WAC
PRACTICE AND PROCEDURE

WAC

ADJUDICATIVE PROCEEDINGS

246-08-101 Declaratory orders—Format, content, and filing.
246-08-102 Declaratory orders—Procedural rights of persons in relation to petition.
246-08-103 Declaratory orders—Disposition of petition.
246-08-106 Updating mailing lists.

ADMINISTRATIVE PROCEDURES

246-08-390 Acquisition, retention and security of health care information.
246-08-395 Mailing lists and current address required.

POLICIES

246-08-400 How much can a medical provider charge for searching and duplicating medical records?
246-08-420 Public records—Access and exemptions.
246-08-440 Protection of public records.
246-08-450 Final orders, declaratory orders, interpretive statements and policy statements—Indexes.
246-08-480 Index of significant decisions.
246-08-520 Equal opportunity/affirmative action.
246-08-560 Fees—Payment—Refunds.

DISPOSITION OF SECTIONS FORMERLY CODIFIED IN THIS CHAPTER

246-08-001 Application of chapter 246-08 WAC. [Statutory Authority: RCW 34.05.220. 92-02-018 (Order 224), § 246-08-001, filed 12/23/91, effective 1/23/92. Statutory Authority: RCW 43.70.040. 91-02-049 (Order 121), recodified as § 246-08-001, filed 12/27/90, effective 1/31/91. Statutory Authority: RCW 34.05.220. 90-06-018 (Order 038), § 248-08-410, filed 2/28/90, effective 3/1/90; Regulation 08.410, effective 3/11/60.] Repealed by 93-13-005 (Order 369), filed 6/3/93, effective 7/4/93. Statutory Authority: RCW 43.70.040.

246-08-020 Application for an adjudicative proceeding. [Statutory Authority: RCW 34.05.220. 92-02-018 (Order 224), § 246-08-020, filed 12/23/91, effective 1/23/92. Statutory Authority: RCW 43.70.040. 91-02-049 (Order 121), recodified as § 246-08-020, filed 12/27/90, effective 1/31/91. Statutory Authority: RCW 34.05.220. 90-06-018 (Order 038), § 248-08-413, filed 2/28/90, effective 3/1/90.] Repealed by 93-13-005 (Order 369), filed 6/3/93, effective 7/4/93. Statutory Authority: RCW 43.70.040.

246-08-030 Administrative law judge—Authority—Application of law—Assignment—Disqualification. [Statutory Authority: RCW 34.05.220. 92-02-018 (Order 224), § 246-08-030, filed 12/23/91, effective 1/23/92. Statutory Authority: RCW 43.70.040. 91-02-049 (Order 121), recodified as § 246-08-030, filed 12/27/90, effective 1/31/91. Statutory Authority: RCW 34.05.220. 90-06-018 (Order 038), § 248-08-425, filed 2/28/90, effective 3/1/90.] Repealed by 93-13-005 (Order 369), filed 6/3/93, effective 7/4/93. Statutory Authority: RCW 43.70.040.

246-08-040 Representation. [Statutory Authority: RCW 43.70.040. 91-02-049 (Order 121), recodified as § 246-08-040, filed 12/27/90, effective 1/31/91. Statutory Authority: RCW 34.05.220. 90-06-018 (Order 038), § 248-08-428, filed 2/28/90, effective 3/1/90.] Repealed by 93-13-005 (Order 369), filed 6/3/93, effective 7/4/93. Statutory Authority: RCW 43.70.040.

246-08-050 Prehearing conference. [Statutory Authority: RCW 43.70.040. 91-02-049 (Order 121), recodified as § 246-08-050, filed 12/27/90, effective 1/31/91. Statutory Authority: RCW 34.05.220. 90-06-018 (Order 038), § 248-08-431, filed 2/28/90, effective 3/1/90.] Repealed by 93-13-005 (Order 369), filed 6/3/93, effective 7/4/93. Statutory Authority: RCW 43.70.040.

246-08-060 Notice of hearing. [Statutory Authority: RCW 43.70.-040. 91-02-049 (Order 121), recodified as § 246-08-060, filed 12/27/90, effective 1/31/91. Statutory Authority: RCW 34.05.220. 90-06-018 (Order 038), § 248-08-434, filed 2/28/90, effective 3/1/90.] Repealed by 93-13-005 (Order 369), filed 6/3/93, effective 7/4/93. Statutory Authority: RCW 43.70.040.

246-08-070 Filing and service of papers. [Statutory Authority: RCW 34.05.220. 92-02-018 (Order 224), § 246-08-070, filed 12/23/91, effective 1/23/92. Statutory Authority: RCW 43.70.040. 91-02-049 (Order 121), recodified as § 246-08-070, filed 12/27/90, effective 1/31/91. Statutory Authority: RCW 34.05.220. 90-06-018 (Order 038), § 248-08-437, filed 2/28/90, effective 3/1/90.] Repealed

by 93-13-005 (Order 369), filed 6/3/93, effective 7/4/93. Statutory Authority: RCW 43.70.040.

246-08-080 Vacating an order of dismissal for reason of default or withdrawal. [Statutory Authority: RCW 34.05.220. 92-02-018 (Order 224), § 246-08-080, filed 12/23/91, effective 1/23/92. Statutory Authority: RCW 43.70.-040. 91-02-049 (Order 121), recodified as § 246-08-080, filed 12/27/90, effective 1/31/91. Statutory Authority: RCW 34.05.220. 90-06-018 (Order 038), § 248-08-440, filed 2/28/90, effective 3/1/90; Regulation 08.440, effective 3/11/60.] Repealed by 93-13-005 (Order 369), filed 6/3/93, effective 7/4/93. Statutory Authority: RCW 43.70.040.

246-08-090 Subpoenas. [Statutory Authority: RCW 43.70.040. 91-02-049 (Order 121), recodified as § 246-08-090, filed 12/27/90, effective 1/31/91. Statutory Authority: RCW 34.05.220. 90-06-018 (Order 038), § 248-08-446, filed 2/28/90, effective 3/1/90.] Repealed by 93-13-005 (Order 369), filed 6/3/93, effective 7/4/93. Statutory Authority: RCW 43.70.040.

246-08-100 Teleconference hearing. [Statutory Authority: RCW 34.05.220. 92-02-018 (Order 224), § 246-08-100, filed 12/23/91, effective 1/23/92. Statutory Authority: RCW 43.70.040. 91-02-049 (Order 121), recodified as § 246-08-100, filed 12/27/90, effective 1/31/91. Statutory Authority: RCW 34.05.220. 90-06-018 (Order 038), § 248-08-449, filed 2/28/90, effective 3/1/90.] Repealed by 93-13-005 (Order 369), filed 6/3/93, effective 7/4/93. Statutory Authority: RCW 43.70.040.

246-08-104 Petition for rule making—Form, content, and filing. [Statutory Authority: RCW 43.70.040. 93-13-005 (Order 369), § 246-08-104, filed 6/3/93, effective 7/4/93.] Repealed by 96-19-041, filed 9/12/96, effective 10/13/96. Statutory Authority: RCW 43.70.040.

246-08-105 Petition for rule making—Consideration and disposition. [Statutory Authority: RCW 43.70.040. 93-13-005 (Order 369), § 246-08-105, filed 6/3/93, effective 7/4/93.] Repealed by 96-19-041, filed 9/12/96, effective 10/13/96. Statutory Authority: RCW 43.70.040.

246-08-110 Rules of evidence. [Statutory Authority: RCW 43.70.040. 91-02-049 (Order 121), recodified as § 246-08-110, filed 12/27/90, effective 1/31/91. Statutory Authority: RCW 34.05.220. 90-06-018 (Order 038), § 248-08-452, filed 2/28/90, effective 3/1/90.] Repealed by 93-13-005 (Order 369), filed 6/3/93, effective 7/4/93. Statutory Authority: RCW 43.70.040.

246-08-120 Contents of orders. [Statutory Authority: RCW 43.70.-040. 91-02-049 (Order 121), recodified as § 246-08-120, filed 12/27/90, effective 1/31/91. Statutory Authority: RCW 34.05.220. 90-06-018 (Order 038), § 248-08-461, filed 2/28/90, effective 3/1/90.] Repealed by 93-13-005 (Order 369), filed 6/3/93, effective 7/4/93. Statutory Authority: RCW 43.70.040.

246-08-130 Petition for review—Response to petition—Disqualification of review judge. [Statutory Authority: RCW 34.05.220. 92-02-018 (Order 224), § 246-08-130, filed 12/23/91, effective 1/23/92. Statutory Authority: RCW 43.70.040. 91-02-049 (Order 121), recodified as § 246-08-130, filed 12/27/90, effective 1/31/91. Statutory Authority: RCW 34.05.220. 90-06-018 (Order 038), § 248-08-464, filed 2/28/90, effective 3/1/90.] Repealed by 93-13-005 (Order 369), filed 6/3/93, effective 7/4/93. Statutory Authority: RCW 43.70.040.

246-08-140 Reconsideration. [Statutory Authority: RCW 34.05.-220. 92-02-018 (Order 224), § 246-08-140, filed 12/23/91, effective 1/23/92. Statutory Authority: RCW 43.70.040. 91-02-049 (Order 121), recodified as § 246-08-140, filed 12/27/90, effective 1/31/91. Statutory Authority: RCW 34.05.220. 90-06-018 (Order 038), § 248-08-470, filed 2/28/90, effective 3/1/90; Regulation 08.470, effective 3/11/60.] Repealed by 93-13-005 (Order 369), filed 6/3/93, effective 7/4/93. Statutory Authority: RCW 43.70.040.

246-08-150 Adjudicative proceedings—Notice to limited-English-speaking parties. [Statutory Authority: RCW 43.70.-040. 91-02-049 (Order 121), recodified as § 246-08-150, filed 12/27/90, effective 1/31/91. Statutory Authority: RCW 34.05.220. 90-06-018 (Order 038), § 248-08-515, filed 2/28/90, effective 3/1/90.] Repealed by 93-13-005 (Order 369), filed 6/3/93, effective 7/4/93. Statutory Authority: RCW 43.70.040.

246-08-160 Interpreters. [Statutory Authority: RCW 43.70.040. 91-02-049 (Order 121), recodified as § 246-08-160, filed 12/27/90, effective 1/31/91. Statutory Authority: RCW 34.05.220. 90-06-018 (Order 038), § 248-08-525, filed 2/28/90, effective 3/1/90.] Repealed by 93-13-005 (Order 369), filed 6/3/93, effective 7/4/93. Statutory Authority: RCW 43.70.040.

246-08-170 Group hearing. [Statutory Authority: RCW 43.70.040. 91-02-049 (Order 121), recodified as § 246-08-170, filed 12/27/90, effective 1/31/91. Statutory Authority: RCW 34.05.220. 90-06-018 (Order 038), § 248-08-535, filed 2/28/90, effective 3/1/90.] Repealed by 93-13-005 (Order 369), filed 6/3/93, effective 7/4/93. Statutory Authority: RCW 43.70.040.

246-08-180 Continuance. [Statutory Authority: RCW 43.70.040. 91-02-049 (Order 121), recodified as § 246-08-180, filed 12/27/90, effective 1/31/91. Statutory Authority: RCW 34.05.220. 90-06-018 (Order 038), § 248-08-545, filed 2/28/90, effective 3/1/90.] Repealed by 93-13-005 (Order 369), filed 6/3/93, effective 7/4/93. Statutory Authority: RCW 43.70.040.

246-08-190 Computation of time. [Statutory Authority: RCW 43.70.040. 91-02-049 (Order 121), recodified as § 246-08-190, filed 12/27/90, effective 1/31/91. Statutory Authority: RCW 34.05.220. 90-06-018 (Order 038), § 248-08-565, filed 2/28/90, effective 3/1/90.] Repealed by 93-13-005 (Order 369), filed 6/3/93, effective 7/4/93. Statutory Authority: RCW 43.70.040.

246-08-200 Judicial review of final adjudicative order. [Statutory Authority: RCW 34.05.220. 92-02-018 (Order 224), § 246-08-200, filed 12/23/91, effective 1/23/92. Statutory Authority: RCW 43.70.040. 91-02-049 (Order 121), recodified as § 246-08-200, filed 12/27/90, effective 1/31/91. Statutory Authority: RCW 34.05.220. 90-06-018 (Order 038), § 248-08-575, filed 2/28/90, effective 3/1/90.] Repealed by 93-13-005 (Order 369), filed 6/3/93, effective 7/4/93. Statutory Authority: RCW 43.70.040.

246-08-210 Variances, waivers, and exemptions. [Statutory Authority: RCW 43.70.040. 91-02-049 (Order 121), recodified as § 246-08-210, filed 12/27/90, effective 1/31/91. Statutory Authority: Chapter 34.05 RCW. 90-01-134 (Order 016), § 248-08-596, filed 12/20/89, effective 1/20/90. Statutory Authority: RCW 43.20.050. 85-15-063 (Order 289), § 248-08-596, filed 7/18/85; 84-16-031 (Order 272), § 248-08-596, filed 7/25/84. Formerly WAC 248-08-595.] Repealed by 93-13-005 (Order 369), filed 6/3/93, effective 7/4/93. Statutory Authority: RCW 43.70.040.

246-08-320 Delegation of authority by secretary. [Statutory Authority: RCW 43.70.040. 91-02-049 (Order 121), recodified as § 246-08-320, filed 12/27/90, effective 1/31/91. Statutory Authority: RCW 34.05.220. 90-06-018 (Order 038), § 248-320-340, filed 2/28/90, effective 3/1/90.] Repealed by 93-13-005 (Order 369), filed 6/3/93, effective 7/4/93. Statutory Authority: RCW 43.70.040.

246-08-330 Declaratory orders—Forms, content, and filing. [Statutory Authority: RCW 43.70.040. 91-02-049 (Order 121), recodified as § 246-08-330, filed 12/27/90, effective 1/31/91. Statutory Authority: RCW 34.05.220. 90-06-018 (Order 038), § 248-320-350, filed 2/28/90, effective 3/1/90.] Repealed by 93-13-005 (Order 369), filed 6/3/93, effective 7/4/93. Statutory Authority: RCW 43.70.040.

246-08-340 Declaratory orders—Procedural rights of persons in relation to petition. [Statutory Authority: RCW 43.70.040. 91-02-049 (Order 121), recodified as § 246-08-340, filed 12/27/90, effective 1/31/91. Statutory Authority: RCW 34.05.220. 90-06-018 (Order 038), § 248-320-360, filed 2/28/90, effective 3/1/90.] Repealed by 93-13-005 (Order 369), filed 6/3/93, effective 7/4/93. Statutory Authority: RCW 43.70.040.

246-08-350 Declaratory orders—Disposition of petition. [Statutory Authority: RCW 43.70.040. 91-02-049 (Order 121), recodified as § 246-08-350, filed 12/27/90, effective 1/31/91. Statutory Authority: RCW 34.05.220. 90-06-018 (Order 038), § 248-320-370, filed 2/28/90, effective 3/1/90.] Repealed by 93-13-005 (Order 369), filed 6/3/93, effective 7/4/93. Statutory Authority: RCW 43.70.040.

246-08-360 Petition for rule making—Form, content, and filing. [Statutory Authority: RCW 43.70.040. 91-02-049 (Order 121), recodified as § 246-08-360, filed 12/27/90, effective 1/31/91. Statutory Authority: RCW 34.05.220. 90-06-018 (Order 038), § 248-320-400, filed 2/28/90, effective 3/1/90.] Repealed by 93-13-005

(Order 369), filed 6/3/93, effective 7/4/93. Statutory Authority: RCW 43.70.040.

246-08-370 Petition for rule making—Consideration and disposition. [Statutory Authority: RCW 43.70.040. 91-02-049 (Order 121), recodified as § 246-08-370, filed 12/27/90, effective 1/31/91. Statutory Authority: RCW 34.05.-220. 90-06-018 (Order 038), § 248-320-410, filed 2/28/90, effective 3/1/90.] Repealed by 93-13-005 (Order 369), filed 6/3/93, effective 7/4/93. Statutory Authority: RCW 43.70.040.

246-08-380 Updating mailing lists. [Statutory Authority: RCW 43.70.040. 91-02-049 (Order 121), recodified as § 246-08-380, filed 12/27/90, effective 1/31/91. Statutory Authority: RCW 34.05.220. 90-06-018 (Order 038), § 248-320-500, filed 2/28/90, effective 3/1/90.] Repealed by 93-13-005 (Order 369), filed 6/3/93, effective 7/4/93. Statutory Authority: RCW 43.70.040.

ADJUDICATIVE PROCEEDINGS

WAC 246-08-101 Declaratory orders—Format, content, and filing. Any person may petition the department for a declaratory order, under RCW 34.05.240 with respect to the applicability of a particular circumstance of a rule, order, statute enforced by the agency. A petition for a declaratory order shall generally adhere to the following format:

(1) At the top of the page shall appear the wording "Before the Washington State Department of Health." On the left side of the page below the following caption shall be set out: "In the matter of the petition of (name of petitioning party to be inserted) for a declaratory order." Opposite the caption shall appear the word "petition."

(2) The body of the petition shall be set out in numbered paragraphs. The first paragraph shall state the name and address of the petitioning party. The second paragraph shall state all rules or statutes that may be brought into issue by the petition. Succeeding paragraphs shall set out the statement of facts similar in form to applicable complaints in civil actions before the superior courts of this state. The concluding paragraphs shall contain the request of the petitioner. The petition shall be subscribed and verified in the manner prescribed for verification of complaints in the superior courts of this state.

(3) The original and two legible copies shall be filed with the Department of Health, Adjudicative Service Unit, P.O. Box 47879, Olympia, WA 98504-7879. Petitions shall be on white paper, 8 1/2" x 11" in size.

[Statutory Authority: RCW 43.70.040, 43.70.050, 34.05.220, 42.17.250, 70.02.005. 06-11-056, § 246-08-101, filed 5/11/06, effective 6/11/06. Statutory Authority: RCW 43.70.040. 93-13-005 (Order 369), § 246-08-101, filed 6/3/93, effective 7/4/93.]

WAC 246-08-102 Declaratory orders—Procedural rights of persons in relation to petition. Within fifteen days after receiving a petition for a declaratory order, the department shall notify all interested persons as required by chapter 34.05 RCW about the petition and any other person it considers necessary. If a petition for a declaratory order is set for specified proceedings under RCW 34.05.240 (5)(b), the department shall give at least seven days advance written notice of the proceedings to the petitioner and all interested persons required by law and any other person it considers necessary. The notice must contain the time, date, place, and nature of the proceedings and shall describe how interested persons may participate in the proceeding.

[Statutory Authority: RCW 43.70.040, 43.70.050, 34.05.220, 42.17.250, 70.02.005. 06-11-056, § 246-08-102, filed 5/11/06, effective 6/11/06. Statutory Authority: RCW 43.70.040. 93-13-005 (Order 369), § 246-08-102, filed 6/3/93, effective 7/4/93.]

WAC 246-08-103 Declaratory orders—Disposition of petition. A declaratory order entered by the department or a decision declining to enter a declaratory order shall be in writing and shall be served upon the petitioner and all other persons described under RCW 34.05.240(3).

[Statutory Authority: RCW 43.70.040. 93-13-005 (Order 369), § 246-08-103, filed 6/3/93, effective 7/4/93.]

WAC 246-08-106 Updating mailing lists. (1) Periodically, the department may cause the following notice, or a notice substantially similar, to be mailed: "In order to maintain as current a mailing list as possible, and to eliminate mailing notices to those who no longer have need for such notices, the department will discontinue use of its old mailing lists, effective (date to be specified). If you wish to continue receiving copies of notices of intention to adopt, amend, or repeal rules after that date, please fill out the attached form and return it to the department at the address indicated on the form. If you do not return the form indicating your desire to continue to receive notices to adopt, amend, or repeal rules, your name or the names of your organization will be removed from the mailing lists."

(2) The notice regarding updating of mailing lists is to be mailed by first-class mail.

(3) The form to be filled out by those persons or organizations wishing to continue to receive department notices to adopt, amend, or repeal rules shall specify interest areas covered by these notices, thereby enabling those on mailing lists to limit correspondence received.

[Statutory Authority: RCW 43.70.040. 93-13-005 (Order 369), § 246-08-106, filed 6/3/93, effective 7/4/93.]

ADMINISTRATIVE PROCEDURES

WAC 246-08-390 Acquisition, retention and security of health care information. This section sets forth the process by which the department of health or disciplining authority obtains and protects health care information under RCW 70.02.050. This section does not apply to health care information obtained by the department through other sources.

(1) Acquisition.

(a) The department shall request health care information in writing.

(b) Health care providers shall provide the requested information pursuant to RCW 70.02.050.

(2) Retention. The department shall maintain health care information obtained under this section as long as necessary to perform agency functions.

(3) Security. The department shall secure the records and protect confidentiality.

(a) The manager of the program within the department that requested the records shall act as the custodian of records, and shall provide access to the information only as necessary to perform agency responsibilities.

(b) The custodian shall monitor the location and security of the information.

(4) The department shall not make health care information obtained under RCW 70.02.050 available for public inspection and copying except as may be required by chapter 42.17 RCW. No health care information containing patient identifying data shall be made available for public inspection and copying under chapter 42.17 RCW. Health care information obtained under this section may be released to public agencies or entities as required by law or upon agreement by the agency or entity that the health care information will be used only for authorized statutory purposes and will not be disclosed further.

[Statutory Authority: RCW 70.02.050(3). 92-07-080 (Order 253), § 246-08-390, filed 3/17/92, effective 4/17/92.]

WAC 246-08-395 Mailing lists and current address required. The department will update its mailing lists periodically. Any person may request to be added or removed from the department's mailing lists. It is the responsibility of the licensee, applicant for licensure, and person who receives or applies for benefits administered by the department, to keep the department informed of a current mailing address.

(1) Licensees, applicants for licensure, and persons who receive or apply for benefits administered by the department must provide the department with a current mailing address when submitting new applications or renewal applications with the department.

(2) Licensees, applicants for licensure, and persons who receive or apply for benefits are responsible for notifying the appropriate department programs, in writing, of any address changes. The department will accept written notice through e-mail, fax, or by regular mail.

(3) The department will use the most recent mailing address provided by the licensee, applicant, or persons who receive or apply for benefits for all official correspondence.

(4) For the purpose of this section, "licensee" means a person holding a license, permit, certification, approval, registration, charter, or similar form of authorization required by law and granted by the department.

[Statutory Authority: RCW 43.70.040, 43.70.050, 34.05.220, 42.17.250, 70.02.005. 06-11-056, § 246-08-395, filed 5/11/06, effective 6/11/06.]

POLICIES

WAC 246-08-400 How much can a medical provider charge for searching and duplicating medical records? RCW 70.02.010(15) allows medical providers to charge fees for searching and duplicating medical records. The fees a provider may charge cannot exceed the fees listed below:

(1) Copying charge per page:

(a) No more than ninety-six cents per page for the first thirty pages;

(b) No more than seventy-three cents per page for all other pages.

(2) Additional charges:

(a) The provider can charge a twenty-two dollar clerical fee for searching and handling records;

(b) If the provider personally edits confidential information from the record, as required by statute, the provider can charge the usual fee for a basic office visit.

(3) This section is effective July 1, 2007, through June 30, 2009.

(4) HIPAA covered entities: See HIPAA regulation Section 164.524 (c)(4) to determine applicability of this rule.

[Statutory Authority: RCW 70.02.010(15) and 43.70.040. 07-12-029, § 246-08-400, filed 5/30/07, effective 7/1/07. Statutory Authority: RCW 70.02.-010(14) and 43.70.040. 06-11-166, § 246-08-400, filed 5/24/06, effective 6/24/06. Statutory Authority: RCW 70.02.010(12) and 43.70.040. 05-12-013, § 246-08-400, filed 5/20/05, effective 7/1/05. Statutory Authority: RCW 70.02.010(12), 43-70-040 [43.70.040] and 70.02.900. 03-14-036, § 246-08-400, filed 6/23/03, effective 7/24/03. Statutory Authority: RCW 70.02.010 and 43.70.040. 01-16-009, § 246-08-400, filed 7/19/01, effective 8/19/01; 99-13-083, § 246-08-400, filed 6/14/99, effective 7/15/99. Statutory Authority: RCW 70.02.010(12) and 43.70.040. 97-12-087, § 246-08-400, filed 6/4/97, effective 7/5/97. Statutory Authority: RCW 43.70.040 and 70.02.101(12). 95-20-080, § 246-08-400, filed 10/4/95, effective 11/4/95.]

WAC 246-08-420 Public records—Access and exemptions. (1) The department shall, upon request, make public records available for inspection and copying, during the department's normal business hours.

(2) The location of specific public records may be obtained by contacting the program where the records are maintained or the appointed public records disclosure designee.

(3) Requests to inspect or receive copies of public records must include:

(a) A description of the requested record or records;

(b) An indication whether the requestor wishes to inspect or receive a copy of the requested records;

(c) An address or other means through which the department may communicate with the requestor to clarify the request, provide information on copying charges and collect payment, and arrange for inspection or mailing of copies of the requested record or records; and

(d) If a list of names of individuals is being requested, an explanation of the purpose for which the request is made, consistent with RCW 42.17.260(9).

(4) The department shall not charge a fee for the inspection of public records, however the department may charge for reimbursement of the costs incurred by providing copies.

(5) The department will determine the extent to which a public record is exempt from public disclosure under chapter 42.17 RCW or other statutes.

(6) The department, when denying a request for a public record in whole or in part, shall provide a statement of the specific statutory exemption that authorizes the withholding of the record or information and a brief explanation of how the exemption applies to the record or information withheld.

(7) If the department denies a record, in whole or in part, the requestor may seek review of the decision by sending a written request for review to the Agency Public Records Disclosure Officer, P.O. Box 47890, Olympia, WA 98504-7890.

[Statutory Authority: RCW 43.70.040, 43.70.050, 34.05.220, 42.17.250, 70.02.005. 06-11-056, § 246-08-420, filed 5/11/06, effective 6/11/06. Statutory Authority: RCW 43.70.050. 93-08-004 (Order 346), § 246-08-420, filed 3/24/93, effective 4/24/93.]

WAC 246-08-440 Protection of public records. Access to the record storage areas shall be restricted to insure that essential functions of the agency are carried out and public records are not damaged, altered, disorganized, or lost. Inspection shall be in the presence of an authorized department employee. Inspection shall be denied and the records withdrawn if the individual inspecting the records is doing so

in a manner likely to damage, alter, or substantially disorganize them; or attempts to remove them from the prescribed location; or is excessively interfering or will unduly interfere with other essential functions of the department.

[Statutory Authority: RCW 43.70.050. 93-08-004 (Order 346), § 246-08-440, filed 3/24/93, effective 4/24/93.]

WAC 246-08-450 Final orders, declaratory orders, interpretive statements and policy statements—Indexes. (1) In accordance with RCW 42.17.260, the department shall index:

(a) Final orders that are issued in adjudicative proceedings as defined in RCW 34.05.010(1) and contain an analysis or decision of substantial importance to the department in carrying out its duties;

(b) Declaratory orders that contain an analysis or decision of substantial importance to the department in carrying out its duties;

(c) Interpretive statements as defined in RCW 34.05.010(8); and

(d) Policy statements as defined in RCW 34.05.010(14).

(2) The department shall maintain indexes of:

(a) Final orders meeting the criteria in subsection (1)(a) of this section, issued by the department and the disciplining authorities identified in RCW 18.130.040;

(b) Declaratory orders meeting the criteria in subsection (1)(b) of this section issued by the department, the state board of health, and disciplining authorities identified in RCW 18.130.040; and

(c) Interpretive and policy statements issued by the department, the state board of health, and disciplining authorities identified in RCW 18.130.040.

(3) The indexes shall, at a minimum, contain the case or document number; type of document; name of parties, if applicable, unless such names are exempt from public disclosure; brief description of subject, program; pertinent legal citation; and location of the document.

(4) The department shall periodically update the indexes to verify that the indexed documents continue to meet the criteria in subsection (1) of this section. The department may, at any time, delete a document from an index. Under RCW 42.17.260(6), a public record may not be cited in a proceeding if it has not been indexed.

(5) The indexes are public records and are available for public inspection and copying in accordance with WAC 246-08-420 and 246-08-440. Indexes are located as follows:

(a) The index of final adjudicative orders and declaratory orders is located in the Adjudicative Service Unit, 310 Israel Road S.E., Tumwater, WA 98501; and

(b) The index of interpretive and policy statements issued by the department and the state board of health is located in the Office of the Secretary, 101 Israel Road S.E., Tumwater, WA 98501.

[Statutory Authority: RCW 43.70.040, 43.70.050, 34.05.220, 42.17.250, 70.02.005. 06-11-056, § 246-08-450, filed 5/11/06, effective 6/11/06. Statutory Authority: RCW 43.70.040. 94-04-079, § 246-08-450, filed 1/31/94, effective 3/3/94. Statutory Authority: 43.70.050. 93-08-004 (Order 346), § 246-08-450, filed 3/24/93, effective 4/24/93.]

WAC 246-08-480 Index of significant decisions. (1) The department's index of significant decisions, prepared under RCW 42.17.260, contains orders that are issued in adjudicative proceedings as defined in RCW 34.05.010(1) and include an analysis or decision of substantial importance to the department in carrying out its duties. Together with the indices maintained under WAC 246-08-450, "significant decisions" shall serve as the index required by RCW 42.17.260 (4)(b) and (c).

(2) The department selects the orders to be included in "significant decisions" based on recommendations from staff and the public. Generally, a decision or order is considered "significant" only if it provides a legal analysis or interpretation not found in existing case law, or applies settled law to unusual facts. The significant decision index shall include orders meeting the criteria in subsection (1) of this section, issued by the department and the disciplining authorities identified in RCW 18.130.040.

(3) The index shall, at a minimum, contain the case or document number; type of document; name of parties, if applicable, unless such names are exempt from public disclosure; brief description of subject, program; pertinent legal citation; and location of the document.

(4) Any person may nominate a final adjudicative order, other adjudicative order or declaratory order to be evaluated for indexing by completing an Order Index Nomination Request Form. The form can be obtained from and returned to the Adjudicative Service Unit, P.O. Box 47879, Olympia, WA 98504-7879, along with a copy of the nominated order. The department shall make a final decision as to whether to index the nominated order, and that decision is not appealable.

(5) The department shall periodically update and review the index to verify that the indexed documents continue to meet the criteria in subsection (1) of this section. The department may, at any time, delete a document from an index. Under RCW 42.17.260(6), a public record may not be cited in a proceeding if it has not been indexed.

(6) The index is a public record and is available for public inspection and copying in accordance with WAC 246-08-420 and 246-08-440. The index of significant adjudicative orders is located in the Adjudicative Service Unit, 310 Israel Road, Tumwater, WA 98501.

[Statutory Authority: RCW 43.70.040, 43.70.050, 34.05.220, 42.17.250, 70.02.005. 06-11-056, § 246-08-480, filed 5/11/06, effective 6/11/06.]

WAC 246-08-520 Equal opportunity/affirmative action. The department is firmly committed to equal opportunity and nondiscrimination both in the work force and in the delivery of services and makes every good faith effort to achieve the objectives of the affirmative action plan.

(1) **Employment -** The department recruits, hires, develops, and promotes persons in all positions without regard to race, creed, color, sex, age, national origin, marital status, or presence of a mental, physical, or sensory handicap. The department seeks to maintain a working environment free of harassment or intimidation, and to reasonably accommodate persons of disability.

(2) **Affirmative action -** The department strives to correct deficiencies regarding the utilization of protected groups, consistent with applicable state and federal laws and guidelines as outlined in the department's affirmative action plan.

(3) **Services -** The department provides services, programs, and lets contracts in a fair and impartial manner. No person shall, on the grounds of sex, race, creed, color, age, national origin, marital status, or handicap be excluded from participation in, be denied the benefits of, or be subjected to discrimination under any program or activity administered or supervised by the department as required by the federal government as a prerequisite for fiscal grants-in-aid (Sec. 601, Civil Rights Act of 1964; 78 Stat. 252; 42 U.S.C. 2000d) and chapter 49.60 RCW.

[Statutory Authority: RCW 43.70.040, 43.70.050, 34.05.220, 42.17.250, 70.02.005. 06-11-056, § 246-08-520, filed 5/11/06, effective 6/11/06. Statutory Authority: RCW 43.70.050. 93-08-004 (Order 346), § 246-08-520, filed 3/24/93, effective 4/24/93. Statutory Authority: RCW 43.70.040. 91-02-049 (Order 121), recodified as § 246-08-520, filed 12/27/90, effective 1/31/91; Order 18, § 248-10-010, filed 2/11/69.]

WAC 246-08-560 Fees—Payment—Refunds. (1) Fees are due with applications for initial licensing and renewals. The department will not proceed on applications until required fees are paid.

(2) Fee payments may be made in person or by mail. Payment shall be by check, draft, or money order made payable to the department of health.

(3) If a license is denied, revoked, or suspended, fees shall not be refunded.

(4) Application for license after denial or revocation shall include fees as provided for in this title.

(5) Failure to pay fees when due shall invalidate the license/certification/registration and all privileges granted by the license/certification/registration. A late penalty fee shall be remitted in addition to the annual renewal fee.

(6) The department of health shall refund fees it collects that are paid in excess of the stated fee, or paid erroneously.

(7) The payee shall submit to the department a cancelled check or a cash receipt as proof of payment when requesting a refund.

(8) The department shall make refunds of five dollars or less only upon written request within thirteen months from date of payment.

[Statutory Authority: RCW 43.70.050. 93-08-004 (Order 346), § 246-08-560, filed 3/24/93, effective 4/24/93. Statutory Authority: RCW 43.70.040. 91-02-049 (Order 121), recodified as § 246-08-560, filed 12/27/90, effective 1/31/91. Statutory Authority: RCW 43.01.072. 90-08-003 (Order 044), § 246-09-060, filed 3/22/90, effective 4/22/90.]

Chapter 246-10 WAC

ADMINISTRATIVE PROCEDURE—ADJUDICATIVE PROCEEDINGS

WAC

SECTION I
PRELIMINARY MATTERS

246-10-101 Application of chapter.
246-10-102 Definitions.
246-10-103 Signature authority.
246-10-104 Appearance of parties.
246-10-105 Computation of time.
246-10-106 Notarization, certification, and authentication.
246-10-107 Persons who may request adjudicative proceedings.
246-10-108 Representation.
246-10-109 Service and filing.
246-10-110 Jurisdiction.
246-10-111 Telephone proceedings.
246-10-112 Hearing location.
246-10-113 Good faith requirement.
246-10-114 Public records.
246-10-115 Expenses and witness fees.
246-10-116 Immunity.
246-10-117 Official notice and agency expertise.
246-10-118 Sanctions.
246-10-119 Intervention.
246-10-120 Form of pleadings and orders.
246-10-121 Notice to limited-English-speaking parties.
246-10-122 Interpreters.
246-10-123 Subpoenas.
246-10-124 Preliminary requirements.

SECTION II
INITIATING ACTIONS

246-10-201 Form and content of initiating documents.
246-10-202 Amendment of initiating documents.
246-10-203 Request for adjudicative proceeding.
246-10-204 Default.
246-10-205 Scheduling orders.

SECTION III
EMERGENCY ADJUDICATIVE PROCEEDINGS

246-10-301 Conduct of emergency adjudicative proceedings.
246-10-302 Effect of summary action.
246-10-303 Form and content of summary actions.
246-10-304 Adjudicative proceedings upon summary action.
246-10-305 Opportunity for prompt adjudicative proceeding.
246-10-306 Proceedings prior to prompt adjudicative proceeding.

SECTION IV
SETTLEMENT AND PREHEARING PROCEEDINGS

246-10-401 Settlement conference.
246-10-402 Discovery.
246-10-403 Motions.
246-10-404 Prehearing conference.
246-10-405 Protective orders.

SECTION V
BRIEF ADJUDICATIVE PROCEEDINGS

246-10-501 Application of brief adjudicative proceedings.
246-10-502 Preliminary record in brief adjudicative proceedings.
246-10-503 Conduct of brief adjudicative proceedings.
246-10-504 Effectiveness of orders on brief adjudicative proceedings.
246-10-505 Agency record in brief proceedings.

SECTION VI
HEARING

246-10-601 Notice of adjudicative proceeding.
246-10-602 Conduct of adjudicative proceeding.
246-10-603 Evidence.
246-10-604 Proposed order.
246-10-605 Issuance of final order.
246-10-606 Standard of proof.
246-10-607 Consolidated proceedings.
246-10-608 Initial order.

SECTION VII
POSTHEARING PROCESS

246-10-701 Appeal from initial order.
246-10-702 Final orders.
246-10-703 Stay of final orders.
246-10-704 Reconsideration of final orders.
246-10-705 Agency record of adjudicative proceedings.
246-10-706 Judicial review.
246-10-707 Vacating an order for reason of default or withdrawal.

SECTION I
PRELIMINARY MATTERS

WAC 246-10-101 Application of chapter. (1) This chapter shall apply to adjudicative proceedings authorized to be conducted under the authority of the department of health.

(2) This chapter applies to adjudicative proceedings begun on or after the effective date of this chapter in programs administered by the department of health. For purposes of this section, "begun" shall mean the receipt by the

appropriate office of an application for an adjudicative proceeding. These rules shall be the exclusive rules governing adjudicative proceedings under the jurisdiction of the department.

(3) To the extent that these rules differ by inclusion, deletion, or content from the model rules adopted by the chief administrative law judge pursuant to RCW 34.05.250, this chapter shall prevail in order to provide a process consistent with the organization of the department.

(4) Where a provision of this chapter conflicts with another chapter of this title, the provision of this chapter shall prevail.

(5) Where a provision of this chapter conflicts with a provision of the Revised Code of Washington, the statute shall prevail.

[Statutory Authority: RCW 43.70.040. 93-13-005 (Order 369), § 246-10-101, filed 6/3/93, effective 7/4/93.]

WAC 246-10-102 Definitions. As used in these rules of practice and procedure, the following terms shall have the meaning set forth in this section unless the context clearly indicates otherwise. Other terms shall have their ordinary meaning unless defined elsewhere in this chapter.

"Adjudicative clerk office" shall mean the unit with responsibility for: Docketing; service of orders; and maintaining custody of the adjudicative proceeding record, whose address is:

Department of Health
Adjudicative Clerk Office
2413 Pacific Avenue
PO Box 47879
Olympia, WA 98504-7879

"Adjudicative proceeding" or "hearing" shall mean a proceeding required by statute or constitutional right and conducted under the rules of this chapter, which provides an opportunity to be heard by the department prior to the entry of a final order under this chapter.

"Brief adjudicative proceeding" shall mean an adjudicative proceeding or hearing, the scope or conduct of which is limited as provided in this chapter.

"Department" shall mean the Washington state department of health and, where appropriate, the secretary of the Washington state department of health or the secretary's designee.

"Docket" or "docketing" shall mean the list or calendar of causes set to be heard at a specified time, prepared by the adjudicative clerk office for the use of the department.

"Filing" shall mean receipt by the adjudicative clerk office.

"Initiating document" shall mean a written agency document which initiates action against a license holder or applicant for license or recipient of benefits and which creates the right to an adjudicative proceeding. It may be entitled a statement of charges, notice of intent to deny, order, or by any other designation indicating the action or proposed action to be taken.

"License" shall have the meaning set forth in RCW 34.05.010, and includes any license, certification, registration, permit, approval, or any similar form of authorization required by law to be obtained from the department.

"Office of professional standards" shall mean the unit responsible for conducting adjudicative proceedings.

"Presiding officer" shall mean the person who is assigned to conduct an adjudicative proceeding. The presiding officer may be an employee of the department who is authorized to issue a final decision as designee of the secretary, or an administrative law judge employed by the office of administrative hearings.

"Presiding officer for brief adjudicative proceedings" shall mean an employee of the department who is authorized to conduct brief adjudicative proceedings.

"Program" shall mean the administrative unit within the department responsible for implementation of a particular statute or rule.

"Prompt adjudicative proceeding" or "prompt hearing" shall mean a hearing conducted at the request of the license holder or applicant for license following summary action taken in accord with this chapter against that license holder or applicant.

"Protective order" shall mean an order issued under this chapter which limits the use of, access to, or disclosure of information or evidence.

"Recipient of benefits" shall mean an individual who has qualified for benefits administered by the department.

"Respondent" shall mean a person eligible to request an adjudicative proceeding in a program under the jurisdiction of the department who is named in an initiating document.

"Secretary" shall mean the secretary of the department of health or his/her designee.

"Summary action" shall mean an agency action to address an immediate danger to the public health, safety, or welfare and shall include, but not be limited to, a cease and desist order, an order of summary suspension, and an order of summary restriction of a license.

[Statutory Authority: RCW 18.155.040. 97-12-089, § 246-10-102, filed 6/4/97, effective 7/5/97. Statutory Authority: RCW 43.70.040. 94-04-079, § 246-10-102, filed 1/31/94, effective 3/3/94; 93-13-005 (Order 369), § 246-10-102, filed 6/3/93, effective 7/4/93.]

WAC 246-10-103 Signature authority. (1) A person designated by the program shall sign all initiating documents issued under this chapter.

(2) The presiding officer shall sign all orders issued under this chapter.

(3) Authority to sign shall be indicated by designation of the title of the person signing and shall not require any other affirmation, affidavit, or allegation.

[Statutory Authority: RCW 43.70.040. 94-04-079, § 246-10-103, filed 1/31/94, effective 3/3/94; 93-13-005 (Order 369), § 246-10-103, filed 6/3/93, effective 7/4/93.]

WAC 246-10-104 Appearance of parties. If a respondent requests an adjudicative proceeding to contest the action, that party shall appear at all stages of the proceeding except as otherwise provided in this section.

(1) If the respondent is represented as provided in this chapter, the respondent shall appear personally at the hearing and at any scheduled settlement conference but need not appear at the prehearing conference or at presentation of motions.

(2) Parties may be represented by counsel at all proceedings.

(3) The respondent may appear by telephone at any portion of the proceedings conducted by telephone, in the discretion of the presiding officer following reasonable advance notice to the presiding officer and to the opposing party.

(4) The requirement of personal appearance may be waived for good cause in the discretion of the presiding officer.

(5) Failure to appear as provided in this chapter shall be grounds for taking final action by default.

[Statutory Authority: RCW 43.70.040. 93-13-005 (Order 369), § 246-10-104, filed 6/3/93, effective 7/4/93.]

WAC 246-10-105 Computation of time. (1) When computing a period of time prescribed or allowed by an applicable statute or rule, the day of the act, event, or default from which the designated period of time begins to run shall not be included.

(2) The last day of the computed period shall be included unless the last day is a Saturday, Sunday, or legal holiday.

(3) When the last day is a Saturday, Sunday, or legal holiday, the period shall run until the end of the next day which is not a Saturday, Sunday, or legal holiday.

(4) When the period of time prescribed or allowed is seven days or less, any intermediate Saturday, Sunday, and legal holiday shall be excluded from the computation.

[Statutory Authority: RCW 43.70.040. 93-13-005 (Order 369), § 246-10-105, filed 6/3/93, effective 7/4/93.]

WAC 246-10-106 Notarization, certification, and authentication. (1) A person's sworn written statement, declaration, verification, certificate, oath, or affidavit may be authenticated by an unsworn written statement which is executed in substantially the following form:

> I certify (or declare) under penalty of perjury under the laws of the state of Washington that the foregoing is true and correct.
>
> _____ _____
>
> (Date and Place) (Signature)

(2) Documents or records may be authenticated by a certification, as provided in subsection (1) of this section, from the custodian of the records or other qualified person that the documents or records are what they purport to be.

(3) Signature of any attorney shall be accompanied by and authenticated by that attorney's Washington State Bar Association number.

(4) Documents prepared and submitted by a party who is not represented by an attorney shall be signed and dated by that party and shall include that party's current address.

(5) Signature by a party or an attorney on a document shall constitute a certificate by the party or attorney that he/she has read the document, believes there are grounds to support it, and has not submitted the document for delay, harassment, or needless increase in the cost of a proceeding.

(6) Compliance with certification requirements of subsections (1) and (2) of this section creates a rebuttable presumption that a document is authentic.

[Statutory Authority: RCW 43.70.040. 93-13-005 (Order 369), § 246-10-106, filed 6/3/93, effective 7/4/93.]

WAC 246-10-107 Persons who may request adjudicative proceedings. The persons indicated may request an adjudicative proceeding under this chapter.

(1)(a) With respect to the denial of applications made under WAC 246-290-100, 246-290-110, 246-290-120, 246-290-130, 246-290-140, 246-291-100, 246-291-110, 246-291-120, 246-291-130, 246-291-140, and 246-295-040, the denied applicant may request an adjudicative proceeding.

(b) A person whose application for the approval of a new public water system is denied under WAC 246-293-190, a purveyor whose license is adversely affected by a departmental decision under WAC 246-293-190 or the county legislative authority having jurisdiction in the area affected by the decision may request an adjudicative proceeding under this chapter.

(c) A purveyor affected by the decision of the department under WAC 246-293-430 or the county legislative authority having jurisdiction in the area may request an adjudicative proceeding with respect to a decision made under WAC 246-293-430.

(d) A person upon whom a civil penalty is imposed under RCW 70.119A.040 may request an adjudicative proceeding.

(2) With respect to all other matters involving the issuance, denial of, or adverse action against, a license, the applicant or licensee may request an adjudicative proceeding.

(3) With respect to matters involving receipt of benefits or application therefor, the recipient of or applicant for the benefits may request an adjudicative proceeding.

(4) With respect to an application for approval of a school or curriculum, the person or authority that applied for such approval may request an adjudicative proceeding.

(5) With respect to the department's final threshold determination that an environmental impact statement (EIS) is or is not necessary and with respect to the adequacy of a final EIS, any person may request an adjudicative proceeding who:

(a) Is seeking to protect an interest within the zone of interests to be protected or regulated by the statute or constitutional guarantee in question; and

(b) Will be specifically and perceptibly harmed by the proposed action.

(6) Any application for an adjudicative proceeding that on its face demonstrates that the person making the application does not have standing under this rule may be summarily dismissed by entry of a decision pursuant to RCW 34.05.416. A motion to dismiss a matter for lack of standing may be made at any time prior to entry of the final order.

[Statutory Authority: RCW 18.130.050 and 43.70.040. 96-21-027, § 246-10-107, filed 10/7/96, effective 11/7/96. Statutory Authority: RCW 43.70.-040. 94-04-079, § 246-10-107, filed 1/31/94, effective 3/3/94; 93-13-005 (Order 369), § 246-10-107, filed 6/3/93, effective 7/4/93.]

WAC 246-10-108 Representation. (1) Persons requesting an adjudicative proceeding may be represented subject to the following conditions:

(a) A person requesting an adjudicative proceeding may represent himself/herself or may be represented by an attor-

ney who has complied with the admission to practice rules of the supreme court of the state of Washington;

(b) Every attorney representing a person requesting an adjudicative proceeding shall file a notice of appearance with the adjudicative clerk office upon commencing representation, and shall file a notice of withdrawal of counsel with the adjudicative clerk office upon terminating representation.

(c) No person requesting an adjudicative proceeding may be represented in an adjudicative proceeding by an employee of the department.

(2) No current or former employee of the department may appear as an expert, character witness, or representative of any party other than the state of Washington if he/she took an active part in investigating or evaluating the case or represented the agency in the matter, unless written permission of the secretary is granted. No current or former member of the attorney general's office staff who participated personally and substantially in investigating or evaluating the matter at issue while so employed may represent a party or otherwise participate in a related proceeding without first having obtained the written consent of the attorney general's office.

[Statutory Authority: RCW 18.155.040. 97-12-089, § 246-10-108, filed 6/4/97, effective 7/5/97. Statutory Authority: RCW 43.70.040. 93-13-005 (Order 369), § 246-10-108, filed 6/3/93, effective 7/4/93.]

WAC 246-10-109 Service and filing. (1) A party filing a pleading, brief, or paper other than an initiating document or application for an adjudicative proceeding as required or permitted by these rules, shall serve a copy of the paper upon the opposing party or any designated representative of the opposing party prior to or simultaneous with filing.

(2) Unless otherwise provided by law, filing and service shall be made by personal service; by first class, registered, or certified mail; or by electronic telefacsimile transmission (fax) where copies are mailed simultaneously.

(3) Filing shall be complete upon actual receipt during normal business hours at the adjudicative clerk office.

(4) Service shall be complete when personal service is made; or mail is properly stamped, addressed, and deposited in the United States mail; or fax transmission is completed and copies are deposited in the United States mail properly stamped and addressed.

(5) Proof of service shall consist of filing as required by these rules, together with one of the following:

(a) An acknowledgement of service;

(b) A certificate of service including the date the papers were served, the parties upon whom served, the signature of the serving party, and a statement that service was completed by:

(i) Personal service; or

(ii) Mailing in the United States mail a copy properly addressed with postage and fees prepaid to each party and each designated representative.

(6) For the purpose of service on a licensee or a person requesting an adjudicative proceeding, service shall be made at the last known address provided to the department in accordance with WAC 246-01-100, unless the program has actual knowledge of a different correct address for the person being served.

[Statutory Authority: RCW 18.155.040. 97-12-089, § 246-10-109, filed 6/4/97, effective 7/5/97. Statutory Authority: RCW 43.70.040. 94-04-079, § 246-10-109, filed 1/31/94, effective 3/3/94; 93-13-005 (Order 369), § 246-10-109, filed 6/3/93, effective 7/4/93.]

WAC 246-10-110 Jurisdiction. (1) The department has jurisdiction over all licenses issued by the department and over all holders of and applicants for licenses. Such jurisdiction is retained even if an applicant requests to withdraw the application, or a licensee surrenders or fails to renew a license.

(2) The department has jurisdiction over unlicensed practice of any activity for which a license is required unless otherwise prohibited by law.

[Statutory Authority: RCW 43.70.040. 94-04-079, § 246-10-110, filed 1/31/94, effective 3/3/94; 93-13-005 (Order 369), § 246-10-110, filed 6/3/93, effective 7/4/93.]

WAC 246-10-111 Telephone proceedings. (1) The presiding officer may conduct all or part of the proceedings or permit a party or witness to appear by telephone or other electronic means if each participant in the proceedings has an opportunity to participate in, hear, and, if technically and economically feasible, see the entire proceeding while it is taking place. Cost of such appearance may be assessed to the party so appearing or on whose behalf the witness appears.

(2) If all or part of the proceedings is conducted as provided in subsection (1) of this section, the parties shall file and serve copies of all documentary evidence no less than three days prior to the proceeding. The presiding officer may, for good cause, allow exceptions to this requirement.

[Statutory Authority: RCW 43.70.040. 93-13-005 (Order 369), § 246-10-111, filed 6/3/93, effective 7/4/93.]

WAC 246-10-112 Hearing location. The presiding officer shall designate sites for the conduct of proceedings taking into account accessibility, efficiency, and economy.

[Statutory Authority: RCW 43.70.040. 93-13-005 (Order 369), § 246-10-112, filed 6/3/93, effective 7/4/93.]

WAC 246-10-113 Good faith requirement. Good faith shall be the standard for compliance with these rules. Failure to make a good faith effort to comply with these rules shall be grounds for sanctions as provided in this chapter.

[Statutory Authority: RCW 43.70.040. 93-13-005 (Order 369), § 246-10-113, filed 6/3/93, effective 7/4/93.]

WAC 246-10-114 Public records. (1) All papers, exhibits, transcripts, and other materials required by or submitted in accordance with this chapter shall be considered public records.

(2) Release of information upon request for public records shall be subject to the following limitations:

(a) Release of health care information shall comply with chapter 70.02 RCW and rules promulgated thereunder;

(b) Protective orders issued pursuant to WAC 246-10-405 shall prevail; and

(c) Chapter 42.17 RCW shall govern the release of records.

[Statutory Authority: RCW 43.70.040. 94-04-079, § 246-10-114, filed 1/31/94, effective 3/3/94; 93-13-005 (Order 369), § 246-10-114, filed 6/3/93, effective 7/4/93.]

WAC 246-10-115 Expenses and witness fees. (1) Fees and expenses shall be paid at the following rates to witnesses appearing under subpoena by the party requesting the appearance:

(a) Fees shall be paid at the daily rate established for jurors in district court of Thurston County; and

(b) Expenses shall be paid at the rate established for employees of the state of Washington, or as otherwise required by law.

(2) Fees for an expert witness shall be negotiated by and paid by the party requesting services of the expert.

(3) All expenses incurred in connection with proceedings under this chapter shall be paid by the party incurring the expense.

(4) The department shall pay expenses associated with:

(a) The facility in which proceedings are conducted; and

(b) Recording of the proceedings.

(5) Expenses related to preparation and distribution of the transcript of proceedings shall be paid by the party filing a motion or request for review of an initial order or petition for reconsideration, appealing a final order, or otherwise requesting the transcript.

[Statutory Authority: RCW 43.70.040. 94-04-079, § 246-10-115, filed 1/31/94, effective 3/3/94; 93-13-005 (Order 369), § 246-10-115, filed 6/3/93, effective 7/4/93.]

WAC 246-10-116 Immunity. The legislature has determined that persons who file complaints with or provide information to the department regarding health care practitioners licensed by the department are immune from civil liability, provided that such persons have acted in good faith. RCW 4.24.240 through 4.24.260, 18.130.170, 18.130.180, and 18.130.300 set forth the provisions under which immunity is granted.

[Statutory Authority: RCW 43.70.040. 93-13-005 (Order 369), § 246-10-116, filed 6/3/93, effective 7/4/93.]

WAC 246-10-117 Official notice and agency expertise. (1) Official notice may be taken as provided in RCW 34.05.452(5).

(2) The department, through its designated presiding officer, may use its expertise and specialized knowledge to evaluate and draw inferences from the evidence presented to it.

[Statutory Authority: RCW 43.70.040. 93-13-005 (Order 369), § 246-10-117, filed 6/3/93, effective 7/4/93.]

WAC 246-10-118 Sanctions. (1) Orders may include sanctions against either party.

(2) Grounds for sanctions may include:

(a) Failure to comply with these rules or orders of the presiding officer; and

(b) Willful interference with the progress of proceedings.

(3) Sanctions may include:

(a) Dismissal of the matter;

(b) Proceeding in default; and

(c) Other sanctions as appropriate.

(4) The order shall state the grounds upon which any sanctions are imposed.

[Statutory Authority: RCW 43.70.040. 93-13-005 (Order 369), § 246-10-118, filed 6/3/93, effective 7/4/93.]

WAC 246-10-119 Intervention. (1) The presiding officer may grant a petition for intervention pursuant to RCW 34.05.443.

(2) A request to intervene shall be handled as a prehearing motion and shall be subject to the dates contained in the scheduling order. Within the sound exercise of discretion, the presiding officer may allow intervention if:

(a) The intervenor is not a party to the matter but has a substantial interest in outcome of the matter and the interest of the intervenor is not adequately represented by a party, or other good cause exists; and

(b) Any representative of the intervenor meets the requirements of WAC 246-10-108.

(3) A person shall not be allowed to intervene if that person had notice of the agency's decision and, upon timely application, would have been able to appear as a party in the matter in which intervention is sought, but failed to make such timely application.

(4) If intervention is granted, the intervenor shall be subject to these rules on the same basis as the other parties to the proceeding, unless otherwise limited in the order granting intervention.

[Statutory Authority: RCW 43.70.040. 93-13-005 (Order 369), § 246-10-119, filed 6/3/93, effective 7/4/93.]

WAC 246-10-120 Form of pleadings and orders. (1) Pleadings, orders, and other papers filed, served, or entered under this chapter shall be:

(a) Captioned with the name of the state of Washington, department of health and the title of the proceeding; and

(b) Signed by the person filing, serving, or entering the document. When that person is an attorney representing a party, the signature block shall include the attorney's Washington State Bar Association number.

(2) All orders shall comply with RCW 34.05.461 and the requirements of this chapter.

[Statutory Authority: RCW 43.70.040. 93-13-005 (Order 369), § 246-10-120, filed 6/3/93, effective 7/4/93.]

WAC 246-10-121 Notice to limited-English-speaking parties. When the program or the adjudicative clerk office is notified or otherwise made aware that a limited-English-speaking person is a party in an adjudicative proceeding, all notices concerning the hearing, including notices of hearing, continuance, and dismissal, shall either be in the primary language of the party or shall include a notice in the primary language of the party which describes the significance of the notice and how the party may receive assistance in understanding and, if necessary, responding to the notice.

[Statutory Authority: RCW 18.155.040. 97-12-089, § 246-10-121, filed 6/4/97, effective 7/5/97. Statutory Authority: RCW 43.70.040. 93-13-005 (Order 369), § 246-10-121, filed 6/3/93, effective 7/4/93.]

WAC 246-10-122 Interpreters. (1) A "hearing impaired person" means a person who, because of a hearing impairment or speech defect, cannot readily understand or communicate in spoken language. A "hearing impaired person" includes a person who is deaf, deaf and blind, or hard of hearing.

(2) A "limited-English-speaking person" means a person who because of a non-English-speaking cultural background cannot readily speak or understand the English language.

(3) If a hearing impaired person or a limited-English-speaking person is involved in an adjudicative proceeding and a need for an interpreter is made known to the adjudicative clerk office, the presiding officer shall appoint an interpreter who is acceptable to the parties or, if the parties are unable to agree on an interpreter, the presiding officer shall select and appoint an interpreter.

(4) Before beginning to interpret, an interpreter shall take an oath or make affirmation that:

(a) A true interpretation shall be made to the impaired person of all the proceedings in a language or in a manner the impaired person understands; and

(b) The interpreter shall repeat the statements of the impaired person to the presiding officer, in the English language, to the best of the interpreter's skill and judgment.

(5) When an interpreter is used in a proceeding:

(a) The interpreter shall translate all statements made by other participants in the proceeding;

(b) The presiding officer shall ensure sufficient extra time is provided to permit translation; and

(c) The presiding officer shall ensure that the interpreter translates the entire proceeding to the hearing impaired person or limited-English-speaking person to the extent that the person has the same opportunity to understand the statements made as would a person not requiring an interpreter.

(6) An interpreter appointed under this section shall be entitled to a reasonable fee for services, including waiting time and reimbursement for actual necessary travel expenses. The program shall pay the interpreter fee and expenses incurred for interpreters for license holders, applicants, or recipients of benefits. The party on whose behalf a witness requiring an interpreter appears shall pay for interpreter services for that witness.

(7) All proceedings shall be conducted consistent with chapters 2.42 and 2.43 RCW.

[Statutory Authority: RCW 18.155.040. 97-12-089, § 246-10-122, filed 6/4/97, effective 7/5/97. Statutory Authority: RCW 43.70.040. 93-13-005 (Order 369), § 246-10-122, filed 6/3/93, effective 7/4/93.]

WAC 246-10-123 Subpoenas. (1) The presiding officer, the secretary or designee, and attorneys for parties may issue subpoenas to residents of the state of Washington, to license holders and applicants for license, and to other persons or entities subject to jurisdiction under RCW 4.28.185.

(2) The presiding officer shall issue subpoenas pursuant to RCW 34.05.446(1) for parties not represented by counsel upon request of the party and upon a showing of relevance and reasonable scope of the testimony or evidence sought. Requests for issuance of subpoenas must be made in writing to the presiding officer stating the relevance and the scope of testimony or evidence sought.

(3) The person on whose behalf the subpoena is issued shall pay any witness fees and expenses as provided in WAC 246-10-115 or costs for interpreters for such witnesses as provided in WAC 246-10-122.

(4) Attendance of persons subpoenaed and production of evidence may be required at any designated place in the state of Washington.

(5) Every subpoena shall:

(a) Comply with WAC 246-10-120;

(b) Identify the party causing issuance of the subpoena;

(c) State the title of the proceeding; and

(d) Command the person to whom the subpoena is directed to attend and give testimony and/or produce designated items under the person's control at a specified time and place.

(6) A subpoena may be served by any suitable person eighteen years of age or older by:

(a) Giving a copy to the person to whom the subpoena is addressed;

(b) Leaving a copy at the residence of the person to whom the subpoena is addressed with a person of suitable age and discretion;

(c) Sending a copy by mail to the current address on file with the department if the person is licensed by the department or has filed an application for a license with the department; or

(d) Sending a copy by certified mail with proof of receipt if the person is neither licensed by nor has applied for a license with the department.

(7) Proof of service may be made by:

(a) Affidavit of personal service;

(b) Certification by the person mailing the subpoena to a license holder or applicant; or

(c) Return or acknowledgment showing receipt by the person subpoenaed or his/her representative. Any person accepting certified or registered mail at the last known address of the person subpoenaed shall be considered an authorized representative.

(8) The presiding officer, upon motion made promptly and before the time specified for compliance in the subpoena, may:

(a) Quash or modify the subpoena if the subpoena is unreasonable or requires evidence not relevant to any matter at issue; or

(b) Condition denial of the motion upon just and reasonable conditions, including advancement of the reasonable cost by the person on whose behalf the subpoena is issued of producing the books, documents, or tangible things; or

(c) Issue a protective order under RCW 34.05.446.

(9) The department may seek enforcement of a subpoena under RCW 34.05.588(1) or proceed in default pursuant to WAC 246-10-204.

[Statutory Authority: RCW 43.70.040. 94-04-079, § 246-10-123, filed 1/31/94, effective 3/3/94; 93-13-005 (Order 369), § 246-10-123, filed 6/3/93, effective 7/4/93.]

WAC 246-10-124 Preliminary requirements. (1) An applicant for an initial license or renewal of an existing license shall not be entitled to an adjudicative proceeding unless the applicant has submitted:

(a) A completed initial application or renewal application, as appropriate; and

(b) All applicable application, examination, or renewal fees payable in connection with such application or license.

(2) An aggrieved applicant shall not be entitled to an adjudicative proceeding with respect to the denial of an application submitted under WAC 246-290-100, 246-290-110, 246-290-120, 246-290-130, 246-290-140, 246-291-100, 246-

291-110, 246-291-120, 246-291-130, 246-291-140, or 246-295-040, unless the applicant has submitted to the district engineer or other departmental employee responsible for reviewing the submittal, a certification that, to the best of the applicant's knowledge and belief, the submittal is complete and demonstrates compliance with the state's drinking water regulations. Certification with respect to water system plans, project reports, construction documents and other submittals requiring preparational review by a licensed professional engineer shall be provided on behalf of the applicant by the licensed professional engineer preparing or reviewing the submittal. Failure to comply with these preliminary requirements shall result in the denial of the application for adjudicative proceeding without further review.

(3) An affected party shall not be entitled to an adjudicative proceeding with respect to a decision made under WAC 246-293-190 unless:

(a) Except with respect to a county legislative authority, the applicant shall have complied with all preliminary requirements established under the coordinated water system plan approved by the county legislative authority and the department or, if the critical water supply service area's external boundaries have been approved but a coordinated water system plan has not been approved and adopted, then with any interim requirements imposed by the county legislative authority; and

(b) Within sixty days of the department's receipt of the request for an adjudicative proceeding, the applicant submits copies of the complete record of all proceedings conducted under the applicable coordinated water system plan or interim requirements. If such proceedings were taped or otherwise recorded, the record submitted to the department shall include a transcript of the hearing or hearings which shall be prepared and certified as correct by a registered professional court reporter.

(c) Failure to comply with the preliminary requirements outlined herein shall result in a denial of the hearing application without further review.

(4) WAC 246-293-430.

(a) An adjudicative proceeding shall not be conducted with respect to a departmental decision made under WAC 246-293-430 unless, within sixty days of the department's receipt of the request for an adjudicative proceeding, the applicant has, at his or her own expense, submitted a transcript of the hearing conducted under WAC 246-293-430 from tapes or other record of the hearing which the department shall make available for that purpose. The transcript shall be prepared and certified as correct by a registered professional court reporter. Failure to comply with preliminary requirements established under this section shall result in the dismissal of the hearing application without further review.

(b) If a request for an adjudicative proceeding has been timely filed under this section and a transcript of the record has been timely submitted, the department shall promptly provide the presiding officer with copies of all documents and exhibits admitted at the hearing conducted under WAC 246-293-430.

(c) The departmental employee responsible for the department's decision under WAC 246-293-430 shall provide a copy of his or her decision to the presiding officer and may submit documents or evidence not made part of the record at the hearing conducted under WAC 246-293-430. Copies of all such documents shall be provided to all other parties involved in the proceeding.

[Statutory Authority: RCW 18.130.050 and 43.70.040. 96-21-027, § 246-10-124, filed 10/7/96, effective 11/7/96. Statutory Authority: RCW 43.70.-040. 94-04-079, § 246-10-124, filed 1/31/94, effective 3/3/94; 93-13-005 (Order 369), § 246-10-124, filed 6/3/93, effective 7/4/93.]

SECTION II
INITIATING ACTIONS

WAC 246-10-201 Form and content of initiating documents. (1) Initiating documents shall include a clear and concise statement of the:

(a) Identity and authority of the person issuing the document;

(b) Factual basis for the action or proposed action set forth in the document;

(c) Statutes and rules alleged to be at issue;

(d) Identity of the party against whom the action is taken or proposed to be taken;

(e) Action or proposed action or penalties, including the statutory or rule authority for those actions or penalties;

(f) Signature of the person issuing the document and the date signed; and

(g) Method by which an adjudicative proceeding may be requested.

(2) Initiating documents shall be accompanied by the following documents:

(a) Notice that the respondent may defend against the action or proposed action; and

(b) Form for requesting adjudicative proceeding.

(3) Initiating documents shall be served as described in WAC 246-10-109.

[Statutory Authority: RCW 43.70.040. 94-04-079, § 246-10-201, filed 1/31/94, effective 3/3/94; 93-13-005 (Order 369), § 246-10-201, filed 6/3/93, effective 7/4/93.]

WAC 246-10-202 Amendment of initiating documents. (1) Prior to the hearing date, initiating documents may be amended subject to the following conditions:

(a) Amended initiating documents shall meet the requirements of WAC 246-10-201(1);

(b) Amended initiating documents shall be accompanied by the documents described in WAC 246-10-201(2);

(c) Whenever amended initiating documents are issued, a new interval for response will begin, as described in WAC 246-10-203, unless the respondent requests the time periods set by the original initiating document; and

(d) Issuance of amended initiating documents ends all obligations of the parties under the prior initiating documents.

(2) On the hearing date, the initiating documents may be amended subject to the following conditions:

(a) The documents may be amended upon motion of the state;

(b) The documents may not be amended without the approval of the presiding officer; and

(c) Upon motion of a party or upon his/her own initiative, the presiding officer may grant a continuance on all or

part of the matter if necessary to afford the respondent an opportunity to prepare a defense to the amended documents.

[Statutory Authority: RCW 43.70.040. 94-04-079, § 246-10-202, filed 1/31/94, effective 3/3/94; 93-13-005 (Order 369), § 246-10-202, filed 6/3/93, effective 7/4/93.]

WAC 246-10-203 Request for adjudicative proceeding. A respondent may respond to an initiating document by filing an application for an adjudicative proceeding or by waiving the opportunity for adjudicative proceeding.

(1) If the respondent wishes to file an application for an adjudicative proceeding:

(a) An application for adjudicative proceeding must be filed in accordance with the following time periods:

(i) For matters under chapter 18.130 RCW, the Uniform Disciplinary Act, within twenty days of service of the initiating documents unless an extension has been granted as provided in subsection (3) of this section; and

(ii) For all other matters in which the program proposes to deny, suspend, revoke or modify a license or proposes to impose a civil fine, within twenty-eight days of receipt of the initiating documents, unless otherwise provided by statute; and

(iii) For all other matters, within twenty days of service of the initiating documents, unless otherwise provided by statute.

(b) The application for adjudicative proceeding shall be made either on the Request for Adjudicative Proceeding Form accompanying the initiating documents or by a written document containing at least the following information:

(i) Name and address of the party requesting an adjudicative proceeding;

(ii) Name and address of the attorney representing the party, if any;

(iii) Identification of the portion or portions of the initiating documents contested;

(iv) Summary of the party's position on the portion or portions contested;

(v) Statement of the party's standing to request an adjudicative proceeding under WAC 246-10-107; and

(vi) For matters not under chapter 18.130 RCW and in which the department proposes to deny, suspend, revoke or modify a license or proposes to impose a civil fine, the application shall include a copy of the initiating document containing the adverse notice.

(c) By filing a request for adjudicative proceeding, the responding party agrees to appear personally at the adjudicative proceeding or, if otherwise approved by the presiding officer, by telephone, unless appearance is waived as authorized in WAC 246-10-104(4).

(d) The application for adjudicative proceeding shall contain a response to the initiating documents, indicating whether each charge is admitted, denied, or not contested, and responses shall be subject to the following conditions:

(i) Once admitted or not contested, an allegation may not be denied; and

(ii) An allegation denied or not contested may later be admitted.

(e) When an allegation is admitted or not contested, it shall be conclusively deemed to be true for all further proceedings. No proof of the allegation need be submitted.

(f) The application for adjudicative proceeding shall specify the representative, if any, designated pursuant to WAC 246-10-108 and any request for interpreter. The responding party shall amend the name of the representative and need for interpreter immediately if circumstances change prior to the hearing.

(g) The application for adjudicative proceeding shall be filed at the adjudicative clerk office at the address specified in WAC 246-10-102.

(2) A respondent may waive an adjudicative proceeding and submit a written statement and other documents in defense or in mitigation of the charges. Such waiver and documents shall be filed:

(a) In accordance with the timelines in subsection (1)(a) of this section; and

(b) At the address indicated in subsection (1)(g) of this section.

(3) For matters under RCW 18.130.180, if the twenty-day limit for filing an application for adjudicative proceeding results in a hardship to the respondent, the respondent may request an extension of not more than sixty days upon a showing of good cause.

(a) The request for extension shall be filed within the twenty day limit and shall include:

(i) The reason for the request and the number of days for which the extension is requested; and

(ii) Documentation of the circumstances creating the hardship.

(b) The request shall be granted for a period not to exceed sixty days upon showing of:

(i) Illness of the respondent; or

(ii) Absence of the respondent from the county of residence or employment; or

(iii) Emergency in the respondent's family; or

(iv) Other good cause as determined by the presiding officer.

(c) If a request for extension is denied, the respondent shall have ten days from service of the order denying the extension or twenty days from service of the initiating documents, whichever is longer, to file an application for adjudicative proceeding.

[Statutory Authority: RCW 18.155.040. 97-12-089, § 246-10-203, filed 6/4/97, effective 7/5/97. Statutory Authority: RCW 43.70.040. 94-04-079, § 246-10-203, filed 1/31/94, effective 3/3/94; 93-13-005 (Order 369), § 246-10-203, filed 6/3/93, effective 7/4/93.]

WAC 246-10-204 Default. (1) If a party fails to respond to initiating documents according to WAC 246-10-203, that party will be deemed to have waived the right to a hearing, and the secretary shall enter a final order without further contact with that party.

(2) If a party requests an adjudicative proceeding but fails to appear, without leave to do so, at a scheduled prehearing conference, the presiding officer may issue an order of default. The order shall include notice of opportunity to request that the default order be vacated pursuant to RCW 34.05.440(3). Unless vacated, a default order under this subsection shall be grounds for the presiding officer to proceed to decide the matter in the absence of the respondent and without additional notice to the respondent and to issue a final order.

(3) If a party requests an adjudicative proceeding but fails to appear at the hearing, the presiding officer may issue an order of default in the same manner as subsection (2) of this section, or may proceed to hear the matter in the absence of the party and issue a final order.

(4) Final orders entered under this section shall meet the requirements of WAC 246-10-702 and shall contain:

(a) Findings of fact and conclusions of law based upon prima facie proof of the allegations contained in the initiating documents;

(b) Proof of service of or a good faith attempt to serve initiating documents and appropriate notices;

(c) A finding that there is no reason to believe that the party in default is in active military service;

(d) The penalties or conditions imposed by the order; and

(e) Notice of the opportunity to request reconsideration pursuant to RCW 34.05.470.

(5) Final and default orders entered under this section shall be served upon the parties in accordance with WAC 246-10-109.

(6) Notwithstanding subsections (1) through (5) of this section, if a party fails to respond to an initiating document issued consistent with the requirements of RCW 43.70.095 or 43.70.115, the initiating document shall become a final order upon its effective date unless the initiating document otherwise provides.

[Statutory Authority: RCW 18.130.050 and 43.70.040. 96-21-027, § 246-10-204, filed 10/7/96, effective 11/7/96. Statutory Authority: RCW 43.70.-040. 94-04-079, § 246-10-204, filed 1/31/94, effective 3/3/94; 93-13-005 (Order 369), § 246-10-204, filed 6/3/93, effective 7/4/93.]

WAC 246-10-205 Scheduling orders. (1) Within thirty days after receipt of the application for adjudicative proceeding, the office of professional standards, or other designee of the secretary, shall:

(a) Approve the application for full adjudicative procedure and issue and serve on the parties a scheduling order specifying the course of the proceeding; or

(b) Approve the application for a brief adjudicative procedure and issue and serve a notice of the date by which any additional written materials are to be submitted for consideration; or

(c) Deny the application according to RCW 34.05.416.

(2) For matters under chapter 18.130 RCW, the scheduling order shall contain:

(a) The date, time, and place of a settlement conference, a prehearing conference, and the hearing;

(b) The deadlines for completion of discovery and submission of prehearing motions; and

(c) The name, address, and telephone number of the assistant attorney general or other department representative who will represent the state in the matter.

(3) The scheduling order may be modified by order of the presiding officer upon his/her own initiative or upon motion of a party. Any request for a change in the scheduling order shall be made by motion as provided in WAC 246-10-403.

(4) The presiding officer may waive establishing dates for the settlement conference, completion of discovery, submission of prehearing motions, and the prehearing conference, if, in the discretion of the presiding officer, those proceedings are not necessary or appropriate in a particular matter or type of case. However, either party may request by motion to the presiding officer that any or all of the dates be set.

(5) Dates contained in the scheduling order may be changed by the adjudicative clerk office upon written request of either party made within fifteen days of issuance of the first scheduling order. All other changes must be made by motion pursuant to WAC 246-10-403.

[Statutory Authority: RCW 18.155.040. 97-12-089, § 246-10-205, filed 6/4/97, effective 7/5/97. Statutory Authority: RCW 43.70.040. 94-04-079, § 246-10-205, filed 1/31/94, effective 3/3/94; 93-13-005 (Order 369), § 246-10-205, filed 6/3/93, effective 7/4/93.]

SECTION III
EMERGENCY ADJUDICATIVE PROCEEDINGS

WAC 246-10-301 Conduct of emergency adjudicative proceedings. (1) Summary action may be taken only after a review by the secretary or designee of such evidence, including affidavits, if appropriate, to establish:

(a) The existence of an immediate danger to the public health, safety, or welfare;

(b) The department's ability to address the danger through a summary action; and

(c) The summary action necessary to address the danger.

(2) No notice to any person potentially affected by a summary action shall be required prior to issuance of a summary action.

[Statutory Authority: RCW 43.70.040. 93-13-005 (Order 369), § 246-10-301, filed 6/3/93, effective 7/4/93.]

WAC 246-10-302 Effect of summary action. (1) Summary action takes effect upon entry of the order. Entry shall be the date of signature unless otherwise specified.

(2) No person shall be required to comply with a summary action until service has been made or the person has knowledge of the order, whichever occurs first.

(3) A summary action shall be served as promptly as practicable, in accordance with WAC 246-10-109.

(4) A summary action shall not be subject to the post-hearing process provided in WAC 246-10-701, et seq., but a summary action may be appealed to superior court as provided by law.

[Statutory Authority: RCW 43.70.040. 93-13-005 (Order 369), § 246-10-302, filed 6/3/93, effective 7/4/93.]

WAC 246-10-303 Form and content of summary actions. (1) A summary action shall be entered in the form of an order containing findings of fact, conclusions of law, and the summary action imposed, as well as a statement of policy reasons for the decision.

(2) A summary action imposed by emergency adjudicative proceeding shall be limited to those actions necessary to alleviate an immediate danger to the public health, safety, or welfare.

(3) Initiating documents, and all other documents required by WAC 246-10-201, shall accompany a summary action order when served.

[Statutory Authority: RCW 43.70.040. 93-13-005 (Order 369), § 246-10-303, filed 6/3/93, effective 7/4/93.]

WAC 246-10-304 Adjudicative proceedings upon summary action. Following summary action taken by the department, the respondent may:

(1) Request a prompt adjudicative proceeding conducted in accordance with this chapter; or

(2) Waive the prompt adjudicative proceeding and request a regularly scheduled adjudicative proceeding conducted in accordance with this chapter;

(3) Waive the right to an adjudicative proceeding and submit a written statement to be considered prior to the entry of the final order; or

(4) Waive the opportunity to be heard.

[Statutory Authority: RCW 43.70.040. 94-04-079, § 246-10-304, filed 1/31/94, effective 3/3/94; 93-13-005 (Order 369), § 246-10-304, filed 6/3/93, effective 7/4/93.]

WAC 246-10-305 Opportunity for prompt adjudicative proceeding. (1) Any respondent affected by a summary action shall be provided the opportunity to request a prompt adjudicative proceeding. Notice of the opportunity shall be provided in the notice of opportunity to defend against the allegations that are the basis for the summary action. The form for requesting an adjudicative proceeding shall include the option of requesting a prompt adjudicative proceeding.

(2) Any respondent affected by a summary action may request a prompt adjudicative proceeding, may elect a regularly scheduled adjudicative proceeding instead of a prompt adjudicative proceeding, or may waive the opportunity for adjudicative proceeding in accordance with WAC 246-10-203.

(3) Any request for a prompt adjudicative proceeding must be filed within ten days of the service of the summary action.

(4) If requested by the respondent, a prompt adjudicative proceeding shall be conducted within twenty days of service of a summary action.

(5) Regardless of whether a prompt adjudicative proceeding is requested, the matter shall be resolved as quickly as feasible in accordance with all other applicable rules.

[Statutory Authority: RCW 43.70.040. 94-04-079, § 246-10-305, filed 1/31/94, effective 3/3/94; 93-13-005 (Order 369), § 246-10-305, filed 6/3/93, effective 7/4/93.]

WAC 246-10-306 Proceedings prior to prompt adjudicative proceeding. A settlement conference may be requested, a settlement may be offered, and a prehearing conference may be conducted prior to a prompt adjudicative proceeding. Prehearing proceedings shall not delay a prompt adjudicative proceeding except by mutual agreement of the parties.

[Statutory Authority: RCW 43.70.040. 93-13-005 (Order 369), § 246-10-306, filed 6/3/93, effective 7/4/93.]

SECTION IV
SETTLEMENT AND PREHEARING PROCEEDINGS

WAC 246-10-401 Settlement conference. (1) Following a request for an adjudicative proceeding, a settlement conference may be scheduled as provided in WAC 246-10-205. The parties shall be notified of the date, time, and place of the settlement conference.

(2) The purpose of the settlement conference shall be to attempt to reach agreement on the issues and on a proposed order to be entered. Any agreement of the parties is subject to final approval by the presiding officer.

(3) The respondent shall attend the settlement conference as scheduled and may also be represented as provided in WAC 246-10-108. Representatives of the department will also attend. Other persons may attend by agreement of the parties.

(4) Either party may bring documents or other materials to the settlement conference for the purpose of settlement negotiations. No testimony will be taken. No documents or information submitted at the settlement conference will be admitted at the adjudicative proceeding unless stipulated by the parties or otherwise admitted into evidence by the presiding officer.

(5) If a settlement offer has been made in writing to the respondent and it is signed and returned by the respondent to the adjudicative clerk office prior to the settlement conference, all subsequent dates set in the scheduling order are continued pending final review of the settlement by the presiding officer.

[Statutory Authority: RCW 18.155.040. 97-12-089, § 246-10-401, filed 6/4/97, effective 7/5/97. Statutory Authority: RCW 43.70.040. 94-04-079, § 246-10-401, filed 1/31/94, effective 3/3/94; 93-13-005 (Order 369), § 246-10-401, filed 6/3/93, effective 7/4/93.]

WAC 246-10-402 Discovery. The parties are encouraged to exchange information and documents related to the case prior to the adjudicative proceeding. Formal discovery is obtained as follows:

(1) Methods, scope and limits:

(a) Parties may obtain discovery by production of records or things; deposition upon oral examination; requests for admission; or, if ordered by the presiding officer, written interrogatories.

(b) Unless otherwise limited by order of the presiding officer in accord with these rules, the scope of discovery shall be as follows:

(i) Parties may obtain discovery regarding any matter not privileged, which is relevant to the subject matter in the pending action. It is not grounds for objection that the information sought will be inadmissible at the adjudicative proceeding if the information sought appears reasonably calculated to lead to the discovery of admissible evidence.

(ii) The frequency or extent of use of the discovery methods set forth in these rules shall be limited by the presiding officer if the presiding officer determines that:

(A) The discovery sought is unreasonably cumulative or duplicative, or is obtainable from another source that is more convenient, less burdensome, or less expensive; or

(B) The party seeking discovery has had an ample opportunity by discovery to obtain the information sought; or

(C) The discovery is unduly burdensome or expensive, taking into account the needs of the case, limitations of the parties' resources, and the importance of the issues at stake.

(iii) The presiding officer may limit discovery upon his or her own initiative after reasonable notice or pursuant to a motion submitted by a party.

(2) Production of records, documents or things:

(a) Upon written request of a party the opposing party shall identify experts and other witnesses to be called at a hearing and shall provide other information necessary to enable the party to conduct depositions of the witnesses.

(b) Any party may serve on any other party a request, which must be signed by the party or designated representative:

(i) To produce and permit the party making the request or designee to inspect and copy any designated documents, or to inspect and copy, test, or sample any tangible things which constitute or contain matters within the scope of discovery and which are in the possession, custody or control of the party upon whom the request is served; or

(ii) To permit entry onto designated land or other property which is in the possession or control of the party upon whom the request is served for the purpose of inspection, measuring, surveying, photographing, testing or sampling the property or designated object or operation thereon which is within the scope of discovery.

(c) Any party who produces documents for inspection shall produce them as they are kept in the usual course of business or may, if the parties agree, organize and label them to correspond with the categories in the request.

(d) The party upon whom a request is made may, by motion to the presiding officer, move for an order denying the request to produce or modifying the conditions of the request. Denial of the request or change in the conditions of the request shall be within the discretion of the presiding officer and shall be made by written order.

(3) Depositions may be taken subject to the following conditions:

(a) Within the United States or a territory or insular possession subject to the dominion of the United States, depositions shall be taken before an officer authorized to administer oaths by the state of Washington or of the place where the examination is held. A presiding officer may, in his or her discretion or following motion of a party, preside at the deposition. Within a foreign country, depositions shall be taken before a secretary of an embassy or legation, consul general, vice-consul or consular agent of the United States, or a person designated by the presiding officer or agreed upon by the parties by stipulation in writing filed with the office of professional standards. Except by stipulation, no deposition shall be taken before any person who is a party or a privy of a party, or a privy of any representative of a party, or who is financially interested in the proceeding.

(b) A party desiring to take the deposition of a person upon oral examination shall give reasonable notice of not less than five days in writing to the person to be deposed and to the opposing party. The notice shall state the time and place for taking the deposition, the name and address of each person to be examined, if known, and if the name is not known, a description sufficient to identify the person to be examined or the particular class or group to which the person to be examined belongs. On motion of a party upon whom the notice is served, the presiding officer may for cause shown, lengthen or shorten the time.

(c) After notice is served for taking a deposition, or upon motion of the presiding officer or upon motion reasonably made by any party or by the person to be examined, and upon notice and for good cause, the presiding officer may issue an order that the deposition shall not be taken or that it be taken subject to specified restrictions, conditions, or limitations.

(d) Depositions shall be recorded.

(i) The officer before whom the deposition is taken shall put the witness on oath or affirmation and shall personally or by someone acting under the officer's direction and in the officer's presence, record the testimony.

(ii) The officer or person acting under the officer's direction shall transcribe the testimony at the request of any party, provided that any expenses shall be paid by the requesting party.

(iii) The transcribed testimony shall be submitted to the person deposed for review and signature, unless review and signature are waived by that person. The officer shall append to the transcript any changes in form or substance that may be submitted by the parties.

(iv) Copies of the transcribed and, unless review and signature has been waived, signed testimony shall be served upon the person deposed and upon the parties.

(e) If the parties so stipulate in writing or on the record, depositions may be taken before any person, at any time or place, upon any notice, and in any manner and when so taken, may be used as any other deposition.

(4) Following motion of a party and opportunity for response by the opposing party, the presiding officer may order a party to respond to written interrogatories and may order that the interrogatories be subject to specified restriction, condition, or limitation.

[Statutory Authority: RCW 43.70.040. 94-04-079, § 246-10-402, filed 1/31/94, effective 3/3/94; 93-13-005 (Order 369), § 246-10-402, filed 6/3/93, effective 7/4/93.]

WAC 246-10-403 Motions. (1) The presiding officer shall rule on motions. The presiding officer may rule on motions without oral argument or may request or permit the parties to argue the motion in person or by telephone. Oral argument may be limited in time at the discretion of the presiding officer.

(2) All prehearing motions, including discovery and evidentiary motions, shall be made in writing and filed with the adjudicative clerk office prior to the dates set in the scheduling order.

(3) Motions for continuance must be made in writing and filed prior to the dates set in the scheduling order. If the adjudicative proceeding is scheduled to take place fewer than twenty days from service of the scheduling order, motions for continuance must be made within ten days of service of the scheduling order, but in no event fewer than five days prior to the hearing. Continuances may be granted by the presiding officer for good cause.

(4) The presiding officer may grant a continuance when a motion for continuance is not submitted within the time limits contained in subsection (3) of this section for good cause.

(5) The following is the recommended format for motions:

(a) A succinct statement of the facts contended to be material;

(b) A concise statement of the issue, issues or law upon which the presiding officer is requested to rule;

(c) The specific relief requested by the moving party;

(d) If the motion requires the consideration of facts or evidence not appearing on the record, the moving party shall also serve and file copies of all affidavits and photographic or documentary evidence presented in support of the motion;

(e) The legal authority upon which the motion is based; and

(f) A proposed order may accompany the motion, and should contain findings of fact and conclusions of law.

(6) The moving party shall file the motion, and the accompanying affidavits and photographic or documentary evidence when necessary, with the adjudicative clerk office and shall serve the motion, and the accompanying affidavits and photographic or documentary evidence when necessary, on all other parties.

(7) The opposing party shall file with the adjudicative clerk office, and serve upon the moving party, a responsive memorandum, and accompanying affidavits and photographic or documentary evidence when necessary, no later than eleven days following service of the motion, unless otherwise ordered by the presiding officer.

(8) The moving party may file with the adjudicative clerk office, and serve upon the opposing party, a reply memorandum no later than five days following service of the responsive memorandum, unless otherwise ordered by the presiding officer.

(9) Unless otherwise ordered by the presiding officer, all motions shall be decided without oral argument. A party requesting oral argument on a motion shall so indicate by typing "ORAL ARGUMENT REQUESTED" in the caption of the motion or the responsive memorandum. If a request for oral argument is granted, the presiding officer shall notify the parties of the date and time of the argument and whether the argument will be in person or by telephone conference.

(10) Motions to shorten time or emergency motions shall be exceptions to the rule, and a party may only make such motions in exigent or exceptional circumstances. When making such a motion, the moving party shall:

(a) Suggest a date and time when the moving party seeks to have the presiding officer hear the motion to shorten time, which should be at least forty-eight hours after filing;

(b) Suggest a date and time when the moving party seeks to have the presiding officer consider the merits of the underlying motion;

(c) Describe the exigent or exceptional circumstances justifying shortening of time in an affidavit or a memorandum accompanying the motion;

(d) Certify that the motion to shorten time and the underlying motion have been served on all other parties prior to the filing of the motion with the presiding officer. Any opposition to the motion to shorten time must be served and filed within twenty-four hours of the service of the motion. If the presiding officer grants the motion to shorten time, the presiding officer shall notify the parties of the date by which the responsive memorandum to the underlying motion shall be served and filed.

(11) All motions will be decided as soon as practical, but not more than thirty days following the filing of the motion. If the presiding officer will not decide the motion within this time, the presiding officer shall notify the parties in writing of the date by which the motion will be decided.

(12) If a party serves a motion or responsive memorandum by mail, pursuant to WAC 246-10-109, then three days shall be added to the time within which the opposing party must file and serve the responsive or reply memorandum.

(13) All computations of time shall be calculated pursuant to WAC 246-10-105.

(14) Departmental motions for summary actions are exempted from all requirements of this rule.

[Statutory Authority: RCW 18.155.040. 97-12-089, § 246-10-403, filed 6/4/97, effective 7/5/97. Statutory Authority: RCW 18.130.050 and 43.70.-040. 96-21-027, § 246-10-403, filed 10/7/96, effective 11/7/96. Statutory Authority: RCW 43.70.040. 94-04-079, § 246-10-403, filed 1/31/94, effective 3/3/94; 93-13-005 (Order 369), § 246-10-403, filed 6/3/93, effective 7/4/93.]

WAC 246-10-404 Prehearing conference. (1) As provided in WAC 246-10-205, the presiding officer may schedule a prehearing conference to be held prior to the hearing. Parties shall be notified of the time and place of the first prehearing conference in the scheduling order.

(2) The presiding officer shall conduct prehearing conferences and shall issue rulings related to prehearing motions and evidentiary issues. The rulings shall govern the conduct of subsequent proceedings.

(3) The prehearing conference may be recorded as ordered by the presiding officer. All offers of proof and objections concerning matters raised at the prehearing conference must be made on the record at the prehearing conference.

(4) Following the final prehearing conference, the presiding officer shall issue a written prehearing order which will:

(a) Identify the issues to be considered at the hearing and indicate which party has the burden of proof on these issues;

(b) Specify the facts which are admitted or not contested by the parties;

(c) Identify those documents and exhibits that will be admitted at hearing;

(d) Identify expert and lay witnesses that may be called at hearing and the issues to which those witnesses may testify;

(e) Rule on motions;

(f) Accept amendments to the pleadings;

(g) Address such other issues or matters as may be reasonably anticipated to arise and which may aid in the disposition of the proceedings; and

(h) Rule on objections made in any preserved testimony.

(5) Following the prehearing conference, the presiding officer may issue an order directing that the matter be heard as a brief adjudicative proceeding, pursuant to WAC 246-10-501, et seq.

(6) Documentary evidence not offered in the prehearing conference shall not be received into evidence at the adjudicative proceeding in the absence of a clear showing that the offering party had good cause for failing to produce the evidence at the prehearing conference.

(7) Witnesses not identified during the prehearing conference shall not be allowed to testify at the adjudicative proceeding in the absence of a clear showing that the party offering the testimony of such witness had good cause for failing to identify the witness at the prehearing conference.

(8) If the authenticity of documents submitted at the prehearing conference is not challenged at the prehearing conference, the documents shall be deemed authentic. However, a party shall be permitted to challenge such authenticity at a later time upon a clear showing of good cause for failure to object at the prehearing conference.

(9) Nothing in these rules shall prohibit the presiding officer from conducting a conference at any time, including during the hearing. The presiding officer shall state on the record the results of such conference.

(10) A party bound by a stipulation or admission of record may withdraw it in whole or in part only upon a determination by the presiding officer or hearing officer that:

(a) The stipulation or admission was made inadvertently or as a bona fide mistake of fact or law; and

(b) The withdrawal will not unjustly prejudice the rights of the other parties.

(11) In an appeal to superior court involving issues addressed in the prehearing order, the record of the prehearing conference, written motions and responses, the prehearing order, and any orders issued by the presiding officer pursuant to WAC 246-10-403, shall be the record.

[Statutory Authority: RCW 43.70.040. 94-04-079, § 246-10-404, filed 1/31/94, effective 3/3/94; 93-13-005 (Order 369), § 246-10-404, filed 6/3/93, effective 7/4/93.]

WAC 246-10-405 Protective orders. The presiding officer may issue a protective order at his or her discretion:

(1) To protect a party or person from annoyance, embarrassment, oppression, or undue burden or expense;

(2) To preserve confidentiality related to health care records or provider-client information;

(3) To protect examination processes;

(4) To protect the identity of a person supplying information to the department where the person indicates a desire for nondisclosure unless that person testifies or has been called to testify at an adjudicative proceeding; or

(5) To comply with applicable state or federal law.

[Statutory Authority: RCW 43.70.040. 93-13-005 (Order 369), § 246-10-405, filed 6/3/93, effective 7/4/93.]

SECTION V
BRIEF ADJUDICATIVE PROCEEDINGS

WAC 246-10-501 Application of brief adjudicative proceedings. (1) If an adjudicative proceeding is requested, a brief adjudicative proceeding will be conducted where the matter involves one or more of the following:

(a) A determination whether an applicant for a professional, business, or facility license meets the minimum criteria for an unrestricted license and the department proposes to deny such a license or to issue a restricted license;

(b) An application to approve a water system plan under WAC 246-290-100;

(c) An application to approve a project report under WAC 246-290-110;

(d) An application for source approval under WAC 246-290-130;

(e) An application to approve construction documents under WAC 246-290-120;

(f) An application to approve an existing Group A water system under WAC 246-290-140;

(g) An application for source approval under WAC 246-291-100 or 246-291-110;

(h) An application to approve a design report under WAC 246-291-120;

(i) An application to approve an existing Group B water system under WAC 246-291-130;

(j) An application to approve a water system plan under WAC 246-291-140;

(k) A decision under WAC 246-293-190;

(l) A decision with respect to service area conflicts under WAC 246-293-430;

(m) An application for approval as a satellite management agency under WAC 246-295-040;

(n) A civil penalty imposed under RCW 70.119A.040 when the amount of the civil penalty does not exceed two thousand five hundred dollars;

(o) A request to bank nursing home beds under RCW 70.38.111(8) and 70.38.115(13);

(p) A determination as to whether a person is in compliance with the terms and conditions of a final order previously issued by the department;

(q) Any approval of a school or curriculum when such approval by the department is required or authorized by statute or rule;

(r) A determination whether a license holder requesting renewal has submitted all required information and meets minimum criteria for license renewal; or

(s) A decision to deny, modify, or impose conditions upon an operating permit under WAC 246-294-050.

(2) If an adjudicative proceeding is requested, in a matter not listed in subsection (1) of this section, a brief adjudicative proceeding may be conducted in the discretion of the presiding officer when it appears that protection of the public interest does not require that the department provide notice and an opportunity to participate to persons other than the parties and:

(a) Only legal issues exist; or

(b) Both parties have agreed to a brief proceeding.

[Statutory Authority: RCW 18.130.050 and 43.70.040. 96-21-027, § 246-10-501, filed 10/7/96, effective 11/7/96. Statutory Authority: RCW 43.70.-040. 94-04-079, § 246-10-501, filed 1/31/94, effective 3/3/94; 93-13-005 (Order 369), § 246-10-501, filed 6/3/93, effective 7/4/93.]

WAC 246-10-502 Preliminary record in brief adjudicative proceedings. (1) The preliminary record with respect to an application for a professional, business, or facility license, or for approval of a school or curriculum shall consist of the following:

(a) The application for the license or approval and all associated documents;

(b) All documents relied on by the program in proposing to deny the application;

(c) All correspondence between the applicant for license or approval and the program regarding the application.

(2) Preliminary record.

(a) The preliminary record with respect to decisions made under WAC 246-290-100, 246-290-110, 246-290-120, 246-290-130, 246-290-140, 246-291-100, 246-291-110, 246-291-120, 246-291-130, and 246-291-140 shall consist of the

decision document, all documents constituting the applicant's submittal and such other documents as the applicant or the departmental employee reviewing the submittal may wish to include in the preliminary record.

(b) WAC 246-293-190.

(i) If proceedings are required and have been conducted by local agencies under the applicable coordinated water system plan, the preliminary record shall consist of the record submitted to the department under WAC 246-10-124(3).

(ii) If hearings are not required or have not been conducted by local agencies under the applicable coordinated water system plan or if the external boundaries of the coordination act area have been approved but a coordinated water system plan has not been adopted, then the preliminary record shall consist of such documents as the presiding officer may solicit from the affected parties.

(c) The preliminary record with respect to a decision made under WAC 246-293-430 shall consist of the record submitted to the presiding officer under WAC 246-10-124(4).

(d) The preliminary record with respect to a decision under WAC 246-294-050 shall consist of:

(i) The permit, if any;

(ii) All documents relied upon by the program in proposing to deny, modify, or impose conditions upon the permit; and

(iii) The decision document.

(e) The preliminary record with respect to decisions made under WAC 246-295-040 shall consist of the decision document, all documents constituting the applicant's submittal, comments submitted by the county, and such other documents as the applicant or the department may wish to include in the preliminary record.

(f) The preliminary record with respect to civil penalties imposed under RCW 70.119A.040 shall consist of the notice of imposition of penalties, the departmental order, if any, all documentation of communication between the program and the person or persons incurring the civil penalties regarding the violation or violations for which the civil penalties were imposed, and such other documents as the person or persons incurring the civil penalties or the department may wish to include in the preliminary record.

(3) The preliminary record with respect to compliance with prior department orders shall consist of:

(a) The official department file of the proceeding in which the order was issued;

(b) All matters submitted by the person to whom the order is directed purporting to demonstrate compliance with the order;

(c) All documents relied on by the department in asserting noncompliance; and

(d) All correspondence between the department and the person to whom the order is directed respecting compliance.

(4) The preliminary record with respect to matters submitted to a brief adjudicative proceeding under WAC 246-10-501(2) shall be as agreed by the parties.

(5) For the purposes of this section, "decision document" shall mean one or more documents that provide notice to the affected party of the department's action, and that contain(s) the information provided by an initiating document.

[Statutory Authority: RCW 18.130.050 and 43.70.040. 96-21-027, § 246-10-502, filed 10/7/96, effective 11/7/96. Statutory Authority: RCW 43.70.-040. 94-04-079, § 246-10-502, filed 1/31/94, effective 3/3/94; 93-13-005 (Order 369), § 246-10-502, filed 6/3/93, effective 7/4/93.]

WAC 246-10-503 Conduct of brief adjudicative proceedings. (1) Brief adjudicative proceedings shall be conducted by a presiding officer for brief adjudicative proceedings designated by the assistant secretary having responsibility for the program that issued the initiating document that is the subject of the proceeding. The presiding officer for brief adjudicative proceedings shall have agency expertise in the subject matter but shall not have personally participated in the decision to issue the initiating document.

(2) The parties or their representatives may present written documentation in addition to the preliminary record. The presiding officer for brief adjudicative proceedings shall designate the date by which written documents must be submitted by the parties.

(3) The presiding officer for brief adjudicative proceedings may, in his or her discretion, entertain oral argument from the parties or their representatives, at a time and place designated by the presiding officer for brief adjudicative proceedings.

(4) No witnesses may appear to testify.

(5) In addition to the record, the presiding officer for brief adjudicative proceedings may employ agency expertise as a basis for decision.

(6) The presiding officer for brief adjudicative proceedings shall not issue an oral order. Within ten days of the final date for submission of materials or oral argument, if any, the presiding officer for brief adjudicative proceedings shall enter an initial order in accordance with WAC 246-10-608.

[Statutory Authority: RCW 18.130.050 and 43.70.040. 96-21-027, § 246-10-503, filed 10/7/96, effective 11/7/96. Statutory Authority: RCW 43.70.-040. 94-04-079, § 246-10-503, filed 1/31/94, effective 3/3/94; 93-13-005 (Order 369), § 246-10-503, filed 6/3/93, effective 7/4/93.]

WAC 246-10-504 Effectiveness of orders on brief adjudicative proceedings. (1) Initial orders on brief adjudicative proceedings shall become final twenty-one days after service of the initial order unless:

(a) Administrative review has been requested pursuant to WAC 246-10-701; or

(b) On his or her own initiative, a designee of the secretary authorized to issue final orders determines to review the matter and, within twenty-one days of service of the initial order, provides notice to the parties of the date by which a determination shall be made.

(2) If administrative review is taken under subsection (1) of this section, each party shall be provided an opportunity to state its view of the matter, and the presiding officer shall issue a written order containing findings of fact, conclusions of law, and order which shall be entered and served upon the parties within twenty days of service of the initial order or the request for review whichever is later.

(3) A request for review is deemed to be denied if the presiding officer does not act on the request within twenty days after the request is submitted.

(4) If administrative review is taken under subsection (1) of this section, the presiding officer may convert the matter to a full adjudicative proceeding.

[Statutory Authority: RCW 43.70.040. 94-04-079, § 246-10-504, filed 1/31/94, effective 3/3/94; 93-13-005 (Order 369), § 246-10-504, filed 6/3/93, effective 7/4/93.]

WAC 246-10-505 Agency record in brief proceedings. The agency record of brief adjudicative proceedings shall consist of:

(1) The preliminary record as set forth in WAC 246-10-502;

(2) All initiating documents including the notice of opportunity to defend;

(3) The request for adjudicative proceeding;

(4) All documents submitted in the proceeding;

(5) Any transcript or recording of any arguments presented; and

(6) All orders issued in the case.

[Statutory Authority: RCW 43.70.040. 93-13-005 (Order 369), § 246-10-505, filed 6/3/93, effective 7/4/93.]

SECTION VI
HEARING

WAC 246-10-601 Notice of adjudicative proceeding. Notice of an adjudicative proceeding shall be issued pursuant to RCW 34.05.434.

[Statutory Authority: RCW 43.70.040. 93-13-005 (Order 369), § 246-10-601, filed 6/3/93, effective 7/4/93.]

WAC 246-10-602 Conduct of adjudicative proceeding. (1) The adjudicative proceeding shall be conducted as provided in RCW 34.05.449 through 34.05.455.

(2) The presiding officer may take the following actions to the extent not already determined in a prehearing order:

(a) Conduct the hearing de novo;

(b) Determine the order of presentation of evidence;

(c) Administer oaths and affirmations;

(d) Issue subpoenas;

(e) Rule on procedural matters, objections, motions, and offers of proof;

(f) Receive relevant evidence;

(g) Interrogate witnesses called by the parties in an impartial manner to develop any facts necessary to fairly and adequately decide the matter;

(h) Call additional witnesses and request additional exhibits deemed necessary to complete the record and receive such evidence subject to full opportunity for cross-examination and rebuttal by all parties;

(i) Take any appropriate action necessary to maintain order during the adjudicative proceeding;

(j) Determine whether to permit or require oral argument or briefs and determine the time limits for submission thereof;

(k) Permit photographic and recording equipment at hearing subject to conditions necessary to preserve confidentiality and prevent disruption;

(l) Permit a person to waive any right conferred upon that person by chapter 34.05 RCW or this chapter, except as precluded by law; and

(m) Take any other action necessary and authorized by applicable law or rule.

(3) The presiding officer shall:

(a) Apply as the first source of law governing an issue those statutes and rules deemed applicable to the issue;

(b) If there is no statute or rule governing the issue, resolve the issue on the basis of the best legal authority and reasoning available, including that found in federal and Washington constitutions, statutes, rules, and court decisions; and

(c) Not declare any statute or rule invalid.

(4) If the validity of any statute or rule is raised as an issue, the presiding officer may permit arguments to be made on the record concerning the issue for the purpose of subsequent review.

(5) A party may move to disqualify the presiding officer pursuant to RCW 34.05.425(3).

[Statutory Authority: RCW 43.70.040. 93-13-005 (Order 369), § 246-10-602, filed 6/3/93, effective 7/4/93.]

WAC 246-10-603 Evidence. (1) The presiding officer shall rule on objections to the admissibility of evidence pursuant to RCW 34.05.452 unless those objections have been addressed in the prehearing order.

(2) The refusal of a witness to answer any question ruled proper shall be grounds for the presiding officer, at his/her discretion, to strike some or all prior testimony by that witness on related matters or to grant a continuance to allow a party to seek a court order to compel the witness to answer.

(3) Each person called as a witness in an adjudicative proceeding shall swear or affirm that the evidence about to be given in the adjudicative proceeding shall be the truth under the provisions of RCW 5.28.020 through 5.28.060.

[Statutory Authority: RCW 43.70.040. 93-13-005 (Order 369), § 246-10-603, filed 6/3/93, effective 7/4/93.]

WAC 246-10-604 Proposed order. At the conclusion of the hearing or by a date specified by the presiding officer, the presiding officer may require each party to submit to the presiding officer proposed findings of fact and conclusions of law and a proposed order.

[Statutory Authority: RCW 43.70.040. 94-04-079, § 246-10-604, filed 1/31/94, effective 3/3/94; 93-13-005 (Order 369), § 246-10-604, filed 6/3/93, effective 7/4/93.]

WAC 246-10-605 Issuance of final order. If the adjudicative proceeding is conducted by a presiding officer authorized to make the final decision, the presiding officer shall:

(1) Issue a final order containing findings of fact and conclusions of law and an order; and

(2) Cause the adjudicative clerk office to serve a copy of the order on each party and any designated representative of the party.

[Statutory Authority: RCW 18.155.040. 97-12-089, § 246-10-605, filed 6/4/97, effective 7/5/97. Statutory Authority: RCW 43.70.040. 93-13-005 (Order 369), § 246-10-605, filed 6/3/93, effective 7/4/93.]

WAC 246-10-606 Standard of proof. (1) The order shall be based on the kind of evidence upon which reasonably prudent persons are accustomed to rely in the conduct of their affairs.

(2) In all cases involving an application for license the burden shall be on the applicant to establish that the applica-

tion meets all applicable criteria. In all other cases the burden is on the department to prove the alleged factual basis set forth in the initiating document.

(3) Except as otherwise required by law, the burden in all cases is a preponderance of the evidence.

[Statutory Authority: RCW 18.130.050 and 34.05.220. 08-14-137, § 246-10-606, filed 7/1/08, effective 8/1/08. Statutory Authority: RCW 43.70.040. 93-13-005 (Order 369), § 246-10-606, filed 6/3/93, effective 7/4/93.]

WAC 246-10-607 Consolidated proceedings. (1) When two or more applications for adjudicative proceeding involve a similar issue, the applications may be consolidated by the presiding officer and the hearings conducted together. The presiding officer may consolidate on his/her own motion or upon the request of a party.

(2) A party scheduled for a consolidated proceeding may request to withdraw from the consolidated proceeding in favor of an individual proceeding. The presiding officer may grant a motion to withdraw from a consolidated proceeding at any time when good cause is shown.

(3) Each respondent in a consolidated proceeding shall retain the right to representation.

[Statutory Authority: RCW 43.70.040. 94-04-079, § 246-10-607, filed 1/31/94, effective 3/3/94; 93-13-005 (Order 369), § 246-10-607, filed 6/3/93, effective 7/4/93.]

WAC 246-10-608 Initial order. If the adjudicative proceeding is conducted by a presiding officer who is not authorized to make the final decision, the presiding officer shall:

(1) Issue an initial order containing proposed findings of fact, conclusions of law, and a proposed order;

(2) Cause the adjudicative clerk office to serve a copy of the initial order on each party and any designated representative of a party; and

(3) Forward the initial order and record of the adjudicative proceeding to the adjudicative clerk office.

[Statutory Authority: RCW 18.155.040. 97-12-089, § 246-10-608, filed 6/4/97, effective 7/5/97. Statutory Authority: RCW 43.70.040. 93-13-005 (Order 369), § 246-10-608, filed 6/3/93, effective 7/4/93.]

SECTION VII
POSTHEARING PROCESS

WAC 246-10-701 Appeal from initial order. (1) Any party may file a written petition for administrative review of an initial order issued under WAC 246-10-503 or 246-10-608 stating the specific grounds upon which exception is taken and the relief requested.

(2) Petitions for administrative review must be served upon the opposing party and filed with the adjudicative clerk office within twenty-one days of service of the initial order.

(3) The opposing party may file a response to a petition for administrative review filed as provided in this section. The response shall be filed at the adjudicative clerk office. The party filing the response shall serve a copy of the response upon the party requesting administrative review. If the initial order was entered pursuant to WAC 246-10-503, the response shall be filed within ten days of service of the petition. In all other matters, the response shall be filed within twenty days of service of the petition.

[Statutory Authority: RCW 18.155.040. 97-12-089, § 246-10-701, filed 6/4/97, effective 7/5/97. Statutory Authority: RCW 43.70.040. 94-04-079, § 246-10-701, filed 1/31/94, effective 3/3/94; 93-13-005 (Order 369), § 246-10-701, filed 6/3/93, effective 7/4/93.]

WAC 246-10-702 Final orders. (1) The form and content of final orders shall be as follows:

(a) Final orders shall contain findings of fact, conclusions of law, and an order, and shall be signed by the presiding officer.

(b) Final orders may adopt by reference the initial order in whole or in part.

(c) Final orders may modify or revise the initial order in whole or in part.

(2) Final orders shall be served upon the parties and their representatives as provided in WAC 246-10-109.

(3) Final orders shall be issued following:

(a) A review of the record;

(b) A review of the initial order, if any;

(c) A review of any request for administrative review of the initial order and any response thereto; and

(d) Consideration of protection of the public health and welfare.

(4) Unless a later date is stated in the final order, final orders shall be effective when entered but a party shall not be required to comply with a final order until the order is served upon that party.

(5) Final orders may contain orders that specified portions of the agency record shall not be disclosed as public records if necessary to protect privacy interests, the public welfare, or vital governmental functions. Such orders shall include but are not limited to protective orders issued during the proceeding or pursuant to WAC 246-10-405.

[Statutory Authority: RCW 43.70.040. 94-04-079, § 246-10-702, filed 1/31/94, effective 3/3/94; 93-13-005 (Order 369), § 246-10-702, filed 6/3/93, effective 7/4/93.]

WAC 246-10-703 Stay of final orders. No final order will be stayed except by its own terms or by order of a court of competent jurisdiction.

[Statutory Authority: RCW 43.70.040. 93-13-005 (Order 369), § 246-10-703, filed 6/3/93, effective 7/4/93.]

WAC 246-10-704 Reconsideration of final orders. (1) Within ten days of service of a final order, either party may file a petition for reconsideration, stating the specific grounds upon which reconsideration is requested and the relief requested.

(2) Grounds for reconsideration shall be limited to:

(a) Specific errors of fact or law; or

(b) Implementation of the final order would require department activities inconsistent with current department practice; or

(c) Specific circumstances render the person requesting reconsideration unable to comply with the terms of the order.

(3) Petitions for reconsideration must be served upon the opposing party and filed with the adjudicative clerk office within ten days of service of the final order.

(4) If reconsideration is requested based on an error of fact, the request for reconsideration shall contain specific reference to the record. If reconsideration is requested based on

testimony of record, the request for reconsideration shall contain specific reference to the testimony. The presiding officer may require that the party requesting reconsideration submit a copy of the transcript of the adjudicative proceeding and provide specific reference to the transcript.

(5) The petition for reconsideration is denied if, within twenty days of the date the petition is filed, the presiding officer:

(a) Denies the petition;

(b) Does not act upon the petition; or

(c) Does not serve the parties with notice of the date by which he/she will act on the petition.

(6) If the presiding officer determines to act upon the petition, the opposing party shall be provided at least ten days in which to file a response to the petition.

(7) Disposition of petitions for reconsideration shall be in the form of a written order denying the petition, granting the petition, and dissolving or modifying the final order, or granting the petition and setting the matter for further proceedings.

[Statutory Authority: RCW 18.155.040. 97-12-089, § 246-10-704, filed 6/4/97, effective 7/5/97. Statutory Authority: RCW 43.70.040. 94-04-079, § 246-10-704, filed 1/31/94, effective 3/3/94; 93-13-005 (Order 369), § 246-10-704, filed 6/3/93, effective 7/4/93.]

WAC 246-10-705 Agency record of adjudicative proceedings. (1) The department shall maintain an official record of each adjudicative proceeding.

(2) The record shall include:

(a) Notices of all proceedings;

(b) Any prehearing order;

(c) Any motions, pleadings, briefs, petitions, and requests filed, and rulings thereon;

(d) Evidence received or considered;

(e) A statement of matters officially noted;

(f) Offers of proof and objections and rulings thereon;

(g) Any proposed findings, requested orders, and exceptions;

(h) Any recording of the adjudicative proceeding and any transcript of all or part of the adjudicative proceeding considered before final disposition of the matter;

(i) Any final order, initial order, or order on reconsideration; and

(j) Matters placed on the record following an ex parte communication, if any.

(3) The record shall be subject to disclosure as provided by chapter 42.17 RCW, the Public Records Act, and by WAC 246-10-114, except as limited by protective orders and provisions contained in the final order.

[Statutory Authority: RCW 43.70.040. 94-04-079, § 246-10-705, filed 1/31/94, effective 3/3/94; 93-13-005 (Order 369), § 246-10-705, filed 6/3/93, effective 7/4/93.]

WAC 246-10-706 Judicial review. (1) Judicial review of actions taken under this chapter shall be as provided in RCW 34.05.510, et seq.

(2) Notice of the opportunity for judicial review shall be provided in all final orders.

(3) Following a petition for judicial review, the record forwarded to the reviewing court shall be those portions of the agency record designated by the parties within the time period set by the secretary.

[Statutory Authority: RCW 43.70.040. 94-04-079, § 246-10-706, filed 1/31/94, effective 3/3/94; 93-13-005 (Order 369), § 246-10-706, filed 6/3/93, effective 7/4/93.]

WAC 246-10-707 Vacating an order for reason of default or withdrawal. (1) A party may petition to vacate a default order entered against that party for failing to attend an adjudicative proceeding requested by that party by:

(a) Specifying the grounds relied upon in the petition; and

(b) Filing the petition at the adjudicative clerk office within seven days of service of the default order.

(2) The presiding officer shall consider the petition and shall:

(a) Grant the motion to vacate and reinstate the application for adjudicative proceeding, and may impose conditions on licensure pending final adjudication; or

(b) Deny the motion to vacate the default order.

[Statutory Authority: RCW 18.155.040. 97-12-089, § 246-10-707, filed 6/4/97, effective 7/5/97. Statutory Authority: RCW 43.70.040. 94-04-079, § 246-10-707, filed 1/31/94, effective 3/3/94; 93-13-005 (Order 369), § 246-10-707, filed 6/3/93, effective 7/4/93.]

Chapter 246-11 WAC
MODEL PROCEDURAL RULES FOR BOARDS

WAC

SECTION I
PRELIMINARY MATTERS

246-11-001 Purpose and application of chapter.
246-11-010 Definitions.
246-11-020 Signature authority.
246-11-030 Appearance of parties.
246-11-040 Computation of time.
246-11-050 Notarization, certification, and authentication.
246-11-060 Current address.
246-11-070 Representation.
246-11-080 Service and filing.
246-11-090 Jurisdiction.
246-11-100 Telephone proceedings.
246-11-110 Hearing location.
246-11-120 Good faith requirement.
246-11-130 Public records.
246-11-140 Expenses and witness fees.
246-11-150 Immunity.
246-11-160 Official notice and agency expertise.
246-11-170 Sanctions.
246-11-180 Intervention.
246-11-190 Form of pleadings and orders.
246-11-200 Notice to limited-English-speaking parties.
246-11-210 Interpreters.
246-11-220 Subpoenas.
246-11-230 Presiding officer and panel members.

SECTION II
INITIATING ACTIONS

246-11-250 Form and content of initiating documents.
246-11-260 Amendment of initiating documents.
246-11-270 Request for adjudicative proceeding.
246-11-280 Default.
246-11-290 Scheduling orders.

SECTION III
EMERGENCY ADJUDICATIVE PROCEEDINGS

246-11-300 Conduct of emergency adjudicative proceedings.
246-11-310 Effect of summary action.
246-11-320 Form and content of summary actions.
246-11-330 Adjudicative proceedings upon summary action.
246-11-340 Opportunity for prompt adjudicative proceeding.
246-11-350 Proceedings prior to prompt adjudicative proceeding.

SECTION IV
SETTLEMENT AND PREHEARING PROCEEDINGS

246-11-360 Settlement conference.
246-11-370 Discovery.
246-11-380 Motions.
246-11-390 Prehearing conference.
246-11-400 Protective orders.

SECTION V
BRIEF ADJUDICATIVE PROCEEDINGS

246-11-420 Application of brief adjudicative proceedings.
246-11-425 Preliminary record in brief adjudicative proceedings.
246-11-430 Conduct of brief adjudicative proceedings.
246-11-440 Effectiveness of orders on brief adjudicative proceedings.
246-11-450 Agency record in brief proceedings.

SECTION VI
HEARING

246-11-470 Notice of adjudicative proceeding.
246-11-480 Conduct of adjudicative proceeding.
246-11-490 Evidence.
246-11-500 Proposed order.
246-11-510 Issuance of final order.
246-11-520 Standard of proof.
246-11-530 Consolidated proceedings.
246-11-540 Initial order.

SECTION VII
POST HEARING PROCESS

246-11-550 Appeal from initial order.
246-11-560 Final orders.
246-11-570 Stay of final orders.
246-11-580 Reconsideration of final orders.
246-11-590 Agency record of adjudicative proceedings.
246-11-600 Judicial review.
246-11-610 Vacating an order for reason of default or withdrawal.

SECTION I
PRELIMINARY MATTERS

WAC 246-11-001 Purpose and application of chapter. (1) This chapter contains model rules for adjudicative proceedings authorized to be conducted under the authority of a board having disciplining authority under the Uniform Disciplinary Act, chapter 18.130 RCW. Each board may adopt these rules as contained in this chapter or as modified.

(2) This chapter, as modified and adopted by the board, shall apply to adjudicative proceedings authorized to be conducted under the authority of the board.

(3) This chapter applies to adjudicative proceedings begun on or after the effective date of this chapter in programs administered by the board. For purposes of this section, "begun" shall mean the receipt by the appropriate office of an application for an adjudicative proceeding. These rules shall be the exclusive rules governing adjudicative proceedings under the jurisdiction of the board.

(4) To the extent that these rules differ by inclusion, deletion, or content from the model rules adopted by the chief administrative law judge pursuant to RCW 34.05.250, this chapter shall prevail in order to provide a process consistent with the organization of the department and the board.

(5) Where a provision of this chapter conflicts with another chapter of Title 246 WAC, the provision of this chapter shall prevail.

(6) Where a provision of this chapter conflicts with a provision of the Revised Code of Washington, the statute shall prevail.

[Statutory Authority: RCW 18.130.050(1), 34.05.220 and 4.24.250. 93-08-003 (Order 347), § 246-11-001, filed 3/24/93, effective 4/24/93.]

WAC 246-11-010 Definitions. As used in these rules of practice and procedure, the following terms shall have the meaning set forth in this section unless the context clearly indicates otherwise. Other terms shall have their ordinary meaning unless defined elsewhere in this chapter.

"Adjudicative clerk office" shall mean the unit with responsibility for: Docketing; service of orders; and maintaining custody of the adjudicative proceeding record, whose address is:

Department of Health
Adjudicative Clerk Office
2413 Pacific Avenue
PO Box 47879
Olympia, WA 98504-7879

"Adjudicative proceeding" or "hearing" shall mean a proceeding required by statute or constitutional right and conducted under the rules of this chapter, which provides an opportunity to be heard by the board prior to the entry of a final order under this chapter.

"Board" shall mean a disciplining authority under RCW 18.130.040 (2)(b) and (3).

"Brief adjudicative proceeding" shall mean an adjudicative proceeding or hearing, the scope or conduct of which is limited as provided in this chapter.

"Department" shall mean the Washington state department of health and, where appropriate, the secretary of the Washington state department of health or the secretary's designee.

"Docket" or "docketing" shall mean the list or calendar of causes set to be heard at a specified time, prepared by the adjudicative clerk office for the use of the department.

"Filing" shall mean receipt by the adjudicative clerk office.

"Initiating document" shall mean a written agency document which initiates action against a license holder or applicant for license and which creates the right to an adjudicative proceeding. It may be entitled a statement of charges, notice of intent to deny, or by any other designation indicating the action or proposed action to be taken.

"License" shall have the meaning set forth in RCW 34.05.010 and includes license to practice the profession for which the board is the disciplining authority and any approval of school or curriculum required by law or rule to be obtained from the board.

"Presiding officer" shall mean the person who is assigned to conduct an adjudicative proceeding and who may either be a member of the board, an individual appointed pursuant to RCW 18.130.095(3), or an administrative law judge employed by the office of administrative hearings.

"Presiding officer for brief adjudicative proceedings" shall mean an employee of the department authorized by the board to conduct brief adjudicative proceedings.

"Program" shall mean the administrative unit within the department responsible for implementation of that chapter of Title 18 RCW establishing the board or its powers and responsibilities.

"Prompt adjudicative proceeding" or "prompt hearing" shall mean a hearing conducted at the request of the license holder or applicant for license following summary action

taken in accord with this chapter against that license holder or applicant.

"Protective order" shall mean an order issued under this chapter which limits the use of, access to, or disclosure of information or evidence.

"Respondent" shall mean a license holder or applicant for license under the jurisdiction of the board who is named in an initiating document.

"Secretary" shall mean the secretary of the department of health or his/her designee.

"Summary action" shall mean an agency action to address an immediate danger to the public health, safety, or welfare and shall include, but not be limited to, a cease and desist order, an order of summary suspension, and an order of summary restriction of a license.

[Statutory Authority: RCW 18.155.040. 97-13-015, § 246-11-010, filed 6/6/97, effective 7/7/97. Statutory Authority: RCW 18.130.050(1) and 18.130.060(3). 94-04-078, § 246-11-010, filed 1/31/94, effective 3/3/94. Statutory Authority: RCW 18.130.050(1) and 34.05.220. 93-08-003 (Order 347), § 246-11-010, filed 3/24/93, effective 4/24/93.]

WAC 246-11-020 Signature authority. (1) A person designated by the board shall sign all initiating documents issued under this chapter.

(2) All final orders shall be signed by a member of the panel of board members who heard the matter.

(3) All other orders shall be signed by the presiding officer conducting the proceeding.

(4) Authority to sign shall be indicated by designation of the title of the person signing and shall not require any other affirmation, affidavit, or allegation.

[Statutory Authority: RCW 18.130.050(1) and 18.130.060(3). 94-04-078, § 246-11-020, filed 1/31/94, effective 3/3/94. Statutory Authority: RCW 18.130.050(1). 93-08-003 (Order 347), § 246-11-020, filed 3/24/93, effective 4/24/93.]

WAC 246-11-030 Appearance of parties. If a respondent requests an adjudicative proceeding to contest the action, that party shall appear at all stages of the proceeding except as otherwise provided in this section.

(1) If the respondent is represented as provided in this chapter, the respondent shall appear personally at the hearing and at any scheduled settlement conference but need not appear at the prehearing conference or at presentation of motions.

(2) Parties may be represented by counsel at all proceedings.

(3) The respondent may appear by telephone at any portion of the proceedings conducted by telephone, in the discretion of the presiding officer following reasonable advance notice to the presiding officer and to the opposing party.

(4) The requirement of personal appearance may be waived for good cause in the discretion of the presiding officer.

(5) Failure to appear as provided in this chapter shall be grounds for taking final action by default.

[Statutory Authority: RCW 18.130.050(1) and 18.130.060(3). 94-04-078, § 246-11-030, filed 1/31/94, effective 3/3/94. Statutory Authority: RCW 18.130.050(1). 93-08-003 (Order 347), § 246-11-030, filed 3/24/93, effective 4/24/93.]

WAC 246-11-040 Computation of time. (1) When computing a period of time prescribed or allowed by an applicable statute or rule, the day of the act, event, or default from which the designated period of time begins to run shall not be included.

(2) The last day of the computed period shall be included unless the last day is a Saturday, Sunday, or legal holiday.

(3) When the last day is a Saturday, Sunday, or legal holiday, the period shall run until the end of the next day which is not a Saturday, Sunday, or legal holiday.

(4) When the period of time prescribed or allowed is seven days or less, any intermediate Saturday, Sunday, and legal holiday shall be excluded from the computation.

[Statutory Authority: RCW 18.130.050(1) and 34.05.220. 93-08-003 (Order 347), § 246-11-040, filed 3/24/93, effective 4/24/93.]

WAC 246-11-050 Notarization, certification, and authentication. (1) A person's sworn written statement, declaration, verification, certificate, oath, or affidavit may be authenticated by an unsworn written statement which is executed in substantially the following form:

> I certify (or declare) under penalty of perjury under the laws of the state of Washington that the foregoing is true and correct.
>
> _____ _____
> (Date and Place) (Signature)

(2) Documents or records may be authenticated by a certification, as provided in subsection (1) of this section, from the custodian of the records or other qualified person that the documents or records are what they purport to be.

(3) Signature of any attorney shall be accompanied by and authenticated by that attorney's Washington State Bar Association number.

(4) Documents prepared and submitted by a party who is not represented by an attorney shall be signed and dated by that party and shall include that party's current address.

(5) Signature by a party or an attorney on a document shall constitute a certificate by the party or attorney that he/she has read the document, believes there are grounds to support it, and has not submitted the document for the purpose of delay, harassment, or needless increase in the cost of a proceeding.

(6) Compliance with certification requirements of subsections (1) and (2) of this section creates a rebuttable presumption that a document is authentic.

[Statutory Authority: RCW 18.130.050(1) and 18.130.060(3). 94-04-078, § 246-11-050, filed 1/31/94, effective 3/3/94. Statutory Authority: RCW 18.130.050(1). 93-08-003 (Order 347), § 246-11-050, filed 3/24/93, effective 4/24/93.]

WAC 246-11-060 Current address. Each license holder and applicant shall provide a current mailing address and all subsequent address changes to the program. Whenever service upon any such person is required by these rules, the most recent address provided may be used unless the program has actual knowledge that the person resides at a different address.

[Statutory Authority: RCW 18.130.050(1) and 18.130.060(3). 94-04-078, § 246-11-060, filed 1/31/94, effective 3/3/94. Statutory Authority: RCW

18.130.050(1). 93-08-003 (Order 347), § 246-11-060, filed 3/24/93, effective 4/24/93.]

WAC 246-11-070 Representation. (1) License holders, applicants for license, and recipients of benefits may be represented subject to the following conditions:

(a) A license holder or applicant for license may represent himself/herself or may be represented by an attorney who has complied with the admission to practice rules of the supreme court of the state of Washington;

(b) Every attorney representing a license holder or applicant for license shall file a notice of appearance with the adjudicative clerk office upon commencing representation, and shall file a notice of withdrawal of counsel with the adjudicative clerk office upon terminating representation.

(c) No license holder or applicant may be represented in an adjudicative proceeding by an employee of the department.

(2) No current or former employee of the department may appear as an expert, character witness, or representative of any party other than the state of Washington if he/she took an active part in investigating or evaluating the case or represented the agency in the matter, unless written permission of the secretary is granted. No current or former member of the attorney general's office staff who participated personally and substantially in investigating or evaluating the matter at issue while so employed may represent a party or otherwise participate in a related proceeding without first having obtained the written consent of the attorney general's office.

[Statutory Authority: RCW 18.155.040. 97-13-015, § 246-11-070, filed 6/6/97, effective 7/7/97. Statutory Authority: RCW 18.130.050(1). 93-08-003 (Order 347), § 246-11-070, filed 3/24/93, effective 4/24/93.]

WAC 246-11-080 Service and filing. (1) A party filing a pleading, brief, or paper other than an initiating document or application for an adjudicative proceeding as required or permitted by these rules, shall serve a copy of the paper upon the opposing party or any designated representative of the opposing party prior to or simultaneous with filing.

(2) Unless otherwise provided by law, filing and service shall be made by personal service; first class, registered, or certified mail.

(3) Filing shall be complete upon actual receipt during normal business hours at the adjudicative clerk office, unless filing is directed in writing to be made to another address.

(4) Service shall be complete when personal service is made; mail is properly stamped, addressed, and deposited in the United States mail.

(5) Proof of service shall consist of filing as required by these rules, together with one of the following:

(a) An acknowledgement of service;

(b) A certificate of service including the date the papers were served, the parties upon whom served, the signature of the serving party, and a statement that service was completed by:

(i) Personal service; or

(ii) Mailing in the United States mail a copy properly addressed with postage and fees prepaid to each party and each designated representative.

[Statutory Authority: RCW 18.155.040. 97-13-015, § 246-11-080, filed 6/6/97, effective 7/7/97. Statutory Authority: RCW 18.130.050(1) and 18.130.060(3). 94-04-078, § 246-11-080, filed 1/31/94, effective 3/3/94. Statutory Authority: RCW 18.130.050(1). 93-08-003 (Order 347), § 246-11-080, filed 3/24/93, effective 4/24/93.]

WAC 246-11-090 Jurisdiction. (1) The board has jurisdiction over all licenses issued by the board and over all holders of and applicants for licenses as provided in RCW 18.130.040 (2)(b) and (3). Such jurisdiction is retained even if an applicant requests to withdraw the application, or a licensee surrenders or fails to renew a license.

(2) The department has jurisdiction over unlicensed practice of any activity for which a license is required.

[Statutory Authority: RCW 18.130.050(1) and 18.130.060(3). 94-04-078, § 246-11-090, filed 1/31/94, effective 3/3/94. Statutory Authority: RCW 18.130.050(1). 93-08-003 (Order 347), § 246-11-090, filed 3/24/93, effective 4/24/93.]

WAC 246-11-100 Telephone proceedings. (1) The presiding officer may conduct all or part of the proceedings or permit a party or witness to appear by telephone or other electronic means if each participant in the proceedings has an opportunity to participate in, hear, and, if technically and economically feasible, see the entire proceeding while it is taking place. Cost of such appearance may be assessed to the party so appearing or on whose behalf the witness appears.

(2) If all or part of the proceedings is conducted as provided in subsection (1) of this section, the parties shall file and serve copies of all documentary evidence no less than three days prior to the proceeding. The presiding officer may, for good cause, allow exceptions to this requirement.

[Statutory Authority: RCW 18.130.050(1) and 18.130.060(3). 94-04-078, § 246-11-100, filed 1/31/94, effective 3/3/94. Statutory Authority: RCW 18.130.050(1) and 4.24.250. 93-08-003 (Order 347), § 246-11-100, filed 3/24/93, effective 4/24/93.]

WAC 246-11-110 Hearing location. The presiding officer shall designate sites for the conduct of proceedings taking into account accessibility, efficiency, and economy.

[Statutory Authority: RCW 18.130.050(1) and 18.130.060(3). 94-04-078, § 246-11-110, filed 1/31/94, effective 3/3/94; 93-08-003 (Order 347), § 246-11-110, filed 3/24/93, effective 4/24/93.]

WAC 246-11-120 Good faith requirement. Good faith shall be the standard for compliance with these rules. Failure to make a good faith effort to comply with these rules shall be grounds for sanctions as provided in this chapter.

[Statutory Authority: RCW 18.130.050(1). 93-08-003 (Order 347), § 246-11-120, filed 3/24/93, effective 4/24/93.]

WAC 246-11-130 Public records. (1) All papers, exhibits, transcripts, and other materials required by or submitted in accordance with this chapter shall be considered public records.

(2) Release of information on a request for public records shall be subject to the following limitations:

(a) Release of health care information shall comply with chapter 70.02 RCW and rules promulgated thereunder;

(b) Protective orders issued pursuant to WAC 246-11-400 shall prevail; and

(c) Chapter 42.17 RCW shall govern the release of records.

[Statutory Authority: RCW 18.130.050(1) and 18.130.060(3). 94-04-078, § 246-11-130, filed 1/31/94, effective 3/3/94. Statutory Authority: RCW 18.130.050(1). 93-08-003 (Order 347), § 246-11-130, filed 3/24/93, effective 4/24/93.]

WAC 246-11-140 Expenses and witness fees. (1) Fees and expenses shall be paid at the following rates to witnesses appearing under subpoena by the party requesting the appearance:

(a) Fees shall be paid at the daily rate established for jurors in district court of Thurston County; and

(b) Expenses shall be paid at the rate established for employees of the state of Washington, or as otherwise required by law.

(2) Fees for an expert witness shall be negotiated by and paid by the party requesting services of the expert.

(3) All expenses incurred in connection with proceedings under this chapter shall be paid by the party incurring the expense.

(4) The program shall pay expenses associated with:

(a) The facility in which proceedings are conducted; and

(b) Recording of the proceedings.

(5) Expenses related to preparation and distribution of the transcript of proceedings shall be paid by the party filing a motion or request for review of an initial order or petition for reconsideration, appealing a final order, or otherwise requesting the transcript.

[Statutory Authority: RCW 18.130.050(1) and 18.130.060(3). 94-04-078, § 246-11-140, filed 1/31/94, effective 3/3/94. Statutory Authority: RCW 18.130.050(1), 18.130.060(3) and 34.05.566. 93-08-003 (Order 347), § 246-11-140, filed 3/24/93, effective 4/24/93.]

WAC 246-11-150 Immunity. The legislature has determined that persons who file complaints with or provide information to the department or board regarding health care practitioners licensed by the board or department are immune from civil liability, provided that such persons have acted in good faith. RCW 4.24.240 through 4.24.260, 18.130.170, 18.130.180, and 18.130.300 set forth the provisions under which immunity is granted.

[Statutory Authority: RCW 18.130.050(1). 93-08-003 (Order 347), § 246-11-150, filed 3/24/93, effective 4/24/93.]

WAC 246-11-160 Official notice and agency expertise. (1) Official notice may be taken as provided in RCW 34.05.452(5).

(2) The board may use its expertise and specialized knowledge to evaluate and draw inferences from the evidence presented to it.

[Statutory Authority: RCW 18.130.050(1) and 18.130.060(3). 94-04-078, § 246-11-160, filed 1/31/94, effective 3/3/94. Statutory Authority: RCW 18.130.050(1) and 34.05.452(5). 93-08-003 (Order 347), § 246-11-160, filed 3/24/93, effective 4/24/93.]

WAC 246-11-170 Sanctions. (1) Orders may include sanctions against either party.

(2) Grounds for sanctions may include:

(a) Failure to comply with these rules or orders of the presiding officer; and

(b) Willful interference with the progress of proceedings.

(3) Sanctions may include:

(a) Dismissal of the matter;

(b) Proceeding in default; and

(c) Other sanctions as appropriate.

(4) The order shall state the grounds upon which any sanctions are imposed.

[Statutory Authority: RCW 18.130.050(1). 93-08-003 (Order 347), § 246-11-170, filed 3/24/93, effective 4/24/93.]

WAC 246-11-180 Intervention. (1) The presiding officer may grant a petition for intervention pursuant to RCW 34.05.443.

(2) A request to intervene shall be handled as a prehearing motion and shall be subject to the dates contained in the scheduling order. Within the sound exercise of discretion, the presiding officer may allow intervention if:

(a) The intervenor is not a party to the matter but has a substantial interest in outcome of the matter and the interest of the intervenor is not adequately represented by a party, or other good cause exists; and

(b) Any representative of the intervenor meets the requirements of WAC 246-11-070.

(3) A person shall not be allowed to intervene if that person had notice of the board's decision and, upon timely application, would have been able to appear as a party in the matter in which intervention is sought, but failed to make such timely application.

(4) If intervention is granted, the intervenor shall be subject to these rules on the same basis as the other parties to the proceeding, unless otherwise limited in the order granting intervention.

[Statutory Authority: RCW 18.130.050(1) and 18.130.060(3). 94-04-078, § 246-11-180, filed 1/31/94, effective 3/3/94. Statutory Authority: RCW 18.130.050(1). 93-08-003 (Order 347), § 246-11-180, filed 3/24/93, effective 4/24/93.]

WAC 246-11-190 Form of pleadings and orders. (1) Pleadings, orders, and other papers filed, served, or entered under this chapter shall be:

(a) Captioned with the name of the state of Washington, the name of the board, and the title and cause number, if any, of the proceeding; and

(b) Signed by the person filing, serving, or entering the document. When that person is an attorney representing a party, the signature block shall include the attorney's Washington State Bar Association number.

(2) All orders shall comply with RCW 34.05.461 and the requirements of this chapter.

[Statutory Authority: RCW 18.130.050(1). 93-08-003 (Order 347), § 246-11-190, filed 3/24/93, effective 4/24/93.]

WAC 246-11-200 Notice to limited-English-speaking parties. When the program or the adjudicative clerk office is notified or otherwise made aware that a limited-English-speaking person is a party in an adjudicative proceeding, all notices concerning the hearing, including notices of hearing, continuance, and dismissal, shall either be in the primary language of the party or shall include a notice in the primary language of the party which describes the significance of the notice and how the party may receive assistance in understanding and, if necessary, responding to the notice.

[Statutory Authority: RCW 18.155.040. 97-13-015, § 246-11-200, filed 6/6/97, effective 7/7/97. Statutory Authority: RCW 18.130.050(1) and

34.05.220. 93-08-003 (Order 347), § 246-11-200, filed 3/24/93, effective 4/24/93.]

WAC 246-11-210 Interpreters. (1) A "hearing impaired person" means a person who, because of a hearing impairment or speech defect cannot readily understand or communicate in spoken language. A "hearing impaired person" includes a person who is deaf, deaf and blind, or hard of hearing.

(2) A "limited-English-speaking person" means a person who because of a non-English speaking cultural background cannot readily speak or understand the English language.

(3) If a hearing impaired person or a limited-English-speaking person is involved in an adjudicative proceeding and a need for an interpreter is made known to the adjudicative clerk office, the presiding officer shall appoint an interpreter who is acceptable to the parties or, if the parties are unable to agree on an interpreter, the presiding officer shall select and appoint an interpreter.

(4) Before beginning to interpret, an interpreter shall take an oath or make affirmation that:

(a) A true interpretation shall be made to the impaired person of all the proceedings in a language or in a manner the impaired person understands; and

(b) The interpreter shall repeat the statements of the impaired person to the presiding officer, in the English language, to the best of the interpreter's skill and judgment.

(5) When an interpreter is used in a proceeding:

(a) The interpreter shall translate all statements made by other participants in the proceeding;

(b) The presiding officer shall ensure sufficient extra time is provided to permit translation; and

(c) The presiding officer shall ensure that the interpreter translates the entire proceeding to the hearing impaired person or limited-English-speaking person to the extent that the person has the same opportunity to understand the statements made as would a person not requiring an interpreter.

(6) An interpreter appointed under this section shall be entitled to a reasonable fee for services, including waiting time and reimbursement for actual necessary travel expenses. The program shall pay the interpreter fee and expenses incurred for interpreters for license holders, applicants, or recipients of benefits. The party on whose behalf a witness requiring an interpreter appears shall pay for interpreter services for that witness.

(7) All proceedings shall be conducted consistent with chapters 2.42 and 2.43 RCW.

[Statutory Authority: RCW 18.155.040. 97-13-015, § 246-11-210, filed 6/6/97, effective 7/7/97. Statutory Authority: RCW 18.130.050(1) and 34.05.220. 93-08-003 (Order 347), § 246-11-210, filed 3/24/93, effective 4/24/93.]

WAC 246-11-220 Subpoenas. (1) The board, through the presiding officer, or other designated person, and attorneys for parties may issue subpoenas to residents of the state of Washington, to license holders and applicants for license, and to other persons or entities subject to jurisdiction under RCW 4.28.185.

(2) The presiding officer shall issue subpoenas pursuant to RCW 34.05.446(1) for parties not represented by counsel upon request of the party and upon a showing of relevance and reasonable scope of the testimony or evidence sought. Requests for issuance of subpoenas must be made in writing to the presiding officer stating the relevance and the scope of testimony or evidence sought.

(3) The person on whose behalf the subpoena is issued shall pay any witness fees and expenses as provided in WAC 246-11-140 or costs for interpreters for such witnesses as provided in WAC 246-11-210.

(4) Attendance of persons subpoenaed and production of evidence may be required at any designated place in the state of Washington.

(5) Every subpoena shall:

(a) Comply with WAC 246-11-190;

(b) Identify the party causing issuance of the subpoena;

(c) State the title of the proceeding; and

(d) Command the person to whom the subpoena is directed to attend and give testimony and/or produce designated items under the person's control at a specified time and place.

(6) A subpoena may be served by any suitable person eighteen years of age or older by:

(a) Giving a copy to the person to whom the subpoena is addressed;

(b) Leaving a copy at the residence of the person to whom the subpoena is addressed with a person of suitable age and discretion;

(c) Sending a copy by mail to the current address on file with the program if the person is licensed by the board or has filed an application for a license with the board; or

(d) Sending a copy by certified mail with proof of receipt if the person is neither licensed by nor has applied for a license with the board.

(7) Proof of service may be made by:

(a) Affidavit of personal service;

(b) Certification by the person mailing the subpoena to a license holder or applicant; or

(c) Return or acknowledgment showing receipt by the person subpoenaed or his/her representative. Any person accepting certified or registered mail at the last known address of the person subpoenaed shall be considered an authorized representative.

(8) The presiding officer, upon motion made promptly and before the time specified for compliance in the subpoena, may:

(a) Quash or modify the subpoena if the subpoena is unreasonable or requires evidence not relevant to any matter at issue; or

(b) Condition denial of the motion upon just and reasonable conditions, including advancement of the reasonable cost by the person on whose behalf the subpoena is issued of producing the books, documents, or tangible things; or

(c) Issue a protective order under RCW 34.05.446.

(9) The board may seek enforcement of a subpoena under RCW 34.05.588(1) or proceed in default pursuant to WAC 246-11-280.

[Statutory Authority: RCW 18.130.050(1) and 18.130.060(3). 94-04-078, § 246-11-220, filed 1/31/94, effective 3/3/94. Statutory Authority: RCW 18.130.050(1), 4.24.240, 4.24.250 and 4.24.260. 93-08-003 (Order 347), § 246-11-220, filed 3/24/93, effective 4/24/93.]

WAC 246-11-230 Presiding officer and panel members. (1) The board may appoint one or more persons as presiding officer for brief adjudicative proceedings as provided in WAC 246-11-430(1).

(2) The board shall authorize one of the following to serve as presiding officer for adjudicative proceedings:

(a) A board member; or

(b) An individual appointed pursuant to RCW 18.130.095(3); or

(c) An administrative law judge employed by the office of administrative hearings.

(3) The board may designate certain of its members to hear a matter as a hearing panel as provided by law.

(4) Any party may move to disqualify the presiding officer, or a member of the board hearing the matter, as provided in RCW 34.05.425(3).

[Statutory Authority: RCW 18.130.050(1) and 18.130.060(3). 94-04-078, § 246-11-230, filed 1/31/94, effective 3/3/94. Statutory Authority: RCW 18.130.050(1). 93-08-003 (Order 347), § 246-11-230, filed 3/24/93, effective 4/24/93.]

SECTION II
INITIATING ACTIONS

WAC 246-11-250 Form and content of initiating documents. (1) Initiating documents shall include a clear and concise statement of the:

(a) Identity and authority of the person issuing the document;

(b) Factual basis for the action or proposed action set forth in the document;

(c) Statutes and rules alleged to be at issue;

(d) Identity of the party against whom the action is taken or proposed to be taken;

(e) Action or proposed action or penalties, including the statutory or rule authority for those actions or penalties;

(f) Signature of the person issuing the document and the date signed; and

(g) Method by which an adjudicative proceeding may be requested.

(2) Initiating documents shall be accompanied by the following documents:

(a) Notice that the respondent may defend against the action or proposed action; and

(b) Form for requesting adjudicative proceeding.

(3) Initiating documents shall be served as described in WAC 246-11-080.

[Statutory Authority: RCW 18.130.050(1) and 18.130.060(3). 94-04-078, § 246-11-250, filed 1/31/94, effective 3/3/94. Statutory Authority: RCW 18.130.050(1) and 34.05.220. 93-08-003 (Order 347), § 246-11-250, filed 3/24/93, effective 4/24/93.]

WAC 246-11-260 Amendment of initiating documents. (1) Prior to the hearing date, initiating documents may be amended subject to the following conditions:

(a) Amended initiating documents shall meet the requirements of WAC 246-11-250(1);

(b) Amended initiating documents shall be accompanied by the documents described in WAC 246-11-250(2);

(c) Whenever amended initiating documents are issued, a new interval for response will begin, as described in WAC 246-11-270, unless the respondent requests the time periods set by the original initiating document; and

(d) Issuance of amended initiating documents ends all obligations of the parties under the prior initiating documents.

(2) On the hearing date, the initiating documents may be amended subject to the following conditions:

(a) The documents may be amended upon motion of the state;

(b) The documents may not be amended without the approval of the presiding officer; and

(c) Upon motion of a party or upon his/her own initiative, the presiding officer may grant a continuance on all or part of the matter if necessary to afford the respondent an opportunity to prepare a defense to the amended documents.

[Statutory Authority: RCW 18.130.050(1) and 18.130.060(3). 94-04-078, § 246-11-260, filed 1/31/94, effective 3/3/94. Statutory Authority: RCW 18.130.050(1) and 34.05.220. 93-08-003 (Order 347), § 246-11-260, filed 3/24/93, effective 4/24/93.]

WAC 246-11-270 Request for adjudicative proceeding. A respondent may respond to an initiating document by filing an application for an adjudicative proceeding or by waiving the opportunity for adjudicative proceeding.

(1) If the respondent wishes to file an application for an adjudicative proceeding:

(a) An application for adjudicative proceeding must be filed in accordance with the following time periods:

(i) For matters under chapter 18.130 RCW, the Uniform Disciplinary Act, within twenty days of service of the initiating documents unless and extension has been granted as provided in subsection (3) of this section; and

(ii) For all other matters, within twenty days of service of the initiating documents, unless otherwise provided by statute.

(b) The application for adjudicative proceeding shall be made on the Request for Adjudicative Proceeding form accompanying the initiating documents or by a written document including substantially the same information.

(c) By filing a request for adjudicative proceeding, the responding party agrees to appear personally at the adjudicative proceeding or, if otherwise approved by the presiding officer, by telephone, unless appearance is waived as authorized in WAC 246-11-130(4).

(d) The application for adjudicative proceeding shall contain a response to the initiating documents, indicating whether each charge is admitted, denied or not contested, and responses shall be subject to the following conditions:

(i) Once admitted or not contested, an allegation may not be denied; and

(ii) An allegation denied or not contested may later be admitted.

(e) When an allegation is admitted or not contested, it shall be conclusively deemed to be true for all further proceedings. No proof of the allegation need be submitted.

(f) The application for adjudicative proceeding shall specify the representative, if any, designated pursuant to WAC 246-11-070 and any request for interpreter. The responding party shall amend the name of the representative and need for interpreter immediately if circumstances change prior to the hearing.

(g) The application for adjudicative proceeding shall be filed at the adjudicative clerk office.

(2) A respondent may waive an adjudicative proceeding and submit a written statement and other documents in defense or in mitigation of the charges. Such waiver and documents shall be filed:

(a) In accordance with the timelines in subsection (1)(a) of this section; and

(b) At the address indicated in subsection (1)(g) of this section.

(3) For matters under RCW 18.130.180, if the twenty-day limit for filing an application for adjudicative proceeding results in a hardship to the respondent, the respondent may request an extension of not more than sixty days upon a showing of good cause.

(a) The request for extension shall be filed within the twenty-day limit and shall include:

(i) The reason for the request and the number of days for which the extension is requested; and

(ii) Documentation of the circumstances creating the hardship.

(b) The request shall be granted for a period not to exceed sixty days upon showing of:

(i) Illness of the respondent; or

(ii) Absence of the respondent from the county of residence or employment; or

(iii) Emergency in the respondent's family; or

(iv) Other good cause as determined by the presiding officer.

(c) If a request for extension is denied, the respondent shall have ten days from service of the order denying the extension or twenty days from service of the initiating documents, whichever is longer, to file an application for adjudicative proceeding.

[Statutory Authority: RCW 18.155.040. 97-13-015, § 246-11-270, filed 6/6/97, effective 7/7/97. Statutory Authority: RCW 18.130.050(1) and 18.130.060(3). 94-04-078, § 246-11-270, filed 1/31/94, effective 3/3/94. Statutory Authority: RCW 18.130.050(1) and 34.05.220. 93-08-003 (Order 347), § 246-11-270, filed 3/24/93, effective 4/24/93.]

WAC 246-11-280 Default. (1) If a party fails to respond to initiating documents according to WAC 246-11-270, that party will be deemed to have waived the right to a hearing, and the board shall enter a final order without further contact with that party.

(2) If a party requests an adjudicative proceeding but fails to appear, without leave to do so, at a scheduled prehearing conference, the presiding officer may issue an order of default. The order shall include notice of opportunity to request that the default order be vacated pursuant to RCW 34.05.440(3). Unless vacated, a default order under this subsection shall be grounds for the board to proceed to decide the matter in the absence of the respondent and without additional notice to the respondent and to issue a final order.

(3) If a party requests an adjudicative proceeding but fails to appear at the hearing, the presiding officer may issue an order of default in the same manner as subsection (2) of this section, or may proceed to hear the matter in the absence of the party and issue a final order.

(4) Final orders entered under this section shall contain:

(a) Findings of fact and conclusions of law based upon prima facie proof of the allegations contained in the initiating documents;

(b) Proof of service of or a good faith attempt to serve initiating documents and appropriate notices;

(c) A finding that there is no reason to believe that the party in default is in active military service;

(d) The penalties or conditions imposed by the order; and

(e) Notice of the opportunity to request reconsideration pursuant to RCW 34.05.470.

(5) Final and default orders entered under this section shall be served upon the parties in accordance with WAC 246-11-080.

[Statutory Authority: RCW 18.130.050(1) and 18.130.060(3). 94-04-078, § 246-11-280, filed 1/31/94, effective 3/3/94. Statutory Authority: RCW 18.130.050(1), 34.05.220, 34.05.440 and 34.05.470. 93-08-003 (Order 347), § 246-11-280, filed 3/24/93, effective 4/24/93.]

WAC 246-11-290 Scheduling orders. (1) Within thirty days after receipt of the application for adjudicative proceeding, the board or designee thereof, shall:

(a) Approve the application for full adjudicative procedure and issue and serve on the parties a scheduling order or other scheduling mechanism establishing timelines for discovery, settlement, and scheduled hearings; or

(b) Approve the application for a brief adjudicative procedure and issue and serve a notice of the date by which any additional written materials are to be submitted for consideration; or

(c) Deny the application according to RCW 34.05.416.

(2) If a scheduling order is issued:

(a) The scheduling order shall specify:

(i) The date, time, and place of a settlement conference, a prehearing conference, and the hearing;

(ii) The deadlines for completion of discovery and submission of prehearing motions; and

(iii) The name, address, and telephone number of the assistant attorney general or other department representative who will represent the state in the matter.

(b) The scheduling order may be modified by order of the presiding officer upon his/her own initiative or upon motion of a party. Any request for change of the scheduling mechanism or order shall be made by motion as provided in WAC 246-11-380.

(c) The presiding officer may waive establishing dates for the settlement conference, completion of discovery, submission of prehearing motions, and the prehearing conference, if, in the discretion of the presiding officer, those proceedings are not necessary or appropriate in a particular matter or type of case. However, either party may request by motion to the presiding officer that any or all of the dates be set.

(d) Dates contained in the scheduling order may be changed by the adjudicative clerk office upon written request of either party made within fifteen days of issuance of the first scheduling order. All other changes must be made by motion pursuant to WAC 246-11-380.

[Statutory Authority: RCW 18.155.040. 97-13-015, § 246-11-290, filed 6/6/97, effective 7/7/97. Statutory Authority: RCW 18.130.050(1) and 18.130.060(3). 94-04-078, § 246-11-290, filed 1/31/94, effective 3/3/94. Statutory Authority: RCW 18.130.050(1) and 34.05.419. 93-08-003 (Order 347), § 246-11-290, filed 3/24/93, effective 4/24/93.]

SECTION III
EMERGENCY ADJUDICATIVE PROCEEDINGS

WAC 246-11-300 Conduct of emergency adjudicative proceedings. (1) Summary action may be taken only after a review by the board of such evidence, including affidavits, if appropriate, to establish:

(a) The existence of an immediate danger to the public health, safety, or welfare;

(b) The board's ability to address the danger through a summary action, and

(c) The summary action necessary to address the danger.

(2) No notice to any person potentially affected by a summary action shall be required prior to issuance of a summary action.

[Statutory Authority: RCW 18.130.050(1) and 18.130.060(3). 94-04-078, § 246-11-300, filed 1/31/94, effective 3/3/94. Statutory Authority: RCW 18.130.050(1), 34.05.422 and 34.05.479. 93-08-003 (Order 347), § 246-11-300, filed 3/24/93, effective 4/24/93.]

WAC 246-11-310 Effect of summary action. (1) Summary action takes effect upon entry of the order.

(2) No person shall be required to comply with a summary action until service has been made or the person has knowledge of the order, whichever occurs first.

(3) A summary action shall be served as promptly as practicable, in accordance with WAC 246-11-080.

(4) A summary action shall not be subject to the post hearing process provided in WAC 246-11-550 through 246-11-610, but a summary action may be appealed to superior court as provided by law.

[Statutory Authority: RCW 18.130.050(1), 34.05.422 and 34.05.479. 93-08-003 (Order 347), § 246-11-310, filed 3/24/93, effective 4/24/93.]

WAC 246-11-320 Form and content of summary actions. (1) A summary action shall be entered in the form of an order containing findings of fact, conclusions of law, and the summary action imposed, as well as a statement of policy reasons for the decision.

(2) A summary action imposed by emergency adjudicative proceeding shall be limited to those actions necessary to alleviate an immediate danger to the public health, safety, or welfare.

(3) Initiating documents, and all other documents required by WAC 246-11-250 shall accompany a summary action order when served.

[Statutory Authority: RCW 18.130.050(1), 34.05.473 and 34.05.479. 93-08-003 (Order 347), § 246-11-320, filed 3/24/93, effective 4/24/93.]

WAC 246-11-330 Adjudicative proceedings upon summary action. Following summary action taken by the board, the respondent may:

(1) Request a prompt adjudicative proceeding conducted in accordance with this chapter; or

(2) Waive the prompt adjudicative proceeding and request a regularly scheduled adjudicative proceeding conducted in accordance with this chapter;

(3) Waive the right to an adjudicative proceeding and submit a written statement to be considered prior to the entry of the final order; or

(4) Waive the opportunity to be heard.

[Statutory Authority: RCW 18.130.050(1) and 18.130.060(3). 94-04-078, § 246-11-330, filed 1/31/94, effective 3/3/94. Statutory Authority: RCW 18.130.050(1) and 34.05.479. 93-08-003 (Order 347), § 246-11-330, filed 3/24/93, effective 4/24/93.]

WAC 246-11-340 Opportunity for prompt adjudicative proceeding. (1) Any respondent affected by a summary action shall be provided the opportunity to request a prompt adjudicative proceeding. Notice of the opportunity shall be provided in the notice of opportunity to defend against the allegations that are the basis for the summary action. The form for requesting an adjudicative proceeding shall include the option of requesting a prompt adjudicative proceeding.

(2) Any respondent affected by a summary action may request an prompt adjudicative proceeding, may elect a regularly scheduled adjudicative proceeding instead of a prompt adjudicative proceeding, or may waive the opportunity for adjudicative proceeding in accord with WAC 246-11-270.

(3) Any request for a prompt adjudicative proceeding must be filed within ten days of the service of the summary action.

(4) If requested by the respondent, a prompt adjudicative proceeding shall be conducted within twenty days of service of a summary action.

(5) Regardless whether a prompt adjudicative proceeding is requested, the matter shall be resolved as quickly as feasible in accordance with all other applicable rules.

[Statutory Authority: RCW 18.130.050(1) and 18.130.060(3). 94-04-078, § 246-11-340, filed 1/31/94, effective 3/3/94. Statutory Authority: RCW 18.130.050(1) and 34.05.479. 93-08-003 (Order 347), § 246-11-340, filed 3/24/93, effective 4/24/93.]

WAC 246-11-350 Proceedings prior to prompt adjudicative proceeding. A settlement conference may be requested, a settlement may be offered, and a prehearing conference may be conducted prior to a prompt adjudicative proceeding. Prehearing proceedings shall not delay a prompt adjudicative proceeding except by mutual agreement of the parties.

[Statutory Authority: RCW 18.130.050(1) and 34.05.479. 93-08-003 (Order 347), § 246-11-350, filed 3/24/93, effective 4/24/93.]

SECTION IV
SETTLEMENT AND PREHEARING PROCEEDINGS

WAC 246-11-360 Settlement conference. (1) Following a request for an adjudicative proceeding, a settlement conference shall be conducted if provided in the scheduling order. If another scheduling mechanism is issued, a settlement conference may be scheduled and held at the discretion of the board or other settlement processes may be utilized at the discretion of the board.

(2) The purpose of the settlement conference or other settlement process shall be to attempt to reach agreement on the issues and on a proposed order to be entered. Any agreement of the parties is subject to final approval by the board.

(3) The respondent shall attend the settlement conference as scheduled and may also be represented as provided in WAC 246-11-070. Representatives of the board and/or department will also attend. Other persons may attend by agreement of the parties.

(4) Either party may bring documents or other materials to the settlement conference for the purpose of settlement negotiations. No testimony will be taken. No documents or information submitted at the settlement conference will be admitted at the adjudicative proceeding unless stipulated by the parties or otherwise admitted into evidence by the presiding officer.

(5) If a settlement offer has been made in writing to the respondent and it is signed and returned by the respondent to the board prior to the settlement conference, all subsequent dates set in the scheduling order or other scheduling mechanism are continued pending final review of the settlement by the board.

[Statutory Authority: RCW 18.130.050(1) and 18.130.060(3). 94-04-078, § 246-11-360, filed 1/31/94, effective 3/3/94. Statutory Authority: RCW 18.130.050(1). 93-08-003 (Order 347), § 246-11-360, filed 3/24/93, effective 4/24/93.]

WAC 246-11-370 Discovery. The parties are encouraged to exchange information and documents related to the case prior to the adjudicative proceeding. Formal discovery is obtained as follows:

(1) Methods, scope and limits:

(a) Parties may obtain discovery by production of records or things; deposition upon oral examination; requests for admission; or, if ordered by the presiding officer, written interrogatories.

(b) Unless otherwise limited by order of the presiding officer in accord with these rules, the scope of discovery shall be as follows:

(i) Parties may obtain discovery regarding any matter not privileged, which is relevant to the subject matter in the pending action. It is not grounds for objection that the information sought will be inadmissible at the adjudicative proceeding if the information sought appears reasonably calculated to lead to the discovery of admissible evidence.

(ii) The frequency or extent of use of the discovery methods set forth in these rules shall be limited by the presiding officer if the presiding officer determines that:

(A) The discovery sought is unreasonably cumulative or duplicative, or is obtainable from another source that is more convenient, less burdensome, or less expensive; or

(B) The party seeking discovery has had an ample opportunity by discovery to obtain the information sought; or

(C) The discovery is unduly burdensome or expensive, taking into account the needs of the case, limitations of the parties' resources, and the importance of the issues at stake.

(iii) The presiding officer may limit discovery upon his or her own initiative after reasonable notice or pursuant to a motion submitted by a party.

(2) Production of records, documents, or things:

(a) Upon written request of a party the opposing party shall identify experts and other witnesses to be called at the hearing and shall provide other information necessary to enable the party to conduct depositions of the witnesses.

(b) Any party may serve on any other party a request, which must be signed by the party or designated representative:

(i) To produce and permit the party making the request or designee to inspect and copy any designated documents, or to inspect and copy, test, or sample any tangible things which constitute or contain matters within the scope of discovery and which are in the possession, custody or control of the party upon whom the request is served; or

(ii) To permit entry onto designated land or other property which is in the possession or control of the party upon whom the request is served for the purpose of inspection, measuring, surveying, photographing, testing or sampling the property or designated object or operation thereon which is within the scope of discovery.

(c) Any party who produces documents for inspection shall produce them as they are kept in the usual course of business or may, if the parties agree, organize and label them to correspond with the categories in the request.

(d) The party upon whom a request is made may, by motion to the presiding officer, move for an order denying the request to produce or modify the conditions of the request. Denial of the request of change in the conditions of the request shall be within the discretion of the presiding officer and shall be made by written order.

(3) Depositions may be taken subject to the following conditions:

(a) Within the United States or a territory or insular possession subject to the dominion of the United States, depositions shall be taken before an officer authorized to administer oaths by the state of Washington or of the place where the examination is held. A presiding officer may, in his or her discretion or following motion of a party, preside at the deposition. Within a foreign country, depositions shall be taken before a secretary of an embassy or legation, consul general, vice-consul or consular agent of the United States, or a person designated by the presiding officer or agreed upon by the parties by stipulation in writing filed with the presiding officer, if any, and otherwise with the disciplining authority. Except by stipulation, no deposition shall be taken before any person who is a party or a privy of a party, or a privy of a representative of a party, or who is financially interested in the proceeding.

(b) A party desiring to take the deposition of a person upon oral examination shall give reasonable notice of not less than five days in writing to the person to be deposed and to the opposing party. The notice shall state the time and place for taking the deposition, the name and address of each person to be examined, if known, and if the name is not known, a description sufficient to identify the person to be examined or the particular class or group to which the person to be examined belongs. On motion of a party upon whom the notice is served, the presiding officer may for cause shown, lengthen or shorten the time.

(c) After notice is served for taking a deposition, or upon motion of the presiding officer, or upon motion reasonably made by any party or by the person to be examined, and upon notice and for good cause, the presiding officer may issue an order that the deposition shall not be taken or that it be taken subject to specified restrictions, conditions, or limitations.

(d) Depositions shall be recorded.

(i) The officer before whom the deposition is taken shall put the witness on oath or affirmation and shall personally or by someone acting under the officer's direction and in the officer's presence, record the testimony.

(ii) The officer or person acting under the officer's direction shall transcribe the testimony at the request of any party,

provided that any expenses shall be paid by the requesting party.

(iii) The transcribed testimony shall be submitted to the person deposed for review and signature, unless review and signature are waived by that person. The officer shall append to the transcript any changes in form or substance that may be submitted by the parties.

(iv) Copies of the transcribed and, unless review and signature has been waived, signed testimony shall be served upon the person deposed and upon the parties.

(e) If the parties so stipulate in writing or on the record, depositions may be taken before any person, at any time or place, upon any notice, and in any manner and when so taken, may be used as any other deposition.

(4) Following motion of a party and opportunity for response by the opposing party, the presiding officer may order a party to respond to written interrogatories and may order that the interrogatories be subject to specified restriction, condition, or limitation.

[Statutory Authority: RCW 18.130.050(1) and 18.130.060(3). 94-04-078, § 246-11-370, filed 1/31/94, effective 3/3/94. Statutory Authority: RCW 18.130.050(1). 93-08-003 (Order 347), § 246-11-370, filed 3/24/93, effective 4/24/93.]

WAC 246-11-380 Motions. (1) The presiding officer shall rule on motions. The presiding officer may rule on motions without oral argument or may request or permit the parties to argue the motion in person or by telephone. Oral argument may be limited in time at the discretion of the presiding officer.

(2) All prehearing motions, including discovery and evidentiary motions, shall be made in writing and filed prior to the dates set in the scheduling order. Filing shall be at the adjudicative clerk office, unless filing is directed in writing to be made at another address.

(3) Motions for continuance must be made in writing and filed prior to the dates set in the scheduling order. If the adjudicative proceeding is scheduled to take place fewer than twenty days from service of the scheduling order, motions for continuance must be made within ten days of service of the scheduling order, but in no event fewer than five days prior to the hearing. Continuances may be granted by the presiding officer for good cause.

(4) The presiding officer may grant a continuance when a motion for continuance is not submitted within the time limits contained in subsection (3) of this section for good cause.

(5) The following is the recommended format for motions:

(a) A succinct statement of the facts contended to be material;

(b) A concise statement of the issue, issues or law upon which the presiding officer is requested to rule;

(c) The specific relief requested by the moving party;

(d) If the motion requires the consideration of facts or evidence not appearing on the record, the moving party shall also serve and file copies of all affidavits and photographic or documentary evidence presented in support of the motion;

(e) The legal authority upon which the motion is based; and

(f) A proposed order may accompany the motion, and should contain findings of fact and conclusions of law.

(6) The moving party shall file the motion, and the accompanying affidavits and photographic or documentary evidence when necessary, with the board's office and with the presiding officer, and shall serve the motion, and the accompanying affidavits and photographic or documentary evidence when necessary, on all other parties.

(7) The opposing party shall file with the adjudicative clerk office, and serve upon the moving party, a responsive memorandum, and accompanying affidavits and photographic or documentary evidence when necessary, no later than eleven days following service of the motion, unless otherwise ordered by the presiding officer.

(8) The moving party may file with the adjudicative clerk office, and serve upon the opposing party, a reply memorandum no later than five days following service of the responsive memorandum, unless otherwise ordered by the presiding officer.

(9) Unless otherwise ordered by the presiding officer, all motions shall be decided without oral argument. A party requesting oral argument on a motion shall so indicate by typing "ORAL ARGUMENT REQUESTED" in the caption of the motion or the responsive memorandum. If a request for oral argument is granted, the presiding officer shall notify the parties of the date and time of the argument and whether the argument will be in person or by telephone conference.

(10) Motions to shorten time or emergency motions shall be exceptions to the rule, and a party may only make such motions in exigent or exceptional circumstances. When making such a motion, the moving party shall:

(a) Suggest a date and time when the moving party seeks to have the presiding officer hear the motion to shorten time, which should be at least forty-eight hours after filing;

(b) Suggest a date and time when the moving party seeks to have the presiding officer consider the merits of the underlying motion;

(c) Describe the exigent or exceptional circumstances justifying shortening of time in an affidavit or a memorandum accompanying the motion;

(d) Certify that the motion to shorten time and the underlying motion have been served on all other parties prior to the filing of the motion with the presiding officer. Any opposition to the motion to shorten time must be served and filed within twenty-four hours of the service of the motion. If the presiding officer grants the motion to shorten time, the presiding officer shall notify the parties of the date by which the responsive memorandum to the underlying motion shall be served and filed.

(11) All motions will be decided as soon as practical, but not more than thirty days following the filing of the motion. If the presiding officer will not decide the motion within this time, the presiding officer shall notify the parties in writing of the date by which the motion will be decided.

(12) If a party serves a motion or responsive memorandum by mail, pursuant to WAC 246-11-080, then three days shall be added to the time within which the opposing party must file and serve the responsive or reply memorandum. Service by electronic telefacsimile transmission (fax) upon each party is permitted upon agreement of the parties, with

proof of confirmation of service to be filed with the presiding officer.

(13) All computations of time shall be calculated pursuant to WAC 246-11-040.

(14) Departmental motions for summary actions are exempted from all requirements of this section.

[Statutory Authority: RCW 18.155.040. 97-13-015, § 246-11-380, filed 6/6/97, effective 7/7/97. Statutory Authority: RCW 18.130.050 and 43.70.040. 96-21-027, § 246-11-380, filed 10/7/96, effective 11/7/96. Statutory Authority: RCW 18.130.050(1) and 18.130.060(3). 94-04-078, § 246-11-380, filed 1/31/94, effective 3/3/94. Statutory Authority: RCW 18.130.-050(1). 93-08-003 (Order 347), § 246-11-380, filed 3/24/93, effective 4/24/93.]

WAC 246-11-390 Prehearing conference. (1) If a scheduling order is issued, the parties shall be notified of the time and place of the first prehearing conference in the scheduling order. If another scheduling mechanism is issued, a prehearing conference will be held upon motion of either party, unless board policy provides otherwise.

(2) The presiding officer shall determine whether the prehearing conferences will be conducted in person or by telephone conference call.

(3) The presiding officer shall conduct the prehearing conference and shall issue rulings related to prehearing motions and evidentiary issues. The rulings shall govern the conduct of subsequent proceedings.

(4) The prehearing conference may be recorded as ordered by the presiding officer. All offers of proof and objections concerning matters raised at the prehearing conference must be made on the record at the prehearing conference.

(5) Following the final prehearing conference, the presiding officer shall issue a written prehearing order which will:

(a) Identify the issues to be considered at the hearing and indicate which party has the burden of proof on these issues;

(b) Specify the facts which are admitted or not contested by the parties;

(c) Identify those documents and exhibits that will be admitted at hearing and those which may be distributed prior to hearing;

(d) Identify expert and lay witnesses that may be called at hearing and the issues to which those witnesses may testify;

(e) Rule on motions;

(f) Accept amendments to the pleadings;

(g) Address such other issues or matters as may be reasonably anticipated to arise and which may aid in the disposition of the proceedings; and

(h) Rule on objections made in any preserved testimony.

(6) Following the prehearing conference, the presiding officer may issue an order directing that the matter be heard as a brief adjudicative proceeding, pursuant to WAC 246-11-420 through 246-11-450.

(7) Documentary evidence not offered in the prehearing conference shall not be received into evidence at the adjudicative proceeding in the absence of a clear showing that the offering party had good cause for failing to produce the evidence at the prehearing conference.

(8) Witnesses not identified during the prehearing conference shall not be allowed to testify at the adjudicative proceeding in the absence of a clear showing that the party offering the testimony of such witness had good cause for failing to identify the witness at the prehearing conference.

(9) If the authenticity of documents submitted at the prehearing conference is not challenged at the prehearing conference, the documents shall be deemed authentic. However, a party shall be permitted to challenge such authenticity at a later time upon a clear showing of good cause for failure to object at the prehearing conference.

(10) Nothing in these rules shall prohibit the presiding officer from conducting a conference at any time, including during the hearing. The presiding officer shall state on the record the results of such conference.

(11) A party bound by a stipulation or admission of record may withdraw it in whole or in part only upon a determination by the presiding officer or hearing officer that:

(a) The stipulation or admission was made inadvertently or as a bona fide mistake of fact or law; and

(b) The withdrawal will not unjustly prejudice the rights of the other parties.

(12) In an appeal to superior court involving issues addressed in the prehearing order, the record of the prehearing conference, written motions and responses the prehearing order and any orders issued by the presiding officer pursuant to WAC 246-11-380, shall be the record.

[Statutory Authority: RCW 18.130.050(1) and 18.130.060(3). 94-04-078, § 246-11-390, filed 1/31/94, effective 3/3/94. Statutory Authority: RCW 18.130.050(1). 93-08-003 (Order 347), § 246-11-390, filed 3/24/93, effective 4/24/93.]

WAC 246-11-400 Protective orders. The presiding officer may issue a protective order at his or her discretion:

(1) To protect a party or person from annoyance, embarrassment, oppression, or undue burden or expense;

(2) To preserve confidentiality related to health care records or provider-client information;

(3) To protect examination processes;

(4) To protect the identity of a person supplying information to the department or board where the person indicates a desire for nondisclosure unless that person testifies or has been called to testify at an adjudicative proceeding; or

(5) To comply with applicable state or federal law.

[Statutory Authority: RCW 18.130.050(1) and 18.130.060(3). 94-04-078, § 246-11-400, filed 1/31/94, effective 3/3/94. Statutory Authority: RCW 18.130.050(1) and 34.05.446. 93-08-003 (Order 347), § 246-11-400, filed 3/24/93, effective 4/24/93.]

SECTION V
BRIEF ADJUDICATIVE PROCEEDINGS

WAC 246-11-420 Application of brief adjudicative proceedings. (1) If an adjudicative proceeding is requested, a brief adjudicative proceeding will be conducted where the matter involves one or more of the following:

(a) A determination whether an applicant for a license meets the minimum criteria for an unrestricted license and the board proposes to deny such a license or to issue a restricted license;

(b) A determination whether a person is in compliance with the terms and conditions of a final order previously issued by the board;

(c) Any approval of a school or curriculum when such approval by the board is required by statute or rule; and

(d) A determination whether a license holder requesting renewal has submitted all required information and meets minimum criteria for renewal.

(2) If an adjudicative proceeding is requested in a matter not listed in subsection (1) of this section, a brief adjudicative proceeding may be conducted in the discretion of the presiding officer when it appears that:

(a) Only legal issues exist; or

(b) Both parties have agreed to a brief proceeding; and

(c) The protection of the public interest does not require that the board provide notice and an opportunity to participate to persons other than the parties.

[Statutory Authority: RCW 18.130.050(1) and 18.130.060(3). 94-04-078, § 246-11-420, filed 1/31/94, effective 3/3/94. Statutory Authority: RCW 18.130.050(1) and 34.05.482. 93-08-003 (Order 347), § 246-11-420, filed 3/24/93, effective 4/24/93.]

WAC 246-11-425 Preliminary record in brief adjudicative proceedings. (1) The preliminary record with respect to an application for a license or for approval of a school or curriculum shall consist of:

(a) The application for the license or approval and all associated documents;

(b) All documents relied upon by the program in proposing to deny the application; and

(c) All correspondence between the applicant for license or approval and the program regarding the application.

(2) The preliminary record with respect to determination of compliance with a previously issued final order shall consist of:

(a) The previously issued final order;

(b) All reports or other documents submitted by the license holder, or at the direction of the license holder, in full or partial fulfillment of the terms of the final order; and

(c) All correspondence between the license holder and the program regarding compliance with the final order.

[Statutory Authority: RCW 18.130.050(1) and 18.130.060(3). 94-04-078, § 246-11-425, filed 1/31/94, effective 3/3/94.]

WAC 246-11-430 Conduct of brief adjudicative proceedings. (1) Brief adjudicative proceedings shall be conducted by a presiding officer for brief adjudicative proceedings designated by the board. The presiding officer for brief adjudicative proceedings shall have agency expertise in the subject matter but shall not have personally participated in the decision to issue the initiating document.

(2) The parties or their representatives may present written documentation. The presiding officer for brief adjudicative proceedings shall designate the date by which written documents must be submitted by the parties.

(3) The presiding officer for brief adjudicative proceedings may, in his or her discretion, entertain oral argument from the parties or their representatives.

(4) No witnesses may appear to testify.

(5) In addition to the record, the presiding officer for brief adjudicative proceedings may employ agency expertise as a basis for decision.

(6) The presiding officer for brief adjudicative proceedings shall not issue an oral order. Within ten days of the final date for submission of materials or oral argument, if any, the presiding officer for brief adjudicative proceedings shall enter an initial order in accordance with WAC 246-11-540.

[Statutory Authority: RCW 18.130.050 and 43.70.040. 96-21-027, § 246-11-430, filed 10/7/96, effective 11/7/96. Statutory Authority: RCW 18.130.050(1) and 18.130.060(3). 94-04-078, § 246-11-430, filed 1/31/94, effective 3/3/94. Statutory Authority: RCW 18.130.050(1). 93-08-003 (Order 347), § 246-11-430, filed 3/24/93, effective 4/24/93.]

WAC 246-11-440 Effectiveness of orders on brief adjudicative proceedings. (1) Initial orders on brief adjudicative proceedings shall become final twenty-one days after service of the initial order unless:

(a) Administrative review has been requested pursuant to WAC 246-11-550; or

(b) On its own initiative, the board determines to review the matter and, within twenty-one days of service of the initial order, provides notice to the parties of the date by which a determination shall be made.

(2) If review is taken under subsection (1) of this section, each party shall be provided an opportunity to state its view of the matter, and a written order containing findings of fact, conclusions of law, and order shall be entered and served upon the parties within twenty days of service of the initial order or the request for review, whichever is later.

(3) A request for review is deemed to be denied if the board does not act on the request within twenty days after the request is submitted.

(4) If administrative review is taken under subsection (1) of this section, the presiding officer may convert the matter to a full adjudicative proceeding.

[Statutory Authority: RCW 18.130.050(1) and 18.130.060(3). 94-04-078, § 246-11-440, filed 1/31/94, effective 3/3/94. Statutory Authority: RCW 18.130.050(1), 34.05.455, 34.05.485, 34.05.488 and 34.05.491. 93-08-003 (Order 347), § 246-11-440, filed 3/24/93, effective 4/24/93.]

WAC 246-11-450 Agency record in brief proceedings. The agency record of brief adjudicative proceedings shall consist of:

(1) The preliminary record as set forth in WAC 246-11-425;

(2) All initiating documents including the notice of opportunity to defend;

(3) The request for adjudicative proceeding;

(4) All documents submitted in the proceeding;

(5) Any transcript or recording of any testimony or arguments presented; and

(6) All orders issued in the case.

[Statutory Authority: RCW 18.130.050(1) and 18.130.060(3). 94-04-078, § 246-11-450, filed 1/31/94, effective 3/3/94. Statutory Authority: RCW 18.130.050(1) and 34.05.494. 93-08-003 (Order 347), § 246-11-450, filed 3/24/93, effective 4/24/93.]

SECTION VI
HEARING

WAC 246-11-470 Notice of adjudicative proceeding. Notice of an adjudicative proceeding shall be issued pursuant to RCW 34.05.434.

[Statutory Authority: RCW 18.130.050(1) and 34.05.434. 93-08-003 (Order 347), § 246-11-470, filed 3/24/93, effective 4/24/93.]

WAC 246-11-480 Conduct of adjudicative proceeding. (1) The adjudicative proceeding shall be conducted as provided in RCW 34.05.449 through 34.05.455.

(2) The presiding officer may take the following actions to the extent not already determined in a prehearing order:

(a) Conduct the hearing de novo;

(b) Determine the order of presentation of evidence;

(c) Administer oaths and affirmations;

(d) Issue subpoenas;

(e) Rule on procedural matters, objections, motions, and offers of proof;

(f) Receive relevant evidence;

(g) Interrogate witnesses called by the parties in an impartial manner to develop any facts necessary to fairly and adequately decide the matter;

(h) Call additional witnesses and request additional exhibits deemed necessary to complete the record and receive such evidence subject to full opportunity for cross-examination and rebuttal by all parties;

(i) Take any appropriate action necessary to maintain order during the adjudicative proceeding;

(j) Determine whether to permit or require oral argument or briefs and determine the time limits for submission thereof;

(k) Permit photographic and recording equipment at hearing subject to conditions necessary to preserve confidentiality and prevent disruption;

(l) Permit a person to waive any right conferred upon that person by chapter 34.05 RCW or this chapter, except as precluded by law; and

(m) Take any other action necessary and authorized by applicable law or rule.

(3) The presiding officer shall:

(a) Apply as the first source of law governing an issue those statutes and rules deemed applicable to the issue;

(b) If there is no statute or rule governing the issue, resolve the issue on the basis of the best legal authority and reasoning available, including that found in federal and Washington Constitutions, statutes, rules, and court decisions; and

(c) Not declare any statute or rule invalid.

(4) If the validity of any statute or rule is raised as an issue, the presiding officer may permit arguments to be made on the record concerning the issue for the purpose of subsequent review.

(5) Members of the board hearing the matter may ask questions of any witness and may call additional witnesses.

(6) A party may move to disqualify the presiding officer or any member of the board pursuant to RCW 34.05.425(3).

[Statutory Authority: RCW 18.130.050(1) and 18.130.060(3). 94-04-078, § 246-11-480, filed 1/31/94, effective 3/3/94. Statutory Authority: RCW 18.130.050(1). 93-08-003 (Order 347), § 246-11-480, filed 3/24/93, effective 4/24/93.]

WAC 246-11-490 Evidence. (1) The presiding officer shall rule on objections to the admissibility of evidence pursuant to RCW 34.05.452 unless those objections have been addressed in the prehearing order.

(2) The refusal of a witness to answer any question ruled proper shall be grounds for the presiding officer, at his/her discretion, to strike some or all prior testimony by that witness on related matters or to grant a continuance to allow a party to seek a court order to compel the witness to answer.

(3) Each person called as a witness in an adjudicative proceeding shall swear or affirm that the evidence about to be given in the adjudicative proceeding shall be the truth under the provisions of RCW 5.28.020 through 5.28.060.

[Statutory Authority: RCW 18.130.050(1). 93-08-003 (Order 347), § 246-11-490, filed 3/24/93, effective 4/24/93.]

WAC 246-11-500 Proposed order. At the conclusion of the hearing or by a date specified by the presiding officer, the presiding officer may require each party to submit to the presiding officer proposed findings of fact and conclusions of law and a proposed order.

[Statutory Authority: RCW 18.130.050(1) and 18.130.060(3). 94-04-078, § 246-11-500, filed 1/31/94, effective 3/3/94. Statutory Authority: RCW 18.130.050(1). 93-08-003 (Order 347), § 246-11-500, filed 3/24/93, effective 4/24/93.]

WAC 246-11-510 Issuance of final order. If the adjudicative proceeding is heard by the board or a panel of the board the presiding officer and board or panel of the board shall:

(1) Issue a final order containing findings of fact and conclusions of law and an order; and

(2) Cause the adjudicative clerk office to serve a copy of the order on each party and any designated representative of the party.

[Statutory Authority: RCW 18.155.040. 97-13-015, § 246-11-510, filed 6/6/97, effective 7/7/97. Statutory Authority: RCW 18.130.050(1) and 18.130.060(3). 94-04-078, § 246-11-510, filed 1/31/94, effective 3/3/94. Statutory Authority: RCW 18.130.050(1). 93-08-003 (Order 347), § 246-11-510, filed 3/24/93, effective 4/24/93.]

WAC 246-11-520 Standard of proof. (1) The order shall be based on the kind of evidence upon which reasonably prudent persons are accustomed to rely in the conduct of their affairs.

(2) In all cases involving an application for license the burden shall be on the applicant to establish that the application meets all applicable criteria. In all other cases the burden is on the department to prove the alleged factual basis set forth in the initiating document.

(3) Except as otherwise required by law, the burden in all cases is a preponderance of the evidence.

[Statutory Authority: RCW 18.130.050 and 34.05.220. 08-14-137, § 246-11-520, filed 7/1/08, effective 8/1/08. Statutory Authority: RCW 18.130.-050(1). 93-08-003 (Order 347), § 246-11-520, filed 3/24/93, effective 4/24/93.]

WAC 246-11-530 Consolidated proceedings. (1) When two or more applications for adjudicative proceeding involve a similar issue, the applications may be consolidated by the presiding officer and the hearings conducted together. The presiding officer or hearings officer may consolidate on his/her own motion or upon the request of a party.

(2) A party scheduled for a consolidated proceeding may request to withdraw from the consolidated proceeding in favor of an individual proceeding. The presiding officer may grant a motion to withdraw from a consolidated proceeding at any time when good cause is shown.

(3) Each respondent in a consolidated proceeding shall retain the right to representation.

[Statutory Authority: RCW 18.130.050(1) and 18.130.060(3). 94-04-078, § 246-11-530, filed 1/31/94, effective 3/3/94. Statutory Authority: RCW 18.130.050(1) and 34.05.220. 93-08-003 (Order 347), § 246-11-530, filed 3/24/93, effective 4/24/93.]

WAC 246-11-540 Initial order. (1) If the adjudicative proceeding is not heard by the board or panel of the board the presiding officer shall:

(a) Issue an initial order containing proposed findings of fact, conclusions of law, and a proposed order;

(b) Cause the adjudicative clerk office to serve a copy of the initial order on each party and any designated representative of a party; and

(c) Forward the initial order and record of the adjudicative proceeding to the adjudicative clerk office.

(2) Initial orders on brief adjudicative proceedings shall become final orders as provided in WAC 246-11-540.

(3) Following receipt of initial orders in matters other than brief adjudicative proceedings, the board shall review the initial order and the record as provided in RCW 34.05.-464, and issue a final order as provided in WAC 246-11-560.

[Statutory Authority: RCW 18.155.040. 97-13-015, § 246-11-540, filed 6/6/97, effective 7/7/97. Statutory Authority: RCW 18.130.050(1) and 18.130.060(3). 94-04-078, § 246-11-540, filed 1/31/94, effective 3/3/94. Statutory Authority: RCW 18.130.050(1). 93-08-003 (Order 347), § 246-11-540, filed 3/24/93, effective 4/24/93.]

SECTION VII
POST HEARING PROCESS

WAC 246-11-550 Appeal from initial order. (1) Any party may file a written petition for administrative review of an initial order issued under WAC 246-11-430 or 246-11-540 stating the specific grounds upon which exception is taken and the relief requested.

(2) Petitions for administrative review must be served upon the opposing party and filed with the adjudicative clerk office within twenty-one days of service of the initial order.

(3) The opposing party may file a response to a petition for administrative review as provided in this section. The response shall be filed at the place specified in subsection (2) of this section. The party filing the response shall serve a copy of the response upon the party requesting administrative review. If the initial order was entered pursuant to WAC 246-11-430, the response will be filed within ten days of service of the petition. In all other matters, the response will be filed within twenty days of service of the petition.

[Statutory Authority: RCW 18.155.040. 97-13-015, § 246-11-550, filed 6/6/97, effective 7/7/97. Statutory Authority: RCW 18.130.050 and 43.70.040. 96-21-027, § 246-11-550, filed 10/7/96, effective 11/7/96. Statutory Authority: RCW 18.130.050(1) and 34.05.464. 93-08-003 (Order 347), § 246-11-550, filed 3/24/93, effective 4/24/93.]

WAC 246-11-560 Final orders. (1) The form and content of final orders shall be as follows:

(a) Final orders shall contain findings of fact, conclusions of law, and an order. All final orders shall be signed by a member of the panel of board members who heard the matter.

(b) Final orders may adopt by reference the initial order in whole or in part.

(c) Final orders may modify or revise the initial order in whole or in part.

(2) Final orders shall be served upon the parties and their representatives as provided in WAC 246-11-080.

(3) Final orders shall be issued following:

(a) A review of the record;

(b) A review of the initial order, if any;

(c) A review of any request for review of the initial order and any response thereto; and

(d) Consideration of protection of the public health and welfare.

(4) Unless a later date is stated in the final order, final orders shall be effective when entered but a party shall not be required to comply with a final order until the order is served upon that party.

(5) Final orders may contain orders that specified portions of the agency record shall not be disclosed as public records if necessary to protect privacy interests, the public welfare, or vital governmental functions. Such orders shall include but are not limited to protective orders issued during the proceeding or pursuant to WAC 246-11-400.

[Statutory Authority: RCW 18.130.050(1) and 18.130.060(3). 94-04-078, § 246-11-560, filed 1/31/94, effective 3/3/94. Statutory Authority: RCW 18.130.050(1), 34.05.464, 34.05.473 and chapter 42.17 RCW. 93-08-003 (Order 347), § 246-11-560, filed 3/24/93, effective 4/24/93.]

WAC 246-11-570 Stay of final orders. No final order will be stayed except by its own terms or by order of a court of competent jurisdiction.

[Statutory Authority: RCW 18.130.050(1) and 34.05.467. 93-08-003 (Order 347), § 246-11-570, filed 3/24/93, effective 4/24/93.]

WAC 246-11-580 Reconsideration of final orders. (1) Within ten days of service of a final order, either party may file a petition for reconsideration, stating the specific grounds upon which reconsideration is requested and the relief requested.

(2) Grounds for reconsideration shall be limited to:

(a) Specific errors of fact or law; or

(b) Implementation of the final order would require department activities inconsistent with current department practice; or

(c) Specific circumstances render the person requesting the reconsideration unable to comply with the terms of the order.

(3) Petitions for reconsideration must be served upon the opposing party and filed with the adjudicative clerk office within ten days of service of the final order.

(4) If reconsideration is requested based on an error of fact, the request for reconsideration shall contain specific reference to the record. If reconsideration is requested based on testimony of record, the request for reconsideration shall contain specific reference to the testimony. The presiding officer may require that the party requesting reconsideration submit a copy of the transcript of the adjudicative proceeding and provide specific reference to the transcript.

(5) The petition for reconsideration is denied if, within twenty days of the date the petition is filed, the presiding officer:

(a) Denies the petition;

(b) Does not act upon the petition; or

(c) Does not serve the parties with notice of the date by which he/she will act on the petition.

(6) If the presiding officer determines to act upon the petition, the opposing party shall be provided at least ten days in which to file a response to the petition.

(7) Disposition of petitions for reconsideration shall be in the form of a written order denying the petition, granting the petition and dissolving or modifying the final order, or granting the petition and setting the matter for further proceedings.

[Statutory Authority: RCW 18.155.040. 97-13-015, § 246-11-580, filed 6/6/97, effective 7/7/97. Statutory Authority: RCW 18.130.050(1) and 18.130.060(3). 94-04-078, § 246-11-580, filed 1/31/94, effective 3/3/94. Statutory Authority: RCW 18.130.050(1) and 34.05.470. 93-08-003 (Order 347), § 246-11-580, filed 3/24/93, effective 4/24/93.]

WAC 246-11-590 Agency record of adjudicative proceedings. (1) The department shall maintain an official record of each adjudicative proceeding.

(2) The record shall include:

(a) Notices of all proceedings;

(b) Any prehearing order;

(c) Any motions, pleadings, briefs, petitions, and requests filed, and rulings thereon;

(d) Evidence received or considered;

(e) A statement of matters officially noted;

(f) Offers of proof and objections and rulings thereon;

(g) Any proposed findings, requested orders, and exceptions;

(h) Any recording of the adjudicative proceeding and any transcript of all or part of the adjudicative proceeding considered before final disposition of the matter;

(i) Any final order, initial order, or order on reconsideration; and

(j) Matters placed on the record following an ex parte communication, if any.

(3) The record shall be subject to disclosure as provided by RCW 42.17.250 through 42.17.340, and by WAC 246-11-130, except as limited by protective orders and provisions contained in the final order.

[Statutory Authority: RCW 18.130.050(1) and 18.130.060(3). 94-04-078, § 246-11-590, filed 1/31/94, effective 3/3/94. Statutory Authority: RCW 18.130.050(1), 34.05.476 and chapter 42.17 RCW. 93-08-003 (Order 347), § 246-11-590, filed 3/24/93, effective 4/24/93.]

WAC 246-11-600 Judicial review. (1) Judicial review of actions taken under this chapter shall be as provided in RCW 34.05.510 et seq.

(2) Notice of the opportunity for judicial review shall be provided in all final orders.

(3) Following a request for judicial review, the record forwarded to the reviewing court shall be those portions of the agency record designated by the parties within the time period set by the board.

[Statutory Authority: RCW 18.130.050(1) and 18.130.060(3). 94-04-078, § 246-11-600, filed 1/31/94, effective 3/3/94. Statutory Authority: RCW 18.130.050(1) and 34.05.510. 93-08-003 (Order 347), § 246-11-600, filed 3/24/93, effective 4/24/93.]

WAC 246-11-610 Vacating an order for reason of default or withdrawal. (1) A party may petition to vacate a default order entered against that party for failing to attend an adjudicative proceeding requested by that party by:

(a) Specifying the grounds relied upon in the petition; and

(b) Filing the petition at the adjudicative clerk office within seven days of service of the default order.

(2) The presiding officer shall consider the petition and shall:

(a) Grant the motion to vacate and reinstate the application for adjudicative proceeding, and may impose conditions on licensure pending final adjudication; or

(b) Deny the motion to vacate the default order.

[Statutory Authority: RCW 18.155.040. 97-13-015, § 246-11-610, filed 6/6/97, effective 7/7/97. Statutory Authority: RCW 18.130.050(1) and 18.130.060(3). 94-04-078, § 246-11-610, filed 1/31/94, effective 3/3/94. Statutory Authority: RCW 18.130.050(1) and 34.05.220. 93-08-003 (Order 347), § 246-11-610, filed 3/24/93, effective 4/24/93.]

Chapter 246-12 WAC

ADMINISTRATIVE PROCEDURES AND REQUIREMENTS FOR CREDENTIALED HEALTH CARE PROVIDERS

WAC

PART 1
GENERAL PROVISIONS

246-12-001 Purpose and scope.
246-12-010 Definitions.

PART 2
INITIAL AND RENEWAL CREDENTIALING OF PRACTITIONERS

246-12-020 How to obtain an initial credential.
246-12-030 How to renew a credential.
246-12-040 How to return to active status when a credential has expired.

PART 3
INITIAL AND RENEWAL CREDENTIALING OF BUSINESSES

246-12-060 How to obtain an initial business credential.
246-12-070 How to renew a business credential.
246-12-080 When a business credential expires.

PART 4
INACTIVE CREDENTIAL

246-12-090 How to obtain an inactive credential.
246-12-100 How to renew an inactive credential.
246-12-110 How to return to active status from inactive status.

PART 5
RETIRED ACTIVE CREDENTIAL

246-12-120 How to obtain a retired active credential.
246-12-130 How to renew a retired active credential.
246-12-140 How to return to active status from retired active status.

PART 6
CREDENTIAL SUSPENSIONS

246-12-160 How to return to active status following a mandated suspension.
246-12-165 How to return to active status following a disciplinary suspension.

PART 7
CONTINUING EDUCATION

246-12-170 When is continuing education required?
246-12-180 How to prove compliance.
246-12-190 Auditing for compliance.
246-12-200 What is acceptable audit documentation?
246-12-210 When is a practitioner exempt from continuing education?
246-12-220 How credit hours for continuing education courses are determined.

246-12-230 Carrying over of continuing education credits.
246-12-240 Taking the same course more than once during a reporting cycle.

PART 8
AIDS PREVENTION AND INFORMATION EDUCATION REQUIREMENTS

246-12-250 Definitions.
246-12-260 Who must obtain AIDS education?
246-12-270 Acceptable AIDS education and training.
246-12-280 What is acceptable documentation?

PART 9
DUPLICATE CREDENTIALS OR WALL CERTIFICATES

246-12-290 How to obtain a duplicate credential or wall certificate.

PART 10
PRACTITIONER NAME AND ADDRESS CHANGES

246-12-300 Name changes.
246-12-310 Address changes.
246-12-320 Other information.

PART 11
FEES, PAYMENTS AND REFUNDS

246-12-330 General information.
246-12-340 Refund of fees.
246-12-350 Making payments.
246-12-360 Other information.

PART 12
RETIRED VOLUNTEER MEDICAL WORKERS

246-12-400 Who qualifies for an initial retired volunteer medical worker license?
246-12-410 How to obtain an initial retired volunteer medical worker license.
246-12-420 When can you practice and what can you do?
246-12-430 How to renew your retired volunteer medical worker license.
246-12-440 Continuing competency.
246-12-450 How to return to active status.

PART 1
GENERAL PROVISIONS

WAC 246-12-001 Purpose and scope. The rules in this chapter are intended to ensure consistent application of administrative procedures and requirements for licensure, certification and registration of health care practitioners credentialed under the Uniform Disciplinary Act (RCW 18.130.-040), except those credentialed under chapter 18.73 RCW (emergency medical services). Within the rules there are several references to additional requirements which may be unique to a profession. Examples are the renewal cycle, fees, continuing education or competency requirements. Refer to individual profession's laws and rules for further guidance and information. Health profession laws and rules are available in public libraries and in publications by the department of health.

[Statutory Authority: RCW 43.70.280. 98-05-060, § 246-12-001, filed 2/13/98, effective 3/16/98.]

WAC 246-12-010 Definitions. (1) "Business": A business is an adult family home provider owned by a corporation regulated under chapter 18.48 RCW; a pharmaceutical firm regulated under chapter 18.64 RCW; or a nursing pool regulated under chapter 18.52C RCW; or a health care assistant regulated under chapter 18.135 RCW.

(2) "Credential": A credential is a license, certification, or registration issued to a person to practice a regulated health care profession. Whether the credential is a license, certification or registration is determined by the law regulating the profession.

(3) "Declaration": A declaration is a statement signed by the practitioner on a form provided by the department of health for verifying continuing education, AIDS training, or other requirements. When required, declarations must be completed and signed to be effective verification to the department.

(4) "Disciplinary suspension": The regulatory entity places the credential in disciplinary suspension status when there is a finding of unprofessional conduct. Refer to the Uniform Disciplinary Act (RCW 18.130.160).

(5) "Local organization for emergency services or management": Has the same meaning as that found in RCW 38.52.010.

(6) "Mandated suspension": The department of health places the credential in mandated suspension status when a law requires suspension of a credential under certain circumstances. This suspension is nondiscretionary for the department of health. Examples of mandated suspension are default on a student loan and failure to pay child support. The practitioner may not practice while on mandated suspension. The credential must be returned to active status before the practitioner may practice. See Part 6 of this chapter.

(7) "Practitioner": A practitioner is an individual health care provider listed under the Uniform Disciplinary Act, RCW 18.130.040.

(8) "Regulatory entities": A "regulatory entity" is a board, commission, or the secretary of the department of health designated as the authority to regulate one or more professions or occupations in this state. Practitioner health care practice acts and the Uniform Disciplinary Act (UDA) designate whether it is a board, commission, or the secretary of the department of health which has the authority to adopt rules, discipline health care providers, and determine requirements for initial licensure and continuing education requirements.

The regulatory entity determines whether disciplinary action should be taken on a credential for unprofessional conduct. These actions may include revocation, suspension, practice limitations or conditions upon the practitioner.

(9) "Renewal": Every credential requires renewal. The renewal cycle is either one, two, or three years, depending on the profession.

(10) "Secretary": The secretary is the secretary of the department of health or his or her designee.

(11) "Status": All credentials are subject to the Uniform Disciplinary Act (UDA) regardless of status. A credential status may be in any one of the following:

(a) Most credentials are in **"active"** status. These practitioners are authorized to practice the profession. These practitioners need to renew the credential each renewal cycle. See Part 2 of this chapter.

(b) The department of health places the credential in **"expired"** status if the credential is not renewed on time. While in expired status, the practitioner is not authorized to practice. Practice on an expired status is a violation of law and subject to disciplinary action. See Part 2 of this chapter.

(c) A practitioner may place the credential in **"inactive"** status if authorized by the regulatory entity. This means the

practitioner is not practicing the profession. See Part 4 of this chapter.

(d) A practitioner may place the credential in **"retired active"** status if authorized by the regulatory entity. This means the practitioner can practice only intermittently or in emergencies. See Part 5 of this chapter.

[Statutory Authority: RCW 18.130.050 and 18.130.360. 07-21-133, § 246-12-010, filed 10/23/07, effective 12/1/07. Statutory Authority: RCW 43.70.280. 98-05-060, § 246-12-010, filed 2/13/98, effective 3/16/98.]

PART 2
INITIAL AND RENEWAL CREDENTIALING OF PRACTITIONERS

WAC 246-12-020 How to obtain an initial credential. (1) An initial credential for a practitioner is issued once all eligibility requirements are met.

(2) To obtain an initial credential, the practitioner must:

(a) Pay applicable application, examination and licensing fees;

(b) Submit an application on forms approved by the secretary;

(c) Submit supporting documentation required by the regulatory entity.

(3) The initial credential will expire on the practitioner's birthday, except for faculty or postgraduate education credentials authorized by law. Initial credentials issued within ninety days of the practitioner's birthday do not expire until the practitioner's next birthday.

[Statutory Authority: RCW 43.70.280. 98-05-060, § 246-12-020, filed 2/13/98, effective 3/16/98.]

WAC 246-12-030 How to renew a credential. (1) The expiration date for all credentials is the practitioner's birthday, except for faculty or postgraduate education credentials authorized by law.

(2) A credential period may be one or two years. To determine the renewal cycle, refer to the individual laws and rules pertaining to your profession.

(3) To renew a credential, the practitioner must:

(a) Pay the renewal fee;

(b) Pay the substance abuse monitoring surcharge, if required by the profession; and

(c) Provide written declarations or documentation, if required for the profession.

(4) Prior to the credential expiration date, courtesy renewal notices are mailed to the address on file. Practitioners should return the renewal notice when renewing their credential. Failure to receive a courtesy renewal notice does not relieve or exempt the credential renewal requirement.

(5) Renewal fees are accepted by the department no sooner than ninety days prior to the expiration date.

[Statutory Authority: RCW 43.70.280. 98-05-060, § 246-12-030, filed 2/13/98, effective 3/16/98.]

WAC 246-12-040 How to return to active status when a credential has expired. (1) The credential status is **expired** if the practitioner does not renew on or before the expiration date. The practitioner must not practice until the credential is returned to active status.

(2) Any renewal that is postmarked or presented to the department after midnight on the expiration date is late, and subject to a **late renewal penalty fee.** The late penalty fee will be waived if:

(a) The credential expires on a day the department is closed for business; and

(b) Payment is received at the department of health, health professions quality assurance main office on the next business day.

(3) A credential is returned to active status by complying with the following:

(a) Expired for one renewal cycle or less:

(i) Pay the late renewal penalty fee;

(ii) Pay the current renewal fee;

(iii) Pay the current substance abuse monitoring surcharge, if required by the profession;

(iv) Provide written declarations or documentation, if required for the profession; and

(v) Comply with current continuing education or continuing competency requirements if required by the profession.

(b) Expired for more than one renewal cycle but less than three years:

(i) Complete an abbreviated application form;

(ii) Pay the late renewal penalty fee;

(iii) Pay the current renewal fee;

(iv) Pay the current substance abuse monitoring surcharge, if required by the profession;

(v) Pay the expired credential reissuance fee;

(vi) Provide a written declaration that no action has been taken by a state or federal jurisdiction or hospital which would prevent or restrict the practitioner's practice of the profession;

(vii) Provide a written declaration that he or she has not voluntarily given up any credential or privilege or has not been restricted in the practice of the profession in lieu of or to avoid formal action;

(viii) Provide a written declaration that continuing education and competency requirements for the two most recent years have been met, if required for the profession to maintain an active credential; and

(ix) Provide other written declarations or documentation, if required for the profession.

(c) Expired for over three years:

(i) Complete an abbreviated application form;

(ii) Pay the late renewal penalty fee;

(iii) Pay the current renewal fee;

(iv) Pay the current substance abuse monitoring surcharge, if required by the profession;

(v) Pay the expired credential reissuance fee;

(vi) Satisfy other competency requirements of the regulatory entity, if required;

(vii) Provide a written declaration that no action has been taken by a state or federal jurisdiction or hospital which would prevent or restrict the practitioner's practice of the profession;

(viii) Provide a written declaration that he or she has not voluntarily given up any credential or privilege or has not been restricted in the practice of the profession in lieu of or to avoid formal action;

(ix) Provide a written declaration that continuing education or competency requirements for the two most recent years have been met, if required for the profession to maintain an active credential;

(x) Provide other written declarations or documentation, if required for the profession; and

(xi) If not previously provided, provide proof of AIDS education as required for the profession and in Part 8 of this chapter.

[Statutory Authority: RCW 43.70.280. 03-19-136, § 246-12-040, filed 9/17/03, effective 10/18/03; 98-05-060, § 246-12-040, filed 2/13/98, effective 3/16/98.]

PART 3
INITIAL AND RENEWAL CREDENTIALING OF BUSINESSES

WAC 246-12-060 How to obtain an initial business credential. An initial credential for a business is issued once all eligibility requirements are met. To obtain an initial credential, the business must:

(1) Pay all applicable application and license fees;

(2) Submit an application on forms approved by the secretary;

(3) Submit supporting documentation required by the regulatory entity.

[Statutory Authority: RCW 43.70.280. 98-05-060, § 246-12-060, filed 2/13/98, effective 3/16/98.]

WAC 246-12-070 How to renew a business credential. (1) A business expires on a date determined by the regulatory entity.

(2) A credential period may be one or two years. Refer to the profession laws and rules to determine the renewal cycle and expiration date.

(3) To renew a credential the business must:

(a) Pay the renewal fee; and

(b) Provide written declarations or documentation, if required for the profession.

(4) Prior to the credential expiration date, courtesy renewal notices are mailed to the address on file. Businesses should return the renewal notice when renewing their credential. Failure to receive a courtesy renewal notice does not relieve or exempt the credential renewal requirement.

(5) Renewal fees are accepted by the department within ninety days prior to the expiration date.

[Statutory Authority: RCW 43.70.280. 98-05-060, § 246-12-070, filed 2/13/98, effective 3/16/98.]

WAC 246-12-080 When a business credential expires. (1) The business credential expires if the credential is not renewed on or before the expiration date. The business must not open for business or otherwise operate until the credential is renewed.

(2) A business credential is renewed by complying with the following:

(a) Expired for three years or less:

(i) Pay the late renewal penalty fee;

(ii) Pay the current renewal fee for each renewal cycle where the credential was expired; and

(iii) Provide written declarations or documentation, if required for the profession.

(b) Expired more than three years:

(i) Comply with the qualifications and procedures for initial credentialing; and

(ii) Pay initial credentialing fee.

[Statutory Authority: RCW 43.70.280. 98-05-060, § 246-12-080, filed 2/13/98, effective 3/16/98.]

PART 4
INACTIVE CREDENTIAL

WAC 246-12-090 How to obtain an inactive credential. A practitioner may obtain an inactive credential if authorized by the regulatory entity. Refer to the profession rules to determine if this status is available.

(1) To obtain an inactive credential the practitioner must submit a letter notifying the department of health of the intent to obtain an inactive credential.

(2) A practitioner may apply for an inactive credential if he or she meets the following criteria:

(a) Holds an active Washington state credential;

(b) Is in good standing; and

(c) Will not practice in Washington.

(3) The practitioner may obtain an inactive credential at any time the criteria in subsection (2) of this section are met. The fee for the initial inactive credential will be due when the active credential expires. Portions of the current renewal fee will not be prorated or refunded for the remaining active renewal cycle.

[Statutory Authority: RCW 43.70.280. 98-05-060, § 246-12-090, filed 2/13/98, effective 3/16/98.]

WAC 246-12-100 How to renew an inactive credential. (1) The expiration for all credentials is the practitioner's birthday. To renew an inactive credential, the practitioner must:

(a) Pay the inactive credential renewal fee; and

(b) Pay the substance abuse monitoring surcharge, if required by the profession.

(2) To determine the renewal cycle, refer to the individual laws and rules pertaining to your profession.

(3) Inactive credential renewal fees are accepted by the department no sooner than ninety days prior to the expiration date.

(4) Prior to the inactive credential expiration date, courtesy renewal notices are mailed to the address on file. Practitioners should return the renewal notice when renewing their credential. Failure to receive a courtesy renewal notice does not relieve or exempt the inactive credential renewal requirement.

[Statutory Authority: RCW 43.70.280. 98-05-060, § 246-12-100, filed 2/13/98, effective 3/16/98.]

WAC 246-12-110 How to return to active status from inactive status. To change an inactive credential to an active credential status the practitioner must:

(1) Notify the department in writing of the change;

(2) Pay the appropriate current active renewal fee;

(3) Pay the current substance abuse monitoring surcharge, if required by the profession.

(4) Provide a written declaration that no action has been taken by a state or federal jurisdiction or hospital which would prevent or restrict the practitioner's practice of the profession;

(5) Provide a written declaration that he or she has not voluntarily given up any credential or privilege or has not been restricted in the practice of the profession in lieu of or to avoid formal action;

(6) Provide a written declaration that continuing education and competency requirements for the two most recent years have been met, if required for the profession;

(7) Provide other written declarations or documentation, if required for the profession;

(8) Satisfy other competency requirements of the regulatory entity; if required; and

(9) If not previously provided, provide proof of AIDS education as required for the profession and in Part 8 of this chapter.

[Statutory Authority: RCW 43.70.280. 98-05-060, § 246-12-110, filed 2/13/98, effective 3/16/98.]

PART 5
RETIRED ACTIVE CREDENTIAL

WAC 246-12-120 How to obtain a retired active credential. A practitioner may obtain a retired active status credential if authorized by the regulatory entity. Refer to the profession rules to determine if this status is available.

(1) To obtain a retired active credential the practitioner must submit a letter notifying the department of health of the intent to practice only on an intermittent or emergency basis.

(2) A practitioner may apply for a retired active credential (refer to RCW 18.130.250) if he or she meets the following criteria:

(a) Holds an active Washington state credential;

(b) Is in good standing; and either

(c) Will practice no more than ninety days each year in Washington state; or

(d) Will practice only in emergency circumstances such as earthquakes, floods, times of declared war or other states of emergency.

(3) The practitioner may obtain a retired active credential at any time the criteria in subsection (2) of this section are met. The fee for the initial retired active credential will be due when the active credential expires. Portions of the current renewal fee will not be prorated or refunded for the remaining active renewal cycle.

(4) The profession may define specific practice settings in which services may be provided. Refer to the laws and rules of the profession to determine if specific practice settings are identified.

[Statutory Authority: RCW 43.70.280. 98-05-060, § 246-12-120, filed 2/13/98, effective 3/16/98.]

WAC 246-12-130 How to renew a retired active credential. (1) The expiration for all credentials is the practitioner's birthday. To determine the renewal cycle, refer to the individual laws and rules pertaining to your profession.

(2) To renew a retired active credential, the practitioner must:

(a) Pay the retired active credential renewal fee;

(b) Pay the substance abuse monitoring surcharge, if required by the profession;

(c) Provide a written declaration stating that he or she practiced only intermittently or in an emergency during the previous renewal cycle;

(d) Provide a written declaration stating that continuing education or competency requirements have been met, if required for the profession; and

(e) Provide other written declarations or documentation, if required for the profession.

(3) Retired active credential renewal fees are accepted by the department no sooner than ninety days prior to the expiration date.

(4) Prior to the retired active credential expiration date, courtesy renewal notices are mailed to the address on file. Practitioners should return the renewal notice when renewing their credential. Failure to receive a courtesy renewal notice does not relieve or exempt the retired active credential renewal requirement.

[Statutory Authority: RCW 43.70.280. 98-05-060, § 246-12-130, filed 2/13/98, effective 3/16/98.]

WAC 246-12-140 How to return to active status from retired active status. To change a retired active credential to an active credential status the practitioner must:

(1) Notify the department in writing of the change;

(2) Pay the appropriate current active renewal fee;

(3) Pay the current substance abuse monitoring surcharge, if required by the profession.

(4) Provide a written declaration that no action has been taken by a state or federal jurisdiction or hospital which would prevent or restrict the practitioner's practice of the profession;

(5) Provide a written declaration that he or she has not voluntarily given up any credential or privilege or has not been restricted in the practice of the profession in lieu of or to avoid formal action;

(6) Provide a written declaration that continuing education and competency requirements have been met, if required for the profession;

(7) Provide other written declarations or documentation, if required for the profession;

(8) Satisfy other competency requirements of the regulatory entity, if required; and

(9) If not previously provided, provide proof of AIDS education as required for the profession and in Part 8 of this chapter.

[Statutory Authority: RCW 43.70.280. 98-05-060, § 246-12-140, filed 2/13/98, effective 3/16/98.]

PART 6
CREDENTIAL SUSPENSIONS

WAC 246-12-160 How to return to active status following a mandated suspension. (1) The department of health places the credential in mandated suspension status when a law requires suspension of a credential under certain circumstances. This suspension is not discretionary for the department of health. Examples of mandated suspension are default on a student loan and failure to pay child support. The practitioner may not practice while on mandated suspension.

The credential must be returned to active status before the practitioner may practice.

(2) A credential is returned to active status by complying with the following:

(a) Meet all the requirements outlined in the order mandating the suspension;

(b) Pay the current renewal fee, if due;

(c) Pay the substance abuse monitoring surcharge if required by the profession;

(d) Pay a "return from mandated suspension fee" of two hundred forty-five dollars. Standard renewal fees are not required during the period of the suspension;

(e) Provide written declaration that all continuing education and competency requirements for the entire suspension period have been met, if required by the profession;

(f) Provide other written declarations or documentation, if required for the profession; and

(g) If the mandated suspension was for more than three years the practitioner must also comply with any specific requirements identified in rule by that profession's regulatory entity.

[Statutory Authority: RCW 43.70.280. 98-05-060, § 246-12-160, filed 2/13/98, effective 3/16/98.]

WAC 246-12-165 How to return to active status following a disciplinary suspension. (1) The regulatory entity may place a credential on disciplinary suspension when there is a finding of unprofessional conduct. The practitioner may not practice while on suspension unless the suspension is stayed. The credential must be returned to active status before the practitioner may practice.

(2) A credential is returned to active status by complying with the following:

(a) Meet all the requirements outlined in the disciplinary order;

(b) Pay the current renewal fee, if due. Standard renewal fees are not required during the period of the suspension unless the suspension is stayed;

(c) Pay the substance abuse monitoring surcharge if required by the profession;

(d) Provide written declaration that all continuing education and competency requirements for the entire suspension period have been met, if required by the profession; and

(e) Provide other written declarations or documentation, if required for the profession.

[Statutory Authority: RCW 43.70.280. 98-05-060, § 246-12-165, filed 2/13/98, effective 3/16/98.]

PART 7
CONTINUING EDUCATION

WAC 246-12-170 When is continuing education required? Continuing education is required for renewal of a credential only if authorized in law. The regulatory entity defines the continuing education requirements. Practitioners should refer to the laws and rules relating to their profession to determine if continuing education is required.

[Statutory Authority: RCW 43.70.280. 98-05-060, § 246-12-170, filed 2/13/98, effective 3/16/98.]

WAC 246-12-180 How to prove compliance. If continuing education is required for renewal, the practitioner must verify compliance by submitting a signed declaration of compliance.

[Statutory Authority: RCW 43.70.280. 98-05-060, § 246-12-180, filed 2/13/98, effective 3/16/98.]

WAC 246-12-190 Auditing for compliance. Up to twenty-five percent of the practitioners are randomly audited for continuing education compliance after the credential is renewed. It is the practitioner's responsibility to submit documentation of completed continuing education activities at the time of the audit. Failure to comply with the audit documentation request or failure to supply acceptable documentation within sixty days may result in disciplinary action.

[Statutory Authority: RCW 43.70.280. 98-05-060, § 246-12-190, filed 2/13/98, effective 3/16/98.]

WAC 246-12-200 What is acceptable audit documentation? Practitioners must:

(1) Prove compliance which may include course or program certificates of training or transcripts. Refer to the rules of your profession for more specific guidance.

(2) Keep records for four years documenting attendance description of learning.

[Statutory Authority: RCW 43.70.280. 98-05-060, § 246-12-200, filed 2/13/98, effective 3/16/98.]

WAC 246-12-210 When is a practitioner exempt from continuing education? A practitioner may be excused from or granted an extension of continuing education requirements due to illness or other extenuating circumstances. The profession's regulatory entity determines when the requirements may be waived or may grant an extension.

[Statutory Authority: RCW 43.70.280. 98-05-060, § 246-12-210, filed 2/13/98, effective 3/16/98.]

WAC 246-12-220 How credit hours for continuing education courses are determined. A credit hour is defined as time actually spent in a course or other activities as determined by the regulatory entity as fulfilling continuing education requirements. A credit hour for time actually spent in a course can not be less than fifty minutes.

[Statutory Authority: RCW 43.70.280. 98-05-060, § 246-12-220, filed 2/13/98, effective 3/16/98.]

WAC 246-12-230 Carrying over of continuing education credits. Continuing education hours in excess of the required hours earned in a reporting period cannot be carried forward to the next reporting cycle.

[Statutory Authority: RCW 43.70.280. 98-05-060, § 246-12-230, filed 2/13/98, effective 3/16/98.]

WAC 246-12-240 Taking the same course more than once during a reporting cycle. The same course taken more than once during a reporting cycle will only be counted once.

[Statutory Authority: RCW 43.70.280. 98-05-060, § 246-12-240, filed 2/13/98, effective 3/16/98.]

PART 8
AIDS PREVENTION AND INFORMATION EDUCATION REQUIREMENTS

WAC 246-12-250 Definitions. (1) "Acquired immunodeficiency syndrome" or "AIDS" means the clinical syndrome of HIV-related illness as defined by the board of health by rule.

(2) "Office on AIDS" means that section with the department of health or any successor department with jurisdiction over public health matters as defined in chapter 70.24 RCW.

[Statutory Authority: RCW 43.70.280. 98-05-060, § 246-12-250, filed 2/13/98, effective 3/16/98.]

WAC 246-12-260 Who must obtain AIDS education? All practitioners must demonstrate completion of four or seven clock hours of AIDS education prior to initially obtaining a health care credential. Refer to the specific profession rules to determine the number of hours of AIDS education and training that are required.

[Statutory Authority: RCW 43.70.280. 98-05-060, § 246-12-260, filed 2/13/98, effective 3/16/98.]

WAC 246-12-270 Acceptable AIDS education and training. (1) The regulatory entity will accept education and training that is consistent with the model curriculum available from the office on AIDS.

(2) AIDS education and training must include, but is not limited to, the following: Etiology and epidemiology; testing and counseling; infection control guidelines; clinical manifestations and treatment; legal and ethical issues to include confidentiality; and psychosocial issues to include special population considerations.

[Statutory Authority: RCW 43.70.280. 98-05-060, § 246-12-270, filed 2/13/98, effective 3/16/98.]

WAC 246-12-280 What is acceptable documentation? Practitioners must:

(1) Provide a written declaration that the minimum education and training has been completed;

(2) Keep records for two years documenting training and description of learning; and

(3) Be prepared to validate, through submission of these records, that training has taken place.

[Statutory Authority: RCW 43.70.280. 98-05-060, § 246-12-280, filed 2/13/98, effective 3/16/98.]

PART 9
DUPLICATE CREDENTIALS OR WALL CERTIFICATES

WAC 246-12-290 How to obtain a duplicate credential or wall certificate. Practitioners may obtain a duplicate credential or wall certificate by providing a written request and paying a fee established by the secretary.

[Statutory Authority: RCW 43.70.280. 98-05-060, § 246-12-290, filed 2/13/98, effective 3/16/98.]

PART 10
PRACTITIONER NAME AND ADDRESS CHANGES

WAC 246-12-300 Name changes. It is the responsibility of each practitioner to maintain his or her correct name on file with the department. Requests for name changes must be submitted in writing along with acceptable documentation. Acceptable documentation includes a copy of a marriage certificate, divorce decree or court order of legal name change.

[Statutory Authority: RCW 43.70.280. 98-05-060, § 246-12-300, filed 2/13/98, effective 3/16/98.]

WAC 246-12-310 Address changes. It is the responsibility of each practitioner to maintain his or her current address on file with the department. Requests for address changes may be made either by telephone or in writing. The mailing address on file with the department will be used for mailing of all official matters to the practitioner.

[Statutory Authority: RCW 43.70.280. 98-05-060, § 246-12-310, filed 2/13/98, effective 3/16/98.]

WAC 246-12-320 Other information. Refer to WAC 246-01-100 and 246-11-060 for more information on maintaining a current address with the department.

[Statutory Authority: RCW 43.70.280. 98-05-060, § 246-12-320, filed 2/13/98, effective 3/16/98.]

PART 11
FEES, PAYMENTS AND REFUNDS

WAC 246-12-330 General information. The costs of health care professional credentialing programs must be fully supported by members of that profession. The amount of all fees are established by the secretary and set by rule. Fees can be found in rules pertaining to each profession.

[Statutory Authority: RCW 43.70.280. 98-05-060, § 246-12-330, filed 2/13/98, effective 3/16/98.]

WAC 246-12-340 Refund of fees. Fees submitted with applications for initial credentialing, examinations, renewal, and other fees associated with the licensing and regulation of the profession are nonrefundable.

[Statutory Authority: RCW 43.70.280. 98-05-060, § 246-12-340, filed 2/13/98, effective 3/16/98.]

WAC 246-12-350 Making payments. (1) Make checks or money orders payable to the department of health.

(2) Practitioners should include their credential number on the check, draft or money order.

(3) Applicants should include profession for which they are applying on the check, draft or money order.

(4) Send check, draft or money order to:

Department of Health
P.O. Box 1099
Olympia, Washington 98507-1099

[Statutory Authority: RCW 43.70.280. 98-05-060, § 246-12-350, filed 2/13/98, effective 3/16/98.]

WAC 246-12-360 Other information. Refer to RCW 43.70.250, 43.70.320 and WAC 246-08-560 for more information relating to fees and refunds.

[Statutory Authority: RCW 43.70.280. 98-05-060, § 246-12-360, filed 2/13/98, effective 3/16/98.]

PART 12
RETIRED VOLUNTEER MEDICAL WORKERS

WAC 246-12-400 Who qualifies for an initial retired volunteer medical worker license? (1) To be eligible for a retired volunteer medical worker license, a person must:

(a) Have held a license issued by a disciplining authority under RCW 18.130.040 that was in active status within the ten years prior to an initial application for a retired volunteer medical worker license;

(b) Have no restrictions on their ability to obtain an active license; and

(c) Be currently registered as a volunteer emergency worker with a local organization for emergency services or management.

(2) A person is not eligible for a retired volunteer medical worker license if they hold any current license issued by a disciplining authority under RCW 18.130.040.

[Statutory Authority: RCW 18.130.050 and 18.130.360. 07-21-133, § 246-12-400, filed 10/23/07, effective 12/1/07.]

WAC 246-12-410 How to obtain an initial retired volunteer medical worker license. (1) To obtain an initial retired volunteer medical worker license, a person must:

(a) Meet the requirements in WAC 246-12-400;

(b) Submit an application on forms approved by the secretary; and

(c) Submit proof of current registration as a volunteer emergency worker with a local organization for emergency services or management.

(2) There is no application fee.

(3) The retired volunteer medical worker's initial license expires on the person's third birthday after issuance and may be renewed as provided in WAC 246-12-430.

[Statutory Authority: RCW 18.130.050 and 18.130.360. 07-21-133, § 246-12-410, filed 10/23/07, effective 12/1/07.]

WAC 246-12-420 When can you practice and what can you do? (1) A retired volunteer medical worker can practice only when:

(a) There is a declared emergency, disaster, or authorized training event that has been given a mission number by the department of emergency management; and

(b) The local organization for emergency services or management, or designee, has activated the retired volunteer medical worker.

(2) A retired volunteer medical worker can only:

(a) Work the duties assigned;

(b) Work up to, but not exceed the scope of practice under their prior active license; and

(c) Work under an assigned supervisor.

(3) A health care facility is not obligated to use any retired volunteer medical worker.

[Statutory Authority: RCW 18.130.050 and 18.130.360. 07-21-133, § 246-12-420, filed 10/23/07, effective 12/1/07.]

WAC 246-12-430 How to renew your retired volunteer medical worker license. (1) To renew a retired volunteer medical worker license, you must:

(a) Submit a written declaration stating you have met the continuing competency requirements defined in WAC 246-12-440; and

(b) Submit proof of current registration as a volunteer with a local organization for emergency services or management.

(2) There is no renewal fee.

(3) A retired volunteer medical worker license must be renewed every three years.

(4) Prior to the expiration date, courtesy renewal notices are mailed to the address on file. Practitioners should return the renewal notice when renewing their license. Failure to receive a courtesy renewal notice does not relieve or exempt the retired volunteer medical worker license renewal requirement.

[Statutory Authority: RCW 18.130.050 and 18.130.360. 07-21-133, § 246-12-430, filed 10/23/07, effective 12/1/07.]

WAC 246-12-440 Continuing competency. (1) A retired volunteer medical worker must complete the following requirements every three years to renew their license:

(a) Basic first-aid course;

(b) Bloodborne pathogens course; and

(c) CPR course.

(2) A retired volunteer medical worker must submit a signed declaration to verify they meet the continuing competency education requirements.

(3) Local organizations for emergency services or management that register retired volunteer medical workers may require additional training, such as incident command system (ICS) or national incident management system (NIMS).

[Statutory Authority: RCW 18.130.050 and 18.130.360. 07-21-133, § 246-12-440, filed 10/23/07, effective 12/1/07.]

WAC 246-12-450 How to return to active status. A licensed retired volunteer medical worker may return to active status as provided in WAC 246-12-040.

[Statutory Authority: RCW 18.130.050 and 18.130.360. 07-21-133, § 246-12-450, filed 10/23/07, effective 12/1/07.]

Chapter 246-14 WAC
UNIFORM PROCEDURES FOR COMPLAINT RESOLUTION

WAC

246-14-010	Intent.
246-14-020	Definitions.
246-14-030	What happens if a time period expires?
246-14-040	Initial assessment of reports.
246-14-050	Investigation of complaints.
246-14-060	Case disposition.
246-14-090	Adjudication of statement of charges.
246-14-100	Resolution of a statement of allegations.
246-14-110	What happens if a case returns to a prior stage?
246-14-120	Notice of applicable time periods.

DISPOSITION OF SECTIONS FORMERLY CODIFIED IN THIS CHAPTER

246-14-070 Limited extensions of basic time periods. [Statutory Authority: RCW 18.130.095(1). 00-10-114, § 246-14-070, filed 5/3/00, effective 7/2/00.] Repealed by 07-24-

073, filed 12/4/07, effective 1/4/08. Statutory Authority: RCW 18.130.095.

246-14-080 Extension with management oversight. [Statutory Authority: RCW 18.130.095(1). 00-10-114, § 246-14-080, filed 5/3/00, effective 7/2/00.] Repealed by 07-24-073, filed 12/4/07, effective 1/4/08. Statutory Authority: RCW 18.130.095.

WAC 246-14-010 Intent. These rules establish basic time periods for processing and resolving complaints against credentialed health care providers and applicants. The rules also provide enforcement mechanisms to ensure timely disposition of complaints and adjudicative proceedings. The department of health does not anticipate that the basic time period will be used in all cases. These rules are adopted as required by RCW 18.130.095(1). The intent is to promote timely protection of the public and fairness to credential holders, applicants, and complainants, without sacrificing public safety.

[Statutory Authority: RCW 18.130.095. 07-24-073, § 246-14-010, filed 12/4/07, effective 1/4/08. Statutory Authority: RCW 18.130.095(1). 00-10-114, § 246-14-010, filed 5/3/00, effective 7/2/00.]

WAC 246-14-020 Definitions. (1) A "report" is information received by the department of health which raises concern about conduct, acts or conditions related to a credential holder or applicant or about the credential holder or applicant's ability to practice with reasonable skill and safety. If the disciplining authority determines a report warrants an investigation, the report becomes a "complaint."

(2) "Days" are calendar days unless otherwise indicated. If a time period would end on a Saturday, Sunday, or state holiday, that time period will end on the next business day.

(3) "Enhanced management oversight" is enhanced direction of a case imposed by department management as an enforcement mechanism when a basic time period is exceeded. Management will ensure the case moves through the stage promptly. Some examples of enhanced direction may be staffing changes, resource reallocation, and work planning.

[Statutory Authority: RCW 18.130.095. 08-20-121, § 246-14-020, filed 9/30/08, effective 10/31/08; 07-24-073, § 246-14-020, filed 12/4/07, effective 1/4/08. Statutory Authority: RCW 18.130.095(1). 00-10-114, § 246-14-020, filed 5/3/00, effective 7/2/00.]

WAC 246-14-030 What happens if a time period expires? When a basic time period expires, enhanced management oversight will occur. The reason for the delay will be noted in the tracking system, but work on the case will not be interrupted.

[Statutory Authority: RCW 18.130.095. 07-24-073, § 246-14-030, filed 12/4/07, effective 1/4/08. Statutory Authority: RCW 18.130.095(1). 00-10-114, § 246-14-030, filed 5/3/00, effective 7/2/00.]

WAC 246-14-040 Initial assessment of reports. (1) Initial assessment is the process of determining whether a report warrants an investigation and becomes a complaint. The complainant and credential holder or applicant will be notified as soon as possible after the initial assessment is complete.

(2) The basic time period for initial assessment is twenty-one days.

(3) All reports will be reviewed for imminent danger within two working days. If imminent danger is identified, the report will be immediately forwarded for processing.

[Statutory Authority: RCW 18.130.095(1). 00-10-114, § 246-14-040, filed 5/3/00, effective 7/2/00.]

WAC 246-14-050 Investigation of complaints. (1) Investigation is the process of gathering information which examines the complaint and the situation surrounding the complaint.

(2) The basic time period for investigation is one hundred seventy days.

[Statutory Authority: RCW 18.130.095(1). 00-10-114, § 246-14-050, filed 5/3/00, effective 7/2/00.]

WAC 246-14-060 Case disposition. (1) Case disposition is the process of deciding whether to issue a statement of charges on a complaint, to take informal action, or to close the complaint without action. It includes the processes necessary to implement the decision.

(2) The basic time period for case disposition is one hundred forty days.

(3) If a complaint returns to the case disposition stage because a stipulation to informal disposition has been rejected, there is a new basic period of sixty days.

[Statutory Authority: RCW 18.130.095(1). 00-10-114, § 246-14-060, filed 5/3/00, effective 7/2/00.]

WAC 246-14-090 Adjudication of statement of charges. (1) Procedures for adjudication of statements of charges are contained in chapters 246-10 and 246-11 WAC. Those rules provide for twenty days to file an answer, with a sixty-day extension for good cause, and thirty days to issue a scheduling order. They also provide for continuances.

(2) The basic time period for settlement, discovery, and commencement of hearing is one hundred eighty days or less, to be set in the scheduling order.

(3) The basic time period for issuing an order is forty-five days. For secretary professions, the forty-five day period begins upon completion of the hearing. For boards and commission professions, the forty-five day period begins upon completion of the hearing and deliberations.

(4) If no answer is filed or default occurs during the adjudication, a proposed final order of default will be submitted to the disciplining authority within sixty days of notice of failure to respond or notice of default. A final order will be issued within forty-five days of the submission.

[Statutory Authority: RCW 18.130.095. 07-24-073, § 246-14-090, filed 12/4/07, effective 1/4/08. Statutory Authority: RCW 18.130.095(1). 00-10-114, § 246-14-090, filed 5/3/00, effective 7/2/00.]

WAC 246-14-100 Resolution of a statement of allegations. (1) If a statement of allegations is issued, the respondent will have twenty-eight days to make an initial response. If no response is made, the program's attorney may determine informal disposition has been rejected. The case will be returned to case disposition.

(2) If a response is made, the basic period for completion of informal resolution is sixty days. If informal resolution has not been reached within that time, the case will return to case disposition to determine appropriate action.

[Statutory Authority: RCW 18.130.095. 07-24-073, § 246-14-100, filed 12/4/07, effective 1/4/08. Statutory Authority: RCW 18.130.095(1). 00-10-114, § 246-14-100, filed 5/3/00, effective 7/2/00.]

WAC 246-14-110 What happens if a case returns to a prior stage? If a case returns to a prior stage, any unused basic time period days in the prior stage may be used.

[Statutory Authority: RCW 18.130.095. 07-24-073, § 246-14-110, filed 12/4/07, effective 1/4/08. Statutory Authority: RCW 18.130.095(1). 00-10-114, § 246-14-110, filed 5/3/00, effective 7/2/00.]

WAC 246-14-120 Notice of applicable time periods. (1) Affected credential holders, applicants, and complainants will be notified of applicable time periods as soon as possible consistent with effective case management.

(2) Other information about applicable time periods will be released according to public records law.

[Statutory Authority: RCW 18.130.095. 07-24-073, § 246-14-120, filed 12/4/07, effective 1/4/08. Statutory Authority: RCW 18.130.095(1). 00-10-114, § 246-14-120, filed 5/3/00, effective 7/2/00.]

Chapter 246-15 WAC
WHISTLEBLOWER COMPLAINTS IN HEALTH CARE SETTINGS

WAC

246-15-001	Purpose and scope.
246-15-010	Definitions.
246-15-020	Rights and responsibilities—Whistleblower and department.
246-15-030	Procedures for filing, investigation, and resolution of whistleblower complaints.

WAC 246-15-001 Purpose and scope. Regulations for whistleblower protection are hereby adopted pursuant to RCW 43.70.075. The purpose of these regulations is to protect the identity of persons who communicate in good faith to the department alleging the improper quality of care by a health care facility or provider as defined in this chapter, and set forth the process the department will use in receiving, investigating and resolving complaints.

[Statutory Authority: RCW 43.70.075 and 43.70.040. 97-02-013, § 246-15-001, filed 12/20/96, effective 1/20/97.]

WAC 246-15-010 Definitions. The words and phrases in this chapter have the following meanings unless the context clearly indicates otherwise.

(1) "Consumer" means:

(a) An individual receiving health care or services from a health care facility or health care professional;

(b) A person pursuant to RCW 7.70.065 authorized to provide informed consent to health care on behalf of (a) of this subsection who is not competent to consent.

(2) "Department" means the Washington state department of health.

(3) "Employee" means an individual employed by a health care facility or health care professional at the time the:

(a) Alleged improper quality of care occurred; or

(b) Alleged improper quality of care is discovered.

(4) "Good faith" means an honest and reasonable belief in the truth of the allegation.

(5) "Health care" means any care, service, or procedure provided by a health care facility or a health care provider:

(a) To diagnose, treat, or maintain a patient's physical or mental condition; or

(b) That affects the structure or function of the human body.

(6) "Health care facility" includes the following:

(a) Adult residential rehabilitation centers regulated pursuant to chapter 71.12 RCW;

(b) Alcoholism treatment facilities regulated pursuant to chapter 71.12 RCW;

(c) Alcoholism hospitals regulated pursuant to chapter 71.12 RCW;

(d) Ambulance and aid services regulated pursuant to chapter 18.73 RCW;

(e) Boarding homes regulated pursuant to chapter 18.20 RCW;

(f) Childbirth centers regulated pursuant to chapter 18.46 RCW;

(g) Home care agencies regulated pursuant to chapter 70.127 RCW;

(h) Home health agencies regulated pursuant to chapter 70.127 RCW;

(i) Hospice agencies regulated pursuant to chapter 70.127 RCW;

(j) Hospitals regulated pursuant to chapter 70.41 RCW;

(k) Pharmacies regulated pursuant to chapter 18.64 RCW;

(l) Private psychiatric hospitals regulated pursuant to chapter 71.12 RCW;

(m) Residential treatment facilities for psychiatrically impaired children and youth regulated pursuant to chapter 71.12 RCW;

(n) Rural health care facilities regulated pursuant to chapter 70.175 RCW.

(7) "Health care provider," "health care professional," "professional" or "provider" mean a person who is licensed, certified, registered or otherwise authorized by the law of this state to provide health care in the ordinary course of business or practice of a profession.

(8) "Improper quality of care," as defined in RCW 43.70.075, means any practice, procedure, action, or failure to act that violates any state law or rule of the applicable state health licensing authority under Title 18 RCW or chapters 70.41, 70.96A, 70.127, 70.175, 71.05, 71.12, and 71.24 RCW, and enforced by the department of health. Improper quality of care shall not include good faith personnel actions related to employee performance or actions taken according to established terms and conditions of employment. Good faith personnel action will not prevent investigations of alleged improper quality of care.

(9) "Whistleblower" means a consumer, employee, or health care professional who in good faith reports alleged quality of care concerns to the department of health.

[Statutory Authority: RCW 43.70.075 and 43.70.040. 97-02-013, § 246-15-010, filed 12/20/96, effective 1/20/97.]

WAC 246-15-020 Rights and responsibilities—Whistleblower and department. (1) A person who in good faith communicates a complaint or information as defined in this chapter as provided in RCW 43.70.075 is:

(a) Immune from civil liability on claims based upon that communication to the department under RCW 4.24.510;

(b) Entitled to recover costs and reasonable attorneys' fees incurred in establishing a defense under RCW 4.24.510 if prevailing upon the defense; and

(c) Afforded the protections and remedies of the human rights commission pursuant to chapter 49.60 RCW. The department will refer whistleblowers expressing concern about reprisal or retaliatory action to the human rights commission.

(2) The department will protect the identity of the whistleblower by revealing it only:

(a) To appropriate department staff or disciplining authority member;

(b) By court order; or

(c) If the complaint is not in good faith.

[Statutory Authority: RCW 43.70.075 and 43.70.040. 97-02-013, § 246-15-020, filed 12/20/96, effective 1/20/97.]

WAC 246-15-030 Procedures for filing, investigation, and resolution of whistleblower complaints. In filing, investigating and resolving a whistleblower complaint, the department will follow its usual procedures for complaint processing while protecting a whistleblower's identity consistent with WAC 246-15-020.

(1) Filing.

(a) Upon receipt of a complaint from a whistleblower alleging improper quality of care, department staff will enter the complaint into the tracking system for complaints against health care providers or facilities and create a file on that complaint.

(b) Staff will affix a permanent cover to the letter of complaint, or other form of notice, in the complaint file, noting the statutory citation for protection of identity of the complainant.

(c) Staff will assess priority of the case and conduct the initial case planning based on the complainant information.

(2) Investigation.

(a) For cases assigned to an investigation, staff will develop an investigative plan. The investigator will gather pertinent information and perform other functions as appropriate to the allegation. The investigator may interview witnesses or others with information relevant to the investigation, review records and consult with staff of other agencies.

(b) At the conclusion of the investigation, the investigator will prepare the necessary documents, such as an investigative report summarizing the findings, and other documents necessary for the department to take further action.

(3) Resolution. The regulatory authority for the health facility or provider will:

(a) Review investigative findings to determine violation of any statutes or rules;

(b) Take appropriate disciplinary action as necessary;

(c) Ensure upon case closure, that the permanent cover affixed in subsection (1)(c) of this section will remain;

(d) Will code or obliterate references to the whistleblower complainant in investigative materials or in the investigative report as necessary to protect the whistleblower's identity prior to any public disclosure; and

(e) Make the case file available to the public upon case closure, subject to public disclosure and other relevant laws.

[Statutory Authority: RCW 43.70.075 and 43.70.040. 97-02-013, § 246-15-030, filed 12/20/96, effective 1/20/97.]

Chapter 246-16 WAC
STANDARDS OF PROFESSIONAL CONDUCT

WAC

246-16-010 Purpose of chapter.
246-16-020 Definitions.

SEXUAL MISCONDUCT

246-16-100 Sexual misconduct.

MANDATORY REPORTING

246-16-200 Mandatory reporting—Intent.
246-16-210 Mandatory reporting—Definitions.
246-16-220 Mandatory reporting—How and when to report.
246-16-230 Mandatory reporting—License holder self reports.
246-16-235 Mandatory reporting—License holder reporting other license holders.
246-16-240 Mandatory reporting—Reports by professional liability insurance carriers.
246-16-245 Mandatory reporting—Reports by health care institutions.
246-16-250 Mandatory reporting—Reports by health service contractors and disability insurers.
246-16-255 Mandatory reporting—Reports by professional review organizations.
246-16-260 Mandatory reporting—Reports by courts.
246-16-265 Mandatory reporting—Reports by state and federal agencies.

WAC 246-16-010 Purpose of chapter. The rules in this chapter define certain acts of unprofessional conduct for health care providers under the jurisdiction of the secretary of the department of health as provided in RCW 18.130.040 (2)(a) including persons licensed or certified by the secretary under chapter 18.73 RCW or RCW 18.71.205. The rules also provide for sanctions. The secretary may adopt rules applicable to specific professions under RCW 18.130.040(2). These rules also serve as model rules for the disciplining authorities listed in RCW 18.130.040 (2)(b).

[Statutory Authority: RCW 18.130.050 (1), (12) and 18.130.180. 06-18-045, § 246-16-010, filed 8/30/06, effective 9/30/06.]

WAC 246-16-020 Definitions. (1) "Health care information" means any information, whether oral or recorded in any form or medium that identifies or can readily be associated with the identity of, and relates to the health care of, a patient or client.

(2) "Health care provider" means an individual applying for a credential or credentialed in a profession listed in RCW 18.130.040 (2)(a).

(3) "Key party" means immediate family members and others who would be reasonably expected to play a significant role in the health care decisions of the patient or client and includes, but is not limited to, the spouse, domestic partner, sibling, parent, child, guardian and person authorized to make health care decisions of the patient or client.

(4) "Legitimate health care purpose" means activities for examination, diagnosis, treatment, and personal care of patients or clients, including palliative care, as consistent with community standards of practice for the profession. The activity must be within the scope of practice of the health care provider.

(5) "Patient" or "client" means an individual who receives health care from a health care provider.

[Statutory Authority: RCW 18.130.050 (1), (12) and 18.130.180. 06-18-045, § 246-16-020, filed 8/30/06, effective 9/30/06.]

SEXUAL MISCONDUCT

WAC 246-16-100 Sexual misconduct. (1) A health care provider shall not engage, or attempt to engage, in sexual misconduct with a current patient, client, or key party, inside or outside the health care setting. Sexual misconduct shall constitute grounds for disciplinary action. Sexual misconduct includes but is not limited to:

(a) Sexual intercourse;

(b) Touching the breasts, genitals, anus or any sexualized body part except as consistent with accepted community standards of practice for examination, diagnosis and treatment and within the health care practitioner's scope of practice;

(c) Rubbing against a patient or client or key party for sexual gratification;

(d) Kissing;

(e) Hugging, touching, fondling or caressing of a romantic or sexual nature;

(f) Examination of or touching genitals without using gloves;

(g) Not allowing a patient or client privacy to dress or undress except as may be necessary in emergencies or custodial situations;

(h) Not providing the patient or client a gown or draping except as may be necessary in emergencies;

(i) Dressing or undressing in the presence of the patient, client or key party;

(j) Removing patient or client's clothing or gown or draping without consent, emergent medical necessity or being in a custodial setting;

(k) Encouraging masturbation or other sex act in the presence of the health care provider;

(l) Masturbation or other sex act by the health care provider in the presence of the patient, client or key party;

(m) Suggesting or discussing the possibility of a dating, sexual or romantic relationship after the professional relationship ends;

(n) Terminating a professional relationship for the purpose of dating or pursuing a romantic or sexual relationship;

(o) Soliciting a date with a patient, client or key party;

(p) Discussing the sexual history, preferences or fantasies of the health care provider;

(q) Any behavior, gestures, or expressions that may reasonably be interpreted as seductive or sexual;

(r) Making statements regarding the patient, client or key party's body, appearance, sexual history, or sexual orientation other than for legitimate health care purposes;

(s) Sexually demeaning behavior including any verbal or physical contact which may reasonably be interpreted as demeaning, humiliating, embarrassing, threatening or harming a patient, client or key party;

(t) Photographing or filming the body or any body part or pose of a patient, client, or key party, other than for legitimate health care purposes; and

(u) Showing a patient, client or key party sexually explicit photographs, other than for legitimate health care purposes.

(2) A health care provider shall not:

(a) Offer to provide health care services in exchange for sexual favors;

(b) Use health care information to contact the patient, client or key party for the purpose of engaging in sexual misconduct;

(c) Use health care information or access to health care information to meet or attempt to meet the health care provider's sexual needs.

(3) A health care provider shall not engage, or attempt to engage, in the activities listed in subsection (1) of this section with a former patient, client or key party within two years after the provider-patient/client relationship ends.

(4) After the two-year period of time described in subsection (3) of this section, a health care provider shall not engage, or attempt to engage, in the activities listed in subsection (1) of this section if:

(a) There is a significant likelihood that the patient, client or key party will seek or require additional services from the health care provider; or

(b) There is an imbalance of power, influence, opportunity and/or special knowledge of the professional relationship.

(5) When evaluating whether a health care provider is prohibited from engaging, or attempting to engage, in sexual misconduct, the secretary will consider factors, including but not limited to:

(a) Documentation of a formal termination and the circumstances of termination of the provider-patient relationship;

(b) Transfer of care to another health care provider;

(c) Duration of the provider-patient relationship;

(d) Amount of time that has passed since the last health care services to the patient or client;

(e) Communication between the health care provider and the patient or client between the last health care services rendered and commencement of the personal relationship;

(f) Extent to which the patient's or client's personal or private information was shared with the health care provider;

(g) Nature of the patient or client's health condition during and since the professional relationship;

(h) The patient or client's emotional dependence and vulnerability; and

(i) Normal revisit cycle for the profession and service.

(6) Patient, client or key party initiation or consent does not excuse or negate the health care provider's responsibility.

(7) These rules do not prohibit:

(a) Providing health care services in case of emergency where the services cannot or will not be provided by another health care provider;

(b) Contact that is necessary for a legitimate health care purpose and that meets the standard of care appropriate to that profession; or

(c) Providing health care services for a legitimate health care purpose to a person who is in a preexisting, established personal relationship with the health care provider where there is no evidence of, or potential for, exploiting the patient or client.

[Statutory Authority: RCW 18.130.050 (1), (12) and 18.130.180. 06-18-045, § 246-16-100, filed 8/30/06, effective 9/30/06.]

MANDATORY REPORTING

WAC 246-16-200 Mandatory reporting—Intent. These mandatory reporting rules require certain reports about license holders and are intended to address patient safety. These rules are not intended to limit reports from any person who has a concern about a license holder's conduct or ability to practice safely.

[Statutory Authority: RCW 18.130.070 and 18.130.060. 08-08-066, § 246-16-200, filed 3/31/08, effective 5/1/08.]

WAC 246-16-210 Mandatory reporting—Definitions. (1) "Approved impaired practitioner or voluntary substance abuse program" means a program authorized by RCW 18.130.175 and approved by a disciplining authority listed in RCW 18.130.040.

(2) "Conviction" means a court has decided a person is guilty of any gross misdemeanor or felony. It includes any guilty or no contest plea and all decisions with a deferred or suspended sentence.

(3) "Determination or finding" means a final decision by an entity required or requested to report under this chapter. This applies even if no adverse action or sanction has been imposed or if the license holder is appealing the decision.

(4) "License holder" means a person holding a credential in a profession regulated by a disciplining authority listed in RCW 18.130.040(2).

(5) "Unable to practice with reasonable skill and safety due to a mental or physical condition" means a license holder who:

(a) A court has declared to be incompetent or mentally ill; or

(b) Is not successfully managing a mental or physical condition and as a result poses a risk to patient safety.

(6) "Unprofessional conduct" means the acts, conduct, or conditions described in RCW 18.130.180.

[Statutory Authority: RCW 18.130.070 and 18.130.060. 08-08-066, § 246-16-210, filed 3/31/08, effective 5/1/08.]

WAC 246-16-220 Mandatory reporting—How and when to report. (1) Reports are submitted to the department of health. The department will give the report to the appropriate disciplining authority for review, possible investigation, and further action.

(a) When a patient has been harmed, a report to the department is required. A report to one of the approved impaired practitioner or voluntary substance abuse programs is not a substitute for reporting to the department.

(b) When there is no patient harm, reports of inability to practice with reasonable skill and safety due to a mental or physical condition may be submitted to one of the approved impaired practitioner or voluntary substance abuse programs or to the department. Reports of unprofessional conduct are submitted to the department.

(c) Reports to a national practitioner data bank do not meet the requirement of this section.

(2) The report must include enough information to enable the disciplining authority to assess the report. If these details are known, the report should include:

(a) The name, address, and telephone number of the person making the report.

(b) The name, address, and telephone number(s) of the license holder being reported.

(c) Identification of any patient or client who was harmed or placed at risk.

(d) A brief description or summary of the facts that caused the report, including dates.

(e) If court action is involved, the name of the court, the date of filing, and the docket number.

(f) Any other information that helps explain the situation.

(3) Reports must be submitted no later than thirty calendar days after the reporting person has actual knowledge of the information that must be reported.

[Statutory Authority: RCW 18.130.070 and 18.130.060. 08-08-066, § 246-16-220, filed 3/31/08, effective 5/1/08.]

WAC 246-16-230 Mandatory reporting—License holder self reports. Each license holder must self report:

(1) Any conviction, determination, or finding that he or she has committed unprofessional conduct; or

(2) Information that he or she is unable to practice with reasonable skill and safety due to a mental or physical condition; or

(3) Any disqualification from participation in the federal medicare or medicaid program.

[Statutory Authority: RCW 18.130.070 and 18.130.060. 08-08-066, § 246-16-230, filed 3/31/08, effective 5/1/08.]

WAC 246-16-235 Mandatory reporting—License holder reporting other license holders. A license holder must report another license holder in some circumstances.

(1) The reporting license holder must submit a report when he or she has actual knowledge of:

(a) Any conviction, determination, or finding that another license holder has committed an act that constitutes unprofessional conduct; or

(b) That another license holder may not be able to practice his or her profession with reasonable skill and safety due to a mental or physical condition.

(2) The license holder does not have to report when he or she is:

(a) A member of a professional review organization as provided in WAC 246-16-255;

(b) Providing health care to the other license holder and the other license holder does not pose a clear and present danger to patients or clients; or

(c) Part of a federally funded substance abuse program or approved impaired practitioner or voluntary substance abuse program and the other license holder is participating in treatment and does not pose a clear and present danger to patients or clients.

[Statutory Authority: RCW 18.130.070 and 18.130.060. 08-08-066, § 246-16-235, filed 3/31/08, effective 5/1/08.]

WAC 246-16-240 Mandatory reporting—Reports by professional liability insurance carriers. Every institution, corporation or organization providing professional liability insurance to a license holder must report:

(1) Any malpractice settlement, award, or payment in excess of twenty thousand dollars that results from a claim or action for damages allegedly caused by a license holder's incompetence or negligence in the practice of the profession.

(2) Award, settlement, or payment of three or more claims during a twelve-month period that result from claims or actions for damages allegedly caused by the license holder's incompetence or negligence in the practice of the profession.

(3) Reports made according to RCW 18.57.245 or 18.71.350 meet the requirement.

[Statutory Authority: RCW 18.130.070 and 18.130.060. 08-08-066, § 246-16-240, filed 3/31/08, effective 5/1/08.]

WAC 246-16-245 Mandatory reporting—Reports by health care institutions. (1) This section applies to:

(a) Hospitals and specialty hospital defined in chapter 70.41 RCW;

(b) Ambulatory surgery facilities defined in chapter 70.230 RCW;

(c) Childbirth centers defined in chapter 18.46 RCW;

(d) Nursing homes defined in chapter 18.51 RCW;

(e) Chemical dependency treatment programs defined in chapter 70.96A RCW;

(f) Drug treatment agencies defined in chapter 69.54 RCW; and

(g) Public and private mental health treatment agencies defined in RCW 71.05.020 and 71.24.025.

(2) The chief administrator or executive officer or designee of these institutions must report when:

(a) A license holder's services are terminated or restricted because a license holder has harmed or placed at unreasonable risk of harm a patient or client; or

(b) A license holder poses an unreasonable risk of harm to patients or clients due to a mental or physical condition.

(3) Reports made by a hospital according to RCW 70.41.210 meet the requirement.

(4) Commencing July 1, 2009, reports made by an ambulatory surgical center according to RCW 70.230.110 meet the requirement.

[Statutory Authority: RCW 18.130.070 and 18.130.060. 08-08-066, § 246-16-245, filed 3/31/08, effective 5/1/08.]

WAC 246-16-250 Mandatory reporting—Reports by health service contractors and disability insurers. The executive officer of health care service contractors and disability insurers licensed under chapters 48.20, 48.21, 48.21A, and 48.44 RCW must report when the entity has made a determination or finding that a license holder has engaged in billing fraud.

[Statutory Authority: RCW 18.130.070 and 18.130.060. 08-08-066, § 246-16-250, filed 3/31/08, effective 5/1/08.]

WAC 246-16-255 Mandatory reporting—Reports by professional review organizations. (1) This section applies to every peer review committee, quality improvement committee, or other similarly designated professional review organization operating in the state of Washington.

(2) Unless prohibited by state or federal law, the professional review organization must report:

(a) When it makes a determination or finding that a license holder has caused harm to a patient or placed a patient at unreasonable risk of harm; and

(b) When it has actual knowledge that the license holder poses an unreasonable risk of harm due to a mental or physical condition.

(3) Professional review organizations and individual license holders participating in a professional review organization do not need to report during the investigative phase of the professional review organization's operation if the organization completes the investigation in a timely manner.

[Statutory Authority: RCW 18.130.070 and 18.130.060. 08-08-066, § 246-16-255, filed 3/31/08, effective 5/1/08.]

WAC 246-16-260 Mandatory reporting—Reports by courts. The department requests that the clerks of trial courts in Washington report professional malpractice judgments and all convictions against a license holder.

[Statutory Authority: RCW 18.130.070 and 18.130.060. 08-08-066, § 246-16-260, filed 3/31/08, effective 5/1/08.]

WAC 246-16-265 Mandatory reporting—Reports by state and federal agencies. The department requests that any state or federal program employing a license holder in Washington reports:

(1) When it determines a license holder has harmed or placed at unreasonable risk of harm a patient or client; and

(2) When it has actual knowledge that the license holder poses an unreasonable risk of harm due to a mental or physical condition.

[Statutory Authority: RCW 18.130.070 and 18.130.060. 08-08-066, § 246-16-265, filed 3/31/08, effective 5/1/08.]

Chapter 246-25 WAC

ANTITRUST IMMUNITY AND COMPETITIVE OVERSIGHT

(Formerly chapter 245-02 WAC)

WAC

SUBSTANTIVE RULES

246-25-010	Definitions.
246-25-020	General policy statement—Antitrust immunity and competitive oversight.
246-25-025	Scope and applicability.
246-25-030	Cooperative activities—Policy statement.
246-25-035	Consumer access to local health services in rural areas.
246-25-040	Collective negotiations—Policy statement—Permitted negotiations—Petitions.
246-25-045	"Most favored nations clauses"—Policy statement.
246-25-050	Exclusive dealing clauses—Policy statement.

PROCEDURAL RULES

246-25-100	Purpose.
246-25-110	Form of petition and request for informal opinion.
246-25-115	Contents of requests for informal opinions and written petitions.
246-25-120	Continuing oversight and reporting requirements.
246-25-125	Additional information.
246-25-130	Submission of information.
246-25-131	Public notice and comment.
246-25-135	Commission to provide copy of informal opinion to applicant.
246-25-140	Attorney general to provide informal opinion and advice on petitions to the commission.
246-25-145	Applicant may request an adjudicative proceeding or file a petition.
246-25-150	Decision not to conduct an adjudication.

246-25-155 Adjudicative proceeding—Rules of procedure.
246-25-160 Adjudicative proceedings—Notice of hearing.
246-25-165 Presiding officer.
246-25-170 Commission to retain jurisdiction.
246-25-175 Adjudicative proceedings—Reconsideration.
246-25-180 Notice of modification or withdrawal of authorization.

SUBSTANTIVE RULES

WAC 246-25-010 Definitions. Unless the context requires otherwise, the definitions contained in this section apply throughout this chapter.

(1) **"Attorney general"** means the antitrust section of the office of the attorney general.

(2) **"Applicant"** means a certified health plan, health care facility, health care provider, or other person involved in the development, delivery, or marketing of health services or certified health plans.

(3) **"Parties"** means the natural persons, corporations, or associations involved in the plan or activity which is the subject of the proposal being reviewed.

(4) **"Petition"** means the document that shall be filed with the commission pursuant to RCW 43.72.310(3) by an applicant in order to request approval of conduct that could tend to lessen competition in the relevant market.

(5) **"Proposal"** means the plan or activity that is being reviewed.

(6) **"Request for informal opinion"** means the document that may be filed with the commission pursuant to RCW 43.72.310(1) by an applicant.

(7) **"Exclusive dealing clause"** means a clause in a contract between a certified health plan and a health care provider or facility by which the provider or facility agree not to provide services to another certified health plan.

(8) **"Health care network"** means a group of providers or facilities controlled by the providers, facilities or intermediary organizations including, but not limited to, physician-hospital organizations and independent practice associations.

(9) **"Most favored nations clause"** means terms in a contract between a certified health plan and a health care provider or facility by which the provider or facility agrees they will not charge other plans a lower price than the price charged the plan instituting the clause.

(10) **"Rural area"** means a geographical area outside the boundaries of Metropolitan Statistical Areas (MSAs) or an area within an MSA, but more than thirty minutes average travel time from an urban area of at least ten thousand population.

[Statutory Authority: RCW 43.72.310. 99-04-049, recodified as § 246-25-010, filed 1/28/99, effective 1/28/99; 95-04-115, § 245-02-010, filed 2/1/95, effective 10/1/95.]

WAC 246-25-020 General policy statement—Antitrust immunity and competitive oversight. (1) The purpose of WAC 245-02-020 through 245-02-050 is to implement provisions of the act that require the commission to adopt rules governing antitrust immunity, competitive oversight, and conduct of certified health plans, health care providers, and health care facilities. The provisions of these rules shall be strictly construed. Whenever there is doubt as to the meaning of these rules or as to their applicability to particular conduct or circumstances, these rules shall be interpreted in a manner consistent with existing antitrust law principles of this state and of the federal government, including final orders of the Federal Trade Commission and final decisions of the federal courts interpreting the various federal antitrust statutes.

(2) Unless explicitly permitted under this chapter or pursuant to a petition approved in accordance with the provisions of RCW 43.72.310 (3) and (4), nothing in these rules shall be deemed or interpreted to permit activities or to grant immunity for those activities prohibited under RCW 43.72.-300(3) or any other activity which would constitute a per se violation of state or federal antitrust laws.

[Statutory Authority: RCW 43.72.310. 99-04-049, recodified as § 246-25-020, filed 1/28/99, effective 1/28/99; 95-04-115, § 245-02-020, filed 2/1/95, effective 10/1/95.]

WAC 246-25-025 Scope and applicability. The provisions of WAC 245-02-010 through 245-02-050 shall govern contracts and conduct among health care providers, health care facilities, and certified health plans entered into or renewed on and after October 1, 1995.

[Statutory Authority: RCW 43.72.310. 99-04-049, recodified as § 246-25-025, filed 1/28/99, effective 1/28/99; 95-04-115, § 245-02-025, filed 2/1/95, effective 10/1/95.]

WAC 246-25-030 Cooperative activities—Policy statement. The commission recognizes that reforms in the health system will occur through the development of comprehensive, integrated, and cost-effective health services delivery systems. Because the health services market place is evolving in anticipation of changes required by the act, it would not be appropriate to establish with precision specific areas where cooperative activities are entitled to immunity from antitrust laws. Pursuant to RCW 34.05.023, the commission therefore adopts as an interim policy statement the *Statements of Enforcement Policy and Analytical Principles Relating to Health Care and Antitrust* issued by the U.S. Department of Justice and the Federal Trade Commission on September 27, 1994. These nine policy statements address: (1) Mergers among hospitals; (2) hospital joint ventures involving high-technology or other expensive health care equipment; (3) hospital joint ventures involving specialized clinical or other expensive health care services; (4) providers' collective provision of nonfee-related information to purchasers of health care services; (5) providers' collective provision of fee-related information to purchasers of health care services; (6) provider participation in exchanges of price and cost information; (7) joint purchasing arrangements among health care providers; (8) physician network joint ventures; and (9) analytical principles relating to multiprovider networks.

[Statutory Authority: RCW 43.72.310. 99-04-049, recodified as § 246-25-030, filed 1/28/99, effective 1/28/99; 95-04-115, § 245-02-030, filed 2/1/95, effective 10/1/95.]

WAC 246-25-035 Consumer access to local health services in rural areas. An applicant may petition the commission for approval of a managed health care finance and delivery system in a rural area that may violate existing antitrust law principles or provisions of WAC 245-02-040, 245-02-045 or 245-02-050 but is necessary to preserve local

access to regular and ongoing health services in a rural area. In addition to the requirements set forth in WAC 245-02-110, et seq., such petitions shall include information demonstrating that the proposed system: (a) Has been developed through a community-based process that takes into consideration the concerns of local residents, health care providers, public and private health care facilities, local community organizations, and appropriate state agency health planning organizations located in or with responsibility for health services in rural areas, (b) will achieve quality improvements and cost efficiencies over present health service capabilities in the rural area, (c) will result in local access to regular and ongoing services required under the uniform benefits package, (d) will combine health care service delivery and financing, and (e) will or will not have special community governance arrangements. Nothing contained in this section shall be deemed to relieve an applicant from meeting the requirements imposed by law for registration and certification of certified health plans.

[Statutory Authority: RCW 43.72.310. 99-04-049, recodified as § 246-25-035, filed 1/28/99, effective 1/28/99; 95-04-115, § 245-02-035, filed 2/1/95, effective 10/1/95.]

WAC 246-25-040 Collective negotiations—Policy statement—Permitted negotiations—Petitions. (1) The board finds that collective negotiation by competing health care providers of certain nonfee terms and conditions of contracts with health carriers may result in procompetitive effects in the absence of any express or implied threat of retaliatory collective action by health care providers. However, the board finds few or no procompetitive effects in permitting competing health care providers to collectively negotiate contract terms and conditions that include fees or prices for provider services. The potential anticompetitive harms arising from collective exchanges of fee or price information by competing providers and collective negotiation by competing providers of the fees to be paid providers by health carriers far outweigh any potential gains in simplifying provider and health carrier negotiations, any reduction in transaction costs, and any potential gains in cost-effective health care delivery systems. To the contrary, the board finds that collective negotiation of fees or other prices for services by competing health care providers creates the potential to thwart the cost containment goals of health care reform by enabling health care providers to resist health carrier and purchaser pressure to reduce or limit the increase in prices for health care services. Except as herein provided, nothing contained in this section shall authorize any person or entity to engage in activities that would constitute violations of state or federal antitrust laws.

(2) Competing health care providers within the service area of a health carrier may meet and communicate for the purposes of collectively negotiating the following terms and conditions of contracts with health carriers:

(a) Respective provider and health carrier liability for the treatment or lack of treatment of health carrier enrollees;

(b) Administrative procedures including methods and timing of provider payment for services;

(c) Dispute resolution procedures relating to disputes between health carriers and providers including disputes between providers and health carriers that originate from enrollees;

(d) Patient referral procedures;

(e) Formulation and application of reimbursement methodology, e.g., risk pools, capitation, and capitation between providers and hospitals, except as provided in section 3;

(f) Quality assurance programs;

(g) Health service utilization review procedures; and

(h) Carrier provider selection and termination criteria, or whether to engage in selective contracting.

Nothing herein shall be construed to allow a boycott.

(3) Competing health care providers shall not meet and communicate for the purposes of collectively negotiating the following terms and conditions of contracts with health carriers:

(a) The fees or prices for services, including those arrived at by applying any reimbursement methodology procedures;

(b) The conversion factor in a resource based relative value scale reimbursement methodology or similar methodologies;

(c) The amount of any discount on the price of services to be rendered by providers;

(d) The dollar amount of capitation or fixed payment for health services rendered by providers to health carrier enrollees; or

(e) The inclusion or alteration of terms and conditions to the extent they are the subject of government regulation prohibiting or requiring the particular term or condition in question; however, such restriction does not limit provider rights to collectively petition government for a change in such regulation.

(4) Competing health care providers' exercise of collective negotiation rights granted by this section shall conform to the following criteria:

(a) Providers shall communicate or negotiate with health carriers through a third party who is authorized by the providers;

(b) Each competing provider involved in the communication and negotiation with health carriers shall make an independent decision to accept or reject a specific offer from a health carrier;

(c) Health carriers communicating or negotiating with the providers' representative shall remain free to contract with or offer different contract terms and conditions to individual competing providers;

(d) The providers' representative shall not recommend to providers that providers accept or reject the health carrier offer; the representative may only deliver the offer to providers and communicate to providers an evaluation of the positive or negative aspects of the offer;

(e) The providers' representative shall not represent more than 30% of the market of practicing providers for the provision of services of a particular provider type or specialty in the service area or proposed service area of a health carrier with less than 5% of the market, as measured by 1) the number of covered lives as reported by the Insurance Commissioner, or 2) the actual number of consumers of prepaid comprehensive health services; and

(f) The providers' representative shall comply with the provisions of subsection (5) of this section.

(5) Any person or organization proposing to act or acting as a representative of providers for the purpose of exercising the authority granted under this section shall comply with the following requirements:

(a) Before engaging in any collective negotiation with health carriers on behalf of competing health care providers, the representative shall file with the board information identifying the representative, the representative's plan of operation, and the representative's procedures to ensure compliance with this section;

(b) Before engaging in any collective negotiations with health carriers on behalf of providers, the representative shall furnish for the board's approval, a brief report identifying the proposed subject matter of the negotiations or discussions with health carriers and the efficiencies expected to be achieved thereby.

Approval shall be withheld by the board if the proposed negotiations would exceed the authority granted under this section. The representative shall supplement the report to the board as new information becomes available that indicates that the subject matter of the negotiations with the health carrier has or will change;

(c) Within fourteen days of a health carrier decision declining negotiation, terminating negotiation, or failing to respond to a request for negotiation the representative shall report to the board the end of negotiations;

(d) Before reporting the results of negotiations with a health carrier and before giving providers an evaluation of any offer made by a health carrier, the representative shall furnish for the board's approval prior to dissemination to providers, a copy of all communications to be made to providers related to negotiations, discussions, and health carrier offers.

(6) With the advice of the attorney general, the board shall either approve or disapprove the activity as identified in the report within thirty days of filing. If disapproved, the board shall furnish a written explanation of any deficiencies along with a statement of specific remedial measures as to how such deficiencies could be corrected. A representative who fails to obtain the board's approval is deemed to act outside the authority granted under this section.

(7) Nothing contained in this section is intended to authorize competing providers to act in concert in response to a report issued by the providers' representative related to the representative's discussions or negotiations with health carriers. The representative of the providers shall advise providers of the provisions of this section and shall warn providers of the potential for legal action against providers who violate state or federal antitrust laws by exceeding the authority granted under this section.

[Statutory Authority: RCW 43.72.310. 99-04-049, recodified as § 246-25-040, filed 1/28/99, effective 1/28/99; 96-11-133, § 245-02-040, filed 5/22/96, effective 6/22/96; 95-04-115, § 245-02-040, filed 2/1/95, effective 10/1/95.]

WAC 246-25-045 "Most favored nations clauses"—Policy statement. "Most favored nations clauses" may discourage discounting by the affected seller, may facilitate oligopolistic pricing and deter entry by more efficient competitors. "Most favored nations clauses" are often used as a replacement for innovation or efficiency by large competitors and act as a disincentive for creativity by small competitors. The commission finds that the use of "most favored nations clauses" in contracts between a health care provider or facility and a certified health plan create the potential to thwart the cost containment goals of health care reform. For these reasons, the use of "most favored nations clauses" in contracts between a health care provider or facility and a certified health plan is prohibited.

[Statutory Authority: RCW 43.72.310. 99-04-049, recodified as § 246-25-045, filed 1/28/99, effective 1/28/99; 95-04-115, § 245-02-045, filed 2/1/95, effective 10/1/95.]

WAC 246-25-050 Exclusive dealing clauses—Policy statement. (1) Exclusive dealing clauses in health care provider and facility contracts with certified health plans may enhance the quality of health services, achieve economic efficiencies, or improve the cost-effective use of health services and equipment. Exclusive dealing clauses may also reduce competition among certified health plans, providers, and facilities when the clauses prevent other competitors from entering the relevant market, thereby increasing the probability of the creation of a monopoly in that market.

(2) A contract between a certified health plan and a health care facility or provider may not contain an exclusive dealing clause if the plan holds more than forty percent of the relevant market.

(3) A contract between a certified health plan and a health care facility or provider may contain an exclusive dealing clause if the plan holds twenty percent or less of the relevant market.

(4) A contract between a certified health plan and a health care facility or provider may contain an exclusive dealing clause if the plan holds between twenty and forty percent of the relevant market and the commission has explicitly permitted its use. To obtain such approval, a plan must request an informal opinion as to use of the clause in the particular circumstances or seek approval by written petition pursuant to the procedures set forth in WAC 245-02-110, et seq.

(5) A contract between a health care network and a health care facility or provider may not contain an exclusive dealing clause if the health care network holds more than forty percent of the relevant market.

(6) A contract between a health care network and a health care facility or provider may contain an exclusive dealing clause if the health care network holds twenty percent or less of the relevant market.

(7) A contract between a health care network and a health care facility or provider may contain an exclusive dealing clause if the network holds between twenty and forty percent of the relevant market and the commission has explicitly permitted its use. To obtain such approval, a network must request an informal opinion as to use of the clause in the particular circumstances or seek approval by written petition pursuant to the procedures set forth in WAC 245-02-110, et seq.

(8) The provisions of this section do not apply to contracts between a staff or group model health maintenance organization and its health care facilities or providers.

[Statutory Authority: RCW 43.72.310. 99-04-049, recodified as § 246-25-050, filed 1/28/99, effective 1/28/99; 95-04-115, § 245-02-050, filed 2/1/95, effective 10/1/95.]

PROCEDURAL RULES

WAC 246-25-100 Purpose. The purpose of WAC 245-02-110 through 245-02-175 is to implement RCW 43.72.310 by setting forth the form and procedure for: (1) Requests for informal opinions from the attorney general as to whether particular conduct is authorized by the act, and (2) written petitions to the commission requesting approval of conduct that could tend to lessen competition in a relevant market.

[Statutory Authority: RCW 43.72.310. 99-04-049, recodified as § 246-25-100, filed 1/28/99, effective 1/28/99; 95-04-112, § 245-02-100, filed 2/1/95, effective 3/4/95.]

WAC 246-25-110 Form of petition and request for informal opinion. A petition, request for informal opinion, or request for adjudicatory proceeding shall adhere generally to the following form:

(1) At the top of the page shall appear the wording "before the Washington Health Services Commission." On the left side of the page, below the foregoing, the following caption shall be set out "In the Matter of (name of applicant)." Opposite the foregoing caption shall appear the words "petition," or "request for informal opinion," or, "request for adjudicatory proceeding," whichever is applicable.

(2) The materials required by WAC 245-02-115 through 245-02-125 shall be attached to the foregoing.

(3) The petition or request shall be signed and dated by the entity named in the first paragraph, or by its attorney. The original and five copies shall be filed with the commission as described in WAC 245-02-130.

(4) Information required by this chapter may be submitted in hard copy or in machine readable form:

(a) If hard copy, documents shall be submitted and organized by request;

(b) If in machine readable form, the data should comply with specifications acceptable to the commission and attorney general, which will be provided upon request.

[Statutory Authority: RCW 43.72.310. 99-04-049, recodified as § 246-25-110, filed 1/28/99, effective 1/28/99; 95-04-112, § 245-02-110, filed 2/1/95, effective 3/4/95.]

WAC 246-25-115 Contents of requests for informal opinions and written petitions. The following information shall accompany any written petition or request for informal opinion submitted to the commission:

(1) **Identification of parties.** Identify all parties to the proposal, and their parent entities, and for each one state:

(a) The name(s) under which it is doing business, or proposes to do business, in Washington;

(b) Its business address(es);

(c) Its type of business organization (for example, corporation, sole proprietorship, partnership, or association);

(d) A brief description of the nature or type of business conducted at each of its business locations within the state of Washington; and

(e) The person to whom questions regarding the request or petition should be directed.

(2) **Nature and description of proposal.** State or describe:

(a) The nature and type of transaction (for example, joint venture, acquisition, or merger)

(b) The business(es) involved or affected;

(c) The products and services involved or affected;

(d) The scheduled timeline, including expected dates of any major events required to consummate the proposed activity;

(e) The geographic area(s) in which business will be conducted;

(f) Whether the same products or services as those listed in (c), above, are currently offered within thirty miles of the geographic area(s) identified in (e), above, and if so, by whom; and

(g) The extent to which the participants share substantial risk including, but not limited to: (1) The extent to which the venture agrees to provide services on a capitated basis, or (2) the extent to which the venture creates significant financial incentives for its participants as a group to achieve specified cost containment goals, such as withholding a substantial amount of compensation due to participants, with distribution of that amount to participants only if the cost containment goals are met.

(h) A general description of any anticipated impact of the proposal on competition, including but not limited to the description of the business(es) involved or affected, the effect upon the parties in their competition with each other, the changes in market share among certified plans, health care providers or health care facilities in the geographic product or service area, the presence and entry of new market participants sufficient to deter or counteract the anti-competitive effects of the proposed activity, and availability of arrangements less restrictive to competition that would achieve the same or similar benefits to the community in health care delivery.

(i) The exclusive or nonexclusive nature of the proposal including, but not limited to (1) the extent to which viable competing networks or plans with adequate provider participation currently exist in the market, (2) the extent to which providers in the proposed network actually participate in other networks or contract individually with health benefit plans, or other evidence of their willingness and incentives to do so, (3) the extent to which providers in the proposed network will earn substantial revenue outside the network, (4) the absence of any indication of significant departicipation from other networks in the market as a result of the proposed venture, and (5) the absence of any indications of coordination among the providers in the network regarding price or other competitively significant terms of participation in other networks or plans.

(3) **Simultaneous review.** Identify any other state or federal agency reviewing the proposal and state the date on which each review was requested.

(4) Identify the name and address of all employee organizations representing the applicant's employees.

(5) **Description of how conduct will meet the goals of health care reform.** Describe in narrative form how the proposal will:

(a) Enhance the quality, access and cost of health services to consumers;

(b) Gain cost efficiency in the provision of health services;

(c) Improve utilization of health services, facilities and equipment;

(d) Avoid duplication of health services resources;

(e) Facilitate the exchange of information relating to performance expectations;

(f) Develop comprehensive, integrated, and cost-effective health services delivery in the geographic, product or service area;

(g) Reduce competition among certified health plans, health care providers, or health care facilities;

(h) Have an impact on the quality, availability, or price of health services to consumers;

(i) Reduce the number of people employed or otherwise impact how employees deliver health care services; and

(j) Change or otherwise have an impact on employee to patient ratios and how this will affect the quality of health services available to consumers.

[Statutory Authority: RCW 43.72.310. 99-04-049, recodified as § 246-25-115, filed 1/28/99, effective 1/28/99; 95-04-112, § 245-02-115, filed 2/1/95, effective 3/4/95.]

WAC 246-25-120 Continuing oversight and reporting requirements. Written petitions and requests for informal opinions must include, in narrative form, a description of the nature of the continued supervision and oversight the parties' believe would be necessary and appropriate to ensure the proposal continues to be consistent with the petition or request and that its benefits continue to outweigh its disadvantages. The description shall include a recommendation for the form of annual or more frequent progress reports appropriate to the transaction and sufficient to allow the commission and attorney general to evaluate the continuing conduct.

[Statutory Authority: RCW 43.72.310. 99-04-049, recodified as § 246-25-120, filed 1/28/99, effective 1/28/99; 95-04-112, § 245-02-120, filed 2/1/95, effective 3/4/95.]

WAC 246-25-125 Additional information. An applicant shall submit additional relevant information it believes is sufficient to support its petition or request for an informal opinion. The commission or attorney general may require the submission of additional information as may be required to complete the analysis necessary to form an opinion or respond to a written petition. Depending on the size, scope and nature of the proposed transaction, the material may include some or all of the following:

(1) Contracts, agreements, correspondence, corporate minutes, memoranda, or other documents describing the proposal;

(2) Financial statements for the parties to the proposal for the most recent fiscal year;

(3) Documents filed with any other state or federal agency with respect to the proposal;

(4) Plans, studies, or reports prepared in anticipation of the proposal;

(5) The parties' and their parent organizations' articles of incorporation, bylaws, and documents sufficient to identify the names of the parties' board of directors, owners, and officers; and

(6) Advertisements, brochures, or other publications used for marketing the parties' products or services within the state of Washington during the last fiscal year.

If the proposal includes collaboration between parties, including but not limited to mergers or joint ventures, the commission or the attorney general may request some or all of the following additional information depending on the size, scope, and nature of the proposed transaction:

(1) Each participant's contribution of capital, equipment, or other value to the transaction;

(2) Each participant's ownership interest and its expected consideration or return from the proposal;

(3) Each participant's nonmonetary involvement in the arrangement;

(4) The market share of each participant in the proposed collaborative effort, for each of the products sold by that participant, identifying the relevant geographic market; and

(5) A statement describing whether arrangements less restrictive to competition would achieve the same or similar benefits as those described in response to section (4) above.

If the proposal is for the merger of acute care inpatient hospitals, the commission or the attorney general may request some or all of the following additional information for the three years prior to the proposed merger, depending on the size, scope, or nature of the proposed merger:

(1) Data reported to the Comprehensive Hospital Abstract Reporting System (CHARS), in computerized form if possible;

(2) Copies of the parties' responses to the American Hospital Association's Annual Hospital Survey;

(3) The identities of the ten largest purchasers of hospital services for each hospital; and

(4) The average number of licensed, staffed, and occupied beds for each year.

[Statutory Authority: RCW 43.72.310. 99-04-049, recodified as § 246-25-125, filed 1/28/99, effective 1/28/99; 95-04-112, § 245-02-125, filed 2/1/95, effective 3/4/95.]

WAC 246-25-130 Submission of information. (1) The applicant requesting an informal opinion or submitting a written petition shall direct the request or written petition to the Chair of the Commission at the Washington Health Services Commission, P.O. Box 41185, Olympia, Washington 98504-1185. Upon receipt of an informal opinion request or written petition, the commission will send a copy of the request or written petition to the Office of the Attorney General, Antitrust Section, 900 Fourth Avenue, Suite 2000, Seattle, Washington 98164-1012.

(2) The applicant shall also send a copy of the petition and request for informal opinion to any organization representing employees of the applicant.

(3) Each petition and request for informal opinion shall contain a certificate from each person submitting information stating that the information submitted is true and accurate to the best of that person's knowledge.

[Statutory Authority: RCW 43.72.310. 99-04-049, recodified as § 246-25-130, filed 1/28/99, effective 1/28/99; 95-04-112, § 245-02-130, filed 2/1/95, effective 3/4/95.]

WAC 246-25-131 Public notice and comment. (1) The commission may solicit comments from the public on the petition, request for informal opinion or request for adjudicatory proceeding by causing notice to be published in the state register of the subject matter of a petition, request for informal opinion or request for adjudicatory proceeding, and indicating how, when and where persons may comment.

(2) No later than three days after its publication in the state register, the commission shall cause a copy of the notice of a petition, request for informal opinion or request for adjudicatory proceeding to be mailed to each person who has made a request to the agency for a mailed copy of such notice. The commission will charge for the actual cost of providing individual mailed copies of these notices.

[Statutory Authority: RCW 43.72.310. 99-04-049, recodified as § 246-25-131, filed 1/28/99, effective 1/28/99; 95-04-112, § 245-02-131, filed 2/1/95, effective 3/4/95.]

WAC 246-25-135 Commission to provide copy of informal opinion to applicant. (1) Within five days of receipt of an attorney general's informal opinion requested by the commission under RCW 43.72.310(1), the commission shall mail a copy of the informal opinion to the requesting applicant. The applicant shall provide a copy of the informal opinion to the employee organizations representing the applicant's employees.

(2) No later than three days after its mailing of a copy of the informal opinion to the requesting party, the commission shall cause a copy of the attorney general's informal opinion to be mailed to each person who has made a request to the agency for a mailed copy. The commission may charge for the actual cost of providing individual mailed copies of these informal opinions.

[Statutory Authority: RCW 43.72.310. 99-04-049, recodified as § 246-25-135, filed 1/28/99, effective 1/28/99; 95-04-112, § 245-02-135, filed 2/1/95, effective 3/4/95.]

WAC 246-25-140 Attorney general to provide informal opinion and advice on petitions to the commission. As required by RCW 43.72.310(1), the attorney general will respond to a request for an informal opinion, or for advice regarding a written petition. The attorney general shall have discretion over the scope of the informal opinion or advice provided.

(1) An informal opinion rendered by the attorney general pursuant to RCW 43.72.310(1) will include the following:

(a) A statement of the facts relied upon in the opinion;

(b) A statement of the issues presented by the applicant;

(c) The attorney general's analysis; and

(d) The attorney general's conclusion as to whether the proposed conduct is authorized by chapter 43.72 RCW.

(2) If the attorney general concludes that the proposed conduct is authorized, the informal opinion will include the following, taking into account the size, scope, and nature of the proposed conduct:

(a) A general description of the nature of the continued supervision and oversight the attorney general believes is necessary and appropriate to ensure the proposal continues to be authorized by chapter 43.72 RCW and that its benefits continue to outweigh its disadvantages;

(b) A general description of the form of annual, or more frequent, progress reports the attorney general believes is appropriate to the transaction and sufficient to allow the commission and the attorney general to evaluate the continuing conduct; and

(c) An indication of the types of data the attorney general believes are necessary to evaluate continuing conduct.

(3) The informal opinion, and any written advice provided to the commission regarding a written petition, should include an explanation of when and under what conditions the attorney general would commit not to file an antitrust enforcement action if the informal opinion concludes that the proposed conduct is authorized, or if the commission approves the petition.

[Statutory Authority: RCW 43.72.310. 99-04-049, recodified as § 246-25-140, filed 1/28/99, effective 1/28/99; 95-04-112, § 245-02-140, filed 2/1/95, effective 3/4/95.]

WAC 246-25-145 Applicant may request an adjudicative proceeding or file a petition. An applicant may request an adjudicative proceeding in the following circumstances:

(1) Where the applicant has received an informal opinion pursuant to RCW 43.72.310 and within thirty days of the applicant's receipt of the opinion, the applicant requests an adjudicatory proceeding to determine whether the proposed conduct should be authorized pursuant to RCW 43.72.310 (2)(a) because it is likely to achieve the policy goals of chapter 43.72 RCW and a more competitive alternative is impractical;

(2) If the attorney general concludes in its informal opinion that the conduct proposed is not authorized by chapter 43.72 RCW, the requesting applicant shall have thirty days from the date of receipt of the informal opinion from the commission to file a written petition with the commission requesting approval of conduct that could tend to lessen competition in the relevant market pursuant to RCW 43.72.310 (3). The petition shall constitute an application for an adjudicatory proceeding under RCW 34.05.413; or

(3) Pursuant to RCW 43.72.310(3) an applicant may file a written petition with the commission requesting approval of conduct that could tend to lessen competition in the relevant market regardless of whether it has previously sought an informal opinion. The petition shall constitute an application for an adjudicatory proceeding under RCW 34.05.413.

[Statutory Authority: RCW 43.72.310. 99-04-049, recodified as § 246-25-145, filed 1/28/99, effective 1/28/99; 95-04-112, § 245-02-145, filed 2/1/95, effective 3/4/95.]

WAC 246-25-150 Decision not to conduct an adjudication. If the commission decides not to conduct an adjudicative proceeding in response to an application, the commission shall furnish the applicant a copy of its decision in writing, with a brief statement of the commission's reasons and of any administrative review available to the applicant.

[Statutory Authority: RCW 43.72.310. 99-04-049, recodified as § 246-25-150, filed 1/28/99, effective 1/28/99; 95-04-112, § 245-02-150, filed 2/1/95, effective 3/4/95.]

WAC 246-25-155 Adjudicative proceeding—Rules of procedure. An application for an adjudicative proceeding shall be accompanied by all of the information required for requests for informal opinions and written petitions, as described in WAC 245-02-115 to 245-02-125. The applicant may incorporate by reference any materials previously provided to the commission or attorney general. Except as set forth in WAC 245-02-160 through 245-02-175, the commis-

sion adopts for its use the Model Rules of Procedure set forth in chapter 10-08 WAC.

[Statutory Authority: RCW 43.72.310. 99-04-049, recodified as § 246-25-155, filed 1/28/99, effective 1/28/99; 95-04-112, § 245-02-155, filed 2/1/95, effective 3/4/95.]

WAC 246-25-160 Adjudicative proceedings—Notice of hearing. (1) Within thirty days of receipt of an application for adjudicative proceeding or petition, the commission shall notify the applicant of any obvious errors or omissions, request any additional information it requires and is permitted by law to require regarding the application for adjudicative proceeding or petition, and notify the applicant of the name, mailing address, and telephone number that may be contacted regarding the application.

(2) Within sixty days after receipt of the application, the commission shall commence an adjudicative proceeding by serving notice of hearing on the applicant and all other persons required by RCW 34.05.434; 34.05.417 (1)(b), or decide not to conduct an adjudicative proceeding and furnish the applicant with a copy of its decision in writing, with a brief statement of its reasons for doing so and of any administrative review available.

[Statutory Authority: RCW 43.72.310. 99-04-049, recodified as § 246-25-160, filed 1/28/99, effective 1/28/99; 95-04-112, § 245-02-160, filed 2/1/95, effective 3/4/95.]

WAC 246-25-165 Presiding officer. The determination of the presiding officer for an adjudicative proceeding before the commission shall be governed by RCW 34.05.425.

[Statutory Authority: RCW 43.72.310. 99-04-049, recodified as § 246-25-165, filed 1/28/99, effective 1/28/99; 95-04-112, § 245-02-165, filed 2/1/95, effective 3/4/95.]

WAC 246-25-170 Commission to retain jurisdiction. A grant or denial of authority to engage in proposed conduct shall be deemed a final order of the commission. Where authorization is granted, the commission shall retain jurisdiction over the applicant for purposes of continuing oversight and supervision as required by RCW 43.72.310(6).

[Statutory Authority: RCW 43.72.310. 99-04-049, recodified as § 246-25-170, filed 1/28/99, effective 1/28/99; 95-04-112, § 245-02-170, filed 2/1/95, effective 3/4/95.]

WAC 246-25-175 Adjudicative proceedings—Reconsideration. A petition for reconsideration of a final order under RCW 34.05.470 shall be filed with the commission.

[Statutory Authority: RCW 43.72.310. 99-04-049, recodified as § 246-25-175, filed 1/28/99, effective 1/28/99; 95-04-112, § 245-02-175, filed 2/1/95, effective 3/4/95.]

WAC 246-25-180 Notice of modification or withdrawal of authorization. If at anytime during its ongoing supervision of authorized conduct pursuant to RCW 43.72.-310(6), the commission determines that reason exists to revoke or modify its authorization, the commission shall immediately notify the applicant in writing. An applicant may request an adjudicative proceeding within thirty days of receipt of the notice. If no adjudicative hearing is requested by the applicant within thirty days of receipt of the notice, the commission shall immediately revoke or modify its authorization.

[Statutory Authority: RCW 43.72.310. 99-04-049, recodified as § 246-25-180, filed 1/28/99, effective 1/28/99; 95-04-112, § 245-02-180, filed 2/1/95, effective 3/4/95.]

Chapter 246-50 WAC

COORDINATED QUALITY IMPROVEMENT PROGRAM

WAC

246-50-001	Purpose and scope.
246-50-005	Applicant eligibility.
246-50-010	Definitions.
246-50-020	Coordinated quality improvement program—Components.
246-50-030	Application and approval process.
246-50-035	Modification of an approved plan.
246-50-040	Alternative programs.
246-50-060	Public record disclosure.
246-50-990	Fees.

WAC 246-50-001 Purpose and scope. (1) The purpose of the coordinated quality improvement program is to improve the quality of health care services by identifying and preventing health care malpractice under RCW 43.70.510. This chapter establishes the criteria and approval process for health care entities who choose to apply for a department of health approved coordinated quality improvement program under RCW 43.70.510. Coordinated quality improvement programs approved by the department are provided discovery limitations under RCW 43.70.510 (3) and (4). Information and documents specifically created for, collected, and maintained by an approved quality improvement committee are also exempt from disclosure under chapter 42.17 RCW.

(2) This chapter allows health care provider groups, professional societies or organizations, health care service contractors, health maintenance organizations, health carriers approved under chapter 48.43 RCW, and any other person or entity providing health care coverage under chapter 48.42 RCW that is subject to the authority and rules of any state agency or any subdivision such as health care institutions and medical facilities other than hospitals, to maintain a department-approved coordinated quality improvement program for the purpose of improving the quality of health care and identifying and preventing health care malpractice.

(3) This chapter does not apply to hospital quality improvement programs required by RCW 70.41.200.

[Statutory Authority: RCW 43.70.510, 70.41.200, 4.24.250. 06-03-123, § 246-50-001, filed 1/18/06, effective 2/18/06. Statutory Authority: RCW 43.70.510. 96-09-042, § 246-50-001, filed 4/11/96, effective 5/12/96; 94-24-001, § 246-50-001, filed 11/23/94, effective 12/24/94.]

WAC 246-50-005 Applicant eligibility. (1) The following health care entities may apply for the coordinated quality improvement program:

(a) Provider groups of five or more providers;

(b) Health care professional societies or organizations, including, but not limited to, state or local health care professional associations;

(c) Health care service contractors as defined in RCW 48.44.010;

(d) Health maintenance organizations as defined in RCW 48.46.020;

(e) Health carriers as defined in RCW 48.43.005;

(f) Health care institutions or medical facilities other than hospitals; and

(g) Any person or entity providing personal coverage under chapter 48.42 RCW, and is subject to the authority and rules of any state agency or subdivision.

(2) This chapter does not apply to hospital quality improvement programs required by RCW 70.41.200.

[Statutory Authority: RCW 43.70.510, 70.41.200, 4.24.250. 06-03-123, § 246-50-005, filed 1/18/06, effective 2/18/06.]

WAC 246-50-010 Definitions. The words and phrases in this chapter have the following meanings unless the context clearly indicates otherwise.

(1) "Alternative program" means a coordinated quality improvement program determined by the department to be substantially equivalent to RCW 70.41.200(1).

(2) "Department" means the Washington state department of health.

(3) "Governing body" means:

(a) The person, persons or board responsible for the health care entity; or

(b) In the case of a provider group where no person, persons or board is in charge of all providers; the person, persons or group identified by the provider group is responsible for the coordinated quality improvement program.

(4) "Health care entity" means a health care institution, medical facility, provider group, professional society or organization, health care service contractors, health maintenance organizations, health carriers approved under chapter 48.43 RCW, and any other person or entity providing health care coverage under chapter 48.42 RCW that is subject to the jurisdiction of any state agency or any subdivision thereof, authorized by RCW 43.70.510 to have a department-approved coordinated quality improvement program.

(5) "Health care institution" or "medical facility" includes the following:

(a) Adult residential rehabilitation centers regulated under chapter 71.12 RCW;

(b) Alcohol and drug treatment facilities and hospitals regulated under chapter 70.96A RCW;

(c) Emergency medical care and transportation services regulated under chapter 18.73 RCW;

(d) Boarding homes regulated under chapter 18.20 RCW;

(e) Childbirth centers regulated under chapter 18.46 RCW;

(f) Community mental health centers regulated under chapter 71.05 or 71.24 RCW;

(g) Home health agencies, home care agencies, hospice care centers, and hospice agencies regulated under chapter 70.127 RCW;

(h) Medical test sites regulated under chapter 70.42 RCW;

(i) Nursing homes regulated under chapter 18.51 RCW;

(j) Pharmacies regulated under chapter 18.64 RCW;

(k) Private psychiatric hospitals and residential treatment facilities for psychiatrically impaired children and youth regulated under chapter 71.12 RCW;

(l) Rural health care facilities regulated under chapter 70.175 RCW;

(m) Organizations that provide designated trauma care services individually or jointly under chapter 70.168 RCW;

(n) Facilities owned and operated by a political subdivision or instrumentality of the state, including, but not limited to:

(i) Public health departments;

(ii) Fire districts and departments;

(iii) Soldiers' and veterans' homes;

(iv) State mental health institutions;

(v) Health clinics operated by educational institutions;

(vi) Department of corrections health care facilities;

(vii) County jail health clinics;

(viii) County drug and alcohol treatment facilities; and

(ix) Public hospital districts;

(o) Facilities required by federal law and implementing regulations, including, but not limited to:

(i) Native American health facilities; and

(ii) Veterans' affairs health services; and

(p) Other facilities that the department determines meet the definition of "health care facility" in RCW 48.43.005.

(6) "Health care provider" or "provider" means:

(a) A person regulated under Title 18 RCW to practice health or health related services or otherwise practicing health care services in this state consistent with state law; or

(b) An employee or agent of a person described in (a) of this subsection, acting in the course and scope of the employee's or agent's employment performing health care or auxiliary services.

(7) "Health care provider group" or "provider group" means an organized body or consortium of five or more providers in total.

(8) "Negative health care outcome" means a patient death or impairment of bodily function other than those related to the natural course of illness, disease or proper treatment in accordance with generally accepted health care standards.

(9) "Professional society or organization" means a group of health care professionals, including, but not limited to, state or local health care professional associations.

(10) "Program" means coordinated quality improvement program under RCW 43.70.510.

[Statutory Authority: RCW 43.70.510, 70.41.200, 4.24.250. 06-03-123, § 246-50-010, filed 1/18/06, effective 2/18/06. Statutory Authority: RCW 43.70.510. 96-09-042, § 246-50-010, filed 4/11/96, effective 5/12/96; 94-24-001, § 246-50-010, filed 11/23/94, effective 12/24/94.]

WAC 246-50-020 Coordinated quality improvement program—Components. A program under the provisions of RCW 43.70.510 shall include, at a minimum:

(1) The following components:

(a) A governing body;

(b) A committee, appointed by the governing body, with a broad representation of the services offered, responsible for:

(i) Reviewing services rendered, both retrospectively and prospectively, to improve the quality of health care by measuring key characteristics such as effectiveness, accuracy, timeliness, and cost;

(ii) Reviewing categories and methodologies of services rendered and to be rendered with the goal of improving health care outcomes;

(iii) Overseeing and coordinating the program;

(iv) Ensuring information gathered for the program is reviewed and used to revise health care policies and procedures; and

(v) Reporting to the governing body, at least semiannually, on program activities and actions taken as a result of those activities;

(c) Periodic evaluation of each provider under the purview of the program, including mental and physical capacity, competence in delivering health care, and verification of current credentials;

(d) A procedure for promptly resolving all complaints pertaining to accidents, injuries, treatment and other events that may result in claims of health care malpractice;

(e) A method for continually collecting and maintaining information concerning:

(i) Experience with negative health care outcomes and injurious incidents; and

(ii) Professional liability premiums, settlements, awards, costs for injury prevention and safety improvement activities;

(f) A method for maintaining information gathered under the purview of the program concerning a provider in that provider's personnel or credential file, assuring patient confidentiality;

(g) A process for reporting accidents, injuries, negative health outcomes, and other pertinent information to the quality improvement committee;

(h) A process assuring compliance with reporting requirements to appropriate local, state and federal authorities;

(i) A method for identifying documents and records created specifically for and collected and maintained by the quality improvement committee;

(j) Educational activities for personnel engaged in health care activities, including, but not limited to:

(i) Quality improvement;

(ii) Safety and injury prevention;

(iii) Responsibilities for reporting professional misconduct;

(iv) Legal aspects of providing health care;

(v) Improving communication with health care recipients; and

(vi) Causes of malpractice claims; or

(2) Components determined by the department to be substantially equivalent to subsection (1) of this section.

[Statutory Authority: RCW 43.70.510. 94-24-001, § 246-50-020, filed 11/23/94, effective 12/24/94.]

WAC 246-50-030 Application and approval process. A health care entity seeking department approval of a program shall submit to the department:

(1) An application on forms provided by the department;

(2) The program plan, printed on 8 1/2 by 11 inch paper, including:

(a) A table of contents clearly denoting, at a minimum, where each component specified in WAC 246-50-020 is located within the program plan; and

(b) A detailed description of every aspect of the program;

(3) The fee specified in WAC 246-50-990; and

(4) Other information as may be required by the department.

[Statutory Authority: RCW 43.70.510, 70.41.200, 4.24.250. 06-03-123, § 246-50-030, filed 1/18/06, effective 2/18/06. Statutory Authority: RCW 43.70.510. 94-24-001, § 246-50-030, filed 11/23/94, effective 12/24/94.]

WAC 246-50-035 Modification of an approved plan. (1) To maintain department approval, a health care entity modifying the scope, components or operation of an approved program, shall submit to the department:

(a) An application package specified in WAC 246-50-030(1); and

(b) A detailed description of the modification and how it affects the program.

(2) The department shall review each application package submitted under this section, and (a) send written notification of approval to a health care entity submitting a program with the components specified in WAC 246-50-020; or (b) deny the application and provide the health care entity an opportunity for a brief adjudicative proceeding according to RCW 34.05.482 when the department declines to approve a program.

(3) The department shall retain a copy of the program plan.

[Statutory Authority: RCW 43.70.510, 70.41.200, 4.24.250. 06-03-123, § 246-50-035, filed 1/18/06, effective 2/18/06.]

WAC 246-50-040 Alternative programs. A health care entity seeking department approval of an alternative program shall submit to the department, in addition to the items specified in WAC 246-50-030(1), verification of certification or accreditation by an organization approved by the department.

[Statutory Authority: RCW 43.70.510. 94-24-001, § 246-50-040, filed 11/23/94, effective 12/24/94.]

WAC 246-50-060 Public record disclosure. A program plan and all supplemental material are public records and are subject to the public record disclosure law, chapter 42.17 RCW, once the department receives them. Health care entities submitting material they believe is exempt from public record disclosure should clearly mark the portion or portions as "exempt" and state the specific statutory basis for exemption. The department will notify the health care entity of a public record disclosure request for material the entity marked "exempt" in accordance with this subsection. The department will allow the health care entity ten work days from when it receives department notice to deliver to the department proof that the entity has initiated formal action to secure an injunction under RCW 42.17.330. Upon receiving such proof, the department will notify the public record requester of the action the health care entity initiated under RCW 42.17.330, and take no further action pending a decision by the court. The health care entity must notify the department if it withdraws or takes any other action to terminate the judicial process under RCW 42.17.330. Absent proof from the health care entity that it has initiated action under RCW 42.17.330, the department will disclose the records consistent with state and federal law.

[Statutory Authority: RCW 43.70.510, 70.41.200, 4.24.250. 06-03-123, § 246-50-060, filed 1/18/06, effective 2/18/06.]

WAC 246-50-990 Fees. A health care entity must submit a fee with each application as follows:

Title of Fee	Fee
Original application	$250.00
Alternative application	40.00
Modification application of a department-approved program	65.00

[Statutory Authority: RCW 43.70.510, 70.41.200, 4.24.250. 06-03-123, § 246-50-990, filed 1/18/06, effective 2/18/06. Statutory Authority: RCW 43.70.510. 94-24-001, § 246-50-990, filed 11/23/94, effective 12/24/94.]

Chapter 246-75 WAC
MEDICAL MARIJUANA

WAC

246-75-010 Medical marijuana.

WAC 246-75-010 Medical marijuana. (1) Purpose. The purpose of this section is to define the amount of marijuana a qualifying patient could reasonably expect to need over a sixty-day period for their personal medical use. It is intended to:

(a) Allow medical practitioners to exercise their best professional judgment in the delivery of medical treatment;

(b) Allow designated providers to assist patients in the manner provided in chapter 69.51A RCW; and

(c) Provide clarification to patients, law enforcement and others in the use of medical marijuana.

(2) Definitions.

(a) "Designated provider" means a person as defined in RCW 69.51A.010.

(b) "Plant" means any marijuana plant in any stage of growth.

(c) "Qualifying patient" means a person as defined in RCW 69.51A.010.

(d) "Useable marijuana" means the dried leaves and flowers of the *Cannabis* plant family Moraceae. Useable marijuana excludes stems, stalks, seeds and roots.

(3) Presumptive sixty-day supply.

(a) A qualifying patient and a designated provider may possess a total of no more than twenty-four ounces of useable marijuana, and no more than fifteen plants.

(b) Amounts listed in (a) of this subsection are total amounts of marijuana between both a qualifying patient and a designated provider.

(c) The presumption in this section may be overcome with evidence of a qualifying patient's necessary medical use.

[Statutory Authority: RCW 69.51A.080 and 2007 c 371. 08-21-001, § 246-75-010, filed 10/2/08, effective 11/2/08.]

Chapter 246-100 WAC
COMMUNICABLE AND CERTAIN OTHER DISEASES

WAC

246-100-006 Purpose.
246-100-011 Definitions.
246-100-021 Responsibilities and duties—Health care providers.
246-100-036 Responsibilities and duties—Local health officers.
246-100-040 Procedures for isolation or quarantine.
246-100-045 Conditions and principles for isolation or quarantine.
246-100-050 Isolation or quarantine premises.
246-100-055 Relief from isolation or quarantine.
246-100-060 Right to counsel.
246-100-065 Consolidation.
246-100-070 Enforcement of local health officer orders.
246-100-072 Rules for notification of partners at risk of HIV infection.
246-100-186 Special settings—Health care facilities.
246-100-191 Animals, birds, pets—Measures to prevent human disease.
246-100-201 Birds—Measures to prevent psittacosis.
246-100-202 Special diseases—Sexually transmitted diseases—Duties and authorities.
246-100-203 Special diseases—Sexually transmitted diseases—Health officer orders.
246-100-204 Special diseases—Human immunodeficiency virus (HIV)—Absence of HIV as an occupational qualification.
246-100-205 Special diseases—HIV—Testing and counseling following occupational exposure.
246-100-206 Special diseases—HIV—Testing and counseling of jail detainees.
246-100-207 Human immunodeficiency virus (HIV) testing—Ordering—Laboratory screening—Interpretation—Reporting.
246-100-208 Counseling standard—AIDS counseling.
246-100-209 Counseling standards—Human immunodeficiency virus (HIV) pretest counseling—HIV post-test counseling.
246-100-211 Special diseases—Tuberculosis.

DISPOSITION OF SECTIONS FORMERLY CODIFIED IN THIS CHAPTER

246-100-016 Confidentiality. [Statutory Authority: RCW 70.24.125 and 70.24.130. 99-17-077, § 246-100-016, filed 8/13/99, effective 9/1/99. Statutory Authority: RCW 43.20.050 and 70.24.130. 92-02-019 (Order 225B), § 246-100-016, filed 12/23/91, effective 1/23/92. Statutory Authority: RCW 43.20.050. 91-02-051 (Order 124B), recodified as § 246-100-016, filed 12/27/90, effective 1/31/91. Statutory Authority: RCW 70.24.-105. 90-07-033 (Order 043), § 248-100-016, filed 3/14/90, effective 4/14/90. Statutory Authority: Chapter 70.24 RCW. 88-21-093 (Order 322), § 248-100-016, filed 10/19/88; 88-17-057 (Order 317), § 248-100-016, filed 8/17/88. Statutory Authority: RCW 43.20.050. 87-11-047 (Order 302), § 248-100-016, filed 5/19/87.] Repealed by 00-23-120, filed 11/22/00, effective 12/23/00. Statutory Authority: RCW 43.20.050.

246-100-026 Responsibilities and duties—Veterinarians. [Statutory Authority: RCW 43.20.050. 92-02-019 (Order 225B), § 246-100-026, filed 12/23/91, effective 1/23/92; 91-02-051 (Order 124B), recodified as § 246-100-026, filed 12/27/90, effective 1/31/91; 88-07-063 (Order 308), § 248-100-026, filed 3/16/88.] Repealed by 00-23-120, filed 11/22/00, effective 12/23/00. Statutory Authority: RCW 43.20.050.

246-100-031 Responsibilities and duties—Laboratory directors. [Statutory Authority: RCW 43.20.050. 92-02-019 (Order 225B), § 246-100-031, filed 12/23/91, effective 1/23/92; 91-02-051 (Order 124B), recodified as § 246-100-031, filed 12/27/90, effective 1/31/91; 87-11-047 (Order 302), § 248-100-031, filed 5/19/87.] Repealed by 00-23-120, filed 11/22/00, effective 12/23/00. Statutory Authority: RCW 43.20.050.

246-100-041 Responsibilities and duties—State health officer. [Statutory Authority: RCW 70.24.125 and 70.24.130. 99-17-077, § 246-100-041, filed 8/13/99, effective 9/1/99. Statutory Authority: Chapter 70.24 RCW. 93-08-036 (Order 354B), § 246-100-041, filed 4/1/93, effective 5/2/93. Statutory Authority: RCW 43.20.050. 92-02-019 (Order 225B), § 246-100-041, filed 12/23/91, effective 1/23/92; 91-02-051 (Order 124B), recodified as § 246-100-041, filed 12/27/90, effective 1/31/91; 87-11-047 (Order 302), § 248-100-041, filed 5/19/87.] Repealed by 00-23-120, filed 11/22/00, effective 12/23/00. Statutory Authority: RCW 43.20.050.

246-100-042 Reporting of blood lead levels. [Statutory Authority: RCW 43.20.050. 99-11-037, § 246-100-042, filed 5/13/99, effective 5/14/99; 96-11-077, § 246-100-042, filed 5/13/96, effective 6/13/96. Statutory Authority: RCW 43.20.050(3). 93-10-038 (Order 358), § 246-100-042, filed 4/28/93, effective 5/29/93.] Repealed by 00-

23-120, filed 11/22/00, effective 12/23/00. Statutory Authority: RCW 43.20.050.

246-100-043 Surveillance report to the board—State health officer. [Statutory Authority: RCW 70.24.125 and 70.24.130. 99-17-077, § 246-100-043, filed 8/13/99, effective 9/1/99.] Repealed by 00-23-120, filed 11/22/00, effective 12/23/00. Statutory Authority: RCW 43.20.050.

246-100-046 Responsibilities and duties—Cases, suspected cases, carriers, contacts, and others. [Statutory Authority: RCW 43.20.050. 92-02-019 (Order 225B), § 246-100-046, filed 12/23/91, effective 1/23/92; 91-02-051 (Order 124B), recodified as § 246-100-046, filed 12/27/90, effective 1/31/91; 87-11-047 (Order 302), § 248-100-046, filed 5/19/87.] Repealed by 00-23-120, filed 11/22/00, effective 12/23/00. Statutory Authority: RCW 43.20.050.

246-100-071 Responsibility for reporting to and cooperating with the local health department. [Statutory Authority: RCW 43.20.050. 92-02-019 (Order 225B), § 246-100-071, filed 12/23/91, effective 1/23/92; 91-02-051 (Order 124B), recodified as § 246-100-071, filed 12/27/90, effective 1/31/91; 87-11-047 (Order 302), § 248-100-071, filed 5/19/87.] Repealed by 00-23-120, filed 11/22/00, effective 12/23/00. Statutory Authority: RCW 43.20.050.

246-100-076 Reportable diseases and conditions. [Statutory Authority: RCW 70.24.125 and 70.24.130. 99-17-077, § 246-100-076, filed 8/13/99, effective 9/1/99. Statutory Authority: RCW 70.28.032. 96-23-064, § 246-100-076, filed 11/20/96, effective 12/21/96. Statutory Authority: Chapter 70.24 RCW. 93-08-036 (Order 354B), § 246-100-076, filed 4/1/93, effective 5/2/93. Statutory Authority: RCW 43.20.050. 92-02-019 (Order 225B), § 246-100-076, filed 12/23/91, effective 1/23/92; 91-02-051 (Order 124B), recodified as § 246-100-076, filed 12/27/90, effective 1/31/91; 87-11-047 (Order 302), § 248-100-076, filed 5/19/87.] Repealed by 00-23-120, filed 11/22/00, effective 12/23/00. Statutory Authority: RCW 43.20.050, 70.24.125 and 70.28.010.

246-100-081 Reports—Content—Time—Hospital monthly report permitted for certain diseases. [Statutory Authority: RCW 43.20.050. 92-02-019 (Order 225B), § 246-100-081, filed 12/23/91, effective 1/23/92; 91-02-051 (Order 124B), recodified as § 246-100-081, filed 12/27/90, effective 1/31/91; 87-11-047 (Order 302), § 248-100-081, filed 5/19/87.] Repealed by 00-23-120, filed 11/22/00, effective 12/23/00. Statutory Authority: RCW 43.20.050, 70.24.125 and 70.28.010.

246-100-086 Reporting diseases and conditions directly to department. [Statutory Authority: RCW 43.20.050 and 70.104.055. 92-02-019 (Order 225B), § 246-100-086, filed 12/23/91, effective 1/23/92. Statutory Authority: RCW 43.20.050. 91-02-051 (Order 124B), recodified as § 246-100-086, filed 12/27/90, effective 1/31/91. Statutory Authority: Chapter 70.104 RCW. 90-10-036 (Order 049), § 248-100-086, filed 4/26/90, effective 5/27/90. Statutory Authority: RCW 43.20.050. 87-11-047 (Order 302), § 248-100-086, filed 5/19/87.] Repealed by 00-23-120, filed 11/22/00, effective 12/23/00. Statutory Authority: RCW 43.20.050.

246-100-091 Handling of reports by local health department—Handling of reports by department. [Statutory Authority: RCW 43.20.050. 91-02-051 (Order 124B), recodified as § 246-100-091, filed 12/27/90, effective 1/31/91; 87-11-047 (Order 302), § 248-100-091, filed 5/19/87.] Repealed by 00-23-120, filed 11/22/00, effective 12/23/00. Statutory Authority: RCW 43.20.050.

246-100-166 Immunization of child care and school children against certain vaccine-preventable diseases. [Statutory Authority: RCW 43.20.050, 28A.210.140. 08-03-071, § 246-100-166, filed 1/14/08, effective 2/14/08; 06-17-183, § 246-100-166, filed 8/23/06, effective 9/23/06. Statutory Authority: RCW 28A.210.140. 05-16-051, § 246-100-166, filed 7/28/05, effective 8/28/05; 05-08-094, § 246-100-166, filed 4/1/05, effective 5/2/05; 96-04-079, § 246-100-166, filed 2/7/96, effective 3/9/96. Statutory Authority: RCW 28A.210.140 and 43.20.050. 91-15-066 (Order 182B), § 246-100-166, filed 7/22/91, effective 8/22/91. Statutory Authority: RCW 43.20.050. 91-02-051 (Order 124B), recodified as § 246-100-166, filed 12/27/90, effective 1/31/91; 88-07-063 (Order 308), § 248-100-166, filed 3/16/88.] Repealed by 09-02-003, filed 12/26/08, effective 1/26/09. Statutory Authority: RCW 28A.210.140. Later promulgation, see chapter 246-105 WAC.

246-100-171 Special settings—Food service establishments. [Statutory Authority: RCW 43.20.050. 92-02-019 (Order 225B), § 246-100-171, filed 12/23/91, effective 1/23/92; 91-02-051 (Order 124B), recodified as § 246-100-171, filed 12/27/90, effective 1/31/91; 88-07-063 (Order 308), § 248-100-171, filed 3/16/88.] Repealed by 00-23-120, filed 11/22/00, effective 12/23/00. Statutory Authority: RCW 43.20.050.

246-100-176 Special settings—Schools. [Statutory Authority: RCW 43.20.050. 92-02-019 (Order 225B), § 246-100-176, filed 12/23/91, effective 1/23/92; 91-02-051 (Order 124B), recodified as § 246-100-176, filed 12/27/90, effective 1/31/91; 88-07-063 (Order 308), § 248-100-176, filed 3/16/88.] Repealed by 00-23-120, filed 11/22/00, effective 12/23/00. Statutory Authority: RCW 43.20.050.

246-100-181 Special settings—Child day care facilities. [Statutory Authority: RCW 43.20.050. 92-02-019 (Order 225B), § 246-100-181, filed 12/23/91, effective 1/23/92; 91-02-051 (Order 124B), recodified as § 246-100-181, filed 12/27/90, effective 1/31/91; 88-07-063 (Order 308), § 248-100-181, filed 3/16/88.] Repealed by 00-23-120, filed 11/22/00, effective 12/23/00. Statutory Authority: RCW 43.20.050.

246-100-196 Animal bites—Report to local health department. [Statutory Authority: RCW 43.20.050. 92-02-019 (Order 225B), § 246-100-196, filed 12/23/91, effective 1/23/92; 91-02-051 (Order 124B), recodified as § 246-100-196, filed 12/27/90, effective 1/31/91; 88-07-063 (Order 308), § 248-100-196, filed 3/16/88.] Repealed by 00-23-120, filed 11/22/00, effective 12/23/00. Statutory Authority: RCW 43.20.050.

246-100-216 Special diseases—Surveillance for influenza. [Statutory Authority: RCW 43.20.050. 91-02-051 (Order 124B), recodified as § 246-100-216, filed 12/27/90, effective 1/31/91; 87-11-047 (Order 302), § 248-100-216, filed 5/19/87.] Repealed by 00-23-120, filed 11/22/00, effective 12/23/00. Statutory Authority: RCW 43.20.050.

246-100-217 Special condition—Pesticide poisoning. [Statutory Authority: RCW 43.20.050 and 70.104.055. 92-02-019 (Order 225B), § 246-100-217, filed 12/23/91, effective 1/23/92. Statutory Authority: RCW 43.20.050. 91-02-051 (Order 124B), recodified as § 246-100-217, filed 12/27/90, effective 1/31/91. Statutory Authority: Chapter 70.104 RCW. 90-10-036 (Order 049), § 248-100-217, filed 4/26/90, effective 5/27/90.] Repealed by 00-23-120, filed 11/22/00, effective 12/23/00. Statutory Authority: RCW 70.104.030.

246-100-218 Special condition—Gunshot wounds. [Statutory Authority: RCW 43.70.545. 96-08-028, § 246-100-218, filed 3/27/96, effective 4/27/96.] Repealed by 00-23-120, filed 11/22/00, effective 12/23/00. Statutory Authority: 43.70.545.

246-100-221 Duties of laboratories—Annual registration of laboratories. [Statutory Authority: RCW 43.20.050. 91-02-051 (Order 124B), recodified as § 246-100-221, filed 12/27/90, effective 1/31/91; 87-11-047 (Order 302), § 248-100-221, filed 5/19/87.] Repealed by 96-19-043, filed 9/12/96, effective 10/13/96. Statutory Authority: RCW 43.20.050.

246-100-226 Duties of laboratories—Approval of laboratories to perform prenatal serologic tests for syphilis. [Statutory Authority: RCW 43.20.050. 92-02-019 (Order 225B), § 246-100-226, filed 12/23/91, effective 1/23/92; 91-02-051 (Order 124B), recodified as § 246-100-226, filed 12/27/90, effective 1/31/91; 87-11-047 (Order 302), § 248-100-226, filed 5/19/87.] Repealed by 96-19-043, filed 9/12/96, effective 10/13/96. Statutory Authority: RCW 43.20.050.

246-100-231 Duties of laboratories—Submission of specimens by laboratories. [Statutory Authority: RCW 43.20.050. 92-02-019 (Order 225B), § 246-100-231, filed 12/23/91, effective 1/23/92; 91-02-051 (Order 124B), recodified as § 246-100-231, filed 12/27/90, effective 1/31/91; 88-07-063 (Order 308), § 248-100-231, filed 3/16/88; 87-11-047 (Order 302), § 248-100-231, filed 5/19/87.] Repealed by 00-23-120, filed 11/22/00, effective 12/23/00. Statutory Authority: RCW 43.20.050, 70.24.-125 and 70.28.010.

246-100-236 Duties of laboratories—Reporting of laboratory results indicative of certain reportable diseases. [Statutory Authority: RCW 70.24.125 and 70.24.130. 99-17-077,

§ 246-100-236, filed 8/13/99, effective 9/1/99. Statutory Authority: RCW 70.24.130. 95-13-037, § 246-100-236, filed 6/14/95, effective 7/15/95. Statutory Authority: Chapter 70.24 RCW. 93-08-036 (Order 354B), § 246-100-236, filed 4/1/93, effective 5/2/93. Statutory Authority: RCW 43.20.050. 92-02-019 (Order 225B), § 246-100-236, filed 12/23/91, effective 1/23/92; 91-02-051 (Order 124B), recodified as § 246-100-236, filed 12/27/90, effective 1/31/91; 88-07-063 (Order 308), § 248-100-236, filed 3/16/88; 87-11-047 (Order 302), § 248-100-236, filed 5/19/87.] Repealed by 00-23-120, filed 11/22/00, effective 12/23/00. Statutory Authority: RCW 43.20.050, 70.24.125 and 70.28.010.

246-100-241 Duties of laboratories—Duty to cooperate with local health departments and the department. [Statutory Authority: RCW 43.20.050. 91-02-051 (Order 124B), recodified as § 246-100-241, filed 12/27/90, effective 1/31/91; 87-11-047 (Order 302), § 248-100-241, filed 5/19/87.] Repealed by 00-23-120, filed 11/22/00, effective 12/23/00. Statutory Authority: RCW 43.20.050.

WAC 246-100-006 Purpose. The following rules and regulations are adopted under the authority of chapter 43.20 RCW to protect the health and well-being of the public by controlling communicable and certain other diseases.

[Statutory Authority: RCW 43.20.050. 91-02-051 (Order 124B), recodified as § 246-100-006, filed 12/27/90, effective 1/31/91; 87-11-047 (Order 302), § 248-100-006, filed 5/19/87.]

WAC 246-100-011 Definitions. The following definitions shall apply in the interpretation and enforcement of chapter 246-100 WAC:

(1) "Acquired immunodeficiency syndrome (AIDS)" means illness, disease, or conditions defined and described by the Centers for Disease Control, U.S. Public Health Service, Morbidity and Mortality Weekly Report (MMWR), December 18, 1992, Volume 41, Number RR-17. A copy of this publication is available for review at the department and at each local health department.

(2) "AIDS counseling" means counseling directed toward:

(a) Increasing the individual's understanding of acquired immunodeficiency syndrome; and

(b) Assessing the individual's risk of HIV acquisition and transmission; and

(c) Affecting the individual's behavior in ways to reduce the risk of acquiring and transmitting HIV infection.

(3) "Anonymous HIV testing" means that the name or identity of the individual tested for HIV will not be recorded or linked to the HIV test result. However, once the individual testing positive receives HIV health care or treatment services, reporting of the identity of the individual to the state or local public health officer is required.

(4) "Board" means the Washington state board of health.

(5) "Case" means a person, alive or dead, having been diagnosed to have a particular disease or condition by a health care provider with diagnosis based on clinical or laboratory criteria or both.

(6) "Child day care facility" means an agency regularly providing care for a group of children for less than twenty-four hours a day and subject to licensing under chapter 74.15 RCW.

(7) "Communicable disease" means an illness caused by an infectious agent which can be transmitted from one person, animal, or object to another person by direct or indirect means including transmission via an intermediate host or vector, food, water, or air.

(8) "Confidential HIV testing" means that the name or identity of the individual tested for HIV will be recorded and linked to the HIV test result, and that the name of the individual testing positive for HIV will be reported to the state or local health officer in a private manner.

(9) "Contaminated" or "contamination" means containing or having contact with infectious agents or chemical or radiological materials that pose an immediate threat to present or future public health.

[(10)] "Contamination control measures" means the management of persons, animals, goods, and facilities that are contaminated, or suspected to be contaminated, in a manner to avoid human exposure to the contaminant, prevent the contaminant from spreading, and/or effect decontamination.

(11) "Department" means the Washington state department of health.

(12) "Detention" or "detainment" means physical restriction of activities of an individual by confinement for the purpose of controlling or preventing a serious and imminent threat to public health and may include physical plant, facilities, equipment, and/or personnel to physically restrict activities of the individual to accomplish such purposes.

(13) "Disease control measures" means the management of persons, animals, goods, and facilities that are infected with, suspected to be infected with, exposed to, or suspected to be exposed to an infectious agent in a manner to prevent transmission of the infectious agent to humans.

(14) "Health care facility" means:

(a) Any facility or institution licensed under chapter 18.20 RCW, boarding home, chapter 18.46 RCW, birthing centers, chapter 18.51 RCW, nursing homes, chapter 70.41 RCW, hospitals, or chapter 71.12 RCW, private establishments, clinics, or other settings where one or more health care providers practice; and

(b) In reference to a sexually transmitted disease, other settings as defined in chapter 70.24 RCW.

(15) "Health care provider" means any person having direct or supervisory responsibility for the delivery of health care who is:

(a) Licensed or certified in this state under Title 18 RCW; or

(b) Is military personnel providing health care within the state regardless of licensure.

(16) "HIV testing" means conducting a laboratory test or sequence of tests to detect the human immunodeficiency virus (HIV) or antibodies to HIV performed in accordance with requirements to WAC 246-100-207. To assure that the protection, including but not limited to, pre- and post-test counseling, consent, and confidentiality afforded to HIV testing as described in chapter 246-100 WAC also applies to the enumeration of CD4 + (T4) lymphocyte counts (CD4 + counts) and CD4 + (T4) percents of total lymphocytes (CD4 + percents) when used to diagnose HIV infection, CD4 + counts and CD4 + percents will be presumed HIV testing except when shown by clear and convincing evidence to be for use in the following circumstances:

(a) Monitoring previously diagnosed infection with HIV;

(b) Monitoring organ or bone marrow transplants;

(c) Monitoring chemotherapy;

(d) Medical research; or

(e) Diagnosis or monitoring of congenital immunodeficiency states or autoimmune states not related to HIV.

The burden of proving the existence of one or more of the circumstances identified in (a) through (e) of this subsection shall be on the person asserting such existence.

(17) "Infectious agent" means an organism such as a virus, rickettsia, bacteria, fungus, protozoan, or helminth that is capable of producing infection or infectious disease.

(18) "Isolation" means the separation, for the period of communicability or contamination, of infected or contaminated persons or animals from others in such places and under such conditions as to prevent or limit the direct or indirect transmission of the infectious agent or contaminant from those infected or contaminated to those who are susceptible or who may spread the agent or contaminant to others.

(19) "Local health department" means the city, town, county, or district agency providing public health services to persons within the area, as provided in chapter 70.05 RCW and chapter 70.08 RCW.

(20) "Local health officer" means the individual having been appointed under chapter 70.05 RCW as the health officer for the local health department, or having been appointed under chapter 70.08 RCW as the director of public health of a combined city-county health department, or his or her delegee appointed by the local board of health.

(21) "Nosocomial infection" means an infection acquired in a hospital or other health care facility.

(22) "Outbreak" means the occurrence of cases of a disease or condition in any area over a given period of time in excess of the expected number of cases.

(23) "Post-test counseling" means counseling after the HIV test when results are provided and directed toward:

(a) Increasing the individual's understanding of human immunodeficiency virus (HIV) infection;

(b) Affecting the individual's behavior in ways to reduce the risk of acquiring and transmitting HIV infection;

(c) Encouraging the individual testing positive to notify persons with whom there has been contact capable of spreading HIV;

(d) Assessing emotional impact of HIV test results; and

(e) Appropriate referral for other community support services.

(24) "Pretest counseling" means counseling provided prior to HIV testing and aimed at:

(a) Helping an individual to understand:

(i) Ways to reduce the risk of human immunodeficiency virus (HIV) transmission;

(ii) The nature, purpose, and potential ramifications of HIV testing;

(iii) The significance of the results of HIV testing; and

(iv) The dangers of HIV infection; and

(b) Assessing the individual's ability to cope with the results of HIV testing.

(25) "Principal health care provider" means the attending physician or other health care provider recognized as primarily responsible for diagnosis and treatment of a patient or, in the absence of such, the health care provider initiating diagnostic testing or therapy for a patient.

(26) "Quarantine" means the limitation of freedom of movement of such well persons or domestic animals as have been exposed to, or are suspected to have been exposed to, an infectious agent, for a period of time not longer than the longest usual incubation period of the infectious agent, in such manner as to prevent effective contact with those not so exposed.

(27) "School" means a facility for programs of education as defined in RCW 28A.210.070 (preschool and kindergarten through grade twelve).

(28) "Sexually transmitted disease (STD)" means a bacterial, viral, fungal, or parasitic disease or condition which is usually transmitted through sexual contact, including:

(a) Acute pelvic inflammatory disease;

(b) Chancroid;

(c) Chlamydia trachomatis infection;

(d) Genital and neonatal herpes simplex;

(e) Genital human papilloma virus infection;

(f) Gonorrhea;

(g) Granuloma inguinale;

(h) Hepatitis B infection;

(i) Human immunodeficiency virus infection (HIV) and acquired immunodeficiency syndrome (AIDS);

(j) Lymphogranuloma venereum;

(k) Nongonococcal urethritis (NGU); and

(l) Syphilis.

(29) "Spouse" means any individual who is the marriage partner of an HIV-infected individual, or who has been the marriage partner of the HIV-infected individual within the ten-year period prior to the diagnosis of HIV-infection, and evidence exists of possible exposure to HIV.

(30) "State health officer" means the person designated by the secretary of the department to serve as statewide health officer, or, in the absence of such designation, the person having primary responsibility for public health matters in the state.

(31) "Suspected case" or "suspected to be infected" means the local health officer, in his or her professional judgment, reasonably believes that infection with a particular infectious agent is likely based on signs and symptoms, laboratory evidence, or contact with an infected individual, animal, or contaminated environment.

(32) "Veterinarian" means an individual licensed under provisions of chapter 18.92 RCW, veterinary medicine, surgery, and dentistry and practicing animal health care.

[Statutory Authority: RCW 70.24.130 and 70.24.380. 05-11-110, § 246-100-011, filed 5/18/05, effective 6/18/05. Statutory Authority: RCW 43.20.050 (2)(d), 70.05.050 and 70.05.060. 03-06-003, § 246-100-011, filed 2/19/03, effective 2/19/03. Statutory Authority: RCW 43.20.050. 00-23-120, § 246-100-011, filed 11/22/00, effective 12/23/00. Statutory Authority: RCW 70.24.022, [70.24].340 and Public Law 104-146. 97-15-099, § 246-100-011, filed 7/21/97, effective 7/21/97. Statutory Authority: Chapter 70.24 RCW. 93-08-036 (Order 354B), § 246-100-011, filed 4/1/93, effective 5/2/93. Statutory Authority: RCW 43.20.050 and 70.24.130. 92-02-019 (Order 225B), § 246-100-011, filed 12/23/91, effective 1/23/92. Statutory Authority: RCW 43.20.050. 91-02-051 (Order 124B), recodified as § 246-100-011, filed 12/27/90, effective 1/31/91. Statutory Authority: Chapter 70.24 RCW. 89-07-095 (Order 325), § 248-100-011, filed 3/22/89; 88-17-057 (Order 317), § 248-100-011, filed 8/17/88. Statutory Authority: RCW 43.20.050. 88-07-063 (Order 308), § 248-100-011, filed 3/16/88; 87-11-047 (Order 302), § 248-100-011, filed 5/19/87.]

WAC 246-100-021 Responsibilities and duties—Health care providers. Every health care provider, as defined in chapter 246-100 WAC, shall:

(1) Provide adequate, understandable instruction in control measures designed to prevent the spread of disease to:

(a) Each patient with a communicable disease under his or her care; and

(b) Others as appropriate to prevent spread of disease.

(2) Cooperate with public health authorities during investigation of:

(a) Circumstances of a case or suspected case of a notifiable condition or other communicable disease; and

(b) An outbreak or suspected outbreak of illness.

Comply with requirements in WAC 246-100-206, 246-100-211, and chapter 246-101 WAC.

(3) Use protocols established in *Communicable Diseases Manual*, seventeenth edition, James Chin, MD, MPH, editor, 2000, when treating wounds caused by animal bites. A copy of this publication is available for review at the department and at each local health department.

[Statutory Authority: RCW 43.20.050. 00-23-120, § 246-100-021, filed 11/22/00, effective 12/23/00. Statutory Authority: RCW 43.20.050, 70.24.-130 and 70.104.055. 92-02-019 (Order 225B), § 246-100-021, filed 12/23/91, effective 1/23/92. Statutory Authority: RCW 43.20.050. 91-02-051 (Order 124B), recodified as § 246-100-021, filed 12/27/90, effective 1/31/91. Statutory Authority: Chapter 70.104 RCW. 90-10-036 (Order 049), § 248-100-021, filed 4/26/90, effective 5/27/90. Statutory Authority: RCW 43.20.050. 87-11-047 (Order 302), § 248-100-021, filed 5/19/87.]

WAC 246-100-036 Responsibilities and duties—Local health officers. (1) The local health officer shall establish, in consultation with local health care providers, health facilities, emergency management personnel, law enforcement agencies, and any other entity he or she deems necessary, plans, policies, and procedures for instituting emergency measures necessary to prevent the spread of communicable disease or contamination.

(2) Local health officers shall:

(a) Notify health care providers within the health district regarding requirements in this chapter;

(b) Ensure anonymous HIV testing is reasonably available;

(c) Make HIV testing, AIDS counseling, and pretest and post-test counseling, as defined in this chapter, available for voluntary, mandatory, and anonymous testing and counseling as required by RCW 70.24.400;

(d) Make information on anonymous HIV testing, AIDS counseling, and pretest and post-test counseling, as described under WAC 246-100-208 and 246-100-209, available;

(e) Use identifying information on HIV-infected individuals provided according to chapter 246-101 WAC only:

(i) For purposes of contacting the HIV-positive individual to provide test results and post-test counseling; or

(ii) To contact persons who have experienced substantial exposure, including sex and injection equipment-sharing partners, and spouses; or

(iii) To link with other name-based public health disease registries when doing so will improve ability to provide needed care services and counseling and disease prevention; and

(f) Destroy documentation of referral information established in WAC 246-100-072 and this subsection containing identities and identifying information on HIV-infected individuals and at-risk partners of those individuals immediately after notifying partners or within three months, whichever occurs first.

(3) Local health officers shall, when necessary, conduct investigations and institute disease control and contamination control measures, including medical examination, testing, counseling, treatment, vaccination, decontamination of persons or animals, isolation, quarantine, vector control, condemnation of food supplies, and inspection and closure of facilities, consistent with those indicated in the 17th edition, 2000 of the *Control of Communicable Disease Manual*, published by the American Public Health Association, or other measures he or she deems necessary based on his or her professional judgment, current standards of practice and the best available medical and scientific information.

(4) A local health department may make agreements with tribal governments, with federal authorities or with state agencies or institutions of higher education that empower the local health officer to conduct investigations and institute control measures in accordance with WAC 246-100-040 on tribal lands, federal enclaves and military bases, and the campuses of state institutions. State institutions include, but are not limited to, state-operated colleges and universities, schools, hospitals, prisons, group homes, juvenile detention centers, institutions for juvenile delinquents, and residential habilitation centers.

[Statutory Authority: RCW 43.20.050. 03-17-022, § 246-100-036, filed 8/13/03, effective 9/13/03. Statutory Authority: RCW 43.20.050 (2)(d), 70.05.050, and 70.05.060. 03-05-048, § 246-100-036, filed 2/13/03, effective 2/13/03. Statutory Authority: RCW 43.20.050. 00-23-120, § 246-100-036, filed 11/22/00, effective 12/23/00. Statutory Authority: RCW 70.24.-125 and 70.24.130. 99-17-077, § 246-100-036, filed 8/13/99, effective 9/1/99. Statutory Authority: RCW 70.24.022, [70.24].340 and Public Law 104-146. 97-15-099, § 246-100-036, filed 7/21/97, effective 7/21/97. Statutory Authority: RCW 43.20.050 and 70.24.130. 92-02-019 (Order 225B), § 246-100-036, filed 12/23/91, effective 1/23/92. Statutory Authority: RCW 43.20.050. 91-02-051 (Order 124B), recodified as § 246-100-036, filed 12/27/90, effective 1/31/91. Statutory Authority: Chapter 70.24 RCW. 89-02-008 (Order 324), § 248-100-036, filed 12/27/88. Statutory Authority: RCW 43.20.050. 88-07-063 (Order 308), § 248-100-036, filed 3/16/88.]

WAC 246-100-040 Procedures for isolation or quarantine. (1) At his or her sole discretion, a local health officer may issue an emergency detention order causing a person or group of persons to be immediately detained for purposes of isolation or quarantine in accordance with subsection (3) of this section, or may petition the superior court *ex parte* for an order to take the person or group of persons into involuntary detention for purposes of isolation or quarantine in accordance with subsection (4) of this section, provided that he or she:

(a) Has first made reasonable efforts, which shall be documented, to obtain voluntary compliance with requests for medical examination, testing, treatment, counseling, vaccination, decontamination of persons or animals, isolation, quarantine, and inspection and closure of facilities, or has determined in his or her professional judgment that seeking voluntary compliance would create a risk of serious harm; and

(b) Has reason to believe that the person or group of persons is, or is suspected to be, infected with, exposed to, or contaminated with a communicable disease or chemical, biological, or radiological agent that could spread to or contaminate others if remedial action is not taken; and

(c) Has reason to believe that the person or group of persons would pose a serious and imminent risk to the health and safety of others if not detained for purposes of isolation or quarantine.

(2) A local health officer may invoke the powers of police officers, sheriffs, constables, and all other officers and employees of any political subdivisions within the jurisdiction of the health department to enforce immediately orders given to effectuate the purposes of this section in accordance with the provisions of RCW 43.20.050(4) and 70.05.120.

(3) If a local health officer orders the immediate involuntary detention of a person or group of persons for purposes of isolation or quarantine:

(a) The emergency detention order shall be for a period not to exceed ten days.

(b) The local health officer shall issue a written emergency detention order as soon as reasonably possible and in all cases within twelve hours of detention that shall specify the following:

(i) The identity of all persons or groups subject to isolation or quarantine;

(ii) The premises subject to isolation or quarantine;

(iii) The date and time at which isolation or quarantine commences;

(iv) The suspected communicable disease or infectious agent if known;

(v) The measures taken by the local health officer to seek voluntary compliance or the basis on which the local health officer determined that seeking voluntary compliance would create a risk of serious harm; and

(vi) The medical basis on which isolation or quarantine is justified.

(c) The local health officer shall provide copies of the written emergency detention order to the person or group of persons detained or, if the order applies to a group and it is impractical to provide individual copies, post copies in a conspicuous place in the premises where isolation or quarantine has been imposed.

(d) Along with the written order, and by the same means of distribution, the local health officer shall provide the person or group of persons detained with the following written notice:

NOTICE: You have the right to petition the superior court for release from isolation or quarantine in accordance with WAC 246-100-055. You have a right to legal counsel. If you are unable to afford legal counsel, then counsel will be appointed for you at government expense and you should request the appointment of counsel at this time. If you currently have legal counsel, then you have an opportunity to contact that counsel for assistance.

(4) If a local health officer petitions the superior court *ex parte* for an order authorizing involuntary detention of a person or group of persons for purposes of isolation or quarantine pursuant to this section:

(a) The petition shall specify:

(i) The identity of all persons or groups to be subject to isolation or quarantine;

(ii) The premises where isolation or quarantine will take place;

(iii) The date and time at which isolation or quarantine will commence;

(iv) The suspected communicable disease or infectious agent if known;

(v) The anticipated duration of isolation or quarantine based on the suspected communicable disease or infectious agent if known;

(vi) The measures taken by the local health officer to seek voluntary compliance or the basis on which the local health officer determined that seeking voluntary compliance would create a risk of serious harm;

(vii) The medical basis on which isolation or quarantine is justified.

(b) The petition shall be accompanied by the declaration of the local health officer attesting to the facts asserted in the petition, together with any further information that may be relevant and material to the court's consideration.

(c) Notice to the persons or groups identified in the petition shall be accomplished in accordance with the rules of civil procedure.

(d) The court shall hold a hearing on a petition filed pursuant to this section within seventy-two hours of filing, exclusive of Saturdays, Sundays, and holidays.

(e) The court shall issue the order if there is a reasonable basis to find that isolation or quarantine is necessary to prevent a serious and imminent risk to the health and safety of others.

(f) A court order authorizing isolation or quarantine as a result of an *ex parte* hearing shall:

(i) Specify a maximum duration for isolation or quarantine not to exceed ten days;

(ii) Identify the isolated or quarantined persons or groups by name or shared or similar characteristics or circumstances;

(iii) Specify factual findings warranting isolation or quarantine pursuant to this section;

(iv) Include any conditions necessary to ensure that isolation or quarantine is carried out within the stated purposes and restrictions of this section;

(v) Specify the premises where isolation or quarantine will take place; and

(vi) Be served on all affected persons or groups in accordance with the rules of civil procedure.

(5) A local health officer may petition the superior court for an order authorizing the continued isolation or quarantine of a person or group detained under subsections (3) or (4) of this section for a period up to thirty days.

(a) The petition shall specify:

(i) The identity of all persons or groups subject to isolation or quarantine;

(ii) The premises where isolation or quarantine is taking place;

(iii) The communicable disease or infectious agent if known;

(iv) The anticipated duration of isolation or quarantine based on the suspected communicable disease or infectious agent if known;

(v) The medical basis on which continued isolation or quarantine is justified.

(b) The petition shall be accompanied by the declaration of the local health officer attesting to the facts asserted in the petition, together with any further information that may be relevant and material to the court's consideration.

(c) The petition shall be accompanied by a statement of compliance with the conditions and principles for isolation and quarantine contained in WAC 246-100-045.

(d) Notice to the persons or groups identified in the petition shall be accomplished in accordance with the rules of civil procedure.

(e) The court shall hold a hearing on a petition filed pursuant to this subsection within seventy-two hours of filing, exclusive of Saturdays, Sundays, and holidays. In extraordinary circumstances and for good cause shown, the local health officer may apply to continue the hearing date for up to ten days, which continuance the court may grant at its discretion giving due regard to the rights of the affected individuals, the protection of the public's health, the severity of the public health threat, and the availability of necessary witnesses and evidence.

(f) The court shall grant the petition if it finds that there is clear, cogent, and convincing evidence that isolation or quarantine is necessary to prevent a serious and imminent risk to the health and safety of others.

(g) A court order authorizing continued isolation or quarantine as a result of a hearing shall:

(i) Specify a maximum duration for isolation or quarantine not to exceed thirty days;

(ii) Identify the isolated or quarantined persons or groups by name or shared or similar characteristics or circumstances;

(iii) Specify factual findings warranting isolation or quarantine pursuant to this section;

(iv) Include any conditions necessary to ensure that isolation or quarantine is carried out within the stated purposes and restrictions of this section;

(v) Specify the premises where isolation or quarantine will take place; and

(vi) Be served on all affected persons or groups in accordance with the rules of civil procedure.

(6) Prior to the expiration of a court order for continued detention issued pursuant to subsection (5) of this section, the local health officer may petition the superior court to continue isolation or quarantine provided:

(a) The court finds there is a reasonable basis to require continued isolation or quarantine to prevent a serious and imminent threat to the health and safety of others.

(b) The order shall be for a period not to exceed thirty days.

(7) State statutes, rules, and state and federal emergency declarations governing procedures for detention, examination, counseling, testing, treatment, vaccination, isolation, or quarantine for specified health emergencies or specified communicable diseases, including, but not limited to, tuberculosis and HIV, shall supersede this section.

[Statutory Authority: RCW 43.20.050 (2)(d), 70.05.050, and 70.05.060. 03-05-048, § 246-100-040, filed 2/13/03, effective 2/13/03.]

WAC 246-100-045 Conditions and principles for isolation or quarantine. The local health officer shall adhere to the following conditions and principles when isolating or quarantining a person or group of persons in accordance with WAC 246-100-040:

(1) Isolation or quarantine must be by the least restrictive means necessary to prevent the spread of a communicable or possibly communicable disease to others and may include, but are not limited to, confinement to private homes or other public or private premises;

(2) Isolated individuals must be confined separately from quarantined individuals;

(3) The health status of isolated or quarantined individuals must be monitored regularly to determine if they require continued isolation or quarantine;

(4) If a quarantined individual subsequently becomes infected or is reasonably believed to have become infected with a communicable or possibly communicable disease that the local health officer believes poses a significant threat to the health and safety of other quarantined individuals, he or she must promptly be placed in isolation;

(5) Isolated or quarantined individuals must be released as soon as practicable when the local health officer determines that they have been successfully decontaminated or that they pose no substantial risk of transmitting a communicable or possibly communicable disease that would constitute a serious or imminent threat to the health and safety of others;

(6) The needs of a person isolated or quarantined must be addressed to the greatest extent possible in a systematic and competent fashion, including, but not limited to, providing adequate food, clothing, shelter, means of communication with those in isolation or quarantine and outside these settings, medication, and competent medical care;

(7) Premises used for isolation or quarantine must be maintained in a safe and hygienic manner to minimize the likelihood of further transmission of infection or other harm to persons isolated and quarantined;

(8) To the extent possible, cultural and religious beliefs should be considered in addressing the needs of individuals, and establishing and maintaining isolation or quarantine premises;

(9) Isolation or quarantine shall not abridge the right of any person to rely exclusively on spiritual means alone through prayer to treat a communicable or possibly communicable disease in accordance with religious tenets and practices, nor shall anything in this chapter be deemed to prohibit a person so relying who is infected with a contagious or communicable disease from being isolated or quarantined in a private place of his or her own choice, provided, it is approved by the local health officer, and all laws, rules and regulations governing control, sanitation, isolation and quarantine are complied with. At his or her sole discretion, the local health officer may isolate infected individuals declining treatment for the duration of their communicable infection.

[Statutory Authority: RCW 43.20.050 (2)(d), 70.05.050, and 70.05.060. 03-05-048, § 246-100-045, filed 2/13/03, effective 2/13/03.]

WAC 246-100-050 Isolation or quarantine premises. (1) Entry into isolation or quarantine premises shall be restricted under the following conditions:

(a) The local health officer may authorize physicians, health care workers, or others access to individuals in isolation or quarantine pursuant to WAC 246-100-040 as necessary to meet the needs of isolated or quarantined individuals;

(b) No person, other than a person authorized by the local health officer, shall enter isolation or quarantine premises;

(c) Any person entering isolation or quarantine premises shall be provided with infection control training and may be

required to wear personal protective equipment or receive vaccination as appropriate;

(d) Any person entering isolation or quarantine premises with or without authorization of the local health officer may be isolated or quarantined.

(2) Persons subject to isolation or quarantine and persons entering isolation or quarantine premises shall obey the rules established by the state board of health and the orders of the local health officer, and failure to do so shall constitute a misdemeanor consistent with the provisions of RCW 43.20.050(4) and 70.05.120.

[Statutory Authority: RCW 43.20.050 (2)(d), 70.05.050, and 70.05.060. 03-05-048, § 246-100-050, filed 2/13/03, effective 2/13/03.]

WAC 246-100-055 Relief from isolation or quarantine. Any person or group of persons isolated or quarantined pursuant to this chapter may seek relief from the superior court.

(1) Any person or group of persons detained by order of a local health officer pursuant to WAC 246-100-040(3) may apply to the court for an order to show cause why the individual or group should not be released.

(a) The court shall rule on the application to show cause within forty-eight hours of its filing.

(b) If the court grants the application, the court shall schedule a hearing on the order to show cause as soon as practicable.

(c) The issuance of an order to show cause shall not stay or enjoin an isolation or quarantine order.

(2) An individual or group isolated or quarantined may request a hearing in the court for remedies regarding breaches to the conditions of isolation or quarantine required by WAC 246-100-045.

(3) A request for a hearing shall not stay or enjoin an isolation or quarantine order.

(4) Upon receipt of a request under this subsection alleging extraordinary circumstances justifying the immediate granting of relief, the court shall fix a date for hearing on the matters alleged as soon as practicable.

(5) Otherwise, upon receipt of a request under this section, the court shall fix a date for hearing on the matters alleged within five days from receipt of the request.

(6) In any proceedings brought for relief under this subsection, in extraordinary circumstances and for good cause shown, the local health authority may move the court to extend the time for a hearing, which extension the court in its discretion may grant giving due regard to the rights of the affected individuals, the protection of the public's health, the severity of the emergency and the availability of necessary witnesses and evidence.

(7) Any hearings for relief under this section involving a petitioner or petitioners judged to be contagious for a communicable disease will be conducted in a manner that utilizes appropriate infection control precautions and minimizes the risk of disease transmission.

[Statutory Authority: RCW 43.20.050 (2)(d), 70.05.050, and 70.05.060. 03-05-048, § 246-100-055, filed 2/13/03, effective 2/13/03.]

WAC 246-100-060 Right to counsel. A person or group of persons isolated or quarantined pursuant to WAC 246-100-040 has a right to be represented by counsel if they so elect. If such person or group requests counsel and cannot afford counsel, the court shall appoint counsel consistent with the provisions of chapter 10.101 RCW. The local health officer must provide adequate means of communication between such persons or groups and their counsel.

[Statutory Authority: RCW 43.20.050 (2)(d), 70.05.050, and 70.05.060. 03-05-048, § 246-100-060, filed 2/13/03, effective 2/13/03.]

WAC 246-100-065 Consolidation. In any proceedings brought pursuant to this chapter, to promote the fair and efficient operation of justice and having given due regard to the rights of affected persons, the severity of the threat to the public's health, and the availability of necessary witnesses and evidence, the court may order the consolidation of individual claims into group claims where:

(1) The number of individuals involved or to be affected is so large as to render individual participation impractical;

(2) There are questions of law or fact common to the individual claims or rights to be determined;

(3) The group claims or rights to be determined are typical of the affected persons' claims or rights; and

(4) The entire group will be adequately represented in the consolidation.

[Statutory Authority: RCW 43.20.050 (2)(d), 70.05.050, and 70.05.060. 03-05-048, § 246-100-065, filed 2/13/03, effective 2/13/03.]

WAC 246-100-070 Enforcement of local health officer orders. (1) An order issued by a local health officer in accordance with this chapter shall constitute the duly authorized application of lawful rules adopted by the state board of health and must be enforced by all police officers, sheriffs, constables, and all other officers and employees of any political subdivisions within the jurisdiction of the health department in accordance with RCW 43.20.050.

(2) Any person who shall violate any of the provisions of this chapter or any lawful rule adopted by the board shall be deemed guilty of a misdemeanor punishable as provided under RCW 43.20.050.

(3) Any person who shall fail or refuse to obey any lawful order issued by any local health officer shall be deemed guilty of a misdemeanor punishable as provided under RCW 70.05.120.

[Statutory Authority: RCW 43.20.050 (2)(d), 70.05.050, and 70.05.060. 03-05-048, § 246-100-070, filed 2/13/03, effective 2/13/03.]

WAC 246-100-072 Rules for notification of partners at risk of HIV infection. (1) A local health officer or authorized representative shall:

(a) Within seven days of receipt of a report indicative of a previously unreported case of HIV infection, contact the principal health care provider to determine the best means and the necessity of conducting a partner notification case investigation; and

(b) Contact the HIV-infected person for the purpose of providing assistance in notifying sex or injection equipment-sharing partners, including spouses, that they may have been exposed to and infected with HIV and that they should seek HIV pretest counseling and HIV testing, unless:

(i) The principal health care provider recommends that the state or local health officer not meet with the HIV-

infected individual for the purpose of notifying partners, including spouses; or

(ii) The local health officer determines a partner notification case investigation is not necessary;

(c) Provide assistance notifying partners in accordance with the "*HIV Partner Counseling and Referral Services—Guidance*" as published by the Centers for Disease Control and Prevention, December 1998.

(2) If the local health officer decides to conduct the partner notification case investigation, the principal health care provider:

(a) May provide recommendations to the state or local health officer on the best means of contacting the HIV-infected individual for the purpose of notifying sex or injection equipment-sharing partners, including spouses, that partners may have been exposed to and infected with HIV and that partners should seek HIV pretest counseling and HIV testing; and

(b) Shall inform the HIV-infected person that the local health officer or authorized representative will contact the HIV-infected person for the purpose of providing assistance with the notification of partners.

(3) If the principal health care provider recommends that the state or local health officer not meet with the HIV-infected individual for the purpose of notifying partners, including spouses, the principal health care provider shall:

(a) Inform the HIV-infected individual of the necessity to notify sex and injection equipment-sharing partners, including spouses, that they have been exposed to and may be infected with HIV and should seek HIV testing; and

(b) Provide assistance notifying partners in accordance with the "*HIV Partner Counseling and Referral Services—Guidance*" as published by the Centers for Disease Control and Prevention, December 1998; and

(c) Inform the local health officer or an authorized representative of the identity of sex or injection equipment-sharing partners known to the provider when the HIV-infected individual either refuses or is unable to notify such partners and confirm notification to the health care provider; and

(d) Upon request of the state or local health officer, report the number of exposed partners, including spouses that have been contacted and offered HIV testing.

(4) A health care provider shall not disclose the identity of an HIV-infected individual or the identity of sex and injection equipment-sharing partners, including spouses, at risk of HIV infection, except as authorized in RCW 70.24.105 or WAC 246-100-072.

(5) Local health officers and authorized representatives shall:

(a) Use identifying information, provided according to this section, on HIV-infected individuals only for:

(i) Contacting the HIV-infected individual to provide post-test counseling or to contact sex and injection equipment-sharing partners, including spouses; or

(ii) Carrying out an investigation of conduct endangering the public health or of behaviors presenting an imminent danger to the public health pursuant to RCW 70.24.022 or 70.24.024; and

(b) Destroy documentation of referral information established under this subsection, containing identities and identifying information on the HIV-infected individual and at-risk partners of that individual, immediately after notifying partners or within three months of the date information was received, whichever occurs first unless such documentation is being used in an active investigation of conduct endangering the public health or of behaviors presenting an imminent danger to the public health pursuant to RCW 70.24.022 or 70.24.024.

(6) A health care provider may consult with the local health officer or an authorized representative about an HIV-infected individual and the need for notification of partners at any time.

[Statutory Authority: RCW 70.24.130 and 70.24.380. 05-11-110, § 246-100-072, filed 5/18/05, effective 6/18/05. Statutory Authority: RCW 70.24.-125 and 70.24.130. 99-17-077, § 246-100-072, filed 8/13/99, effective 9/1/99. Statutory Authority: RCW 70.24.022, [70.24].340 and Public Law 104-146. 97-15-099, § 246-100-072, filed 7/21/97, effective 7/21/97. Statutory Authority: RCW 43.20.050 and 70.24.130. 92-02-019 (Order 225B), § 246-100-072, filed 12/23/91, effective 1/23/92. Statutory Authority: RCW 43.20.050. 91-02-051 (Order 124B), recodified as § 246-100-072, filed 12/27/90, effective 1/31/91. Statutory Authority: Chapter 70.24 RCW. 89-02-008 (Order 324), § 248-100-072, filed 12/27/88.]

WAC 246-100-186 Special settings—Health care facilities. Health care facilities shall:

(1) Adopt written policy and procedures restricting work of employees, staff, students, and volunteers diagnosed to have a communicable disease from direct contact with patients, residents, and recipients of care during the period of communicability when:

(a) Transmission of the disease to recipients of care or other employees can occur in that particular job environment, and

(b) The disease can cause serious illness.

(2) Permit employees, staff, students, and volunteers to return to work when measures have been taken to prevent transmission of disease if:

(a) Measures are consistent with recommendations of an infection control committee or equivalent authorized group if existing, and

(b) Measures are consistent with recommendations of local health officer.

(3) Comply with applicable state licensure law and department rules regarding communicable disease screening and control.

[Statutory Authority: RCW 43.20.050. 91-02-051 (Order 124B), recodified as § 246-100-186, filed 12/27/90, effective 1/31/91; 88-07-063 (Order 308), § 248-100-186, filed 3/16/88.]

WAC 246-100-191 Animals, birds, pets—Measures to prevent human disease. (1) All persons and entities are prohibited from:

(a) Sale of milk, meat, hides, and hair from animals infected with anthrax; and

(b) Sale and display of turtles except as permitted under Title 21 CFR, Food and Drug Administration, part 1240.62, 1986.

(2) Except for bonafide public or private zoological parks, persons and entities are prohibited from:

(a) Importing into Washington state any bat, skunk, fox, raccoon, or coyote without a permit from the director of the Washington state department of agriculture, as required in WAC 16-54-125; and

(b) Acquiring, selling, bartering, exchanging, giving, purchasing, or trapping for retention as pets or for export any:

(i) Bat,

(ii) Skunk,

(iii) Fox,

(iv) Raccoon, and

(v) Coyote.

(3) Local health officers shall determine whether or not to order the destroying or testing of animals other than cats and dogs if:

(a) The animal has bitten or otherwise exposed a person, and

(b) Rabies is suspected.

(4) When an animal has bitten or otherwise exposed a person, the local health officer shall institute any or all of the following as judged appropriate:

(a) Order testing and destruction of the animal,

(b) Order restriction of dogs and cats for ten days observation,

(c) Require examination and recommendation by a veterinarian related to signs of rabies, or

(d) Specify other appropriate actions for animals considered low risk for rabies.

(5) When an animal other than a bat is found to be rabid, the local health officer shall immediately institute a community-wide rabies control program including:

(a) Issuance of orders to pick up and impound all stray and unlicensed dogs and cats,

(b) Issuance of orders to owners of dogs and cats requiring proof of rabies vaccination of animals by a veterinarian within six previous months,

(c) Restriction of household mammals to owners' premises except when on a leash, or

(d) Institute actions other than subsection (5)(a), (b), and (c) of this section when judged appropriate.

(6) A person destroying an animal as described in this section shall:

(a) Avoid damaging the brain; and

(b) Transport the dead animal's head, brain, or body in a manner approved by the local health department.

(7) To improve surveillance for rabies, laboratories shall inform the local health officer prior to testing specimens and samples for rabies.

(8) When a cat or dog has been bitten or exposed to a rabid or suspected rabid animal, the local health officer shall require:

(a) Destruction of the exposed animal; or

(b) Revaccination, if currently vaccinated, including observation by owner for ninety days; or

(c) If not currently vaccinated, vaccination and strict isolation for six months with revaccination one month prior to release from isolation; or

(d) Any other action judged appropriate by the local health officer.

(9) A person importing a dog and/or a cat into Washington state shall comply with WAC 16-54-120.

[Statutory Authority: RCW 43.20.050. 91-02-051 (Order 124B), recodified as § 246-100-191, filed 12/27/90, effective 1/31/91; 88-07-063 (Order 308), § 248-100-191, filed 3/16/88.]

WAC 246-100-201 Birds—Measures to prevent psittacosis. (1) Definitions specific to this section:

(a) "Breeder" means a person or persons propagating birds for purpose of sale, trade, gift, or display;

(b) "Displayer" means a person, owner, or entity other than a public or private zoological park showing, exhibiting, or allowing a person or persons to handle or access a bird in a place open to the public or in a health care facility;

(c) "Leg band" means a smooth plastic or metal cylinder, either open (seamed) or closed (seamless), designed to be used to encircle a leg of a bird including permanent inscription of identification indicating:

(i) Code for individual bird, and

(ii) Code for breeder source except when open bands identify vendor rather than breeder.

(d) "Psittacine bird" or "bird" means all birds commonly known as:

(i) Parrots,

(ii) Macaws,

(iii) Cockatoos,

(iv) Lovebirds,

(v) Parakeets, and

(vi) All other birds of the order psittaciformes.

(e) "Vendor" means a person or entity selling, trading, or giving a bird to another person or entity.

(2) A person selling, trading, or otherwise transferring a bird shall identify each bird by:

(a) A coded and closed (seamless) leg band;

(b) A United States department of agriculture open (seamed) leg band; or

(c) An open (seamed) leg band only in cases where an original and closed (seamless) leg band was lost or required replacement due to injury or potential injury to the bird.

(3) A vendor transferring a bird to other than the general public shall maintain a record of transfer including acquisition, sales, and trade of a bird, for at least one year and including:

(a) Date of transaction;

(b) Name and address of the recipient and source;

(c) Number and type, including the common name of the bird transferred; and

(d) Leg band codes, including breeder or vendor and individual bird codes, omitting individual bird code only upon initial transfer of a bird propagated by the breeder.

(4) A vendor transferring a bird to the general public shall provide each buyer or recipient with:

(a) A sales slip or written document including all information required in subsection (3)(a), (b), (c), and (d) of this section; and

(b) A written warning or caution notice including:

(i) Information about possible human infection or disease caused by birds, especially psittacosis, parrot fever, and ornithosis;

(ii) Signs of infection or a sick bird including:

(A) Nasal discharge,

(B) Sneezing,

(C) Coughing,

(D) Ruffled feathers,

(E) Lethargy, and

(F) Diarrhea.

(iii) Signs and symptoms of an illness in a human including, but not limited to:

(A) Chills,

(B) Fever,

(C) Headache,

(D) Cough, and

(E) Muscle aches.

(iv) Information that nasal discharge and droppings of an infected or sick bird may cause illness in humans; and

(v) Advice to consult veterinarian or health care provider, as appropriate, if signs or symptoms occur.

(5) A vendor shall post a readable sign in a public area with a warning described in subsection (4)(b) of this section.

(6) When investigation of a human case of psittacosis indicates probable infection from a bird, the local health officer shall:

(a) Order collection of blood or other appropriate samples from the suspect bird or birds for appropriate laboratory tests to rule out disease; or

(b) Use protocols established in *Communicable Diseases Manual*, seventeenth edition, James Chin, MD, MPH, editor, 2000. A copy of this publication is available for review at the department and at each local health department; and

(c) Have authority to enforce requirements of this section on a nonpsittacine bird or birds when:

(i) There is suspected exposure to an infected bird, or

(ii) There is evidence a bird caused a disease.

(7) When a local health officer orders a quarantine of a bird or birds, the vendor shall:

(a) Cooperate with the local health officer, and

(b) Assume costs associated with action.

(8) Upon confirmation of psittacosis, vendors shall follow directions issued by the local health officer to:

(a) Place the birds under antibiotic treatment with environmental cleaning and sanitizing; or

(b) Destroy all birds on the premises followed by environmental cleaning and sanitizing; and

(c) Assume costs associated with psittacosis prevention and control action ordered by local and state health officer;

(d) Prohibit sale or addition of birds to inventory; and

(e) Prevent contact of any bird with the public.

(9) A person exhibiting or displaying a bird or birds in a place or area used or occupied by the public shall exhibit the bird or birds in a manner preventing human exposure to the birds and bird discharges except:

(a) In single-purpose pet shops and aviaries, and

(b) At bird shows if:

(i) A room containing a bird or birds is separated from other areas and activities, and

(ii) The room entrance has a sign warning a person about potential exposure to psittacosis.

(10) Shipment and embargo of birds.

(a) Any person or entity receiving a psittacine bird or birds from points outside Washington state shall:

(i) Comply with Title 9 CFR, parts 92.3 and 92.8(b);

(ii) Refuse receipt of any bird originating from premises where psittacosis infection is suspected or known; and

(iii) Refuse receipt of any bird from a premise quarantined for psittacosis.

(b) The state health officer is authorized to:

(i) Order placement and removal of an embargo upon shipment of a live bird or birds into Washington state, and

(ii) Order any action necessary to control an outbreak or potential outbreak of psittacosis in Washington state.

[Statutory Authority: RCW 43.20.050. 00-23-120, § 246-100-201, filed 11/22/00, effective 12/23/00; 92-02-019 (Order 225B), § 246-100-201, filed 12/23/91, effective 1/23/92; 91-02-051 (Order 124B), recodified as § 246-100-201, filed 12/27/90, effective 1/31/91; 88-07-063 (Order 308), § 248-100-201, filed 3/16/88.]

WAC 246-100-202 Special diseases—Sexually transmitted diseases—Duties and authorities. (1) Health care providers shall:

(a) Report each case of sexually transmitted disease as required in chapter 246-101 WAC; and

(b) At each medical encounter, when providing treatment for an infectious sexually transmitted disease, provide instruction, appropriate to each patient regarding:

(i) Communicability of the disease; and

(ii) Requirements to refrain from acts that may transmit the disease to another; and

(c) Ensure completion of a prenatal serologic test for syphilis in each pregnant woman pursuant to RCW 70.24.090 including:

(i) Submitting a blood sample for syphilis to a laboratory approved to perform prenatal serologic tests for syphilis, as required in RCW 70.24.090, at the time of the first prenatal visit; and

(ii) Deciding whether or not to omit the serologic test for syphilis if the test was performed elsewhere during the current pregnancy; and

(d) When diagnosing or caring for a patient with gonococcal or chlamydial ophthalmia neonatorum, reporting the case to the local health officer or local health department in accordance with the provisions of chapter 246-101 WAC; and

(e) When attending or assisting in the birth of any infant or caring for an infant after birth, ensure instillation of a department-approved prophylactic ophthalmic agent into the conjunctival sacs of the infant within the time frame established by the department in policy statement of ophthalmia agents approved for the prevention of ophthalmia neonatorum in the newborn, issued June 19, 1981.

(2) Laboratories, health care providers, and other persons shall deny issuance of a certificate or statement implying an individual is free from sexually transmitted disease.

(3) State and local health officers or their authorized representatives shall have authority to conduct or cause to be conducted an interview and investigation of persons infected or reasonably believed to be infected with a sexually transmitted disease.

(a) For the purpose of this section, "reasonable belief" and "reasonably believed" shall mean a health officer's belief based upon a credible report from an identifiable individual indicating another person is likely to have a sexually transmitted disease (STD) or to have been exposed to a STD;

(b) Investigations shall be conducted using procedures and measures described in WAC 246-100-036(4).

(4) Local health officers, health care providers, and others shall comply with the provisions in chapter 70.24 RCW,

in addition to requirements in chapters 246-100 and 246-101 WAC.

(5) Any person who violates a rule adopted by the board for the control and treatment of a sexually transmitted disease is subject to penalty under RCW 70.24.080.

[Statutory Authority: RCW 70.24.130 and 70.24.380. 05-11-110, § 246-100-202, filed 5/18/05, effective 6/18/05.]

WAC 246-100-203 Special diseases—Sexually transmitted diseases—Health officer orders. (1) A state or local health officer within his or her jurisdiction may, in accordance with RCW 70.24.024, issue orders for medical examination, testing, and/or counseling, as well as orders to cease and desist specific activities, when he or she knows or has reason to believe that a person has a sexually transmitted disease and is engaging in conduct endangering the public health.

(a) For purposes of this section, "reason to believe" means a health officer's belief that is based on:

(i) Laboratory test results confirming or suggestive of a STD; or

(ii) A health care provider's direct observation of clinical signs confirming an individual has or is likely to have a STD; or

(iii) Information obtained directly from an individual infected with a STD about the identity of his or her sexual or needle-sharing contacts when:

(A) Contact with the infected individual occurred during a period when the disease may have been infectious; and

(B) The contact was sufficient to transmit the disease; and

(C) The infected individual is, in the health officer's judgment, credible and believable.

(b) "Conduct endangering the public health" for the purposes of RCW 70.24.024 and this section, means:

(i) Anal, oral, or vaginal intercourse for all sexually transmitted diseases;

(ii) For HIV and Hepatitis B:

(A) Anal, oral, or vaginal intercourse; and/or

(B) Sharing of injection equipment; and/or

(C) Donating or selling blood, blood products, body tissues, or semen; and

(iii) Activities described in (b)(i) and (ii) of this subsection resulting in introduction of blood, semen, and/or vaginal fluids to:

(A) Mucous membranes;

(B) Eyes;

(C) Open cuts, wounds, lesions; or

(D) Interruption of epidermis.

(c) State and local health officers and their authorized representatives shall have authority to issue written orders for medical examination, testing, and/or counseling under chapter 70.24 RCW, only after:

(i) All other efforts to protect public health have failed, including reasonable efforts to obtain the voluntary cooperation of the person to be affected by the order; and

(ii) They have sufficient evidence to "reasonably believe" the individual to be affected by the order:

(A) Has a sexually transmitted disease; and

(B) Is engaging in "conduct endangering public health"; and

(iii) They have investigated and confirmed the existence of "conduct endangering the public health" by:

(A) Interviewing sources to assess their credibility and accuracy; and

(B) Interviewing the person to be affected by the order; and

(iv) They have incorporated all information required in RCW 70.24.024 in a written order.

(d) State and local health officers and their authorized representatives shall have authority to issue written orders for treatment under RCW 70.24.022 only after laboratory test results or direct observation of clinical signs or assessment of clinical data by a physician confirm the individual has, or is likely to have, a sexually transmitted disease.

(e) State and local health officers and their authorized representatives shall have authority to issue written orders to cease and desist from specified activities under RCW 70.24.-024 only after:

(i) They have determined the person to be affected by the order is engaging in "conduct endangering public health"; and

(ii) Laboratory test results, or direct observation of clinical signs or assessment of clinical data by a physician, confirm the individual has, or is likely to have, a sexually transmitted disease; and

(iii) They have exhausted procedures described in subsection (8)(a) of this section; and

(iv) They have enlisted, if appropriate, court enforcement of the orders described in (c) and (d) of this subsection.

(f) Written orders to cease and desist from specified activities shall be for an initial period of time not to exceed three months, and may be renewed by the health officer for periods of time not to exceed three months provided all requirements of RCW 70.24.024 regarding notification, confidentiality, right to a judicial hearing, and right to counsel are met again at the time of renewal.

(2) A state or local health officer within his or her jurisdiction may, in accordance with RCW 70.24.034, bring action in superior court to detain a person in a designated or approved facility when he or she knows or has reason to believe that person has a sexually transmitted disease and continues to engage in behaviors that present an imminent danger to the public health.

(a) "Behaviors that present an imminent danger to public health" or "BPID" for the purposes of detention in accordance with RCW 70.24.034 and this section means the following activities, under conditions specified below, performed by an individual with a laboratory-confirmed HIV infection:

(i) Anal or vaginal intercourse without a latex condom; or

(ii) Shared use of blood-contaminated injection equipment;

(iii) Donating or selling HIV-infected blood, blood products, or semen; and

(iv) Activities described in (a)(i) and (ii) of this subsection constitute BPID only if:

(A) The infected individual received post-test counseling as described in WAC 246-100-209 prior to repeating activities; and

(B) The infected individual did not inform the persons with whom the activities occurred of his or her infectious status.

(b) State and local health officers and their authorized representatives shall have authority to seek court orders for detainment under RCW 70.24.034 only for persons infected with HIV and only after:

(i) Exhausting procedures described in subsection (1) of this section; and

(ii) Enlisting, if appropriate, court enforcement of orders to cease and desist; and

(iii) Having sufficient evidence to "reasonably believe" the person is engaging in BPID.

(c) A local health officer may notify the state health officer if he or she determines:

(i) The criteria for BPID are met by an individual; and

(ii) Such individual fails to comply with a cease and desist order affirmed or issued by a court.

(d) A local or state health officer may request the prosecuting attorney to file an action in superior court to detain an individual specified in this subsection. The requesting local or state health officer or authorized representative shall:

(i) Notify the department prior to recommending the detainment setting where the individualized counseling and education plan may be carried out consistent with subsection (9)(d), (e), and (f) of this section;

(ii) Make a recommendation to the court for placement of such individual consistent with (e), (f), and (g) of this subsection; and

(iii) Provide to the court an individualized plan for education and counseling consistent with (f) of this subsection.

(e) State board of health requirements for detainment of individuals demonstrating BPID include:

(i) Sufficient number of staff, caregivers, and/or family members to:

(A) Provide round-the-clock supervision, safety of detainee, and security; and

(B) Limit and restrict activities to prevent BPID; and

(C) Make available any medical, psychological, or nursing care when needed; and

(D) Provide access to AIDS education and counseling; and

(E) Immediately notify the local or state health officer of unauthorized absence or elopement; and

(ii) Sufficient equipment and facilities to provide:

(A) Meals and nourishment to meet nutritional needs; and

(B) A sanitary toilet and lavatory; and

(C) A bathing facility; and

(D) Bed and clean bedding appropriate to size of detainee; and

(E) A safe detention setting appropriate to chronological and developmental age of detainee; and

(F) A private sleeping room; and

(G) Prevention of sexual exploitation;

(iii) Sufficient access to services and programs directed toward cessation of BPID and providing:

(A) Linguistically, socially, culturally, and developmentally appropriate ongoing AIDS education and counseling; and

(B) Psychological and psychiatric evaluation and counseling; and

(C) Implementation of court-ordered plan for individualized counseling and education consistent with (g) of this subsection;

(iv) If required, provide access to isolation and/or restraint in accordance with restraint and seclusion rules in WAC 275-55-263 (2)(c);

(v) Maintain a safe, secure environment free from harassment, physical danger, and sexual exploitation.

(f) Washington state board of health standards for an individualized counseling and education plan for a detainee:

(i) Consideration of detainee's personal and environmental characteristics, culture, social group, developmental age, and language;

(ii) Identification of habitual and addictive behavior and relapse pattern;

(iii) Identification of unique risk factors and possible cross-addiction leading to behavior presenting imminent danger to public health;

(iv) Identification of obstacles to behavior change and determination of specific objectives for desired behavior;

(v) Provision of information about acquisition and transmission of HIV infection;

(vi) Teaching and training of individual coping skills to prevent relapse to BPID;

(vii) Specific counseling for chemical dependency, if required;

(viii) Identification of and assistance with access to community resources, including social services and self-help groups appropriate to provide ongoing support and maintenance of behavior change; and

(ix) Designation of a person primarily responsible for counseling and/or education who:

(A) Completed pretest and post-test counselor training approved by the office on AIDS; and

(B) Received training, as approved by the office on AIDS, focused on facilitating behavior change related to preventing BPID; and

(C) Has a postgraduate degree in social work, psychology, counseling, psychosocial nursing, or other allied profession; and

(D) Completed at least one year clinical experience after postgraduate education with a primary focus on individualized behavior change; and

(E) Is a certified counselor under chapter 18.19 RCW;

(x) Designation and provision of a qualified counselor under WAC 275-19-145 when the detainee is assessed to have a drug or alcohol problem.

(g) The state board of health designates the following settings appropriate for detainment provided a setting meets requirements in (e)(i), (ii), (iii), (iv), and (v) of this subsection:

(i) Homes, care facilities, or treatment institutions operated or contracted by the department;

(ii) Private homes, as recommended by the local or state health officer;

(iii) Boarding homes licensed under chapter 18.20 RCW;

(iv) Nursing homes licensed under chapter 18.51 RCW;

(v) Facilities licensed under chapter 71.12 RCW, including:

(A) Psychiatric hospitals, per chapter 246-322 WAC;

(B) Alcoholism treatment centers if certified for substance use under chapter 275-19 WAC;

(C) Adult residential rehabilitation centers, per chapter 246-325 WAC;

(D) Private adult treatment homes, per chapter 246-325 WAC;

(E) Residential treatment facilities for psychiatrically impaired children and youth, per chapter 246-323 WAC;

(vi) A hospital licensed under chapter 70.41 RCW.

[Statutory Authority: RCW 70.24.130 and 70.24.380. 05-11-110, § 246-100-203, filed 5/18/05, effective 6/18/05.]

WAC 246-100-204 Special diseases—Human immunodeficiency virus (HIV)—Absence of HIV as an occupational qualification. For the purpose of RCW 49.60.172 concerning the absence of HIV infection as a bona fide occupational qualification only, "significant risk" means a job qualification which requires person-to-person contact likely to result in direct introduction of blood into the eye, an open cut or wound, or other interruption of the epidermis, when:

(1) No adequate barrier protection is practical; and

(2) Determined only on case-by-case basis consistent with RCW 49.60.180.

[Statutory Authority: RCW 70.24.130 and 70.24.380. 05-11-110, § 246-100-204, filed 5/18/05, effective 6/18/05.]

WAC 246-100-205 Special diseases—HIV—Testing and counseling following occupational exposure. A person who has experienced a substantial exposure to another person's bodily fluids in a manner that presents a possible risk of transmission of HIV, and who is exposed while engaged in a category of employment determined to be at risk of substantial exposure to HIV, may ask a state or local health officer to order pretest counseling, HIV testing, and post-test counseling of the person who was the source of the bodily fluids in accordance with RCW 70.24.340.

(1) Substantial exposure that presents a possible risk of transmission shall be limited to:

(a) A physical assault upon the exposed person involving blood or semen;

(b) Intentional, unauthorized, nonconsensual use of needles or sharp implements to inject or mutilate the exposed person; or

(c) An accidental parenteral or mucous membrane or nonintact skin exposure to blood, semen, or vaginal fluids.

(2) The alleged exposure must have occurred on the job while the individual was employed or acting as an authorized volunteer in one of the following employment categories that are at risk of substantial exposure to HIV:

(a) Law enforcement officer;

(b) Fire fighter;

(c) Health care provider;

(d) Staff of health care facilities;

(e) Funeral director; or

(f) Embalmer.

(3) The health officer shall:

(a) Determine that the alleged exposure meets the criteria established in this section for substantial exposure that presents a possible risk of transmission; and

(b) Ensure that pretest counseling of the individual to be tested, or a legal representative, occurs; and

(c) Arrange for testing of the individual who is the source of the exposure to occur within seven days of the request from the person exposed; and

(d) Ensure that records on HIV testing ordered by a health officer are maintained only by the ordering health officer.

(4) The health officer, as a precondition for ordering counseling and testing of the person who was the source of the bodily fluids, may require that the exposed individual agree to be tested for HIV if such testing is determined appropriate by the health officer.

(5) This section does not apply to the department of corrections or to inmates in its custody or subject to its jurisdiction.

[Statutory Authority: RCW 70.24.130 and 70.24.380. 05-11-110, § 246-100-205, filed 5/18/05, effective 6/18/05.]

WAC 246-100-206 Special diseases—HIV—Testing and counseling of jail detainees. Jail administrators, with the approval of the local public health officer, may order pretest counseling, HIV testing and post-test counseling of a jail detainee in accordance with RCW 70.24.360, provided that the local public health officer determines that the detainee's actual or threatened behavior presents a possible risk to the staff, general public, or other persons.

(1) Actual behaviors present a possible risk if they result in "exposure presenting a possible risk" and involve one of the following actions:

(a) Anal, oral, or vaginal intercourse excluding conjugal visits; or

(b) Physical assault; or

(c) Sharing of injection equipment or sharp implements; or

(d) Throwing or smearing of blood, semen, or vaginal fluids; or

(2) Threatened behaviors present a "possible risk" if:

(a) The threatening individual states he or she is infected with HIV; and

(b) The threatened behavior is listed in subsection (1)(a), (b), (c), or (d) of this section; and

(c) The threatened behavior could result in "exposure presenting a possible risk."

(3) For purposes of subsections (1) and (2) of this section, "exposure presenting possible risk" means one or more of the following:

(a) Introduction of blood, semen, or vaginal fluids into:

(i) A body orifice or a mucous membrane;

(ii) The eye; or

(iii) An open cut, wound, lesion, or other interruption of the epidermis.

(b) A needle puncture or penetrating wound resulting in exposure to blood, semen, and/or vaginal fluids.

(4) Jail administrators may order pretest counseling, post-test counseling, and HIV testing only under the following conditions:

(a) The jail administrator documents and reports to the local health officer, within seven days after the incident, any incident perceived to be actual or threatened "behaviors presenting possible risk"; and

(b) The local health officer:

(i) Determines the documented behavior or behaviors meet the criteria established in this section for behaviors presenting a "possible risk"; and

(ii) Interviews the detained individual to evaluate the factual basis for alleged actual or threatened behavior; and

(iii) Makes a fact determination, based upon the documented behavior, the interview with the detained individual, and/or independent investigation, that sufficient factual evidence exists to support the allegation of actual or threatened "behaviors presenting possible risk"; and

(iv) Arranges for testing of the individual who is the source of the behavior to occur within seven days of the request from the jail administrator; and

(v) Reviews with the detained individual who is the source of the behavior the documentation of the actual or threatened behavior to try to assure understanding of the basis for HIV testing; and

(vi) Provides written approval of the jail administrator's order prior to HIV testing.

(c) The jail administrator maintains HIV test results and identity of the tested individual as a confidential, nondisclosable record, as provided in RCW 70.24.105.

[Statutory Authority: RCW 70.24.130 and 70.24.380. 05-11-110, § 246-100-206, filed 5/18/05, effective 6/18/05. Statutory Authority: RCW 70.24.380. 02-12-106, § 246-100-206, filed 6/5/02, effective 7/6/02. Statutory Authority: RCW 70.24.125 and 70.24.130. 99-17-077, § 246-100-206, filed 8/13/99, effective 9/1/99. Statutory Authority: RCW 70.24.022, [70.24].340 and Public Law 104-146. 97-15-099, § 246-100-206, filed 7/21/97, effective 7/21/97. Statutory Authority: RCW 43.20.050 and 70.24.130. 92-02-019 (Order 225B), § 246-100-206, filed 12/23/91, effective 1/23/92. Statutory Authority: RCW 43.20.050. 91-02-051 (Order 124B), recodified as § 246-100-206, filed 12/27/90, effective 1/31/91. Statutory Authority: Chapter 70.24 RCW. 89-07-095 (Order 325), § 248-100-206, filed 3/22/89; 88-21-093 (Order 322), § 248-100-206, filed 10/19/88; 88-17-056 (Order 316), § 248-100-206, filed 8/17/88. Statutory Authority: RCW 43.20.050. 87-11-047 (Order 302), § 248-100-206, filed 5/19/87.]

WAC 246-100-207 Human immunodeficiency virus (HIV) testing—Ordering—Laboratory screening—Interpretation—Reporting. (1) Any person ordering or prescribing an HIV test for another, except for seroprevalent studies under chapter 70.24 RCW or provided under subsections (2) and (3) of this section or provided under WAC 246-100-208(1), shall:

(a) Provide a brief evaluation of both behavioral and clinical HIV risk factors; and

(b) Unless the person has been previously tested and declines receipt of information, explicitly provide verbal or written information that is culturally, linguistically, developmentally and, medically appropriate to the individual being tested regarding HIV including:

(i) The benefits of learning HIV status and the potential dangers of the disease; and

(ii) A description of ways in which HIV is transmitted and ways in which it can be prevented; and

(iii) The meaning of HIV test results and the importance of obtaining test results; and

(iv) As appropriate, the availability of anonymous HIV testing and the differences between anonymous testing and confidential testing; and

(c) Obtain or ensure explicit verbal or written informed consent of the individual to be tested prior to ordering or prescribing an HIV test, unless excepted under provisions in chapter 70.24 RCW and document the consent of the individual being tested; and

(d) Recommend and offer or refer for pretest counseling described under WAC 246-100-209 to any person requesting pretest counseling and to any person determined to be at increased risk for HIV as defined by Federal Centers for Disease Control and Prevention published in *Revised Guidelines for HIV Counseling, Testing and Referral, November 9, 2001*. The individual's decision to refuse pretest counseling is not grounds for denying HIV testing; and

(e) Provide or refer for other appropriate prevention, support or medical services, including Hepatitis services; and

(f) Provide or ensure successful completion of referral for post-test counseling described under WAC 246-100-209 if the HIV test is positive for or suggestive of HIV infection; and

(g) In the event that the individual tests positive, had a confidential test, and fails to return for post-test counseling, provide the name of the individual and locating information to the local health officer for follow-up to provide post-test counseling as required by WAC 246-100-209(2).

(2) Any person authorized to order or prescribe an HIV test for another may offer anonymous HIV testing without restriction.

(3) Blood banks, tissue banks, and others collecting or processing blood, sperm, tissues, or organs for transfusion/transplanting shall:

(a) Obtain or ensure informed specific consent of the individual prior to ordering or prescribing an HIV test, unless excepted under provisions in chapter 70.24 RCW;

(b) Explain that the reason for HIV testing is to prevent contamination of the blood supply, tissue, or organ bank donations;

(c) At the time of notification regarding a positive HIV test, provide or ensure at least one individual counseling session; and

(d) Inform the individual that the name of the individual testing positive for HIV infection will be confidentially reported to the state or local health officer.

(4) Persons subject to regulation under Title 48 RCW and requesting an insured, subscriber, or potential insured or subscriber to furnish the results of an HIV test for underwriting purposes, as a condition for obtaining or renewing coverage under an insurance contract, health care service contract, or health maintenance organization agreement shall:

(a) Before obtaining a specimen to perform an HIV test, provide written information to the individual tested explaining:

(i) What an HIV test is;

(ii) Behaviors placing a person at risk for HIV infection;

(iii) The purpose of HIV testing in this setting is to determine eligibility for coverage;

(iv) The potential risks of HIV testing; and

(v) Where to obtain HIV pretest counseling.

(b) Obtain informed specific written consent for an HIV test. The written informed consent shall include:

(i) An explanation of confidential treatment of test result reports limited to persons involved in handling or determining applications for coverage or claims for the applicant or claimant; and

(ii) That the name of the individual testing positive for HIV infection will be confidentially reported to the state or local health officer; and

(iii) Requirements under subsection (4)(c) of this section.

(c) Establish procedures to inform an applicant of the following:

(i) Post-test counseling specified under WAC 246-100-209(2) is required if an HIV test is positive or indeterminate;

(ii) Post-test counseling is done at the time any positive or indeterminate HIV test result is given to the tested individual;

(iii) The applicant is required to designate a health care provider or health care agency to whom positive or indeterminate HIV test results are to be provided for interpretation and post-test counseling; and

(iv) When an individual applicant does not identify a designated health care provider or health care agency and the applicant's HIV test results are positive or indeterminate, the insurer, health care service contractor, or health maintenance organization shall provide the test results to the state or local health department for interpretation and post-test counseling.

(5) Laboratories and other places where HIV testing is performed must demonstrate compliance with all of the requirements in the Medical test site rules, chapter 246-338 WAC.

(6) The department laboratory quality assurance section shall accept substitutions for EIA screening only as approved by the United States Food and Drug Administration (FDA) and a published list or other written FDA communication.

(7) Persons informing a tested individual of positive laboratory test results indicating HIV infection shall do so only when:

(a) The test or sequence of tests has been approved by the United States Food and Drug Administration (FDA) or the Federal Centers for Disease Control and Prevention as a confirmed positive test result; and

(b) Such information consists of relevant, pertinent facts communicated in such a way that it will be readily understood by the recipient.

(8) Persons may inform a tested individual of the unconfirmed reactive results of an FDA-approved rapid HIV test provided the test result is interpreted as preliminarily positive for HIV antibodies, and the tested person is informed that:

(a) Further testing is necessary to confirm the reactive screening test result;

(b) The meaning of reactive screening test result is explained in simple terms, avoiding technical jargon;

(c) The importance of confirmatory testing is emphasized and a return visit for confirmatory test results is scheduled; and

(d) The importance of taking precautions to prevent transmitting infection to others while awaiting results of confirmatory testing is stressed.

[Statutory Authority: RCW 70.24.130 and 70.24.380. 05-11-110, § 246-100-207, filed 5/18/05, effective 6/18/05. Statutory Authority: RCW 70.24.380. 02-12-106, § 246-100-207, filed 6/5/02, effective 7/6/02. Statutory Authority: RCW 70.24.125 and 70.24.130. 99-17-077, § 246-100-207, filed 8/13/99, effective 9/1/99. Statutory Authority: RCW 70.24.380. 97-04-041, § 246-100-207, filed 1/31/97, effective 3/3/97. Statutory Authority: RCW 43.20.050 and 70.24.130. 92-02-019 (Order 225B), § 246-100-207, filed 12/23/91, effective 1/23/92. Statutory Authority: RCW 43.20.050. 91-02-051 (Order 124B), recodified as § 246-100-207, filed 12/27/90, effective 1/31/91. Statutory Authority: Chapter 70.24 RCW and RCW 70.24.130. 89-20-006 (Order 334), § 248-100-207, filed 9/22/89, effective 10/23/89. Statutory Authority: Chapter 70.24 RCW. 89-14-003 (Order 329), § 248-100-207, filed 6/22/89; 88-17-058 (Order 318), § 248-100-207, filed 8/17/88.]

WAC 246-100-208 Counseling standard—AIDS counseling. (1) Principal health care providers shall counsel or ensure AIDS counseling for each pregnant woman continuing the pregnancy. This subsection shall not apply when health care is sought in order to terminate a pregnancy or as a result of a terminated pregnancy. "AIDS counseling" for a pregnant woman means:

(a) Performing a risk screening that includes an assessment of sexual and drug use history as part of the intake process;

(b) Providing written or verbal information on HIV infection that at a minimum includes:

(i) All pregnant women are recommended to have an HIV test;

(ii) HIV is the cause of AIDS and how HIV is transmitted;

(iii) A woman may be at risk for HIV infection, and not know it;

(iv) The efficacy of treatments to reduce vertical transmission;

(v) The availability of anonymous testing, and why confidential testing is recommended for pregnant women;

(vi) The need to report HIV infection;

(vii) Public funds are available to assist eligible HIV-infected women receive medical care and other assistance; and

(viii) Women who decline testing will not be denied care for themselves or their infants;

(c) Obtaining the informed consent of the pregnant woman, separately or as part of the consent for a battery of other routine tests provided that the woman is specifically informed in writing or verbally that a test for HIV is included;

(d) Providing HIV testing unless the pregnant woman refuses to give consent;

(e) If the pregnant woman refuses a confidential test, discussing and addressing reasons for refusal and document in the medical record that refusal and the provision of education on the benefits of HIV testing;

(f) If the risk screening indicates, providing or referring for behavioral change counseling for women who:

(i) Have or recently have had a sexual partner(s) who is known to be HIV infected or is a man who has sex with another man or is an injection drug user;

(ii) Uses or recently have used injection drugs;

(iii) Have signs or symptoms of HIV seroconversion;

(iv) Currently have or recently have exchanged sex for drugs or money or had a sexually transmitted disease or had multiple sex partners; or

(v) Express a need for further, more intensive counseling; and

(g) Basing the behavioral change counseling on the standards defined in WAC 246-100-209 and the recommendations of the federal Centers for Disease Control and Prevention published in *Revised Guidelines for HIV Counseling, Testing and Referral*, and *Revised Recommendations for HIV Screening of Pregnant Women, November 9, 2001*; and

(h) Offering referrals and providing follow-up to other necessary medical, social and HIV prevention services.

(2) Health care providers may obtain a sample brochure addressing the elements of subsection (1)(b) of this section by contacting the department of health's HIV prevention program at P.O. Box 47840, Olympia, WA 98504-7840.

(3) Principal health care providers shall counsel or ensure AIDS counseling as defined in WAC 246-100-011(2) and offer and encourage HIV testing for each patient seeking treatment of a sexually transmitted disease.

(4) Drug treatment programs under chapter 70.96A RCW shall provide or ensure provision of AIDS counseling as defined in WAC 246-100-011(2) for each person in a drug treatment program.

(5) Health care providers, persons, and organizations providing AIDS counseling in subsections (3) and (4) of this section shall:

(a) Assess the behaviors of each individual counseled for risk of acquiring and transmitting human immunodeficiency virus (HIV);

(b) Maintain a nonjudgmental environment during counseling which:

(i) Considers the individual's particular circumstances; and

(ii) Is culturally, linguistically, and developmentally appropriate to the individual being counseled.

(c) Focus counseling on behaviors increasing the risk of HIV acquisition and transmission;

(d) Offer or refer for HIV testing and provide or ensure provision of personalized risk reduction education to individuals who are determined to be at increased risk for HIV as defined by Federal Centers for Disease Control and Prevention published in *Revised Guidelines for HIV Counseling, Testing and Referral, November 9, 2001*.

(6) Persons and organizations providing AIDS counseling may provide additional or more comprehensive counseling than required in this section.

[Statutory Authority: RCW 70.24.130 and 70.24.380. 05-11-110, § 246-100-208, filed 5/18/05, effective 6/18/05. Statutory Authority: RCW 70.24.380. 02-12-106, § 246-100-208, filed 6/5/02, effective 7/6/02. Statutory Authority: RCW 70.24.125 and 70.24.130. 99-17-077, § 246-100-208, filed 8/13/99, effective 9/1/99. Statutory Authority: RCW 43.20.050 and 70.24.130. 92-02-019 (Order 225B), § 246-100-208, filed 12/23/91, effective 1/23/92. Statutory Authority: RCW 43.20.050. 91-02-051 (Order 124B), recodified as § 246-100-208, filed 12/27/90, effective 1/31/91. Statutory Authority: Chapter 70.24 RCW. 88-17-058 (Order 318), § 248-100-208, filed 8/17/88.]

WAC 246-100-209 Counseling standards—Human immunodeficiency virus (HIV) pretest counseling—HIV post-test counseling. (1) Health care providers and other persons providing pretest counseling shall assess the individual's risk of acquiring and transmitting HIV by evaluating information about the individual's possible risk-behaviors and unique circumstances, and as appropriate;

(a) Base counseling on the recommendations of the Federal Centers for Disease Control and Prevention as published in the *Revised Guidelines for HIV Counseling, November 2001*; and

(b) Assist the individual to set a realistic behavior-change goal and establish strategies for reducing their risk of acquiring or transmitting HIV; and

(c) Provide appropriate risk reduction skills-building opportunities to support the behavior change goal; and

(d) Provide or refer for other appropriate prevention, support or medical services, including those services for other bloodborne pathogens.

(2) Health care providers and other persons providing post-test counseling shall:

(a) For all individuals tested for HIV, offer at least one individual counseling session at the time HIV test results are disclosed consistent with the requirements in subsection (1) of this section; and

(b) If the individual being counseled tested positive for HIV infection:

(i) Provide or arrange for at least one individual in-person counseling session consistent with the requirements in subsection (1) of this section;

(ii) Unless testing was anonymous, inform the individual that the identity of the individual testing positive for HIV infection will be confidentially reported to the state or local health officer;

(iii) Ensure compliance with the partner notification provisions contained in WAC 246-100-072, and inform the tested person of those requirements;

(iv) Develop or adopt a system to avoid documenting the names of referred partners in the permanent record of the individual being counseled; and

(v) Offer referral for alcohol and drug and mental health counseling, including suicide prevention, if appropriate; and

(vi) Provide or refer for medical evaluation including services for other bloodborne pathogens, antiretroviral treatment, HIV prevention and other support services; and

(vii) Provide or refer for tuberculosis screening.

[Statutory Authority: RCW 70.24.130 and 70.24.380. 05-11-110, § 246-100-209, filed 5/18/05, effective 6/18/05. Statutory Authority: RCW 70.24.125 and 70.24.130. 99-17-077, § 246-100-209, filed 8/13/99, effective 9/1/99. Statutory Authority: RCW 70.24.022, [70.24].340 and Public Law 104-146. 97-15-099, § 246-100-209, filed 7/21/97, effective 7/21/97. Statutory Authority: RCW 43.20.050 and 70.24.130. 92-02-019 (Order 225B), § 246-100-209, filed 12/23/91, effective 1/23/92. Statutory Authority: RCW 43.20.050. 91-02-051 (Order 124B), recodified as § 246-100-209, filed 12/27/90, effective 1/31/91. Statutory Authority: Chapter 70.24 RCW. 89-02-008 (Order 324), § 248-100-209, filed 12/27/88; 88-17-058 (Order 318), § 248-100-209, filed 8/17/88.]

WAC 246-100-211 Special diseases—Tuberculosis. (1) Health care providers diagnosing or caring for a person with tuberculosis, whether pulmonary or nonpulmonary, shall:

(a) Report the case to the local health officer or local health department in accordance with the provisions of this chapter, and

(b) Report patient status to the local health officer every three months or as requested.

(2) The local health officer or local health department shall:

(a) Have primary responsibility for control of tuberculosis within the designated jurisdiction;

(b) Maintain a tuberculosis control program including:

(i) Prophylaxis,

(ii) Treatment,

(iii) Surveillance,

(iv) Case finding,

(v) Contact tracing, and

(vi) Other aspects of epidemiologic investigation;

(c) Maintain a tuberculosis register of all persons with tuberculosis, whether new or recurrent, within the local jurisdiction including information about:

(i) Identification of patient,

(ii) Clinical condition,

(iii) Epidemiology of disease,

(iv) Frequency of examinations;

(d) Impose isolation of a person with tuberculosis in an infectious stage if that person does not observe precautions to prevent the spread of the infection;

(e) Designate the place of isolation when imposed;

(f) Release the person from isolation when appropriate;

(g) Maintain and provide outpatient tuberculosis diagnostic and treatment services as necessary, including public health nursing services and physician consultation; and

(h) Submit reports of all cases to the department in accordance with the provisions of this chapter.

(3) When a person with tuberculosis requires hospitalization,

(a) Hospital admission shall occur in accordance with procedures arranged by the local health officer and the medical director or administrator of the hospital, and

(b) The principal health care provider shall:

(i) Maintain responsibility for deciding date of discharge, and

(ii) Notify the local health officer of intended discharge in order to assure appropriate outpatient arrangements.

[Statutory Authority: RCW 43.20.050. 91-02-051 (Order 124B), recodified as § 246-100-211, filed 12/27/90, effective 1/31/91; 87-11-047 (Order 302), § 248-100-211, filed 5/19/87.]

Chapter 246-101 WAC
NOTIFIABLE CONDITIONS

WAC

246-101-001	Provisions of general applicability.
246-101-005	Purpose of notifiable conditions reporting.
246-101-010	Definitions within the notifiable conditions regulations.
246-101-015	Provisional condition notification.
246-101-101	Notifiable conditions and the health care provider.
246-101-105	Duties of the health care provider.
246-101-110	Means of notification.
246-101-115	Content of notifications.
246-101-120	Handling of case reports and medical information.
246-101-201	Notifiable conditions and laboratories.
246-101-205	Responsibilities and duties of the laboratory director.
246-101-210	Means of specimen submission.
246-101-215	Content of documentation accompanying specimen submission.
246-101-220	Means of notification for positive cultures or preliminary test results.
246-101-225	Content of notifications for positive cultures or preliminary test results.
246-101-230	Handling of case reports and medical information.
246-101-301	Notifiable conditions and health care facilities.
246-101-305	Duties of the health care facility.
246-101-310	Means of notification.
246-101-315	Content of notifications.
246-101-320	Handling of case reports and medical information.
246-101-401	Notifiable conditions and the responsibilities and duties of others.
246-101-405	Responsibilities of veterinarians.
246-101-410	Responsibilities of food service establishments.
246-101-415	Responsibilities of child day care facilities.
246-101-420	Responsibilities of schools.
246-101-425	Responsibilities of the general public.
246-101-501	Notifiable conditions and local health departments.
246-101-505	Duties of the local health officer or the local health department.
246-101-510	Means of notification.
246-101-515	Handling of case reports and medical information.
246-101-520	Special conditions—AIDS and HIV.
246-101-525	Special condition—Influenza.
246-101-601	Notifiable conditions and the department of health.
246-101-605	Duties of the department.
246-101-610	Handling of case reports and medical information.
246-101-615	Requirements for data dissemination.
246-101-620	Requirements for notification to the department of labor and industries.
246-101-625	Content of notifications to the department of labor and industries.
246-101-630	Special condition—Antibiotic resistant disease.
246-101-635	Special conditions—AIDS and HIV.
246-101-640	Special condition—Birth defects.
246-101-701	Notifiable conditions and the department of labor and industries.
246-101-705	Duties of the department of labor and industries.
246-101-710	Handling of case reports and medical information.
246-101-715	Requirements for data dissemination.
246-101-720	Requirements for notification to local health departments.
246-101-725	Requirements for notification to the department of health.
246-101-730	Special condition—Hospitalized burns.

WAC 246-101-001 Provisions of general applicability. WAC 246-101-005, 246-101-010, and 246-101-015 are applicable throughout this chapter.

[Statutory Authority: RCW 43.20.050 and 70.104.030. 00-23-120, § 246-101-001, filed 11/22/00, effective 12/23/00.]

WAC 246-101-005 Purpose of notifiable conditions reporting. The purpose of notifiable conditions reporting is to provide the information necessary for public health officials to protect the public's health by tracking communicable diseases and other conditions. These data are critical to local health departments and the departments of health and labor and industries in their efforts to prevent and control the spread of diseases and other conditions. Public health officials take steps to protect the public, based on these notifications. Treating persons already ill, providing preventive therapies for individuals who came into contact with infectious agents, investigating and halting outbreaks, and removing harmful health exposures are key ways public health officials protect the public. Public health workers also use these data to assess broader patterns, including historical trends and geographic clustering. By analyzing the broader picture, officials are able to take appropriate actions, including outbreak investigation, redirection of program activities, or policy development.

[Statutory Authority: RCW 43.20.050. 00-23-120, § 246-101-005, filed 11/22/00, effective 12/23/00.]

WAC 246-101-010 Definitions within the notifiable conditions regulations. The following definitions apply in the interpretation and enforcement of this chapter:

(1) "Blood lead level" means a measurement of lead content in whole blood.

(2) "Board" means the Washington state board of health.

(3) "Carrier" means a person harboring a specific infectious agent and serving as a potential source of infection to others.

(4) "Case" means a person, alive or dead, diagnosed with a particular disease or condition by a health care provider with diagnosis based on clinical or laboratory criteria or both.

(5) "Child day care facility" means an agency regularly providing care for a group of children for less than twenty-four hours a day and subject to licensing under chapter 74.15 RCW.

(6) "Condition notifiable within three work days" means a notifiable condition that must be reported to the local health officer or department within three working days following date of diagnosis. For example, if a condition notifiable within three work days is diagnosed on a Friday afternoon, the report must be submitted by the following Wednesday.

(7) "Communicable disease" means a disease caused by an infectious agent which can be transmitted from one person, animal, or object to another person by direct or indirect means including transmission via an intermediate host or vector, food, water, or air.

(8) "Communicable disease cluster" means two or more cases of a confirmed or suspected communicable disease with a suspected common source diagnosed or exposed within a twenty-four hour period.

(9) "Contact" means a person exposed to an infected person, animal, or contaminated environment that may lead to infection.

(10) "Department" means the Washington state department of health.

(11) "Disease of suspected bioterrorism origin" means a disease caused by viruses, bacteria, fungi, or toxins from living organisms that are used to produce death or disease in humans, animals, or plants. Many of these diseases may have nonspecific presenting symptoms. The following situations could represent a possible bioterrorism event and should be reported immediately to the local health department:

(a) A single diagnosed or strongly suspected case of disease caused by an uncommon agent or a potential agent of bioterrorism occurring in a patient with no known risk factors;

(b) A cluster of patients presenting with a similar syndrome that includes unusual disease characteristics or unusually high morbidity or mortality without obvious etiology; or

(c) Unexplained increase in a common syndrome above seasonally expected levels.

(12) "Elevated blood lead level" means blood lead levels equal to or greater than 25 micrograms per deciliter for persons aged fifteen years or older, or equal to or greater than 10 micrograms per deciliter in children less than fifteen years of age.

(13) "Food service establishment" means a place, location, operation, site, or facility where food is manufactured, prepared, processed, packaged, dispensed, distributed, sold, served, or offered to the consumer regardless of whether or not compensation for food occurs.

(14) "Health care facility" means:

(a) Any facility or institution licensed under chapter 18.20 RCW, Boarding homes; chapter 18.46 RCW, Birthing centers; chapter 18.51 RCW, Nursing homes; chapter 70.41 RCW, Hospitals; chapter 70.128 RCW, Adult family homes; or chapter 71.12 RCW, Private establishments;

(b) Clinics, or other settings where one or more health care providers practice; and

(c) In reference to a sexually transmitted disease, other settings as defined in chapter 70.24 RCW.

(15) "Health care provider" means any person having direct or supervisory responsibility for the delivery of health care who is:

(a) Licensed or certified in this state under Title 18 RCW; or

(b) Military personnel providing health care within the state regardless of licensure.

(16) "Health care services to the patient" means treatment, consultation, or intervention for patient care.

(17) "Health carrier" means a disability insurer regulated under chapter 48.20 or 48.21 RCW, a health care service contractor as defined in RCW 48.44.010, or a health maintenance organization as defined in RCW 48.46.020.

(18) "HIV testing" means conducting a laboratory test or sequence of tests to detect the human immunodeficiency virus (HIV) or antibodies to HIV performed in accordance with requirements to WAC 246-100-207. To assure that the protection, including, but not limited to, pre- and post-test counseling, consent, and confidentiality afforded to HIV testing as described in chapter 246-100 WAC also applies to the enumeration of CD4 + (T4) lymphocyte counts (CD4 + counts) and CD4 + (T4) percents of total lymphocytes (CD4 + percents) when used to diagnose HIV infection, CD4 + counts and CD4 + percents will be presumed HIV testing except when shown by clear and convincing evidence to be for use in the following circumstances:

(a) Monitoring previously diagnosed infection with HIV;

(b) Monitoring organ or bone marrow transplants;

(c) Monitoring chemotherapy;

(d) Medical research; or

(e) Diagnosis or monitoring of congenital immunodeficiency states or autoimmune states not related to HIV.

The burden of proving the existence of one or more of the circumstances identified in (a) through (e) of this subsection shall be on the person asserting the existence.

(19) "Immediately notifiable condition" means a notifiable condition of urgent public health importance, a case or suspected case of which must be reported to the local health officer or the department immediately at the time of diagnosis or suspected diagnosis.

(20) "Infection control measures" means the management of infected persons, or of a person suspected to be infected, and others in a manner to prevent transmission of the infectious agent.

(21) "Institutional review board" means any board, committee, or other group formally designated by an institution, or authorized under federal or state law, to review, approve the initiation of, or conduct periodic review of research programs to assure the protection of the rights and welfare of human research subjects as defined in RCW 70.02.010.

(22) "Isolation" means the separation or restriction of activities of infected individuals, or of persons suspected to be infected, from other persons to prevent transmission of the infectious agent.

(23) "Laboratory" means any facility licensed as a medical test site under chapter 70.42 RCW.

(24) "Laboratory director" means the director or manager, by whatever title known, having the administrative responsibility in any licensed medical test site.

(25) "Local health department" means the city, town, county, or district agency providing public health services to

persons within the area, established under chapters 70.05, 70.08, and 70.46 RCW.

(26) "Local health officer" means the individual having been appointed under chapter 70.05 RCW as the health officer for the local health department, or having been appointed under chapter 70.08 RCW as the director of public health of a combined city-county health department.

(27) "Member of the general public" means any person present within the boundary of the state of Washington.

(28) "Monthly notifiable condition" means a notifiable condition which must be reported to the local health officer or department within one month of diagnosis.

(29) "Nosocomial infection" means an infection acquired in a hospital or other health care facility.

(30) "Notifiable condition" means a disease or condition of public health importance, a case of which, and for certain diseases, a suspected case of which, must be brought to the attention of the local health officer or the state health officer.

(31) "Other rare diseases of public health significance" means a disease or condition, of general public health concern, which is occasionally or not ordinarily seen in the state of Washington including, but not limited to, viral hemorrhagic fevers, Rocky Mountain Spotted fever, and other tick borne diseases. This also includes a communicable disease that would be of general public concern if detected in Washington.

(32) "Outbreak" means the occurrence of cases of a disease or condition in any area over a given period of time in excess of the expected number of cases.

(33) "Patient" means a case, suspected case, or contact.

(34) "Pesticide poisoning" means the disturbance of function, damage to structure, or illness in humans resulting from the inhalation, absorption, ingestion of, or contact with any pesticide.

(35) "Principal health care provider" means the attending health care provider recognized as primarily responsible for diagnosis or treatment of a patient, or in the absence of such, the health care provider initiating diagnostic testing or treatment for the patient.

(36) "Public health authorities" means local health departments, the state health department, and the department of labor and industries personnel charged with administering provisions of this chapter.

(37) "Quarantine" means the separation or restriction on activities of an individual having been exposed to or infected with an infectious agent, to prevent disease transmission.

(38) "School" means a facility for programs of education as defined in RCW 28A.210.070 (preschool and kindergarten through grade twelve).

(39) "Sexually transmitted disease (STD)" means a bacterial, viral, fungal, or parasitic disease or condition which is usually transmitted through sexual contact, including:

(a) Acute pelvic inflammatory disease;

(b) Chancroid;

(c) *Chlamydia trachomatis* infection;

(d) Genital and neonatal Herpes simplex;

(e) Genital human papilloma virus infection;

(f) Gonorrhea;

(g) Granuloma inguinale;

(h) Hepatitis B infection;

(i) Human immunodeficiency virus (HIV) infection and acquired immunodeficiency syndrome (AIDS);

(j) Lymphogranuloma venereum;

(k) Nongonococcal urethritis (NGU); and

(l) Syphilis.

(40) "State health officer" means the person designated by the secretary of the department to serve as statewide health officer, or, in the absence of this designation, the person having primary responsibility for public health matters in the state.

(41) "Suspected case" means a person whose diagnosis is thought likely to be a particular disease or condition with suspected diagnosis based on signs and symptoms, laboratory evidence, or both.

(42) "Third-party payor" means an insurer regulated under Title 48 RCW authorized to transact business in this state or other jurisdiction, including a health care service contractor, and health maintenance organization; or an employee welfare benefit plan; or a state or federal health benefit program as defined in RCW 70.02.010.

(43) "Unexplained critical illness or death" means cases of illness or death with infectious hallmarks but no known etiology, in previously healthy persons one to forty-nine years of age excluding those with chronic medical conditions (e.g., malignancy, diabetes, AIDS, cirrhosis).

(44) "Veterinarian" means an individual licensed under provisions of chapter 18.92 RCW, Veterinary medicine, surgery, and dentistry and practicing animal health care.

[Statutory Authority: RCW 43.20.050. 00-23-120, § 246-101-010, filed 11/22/00, effective 12/23/00.]

WAC 246-101-015 Provisional condition notification. This section describes how conditions can become notifiable; what period of time conditions are provisionally notifiable; what analyses must be accomplished during provisional notification status; the transition of provisionally notifiable conditions to permanent notification or deletion of notification requirements. The department's goal for provisionally notifiable conditions is to collect enough information to determine whether requiring notification improves public health.

(1) The state health officer may:

(a) Request reporting of cases and suspected cases of disease and conditions in addition to those required in Tables HC-1, Lab-1, and HF-1 on a provisional basis for a period of time less than forty-eight months when:

(i) The disease or condition is newly recognized or recently acknowledged as a public health concern;

(ii) Epidemiological investigation based on notification of cases may contribute to understanding of the disease or condition;

(iii) There is reason to expect that the information acquired through notification will assist the state and/or local health department to design or implement intervention strategies that will result in an improvement in public health; and

(iv) Written notification is provided to all local health officers regarding:

(A) Additional reporting requirements; and

(B) Rationale or justification for specifying the disease or condition as notifiable.

(b) Request laboratories to submit specimens indicative of infections in addition to those required in Table Lab-1 on a provisional basis for a period of time less than forty-eight months, if:

(i) The infection is of public health concern;

(ii) The department has a plan for using data gathered from the specimens; and

(iii) Written notification is provided to all local health officers and all laboratory directors explaining:

(A) Actions required; and

(B) Reason for the addition.

(2) Within forty months of the state health officer's designation of a condition as provisionally notifiable in subsection (1) of this section, or requests for laboratories to submit specimens indicative of infections in subsection (2) of this section, the department will conduct an evaluation for the notification requirement that:

(a) Estimates the societal cost resulting from the provisionally notifiable condition;

(i) Determine the prevalence of the provisional notifiable condition; and

(ii) Identify the quantifiable costs resulting from the provisionally notifiable condition; and

(iii) Discuss the qualitative costs resulting from the provisionally notifiable condition.

(b) Describes how the information was used and how it will continue to be used to design and implement intervention strategies aimed at combating the provisionally notifiable condition;

(c) Verifies the effectiveness of previous intervention strategies at reducing the incidence, morbidity, or mortality of the provisional notifiable condition;

(d) Identifies the quantitative and qualitative costs of the provisional notification requirement;

(e) Compares the costs of the provisional notification requirement with the estimated cost savings resulting from the intervention based on the information provided through the provisional notification requirement;

(f) Describes the effectiveness and utility of using the notifiable conditions process as a mechanism to collect these data; and

(g) Describes that a less burdensome data collection system (example: Biennial surveys) would not provide the information needed to effectively establish and maintain the intervention strategies.

(3) Based upon the evaluation in subsection (2) of this section, the board will assess results of the evaluation after the particular condition is notifiable or the requirement for laboratories to submit specimens indicative of infections has been in place for no longer than forty months. The board will determine based upon the results of the evaluation whether the provisionally notifiable condition or the requirement for laboratories to submit specimens indicative of infections should be:

(a) Permanently notifiable in the same manner as the provisional notification requirement;

(b) Permanently notifiable in a manner that would use the evaluation results to redesign the notification requirements; or

(c) Deleted from the notifiable conditions system.

(4) The department shall have the authority to declare an emergency and institute notification requirements under the provisions of RCW 34.05.350.

[Statutory Authority: RCW 43.20.050, 70.24.125. 05-03-055, § 246-101-015, filed 1/11/05, effective 2/11/05. Statutory Authority: RCW 43.20.050. 00-23-120, § 246-101-015, filed 11/22/00, effective 12/23/00.]

WAC 246-101-101 Notifiable conditions and the health care provider. This section describes the conditions that Washington's health care providers must notify public health authorities of on a statewide basis. The board finds that the conditions in the table below (Table HC-1) are notifiable for the prevention and control of communicable and noninfectious diseases and conditions in Washington. Principal health care providers shall notify public health authorities of these conditions as individual case reports using procedures described throughout this chapter. Other health care providers in attendance shall notify public health authorities of the following notifiable conditions, unless the condition notification has already been made. Local health officers may require additional conditions to be notifiable within the local health officer's jurisdiction.

WAC 246-101-105, 246-101-110, 246-101-115, and 246-101-120 also include requirements for how notifications shall be made, when they shall be made, the content of these notifications, and how information regarding notifiable conditions cases must be handled and may be disclosed.

Table HC-1 (Conditions Notifiable by Health Care Providers)

Notifiable Condition	Time Frame for Notification	Notifiable to Local Health Department	Notifiable to State Department of Health
Acquired Immunodeficiency Syndrome (AIDS)	Within 3 work days	√	
Animal Bites	Immediately	√	
Arboviral Disease	Within 3 work days	√	
Asthma, occupational	Monthly		√
Birth Defects – Autism Spectrum Disorders	Monthly		√
Birth Defects – Cerebral Palsy	Monthly		√
Birth Defects – Alcohol Related Birth Defects	Monthly		√
Botulism (foodborne, infant, and wound)	Immediately	√	
Brucellosis (*Brucella* species)	Immediately	√	
Campylobacteriosis	Within 3 work days	√	

Notifiable Condition	Time Frame for Notification	Notifiable to Local Health Department	Notifiable to State Department of Health
Chancroid	Within 3 work days	√	
Chlamydia trachomatis infection	Within 3 work days	√	
Cholera	Immediately	√	
Cryptosporidiosis	Within 3 work days	√	
Cyclosporiasis	Within 3 work days	√	
Diphtheria	Immediately	√	
Disease of suspected bioterrorism origin (including): • Anthrax • Smallpox	Immediately	√	
Disease of suspected foodborne origin (communicable disease clusters only)	Immediately	√	
Disease of suspected waterborne origin (communicable disease clusters only)	Immediately	√	
Enterohemorrhagic *E. coli* (shiga-like toxin producing infections only) such as *E. coli* O157:H7 Infection	Immediately	√	
Giardiasis	Within 3 work days	√	
Gonorrhea	Within 3 work days	√	
Granuloma inguinale	Within 3 work days	√	
Haemophilus influenzae (invasive disease, children under age 5)	Immediately	√	
Hantavirus pulmonary syndrome	Within 3 work days	√	
Hemolytic uremic syndrome	Immediately	√	
Hepatitis A (acute infection)	Immediately	√	
Hepatitis B (acute infection)	Within 3 work days	√	
Hepatitis B surface antigen + pregnant women	Within 3 work days	√	
Hepatitis B (chronic) – Initial diagnosis, and previously unreported prevalent cases	Monthly	√	
Hepatitis C – Acute and chronic	Monthly	√	
Hepatitis (infectious), unspecified	Within 3 work days	√	
Herpes simplex, neonatal and genital (initial infection only)	Within 3 work days	√	
Human immunodeficiency virus (HIV) infection	Within 3 work days	√	
Legionellosis	Within 3 work days	√	
Leptospirosis	Within 3 work days	√	
Listeriosis	Immediately	√	
Lyme Disease	Within 3 work days	√	
Lymphogranuloma venereum	Within 3 work days	√	
Malaria	Within 3 work days	√	
Measles (rubeola)	Immediately	√	
Meningococcal disease	Immediately	√	
Mumps	Within 3 work days	√	
Paralytic shellfish poisoning	Immediately	√	
Pertussis	Immediately	√	
Pesticide poisoning (hospitalized, fatal, or cluster)	Immediately		√
Pesticide poisoning (all other)	Within 3 work days		√
Plague	Immediately	√	
Poliomyelitis	Immediately	√	
Psittacosis	Within 3 work days	√	
Q Fever	Within 3 work days	√	
Rabies (Confirmed Human or Animal)	Immediately	√	

Notifiable Condition	Time Frame for Notification	Notifiable to Local Health Department	Notifiable to State Department of Health
Rabies (Including use of post-exposure prophylaxis)	Within 3 work days	√	
Relapsing fever (borreliosis)	Immediately	√	
Rubella (including congenital rubella syndrome)	Immediately	√	
Salmonellosis	Immediately	√	
Serious adverse reactions to immunizations	Within 3 work days	√	
Shigellosis	Immediately	√	
Syphilis	Within 3 work days	√	
Tetanus	Within 3 work days	√	
Trichinosis	Within 3 work days	√	
Tuberculosis	Immediately	√	
Tularemia	Within 3 work days	√	
Typhus	Immediately	√	
Vibriosis	Within 3 work days	√	
Yellow fever	Immediately	√	
Yersiniosis	Within 3 work days	√	
Other rare diseases of public health significance	Immediately	√	
Unexplained critical illness or death	Immediately	√	

[Statutory Authority: RCW 43.20.050, 70.24.125. 05-03-055, § 246-101-101, filed 1/11/05, effective 2/11/05. Statutory Authority: RCW 43.20.050, 70.24.125 and 70.28.010. 00-23-120, § 246-101-101, filed 11/22/00, effective 12/23/00.]

WAC 246-101-105 Duties of the health care provider. Health care providers shall:

(1) Notify the local health department where the patient resides (in the event that patient residence cannot be determined, notify the local health department where the health care providers practice) regarding:

(a) Cases or suspected cases of notifiable conditions specified as notifiable to local health departments in Table HC-1;

(b) Cases of conditions designated as notifiable by the local health officer within that health officer's jurisdiction;

(c) Outbreaks or suspected outbreaks of disease. These patterns include, but are not limited to, suspected or confirmed outbreaks of chickenpox, influenza, viral meningitis, nosocomial infection suspected due to contaminated food products or devices, or environmentally related disease;

(d) Known barriers which might impede or prevent compliance with orders for infection control or quarantine; and

(e) Name, address, and other pertinent information for any case, suspected case or carrier refusing to comply with prescribed infection control measures.

(2) Notify the department of health of conditions designated as notifiable to the local health department when:

(a) A local health department is closed or representatives of the local health department are unavailable at the time a case or suspected case of an immediately notifiable condition occurs;

(b) A local health department is closed or representatives of the local health department are unavailable at the time an outbreak or suspected outbreak of communicable disease occurs.

(3) Notify the department of pesticide poisoning that is fatal, causes hospitalization or occurs in a cluster.

(4) Notify the department as specified in Table HC-1 regarding cases of notifiable conditions specified as notifiable to the department.

(5) Assure that positive cultures and preliminary test results for notifiable conditions of specimens referred to laboratories outside of Washington for testing are correctly notified to the local health department of the patient's residence or the department as specified in Table Lab-1. This requirement can be satisfied by:

(a) Arranging for the referral laboratory to notify either the local health department, the department, or both; or

(b) Forwarding the notification of the test result from the referral laboratory to the local health department, the department, or both.

(6) Cooperate with public health authorities during investigation of:

(a) Circumstances of a case or suspected case of a notifiable condition or other communicable disease; and

(b) An outbreak or suspected outbreak of disease.

(7) Provide adequate and understandable instruction in disease control measures to each patient who has been diagnosed with a case of a communicable disease, and to contacts who may have been exposed to the disease.

(8) Maintain responsibility for deciding date of discharge for hospitalized tuberculosis patients.

(9) Notify the local health officer of intended discharge of tuberculosis patients in order to assure appropriate outpatient arrangements are arranged.

[Statutory Authority: RCW 43.20.050 and 70.104.030. 00-23-120, § 246-101-105, filed 11/22/00, effective 12/23/00.]

WAC 246-101-110 Means of notification. (1) Conditions designated as:

(a) Immediately notifiable must be reported by telephone or by secure facsimile copy of a written case report to the local health officer or the department as specified in Table HC-1;

(b) Notifiable within three working days must be reported by written case report or secure facsimile copy to the local health officer or department as specified in Table HC-1; and

(c) Notifiable on a monthly basis must be reported by written case report or secure facsimile copy to the local health officer or the department as specified in Table HC-1.

(2) The local health officer may authorize notifications by telephone or secure electronic transmission for cases and suspected cases of notifiable conditions specified as notifiable to local health departments.

(3) The state health officer may authorize notifications by telephone or secure electronic transmission for cases and suspected cases of notifiable conditions specified as notifiable to the department.

[Statutory Authority: RCW 43.20.050, 70.24.125, 70.28.010 and 70.104.-030. 00-23-120, § 246-101-110, filed 11/22/00, effective 12/23/00.]

WAC 246-101-115 Content of notifications. (1) For each condition listed in Table HC-1, health care providers must provide the following information for each case or suspected case:

(a) Name;

(b) Address;

(c) Telephone number;

(d) Date of birth;

(e) Sex;

(f) Diagnosis or suspected diagnosis of disease or condition;

(g) Pertinent laboratory data, if available;

(h) Name and address or telephone number of the principal health care provider;

(i) Name and address or telephone number of the person providing the report; and

(j) Other information as the department may require on forms generated by the department.

(2) The local health officer or state health officer may require other information of epidemiological or public health value.

[Statutory Authority: RCW 43.20.050, 43.70.545, 70.24.125, 70.28.010 and 70.104.030. 00-23-120, § 246-101-115, filed 11/22/00, effective 12/23/00.]

WAC 246-101-120 Handling of case reports and medical information. (1) All records and specimens containing or accompanied by patient identifying information are confidential.

(2) Health care providers who know of a person with a notifiable condition, other than a sexually transmitted disease, shall release identifying information only to other individuals responsible for protecting the health and well-being of the public through control of disease.

(3) Health care providers with knowledge of a person with sexually transmitted disease, and following the basic principles of health care providers, which respect the human dignity and confidentiality of patients:

(a) May disclose identity of a person or release identifying information only as specified in RCW 70.24.105; and

(b) Shall under RCW 70.24.105(6), use only the following customary methods for exchange of medical information:

(i) Health care providers may exchange medical information related to HIV testing, HIV test results, and confirmed HIV or confirmed STD diagnosis and treatment in order to provide health care services to the patient. This means that information shared impacts the care or treatment decisions concerning the patient; and the health care provider requires the information for the patient's benefit.

(ii) Health care providers responsible for office management are authorized to permit access to a patient's medical information and medical record by medical staff or office staff to carry out duties required for care and treatment of a patient and the management of medical information and the patient's medical record.

(c) Health care providers conducting a clinical HIV research project shall report the identity of an individual participating in the project unless:

(i) The project has been approved by an institutional review board; and

(ii) The project has a system in place to remind referring health care providers of their reporting obligations under this chapter.

(4) Health care providers shall establish and implement policies and procedures to maintain confidentiality related to a patient's medical information.

[Statutory Authority: RCW 43.20.050 and 70.104.030. 00-23-120, § 246-101-120, filed 11/22/00, effective 12/23/00.]

WAC 246-101-201 Notifiable conditions and laboratories. This section describes the conditions about which Washington's laboratories must notify public health authorities of on a statewide basis. The board finds that the conditions in the table below (Table Lab-1) are notifiable for the prevention and control of communicable and noninfectious diseases and conditions in Washington. The board also finds that submission of specimens for many of these conditions will further prevent the spread of disease. Laboratory directors must notify public health authorities of positive cultures and preliminary test results as individual case reports and provide specimen submissions using procedures described throughout this chapter. Local health officers may require additional conditions to be notifiable within the local health officer's jurisdiction.

WAC 246-101-205, 246-101-210, 246-101-215, 246-101-220, 246-101-225, and 246-101-230 also include requirements for how notifications and specimen submissions are made, when they are made, the content of these notifications and specimen submissions, and how information regarding notifiable conditions cases must be handled and may be disclosed.

Table Lab-1 (Conditions Notifiable by Laboratory Directors)

Notifiable Condition	Time Frame for Notification	Notifiable to Local Health Department	Notifiable to Department of Health	Specimen Submission to Department of Health (Type & Timing)
Arboviral Disease (Isolation; Detection of Viral Nucleic Acid or Antibody)	2 days	√		
Blood Lead Level	Elevated Levels – 2 Days Nonelevated Levels – Monthly		√	
Botulism (Foodborne)	Immediately	√		Serum and Stool - If available, submit suspect foods (2 days)
Botulism (Infant)	Immediately	√		Stool (2 days)
Botulism (Wound)	Immediately	√		Culture, Serum, Debrided tissue, or Swab sample (2 days)
Brucellosis (*Brucella* species)	2 days	√		Subcultures (2 days)
CD4 + (T4) lymphocyte counts and/or CD4 + (T4) (patients aged thirteen or older)	Monthly	Only when the local health department is designated by the Department of Health	√ (Except King County)	
Chlamydia trachomatis infection	2 days	√		
Cholera	Immediately	√		Culture (2 days)
Cryptosporidiosis	2 days	√		
Cyclosporiasis	2 days	√		Specimen (2 days)
Diphtheria	2 days	√		Culture (2 days)
Disease of Suspected Bioterrorism Origin (examples): • Anthrax • Smallpox	Immediately	√		Culture (2 days)
Enterohemorrhagic *E. coli* (shiga-like toxin producing infections only) such as *E. coli* O157:H7 Infection	2 days	√		Culture (2 days)
Gonorrhea	2 days	√		
Hepatitis A (IgM positive)	2 days	√		
Hepatitis B	Monthly	√		
Hepatitis C	Monthly	√		
Human immunodeficiency virus (HIV) infection (for example, positive Western Blot assays, P24 antigen or viral culture tests)	2 days	Only when the local health department is designated by the Department of Health	√ (Except King County)	
Human immunodeficiency virus (HIV) infection (ll viral load detection test results - detectable and undetectable)	Monthly	Only when the local health department is designated by the Department of Health	√ (Except King County)	
Listeriosis	2 days	√		
Measles (rubeola)	Immediately	√		Serum (2 days)
Meningococcal disease	2 days	√		Culture (Blood/CSF or other sterile sites) (2 days)
Pertussis	2 days	√		

Notifiable Condition	Time Frame for Notification	Notifiable to Local Health Department	Notifiable to Department of Health	Specimen Submission to Department of Health (Type & Timing)
Plague	Immediately	√		Culture or other appropriate clinical material (2 days)
Rabies (human or animal)	Immediately	√ (Pathology Report Only)		Tissue or other appropriate clinical material (Upon request only)
Salmonellosis	2 days	√		Culture (2 days)
Shigellosis	2 days	√		Culture (2 days)
Syphilis				Serum (2 days)
Tuberculosis	2 days		√	Culture (2 days)
Tuberculosis (Antibiotic sensitivity for first isolates)	2 days		√	
Tularemia				Culture or other appropriate clinical material (2 days)
Other rare diseases of public health significance	Immediately	√		

Additional notifications that are requested but not mandatory include:

(1) Laboratory directors may notify either local health departments or the department or both of other laboratory results through cooperative agreement.

(2) Laboratory directors may submit malaria cultures to the state public health laboratories.

[Statutory Authority: RCW 70.24.125. 06-16-117, § 246-101-201, filed 8/1/06, effective 9/1/06. Statutory Authority: RCW 43.20.050, 70.24.125. 05-03-055, § 246-101-201, filed 1/11/05, effective 2/11/05. Statutory Authority: RCW 43.20.050, 70.24.125 and 70.28.010. 00-23-120, § 246-101-201, filed 11/22/00, effective 12/23/00.]

WAC 246-101-205 Responsibilities and duties of the laboratory director. Laboratory directors shall:

(1) Notify the local health department where the patient resides (in the event that patient residence cannot be determined, notify the local health department where the laboratory is located) regarding:

(a) Positive cultures and preliminary test results of notifiable conditions specified as notifiable to the local health department in Table Lab-1.

(b) Positive cultures and preliminary test results of conditions specified as notifiable by the local health officer within that health officer's jurisdiction.

(2) If the laboratory is unable to determine the local health department of the patient's residence, the laboratory director shall notify the local health department in which the health care provider that ordered the laboratory test is located.

(3) Notify the department of health of conditions designated as notifiable to the local health department when:

(a) A local health department is closed or representatives of the local health department are unavailable at the time a positive culture or preliminary test results of an immediately notifiable condition occurs;

(b) A local health department is closed or representatives of the local health department are unavailable at the time an outbreak or suspected outbreak of communicable disease occurs.

(4) Notify the department of positive cultures and preliminary test results for conditions designated notifiable to the department in Table Lab-1.

(5) Notify the department of nonelevated blood lead levels on a monthly basis.

(6) Submit specimens for conditions noted in Table Lab-1 to the Washington state public health laboratories or other laboratory designated by the state health officer for diagnosis, confirmation, storage, or further testing.

(7) Ensure that positive cultures and preliminary test results for notifiable conditions of specimens referred to other laboratories for testing are correctly notified to the correct local health department or the department. This requirement can be satisfied by:

(a) Arranging for the referral laboratory to notify either the local health department, the department, or both; or

(b) Forwarding the notification of the test result from the referral laboratory to the local health department, the department, or both.

(8) Cooperate with public health authorities during investigation of:

(a) Circumstances of a case or suspected case of a notifiable condition or other communicable disease; and

(b) An outbreak or suspected outbreak of disease.

(9) Laboratory directors may designate responsibility for working and cooperating with public health authorities to certain employees as long as designated employees are:

(a) Readily available; and

(b) Able to provide requested information in a timely manner.

[Statutory Authority: RCW 43.20.050. 00-23-120, § 246-101-205, filed 11/22/00, effective 12/23/00.]

WAC 246-101-210 Means of specimen submission. Required laboratory specimen submissions as outlined in Table Lab-1 shall be forwarded within two days. Laboratories shall follow the procedures below in submitting specimens:

(1) Laboratories located in King County shall forward required specimen submissions (except tuberculosis cultures) to:

Public Health Seattle and King County - Laboratory
325 9th Avenue
Box 359973
Seattle, WA 98104-2499

(2) Laboratories located in King County shall forward required tuberculosis cultures to:

Washington State Public Health Laboratories
Washington State Department of Health
1610 NE 150th Street
Seattle, WA 98155

(3) Laboratories located outside of King County shall forward all required specimen submissions to:

Washington State Public Health Laboratories
Washington State Department of Health
1610 NE 150th Street
Seattle, WA 98155

(4) The state health officer may designate additional laboratories as public health referral laboratories.

[Statutory Authority: RCW 43.20.050, 70.24.125 and 70.28.010. 00-23-120, § 246-101-210, filed 11/22/00, effective 12/23/00.]

WAC 246-101-215 Content of documentation accompanying specimen submission. For each condition listed in Table Lab-1, laboratory directors must provide the following information with each specimen submission:

(1) Type of specimen tested;

(2) Name of reporting laboratory;

(3) Telephone number of reporting laboratory;

(4) Date specimen collected;

(5) Requesting health care provider's name;

(6) Requesting health care provider's phone number or address, or both;

(7) Test result;

(8) Name of patient (if available), or patient identifier otherwise;

(9) Sex of patient (if available);

(10) Date of birth of patient (if available);

(11) Address of patient (if available);

(12) Telephone number of patient (if available);

(13) Other information of epidemiological value (if available).

[Statutory Authority: RCW 43.20.050, 70.24.125 and 70.28.010. 00-23-120, § 246-101-215, filed 11/22/00, effective 12/23/00.]

WAC 246-101-220 Means of notification for positive cultures or preliminary test results. (1) Conditions designated as:

(a) Notifiable within two days must be reported by written case report or secure facsimile copy to the local health officer or the department as specified in Table Lab-1 within two working days; and

(b) Notifiable on a monthly basis must be reported by written case report or secure facsimile copy to the local health officer or the department as specified in Table Lab-1.

(2) The local health officer may authorize notifications by telephone or secure electronic transmission for cases and suspected cases of notifiable conditions specified as notifiable to local health departments.

(3) The state health officer may authorize notifications by telephone or secure electronic transmission for cases and suspected cases of notifiable conditions specified as notifiable to the department.

[Statutory Authority: RCW 43.20.050, 70.24.125 and 70.28.010. 00-23-120, § 246-101-220, filed 11/22/00, effective 12/23/00.]

WAC 246-101-225 Content of notifications for positive cultures or preliminary test results. (1) For each condition listed in Table Lab-1, laboratory directors must provide the following information for each positive culture or suggestive test result:

(a) Type of specimen tested;

(b) Name of reporting laboratory;

(c) Telephone number of reporting laboratory;

(d) Date specimen collected;

(e) Date specimen received by reporting laboratory;

(f) Requesting health care provider's name;

(g) Requesting health care provider's phone number or address, or both;

(h) Test result;

(i) Name of patient (if available), or patient identifier otherwise;

(j) Sex of patient (if available);

(k) Date of birth or age of patient (if available); and

(l) Other information of epidemiological value (if available).

(2) Local health officers and the state health officer may require laboratory directors to report other information of epidemiological or public health value.

[Statutory Authority: RCW 43.20.050, 43.70.545, 70.24.125 and 70.28.010. 00-23-120, § 246-101-225, filed 11/22/00, effective 12/23/00.]

WAC 246-101-230 Handling of case reports and medical information. (1) All records and specimens containing or accompanied by patient identifying information are confidential. The Washington state public health laboratories, other laboratories approved as public health referral laboratories, and any persons, institutions, or facilities submitting specimens or records containing patient-identifying information shall maintain the confidentiality of identifying information accompanying submitted laboratory specimens.

(2) Laboratory directors shall establish and implement policies and procedures to maintain confidentiality related to a patient's medical information.

(3) Laboratory directors and personnel working in laboratories who know of a person with a notifiable condition, other than a sexually transmitted disease, shall release identifying information only to other individuals responsible for protecting the health and well-being of the public through control of disease.

(4) Laboratory directors and personnel working in laboratories with knowledge of a person with sexually transmitted disease, and following the basic principles of health care providers, which respect the human dignity and confidentiality of patients:

(a) May disclose identity of a person or release identifying information only as specified in RCW 70.24.105; and

(b) Shall under RCW 70.24.105(6), use only the following customary methods for exchange of medical information:

(i) Laboratory directors and personnel working in laboratories may exchange medical information related to HIV testing, HIV test results, and confirmed HIV or confirmed STD diagnosis and treatment in order to provide health care services to the patient. This means that information shared impacts the care or treatment decisions concerning the patient; and the laboratory director or personnel working in the laboratory requires the information for the patient's benefit.

(ii) Laboratory directors are authorized to permit access to a patient's medical information and medical record by laboratory staff or office staff to carry out duties required for care and treatment of a patient and the management of medical information and the patient's medical record.

[Statutory Authority: RCW 43.20.050. 00-23-120, § 246-101-230, filed 11/22/00, effective 12/23/00.]

WAC 246-101-301 Notifiable conditions and health care facilities. This section describes the conditions that Washington's health care facilities must notify public health authorities of on a statewide basis. The board finds that the conditions in the table below (Table HF-1) are notifiable for the prevention and control of communicable and noninfectious diseases and conditions. Local health officers may require additional conditions to be notifiable within the local health officer's jurisdiction. Health care facilities are required to notify public health authorities of cases that occur in their facilities. Health care facilities may choose to assume the notification for their health care providers for conditions designated in Table HF-1. Health care facilities may not assume the reporting requirements of laboratories that are components of the health care facility. Local health officers may require additional conditions to be notifiable within the local health officer's jurisdiction.

WAC 246-101-305, 246-101-310, 246-101-315, and 246-101-320 also include requirements for how notifications shall be made, when they are made, the content of these notifications, and how information regarding notifiable conditions cases must be handled and may be disclosed.

Table HF-1 (Conditions Notifiable by Health Care Facilities)

Notifiable Condition	Time Frame for Notification	Notifiable to Local Health Department	Notifiable to State Department of Health
Acquired Immunodeficiency Syndrome (AIDS)	Within 3 work days		√
Animal Bites	Immediately	√	
Arboviral Disease	Within 3 work days	√	
Asthma, occupational	Monthly		√
Birth Defects – Abdominal Wall Defects (inclusive of gastroschisis and omphalocele)	Monthly		√
Birth Defects – Autism Spectrum Disorders	Monthly		√
Birth Defects – Cerebral Palsy	Monthly		√
Birth Defects – Down Syndrome	Monthly		√
Birth Defects – Alcohol Related Birth Defects	Monthly		√
Birth Defects – Hypospadias	Monthly		√
Birth Defects – Limb reductions	Monthly		√
Birth Defects – Neural Tube Defects (inclusive of anencephaly and spina bifida)	Monthly		√
Birth Defects – Oral Clefts (inclusive of cleft lip with/without cleft palate)	Monthly		√
Botulism (foodborne, infant, and wound)	Immediately	√	
Brucellosis (*Brucella* species)	Immediately	√	
Cancer (*See chapter 246-430 WAC*)	Monthly		√
Chancroid	Within 3 work days	√	
Chlamydia trachomatis infection	Within 3 work days	√	
Cholera	Immediately	√	
Cryptosporidiosis	Within 3 work days	√	
Cyclosporiasis	Within 3 work days	√	
Diphtheria	Immediately	√	
Disease of suspected bioterrorism origin (including): • Anthrax • Smallpox	Immediately	√	
Disease of suspected foodborne origin (communicable disease clusters only)	Immediately	√	

Notifiable Condition	Time Frame for Notification	Notifiable to Local Health Department	Notifiable to State Department of Health
Disease of suspected waterborne origin (communicable disease clusters only)	Immediately	√	
Enterohemorrhagic *E. coli* (shiga-like toxin producing infections only) such as *E. coli* O157:H7 Infection	Immediately	√	
Giardiasis	Within 3 work days	√	
Gonorrhea	Within 3 work days	√	
Granuloma inguinale	Within 3 work days	√	
Gunshot wounds (nonfatal)	Monthly		√
Haemophilus influenzae (invasive disease, children under age 5)	Immediately	√	
Hantavirus pulmonary syndrome	Within 3 work days	√	
Hemolytic uremic syndrome	Immediately	√	
Hepatitis A (acute infection)	Immediately	√	
Hepatitis B (acute infection)	Within 3 work days	√	
Hepatitis B surface antigen + pregnant women	Within 3 work days	√	
Hepatitis B (chronic) – Initial diagnosis, and previously unreported prevalent cases	Monthly	√	
Hepatitis C – Acute and chronic	Monthly	√	
Hepatitis (infectious), unspecified	Within 3 work days	√	
Human immunodeficiency virus (HIV) infection	Within 3 work days	√	
Legionellosis	Within 3 work days	√	
Leptospirosis	Within 3 work days	√	
Listeriosis	Immediately	√	
Lyme Disease	Within 3 work days	√	
Lymphogranuloma venereum	Within 3 work days	√	
Malaria	Within 3 work days	√	
Measles (rubeola)	Immediately	√	
Meningococcal disease	Immediately	√	
Mumps	Within 3 work days	√	
Paralytic shellfish poisoning	Immediately	√	
Pertussis	Immediately	√	
Pesticide poisoning (hospitalized, fatal, or cluster)	Immediately		√
Plague	Immediately	√	
Poliomyelitis	Immediately	√	
Psittacosis	Within 3 work days	√	
Q Fever	Within 3 work days	√	
Rabies (Confirmed Human or Animal)	Immediately	√	
Rabies (Use of post-exposure prophylaxis)	Within 3 work days	√	
Relapsing fever (borreliosis)	Immediately	√	
Rubella (including congenital rubella syndrome)	Immediately	√	
Salmonellosis	Immediately	√	
Serious adverse reactions to immunizations	Within 3 work days	√	
Shigellosis	Immediately	√	
Syphilis	Within 3 work days	√	
Tetanus	Within 3 work days	√	
Trichinosis	Within 3 work days	√	
Tuberculosis	Immediately	√	
Tularemia	Within 3 work days	√	
Typhus	Immediately	√	
Vibriosis	Within 3 work days	√	

Notifiable Condition	Time Frame for Notification	Notifiable to Local Health Department	Notifiable to State Department of Health
Yellow fever	Immediately	√	
Yersiniosis	Within 3 work days	√	
Other rare diseases of public health significance	Immediately	√	
Unexplained critical illness or death	Immediately	√	

[Statutory Authority: RCW 43.20.050, 70.24.125. 05-03-055, § 246-101-301, filed 1/11/05, effective 2/11/05. Statutory Authority: RCW 43.20.050, 43.70.545, 70.24.125, 70.28.010 and 70.104.030. 00-23-120, § 246-101-301, filed 11/22/00, effective 12/23/00.]

WAC 246-101-305 Duties of the health care facility. Health care facilities shall:

(1) Notify the local health department where the patient resides (in the event that patient residence cannot be determined, notify the local health department where the health care facility is located) regarding:

(a) Cases of notifiable conditions specified as notifiable to the local health department in Table HF-1 that occur or are treated in the health care facility.

(b) Cases of conditions specified as notifiable by the local health officer within that health officer's jurisdiction that occur or are treated in the health care facility.

(c) Suspected cases of notifiable conditions for conditions that are designated immediately notifiable that occur or are treated in the health care facility.

(d) Outbreaks or suspected outbreaks of disease that occur or are treated in the health care facility. These patterns include, but are not limited to, suspected or confirmed outbreaks of chickenpox, influenza, viral meningitis, nosocomial infection suspected due to contaminated products or devices, or environmentally related disease. Reports of outbreaks and suspected outbreaks of disease are to be made to the local health officer.

(e) Known barriers which might impede or prevent compliance with orders for infection control or quarantine; and

(f) Name, address, and other pertinent information for any case, suspected case or carrier refusing to comply with prescribed infection control measures.

(2) Notify the department of health of conditions designated as notifiable to the local health department when:

(a) A local health department is closed or representatives of the local health department are unavailable at the time a case or suspected case of an immediately notifiable condition occurs;

(b) A local health department is closed or representatives of the local health department are unavailable at the time an outbreak or suspected outbreak of communicable disease occurs.

(3) Notify the department as specified in Table HF-1 regarding cases of notifiable conditions specified as notifiable to the department.

(4) Notify the department of cancer incidence as required by chapter 246-430 WAC.

(5) Ensure that positive cultures and preliminary test results for notifiable conditions of specimens referred to laboratories outside of Washington for testing are correctly notified to the correct local health department as specified in Table Lab-1. This requirement can be satisfied by:

(a) Arranging for the referral laboratory to notify either the local health department, the department, or both; or

(b) Receiving the test result from the referral laboratory, and forwarding the notification to the local health department, the department, or both.

(6) Cooperate with public health authorities during investigation of:

(a) Circumstances of a case or suspected case of a notifiable condition or other communicable disease; and

(b) An outbreak or suspected outbreak of disease.

(7) Provide adequate and understandable instruction in disease control measures to each patient who has been diagnosed with a case of a communicable disease, and to contacts who may have been exposed to the disease.

(8) Maintain an infection control program as described in WAC 246-320-265.

(9) Health care facilities may assume the burden of notification for health care providers practicing within the health care facility where more than one health care provider is in attendance for a patient with a notifiable condition.

(10) Health care facilities may not assume the burden of notification for laboratories within the health care facility. Laboratories within a health care facility must submit specimens to the Washington state public health laboratories and notify public health authorities of notifiable conditions as specified in Table Lab-1.

[Statutory Authority: RCW 43.20.050, 43.70.545 and 70.104.030. 00-23-120, § 246-101-305, filed 11/22/00, effective 12/23/00.]

WAC 246-101-310 Means of notification. (1) Conditions designated as:

(a) Immediately notifiable must be reported by telephone or by secure facsimile copy of a written case report to the local health officer or the department as specified in Table HF-1;

(b) Notifiable within three working days must be reported by written case report or secure facsimile copy to the local health officer or department as specified in Table HF-1; and

(c) Notifiable on a monthly basis must be reported by written case report or secure facsimile copy to the local health officer or the department as specified in Table HF-1.

(2) The local health officer may authorize notifications by telephone or secure electronic transmission for cases and suspect cases of notifiable conditions specified as notifiable to local health departments.

(3) The state health officer may authorize notifications by telephone or secure electronic transmission for cases and suspected cases of notifiable conditions specified as notifiable to the department.

[Statutory Authority: RCW 43.20.050, 70.24.125, 70.28.010 and 70.104.-030. 00-23-120, § 246-101-310, filed 11/22/00, effective 12/23/00.]

WAC 246-101-315 Content of notifications. (1) For each condition listed in Table HF-1, health care facilities must provide the following information for each case or suspected case:

(a) Name;

(b) Address;

(c) Telephone number;

(d) Date of birth;

(e) Sex;

(f) Diagnosis or suspected diagnosis of disease or condition;

(g) Pertinent laboratory data (if available);

(h) Name and address or telephone number of the principal health care provider;

(i) Name and address or telephone number of the person providing the report; and

(j) Other information as the department may require on forms generated by the department.

(2) The local health officer or state health officer may require other information of epidemiological or public health value.

[Statutory Authority: RCW 43.20.050, 43.70.545, 70.24.125, 70.28.010 and 70.104.030. 00-23-120, § 246-101-315, filed 11/22/00, effective 12/23/00.]

WAC 246-101-320 Handling of case reports and medical information. (1) All records and specimens containing or accompanied by patient identifying information are confidential.

(2) Personnel in health care facilities who know of a person with a notifiable condition, other than a sexually transmitted disease, shall release identifying information only to other individuals responsible for protecting the health and well-being of the public through control of disease.

(3) Personnel in health care facilities with knowledge of a person with sexually transmitted disease, and following the basic principles of health care providers, which respect the human dignity and confidentiality of patients:

(a) May disclose identity of a person or release identifying information only as specified in RCW 70.24.105; and

(b) Shall under RCW 70.24.105(6), use only the following customary methods for exchange of medical information:

(i) Health care providers may exchange medical information related to HIV testing, HIV test results, and confirmed HIV or confirmed STD diagnosis and treatment in order to provide health care services to the patient.

(ii) This means that information shared impacts the care or treatment decisions concerning the patient; and the health care provider requires the information for the patient's benefit.

(4) Personnel responsible for health care facility management are authorized to permit access to medical information as necessary to fulfill professional duties. Health care facility administrators shall advise those persons permitted access under this section of the requirement to maintain confidentiality of such information as defined under this section and chapter 70.24 RCW. Professional duties means the following or functionally similar activities:

(a) Medical record or chart audits;

(b) Peer reviews;

(c) Quality assurance;

(d) Utilization review purposes;

(e) Research as authorized under chapters 42.48 and 70.02 RCW;

(f) Risk management; and

(g) Reviews required under federal or state law or rules.

(5) Personnel responsible for health care facility management are authorized to permit access to a patient's medical information and medical record by medical staff or health care facility staff to carry out duties required for care and treatment of a patient and the management of medical information and the patient's medical record.

(6) Health care facilities conducting a clinical HIV research project shall report the identity of an individual participating in the project unless:

(a) The project has been approved by an institutional review board; and

(b) The project has a system in place to remind referring health care providers of their reporting obligations under this chapter.

(7) Health care facilities shall establish and implement policies and procedures to maintain confidentiality related to a patient's medical information.

[Statutory Authority: RCW 43.20.050, 43.70.545 and 70.104.030. 00-23-120, § 246-101-320, filed 11/22/00, effective 12/23/00.]

WAC 246-101-401 Notifiable conditions and the responsibilities and duties of others. WAC 246-101-405, 246-101-410, 246-101-415, 246-101-420, and 246-101-425 describe the responsibilities and duties of veterinarians, food service establishments, child day care centers, schools, and the general public regarding notifiable conditions and their obligations to cooperate with public health authorities during the investigation of cases, suspected cases, outbreaks and suspected outbreaks.

[Statutory Authority: RCW 43.20.050. 00-23-120, § 246-101-401, filed 11/22/00, effective 12/23/00.]

WAC 246-101-405 Responsibilities of veterinarians. Veterinarians shall:

(1) Notify the local health officer of any suspected case or suspected outbreak of any disease listed in Table HC-1 that is transmissible from animals to humans. Examples of these zoonotic diseases include:

(a) Anthrax;

(b) Brucellosis;

(c) Encephalitis, viral;

(d) Plague;

(e) Rabies;

(f) Psittacosis;

(g) Tuberculosis; and

(h) Tularemia.

(2) Cooperate with public health authorities in the investigation of cases and suspected cases, or outbreaks and suspected outbreaks of zoonotic disease.

(3) Cooperate with public health authorities in the implementation of infection control measures including isolation and quarantine.

[Statutory Authority: RCW 43.20.050. 00-23-120, § 246-101-405, filed 11/22/00, effective 12/23/00.]

WAC 246-101-410 Responsibilities of food service establishments. The person in charge of a food service establishment shall:

(1) Notify the local health department of potential foodborne disease as required in WAC 246-215-260.

(2) Cooperate with public health authorities in the investigation of cases and suspected cases, or outbreaks and suspected outbreaks of foodborne or waterborne disease. This includes the release of the name and other pertinent information about food handlers diagnosed with a communicable disease as it relates to a foodborne or waterborne disease investigation.

(3) Not release information about food handlers with a communicable disease to other employees or the general public.

[Statutory Authority: RCW 43.20.050. 00-23-120, § 246-101-410, filed 11/22/00, effective 12/23/00.]

WAC 246-101-415 Responsibilities of child day care facilities. Child day care facilities shall:

(1) Notify the local health department of cases or suspected cases, or outbreaks and suspected outbreaks of notifiable conditions that may be associated with the child day care facility.

(2) Consult with a health care provider or the local health department for information about the control and prevention of infectious or communicable disease, as necessary.

(3) Cooperate with public health authorities in the investigation of cases and suspected cases, or outbreaks and suspected outbreaks of disease that may be associated with the child day care facility.

(4) Child day care facilities shall establish and implement policies and procedures to maintain confidentiality related to medical information in their possession.

[Statutory Authority: RCW 43.20.050. 00-23-120, § 246-101-415, filed 11/22/00, effective 12/23/00.]

WAC 246-101-420 Responsibilities of schools. Schools shall:

(1) Notify the local health department of cases or suspected cases, or outbreaks and suspected outbreaks of disease that may be associated with the school.

(2) Cooperate with the local health department in monitoring influenza.

(3) Consult with a health care provider or the local health department for information about the control and prevention of infectious or communicable disease, as necessary.

(4) Cooperate with public health authorities in the investigation of cases and suspected cases, or outbreaks and suspected outbreaks of disease that may be associated with the school.

(5) Personnel in schools who know of a person with a notifiable condition shall release identifying information only to other individuals responsible for protecting the health and well-being of the public through control of disease.

(6) Schools shall establish and implement policies and procedures to maintain confidentiality related to medical information in their possession.

[Statutory Authority: RCW 43.20.050. 00-23-120, § 246-101-420, filed 11/22/00, effective 12/23/00.]

WAC 246-101-425 Responsibilities of the general public. (1) Members of the general public shall:

(a) Cooperate with public health authorities in the investigation of cases and suspected cases, or outbreaks and suspected outbreaks of notifiable conditions or other communicable diseases; and

(b) Cooperate with the implementation of infection control measures, including isolation and quarantine.

(2) Members of the general public may notify the local health department of any case or suspected case, or outbreak or potential outbreak of communicable disease.

[Statutory Authority: RCW 43.20.050. 00-23-120, § 246-101-425, filed 11/22/00, effective 12/23/00.]

WAC 246-101-501 Notifiable conditions and local health departments. This section describes the authorities and responsibilities of local health officers and local health departments in collecting, analyzing, investigating and transmitting case information from notifiable conditions case reports.

[Statutory Authority: RCW 43.20.050. 00-23-120, § 246-101-501, filed 11/22/00, effective 12/23/00.]

WAC 246-101-505 Duties of the local health officer or the local health department. Local health officers or the local health department shall:

(1) Review and determine appropriate action for:

(a) Each reported case or suspected case of a notifiable condition;

(b) Any disease or condition considered a threat to public health; and

(c) Each reported outbreak or suspected outbreak of disease, requesting assistance from the department in carrying out investigations when necessary;

(2) Establish a system at the local health department for maintaining confidentiality of written records and written and telephoned notifiable conditions case reports;

(3) Notify health care providers, laboratories, and health care facilities within the jurisdiction of the health department of requirements in this chapter;

(4) Notify the department of cases of any condition notifiable to the local health department (except animal bites) upon completion of the case investigation;

(5) Distribute appropriate notification forms to persons responsible for reporting;

(6) Notify the principal health care provider, if possible, prior to initiating a case investigation by the local health department.

(7) Carry out the HIV partner notification requirements of WAC 246-100-072.

(8) Allow laboratories to contact the health care provider ordering the diagnostic test before initiating patient contact if requested and the delay is unlikely to jeopardize public health;

(9) Conduct investigations and institute control measures in accordance with chapter 246-100 WAC;

(10) The local health department may adopt alternate arrangements for meeting the reporting requirements under this chapter through cooperative agreement between the local health department and any health care provider, laboratory or health care facility;

(11) Each local health officer has the authority to:

(a) Carry out additional steps determined to be necessary to verify a diagnosis reported by a health care provider;

(b) Require any person suspected of having a reportable disease or condition to submit to examinations required to determine the presence of the disease or condition;

(c) Investigate any case or suspected case of a reportable disease or condition or other illness, communicable or otherwise, if deemed necessary;

(d) Require the notification of additional conditions of public health importance occurring within the jurisdiction of the local health officer.

[Statutory Authority: RCW 70.24.130 and 70.24.380. 05-11-110, § 246-101-505, filed 5/18/05, effective 6/18/05. Statutory Authority: RCW 43.20.-050 (2)(d), 70.05.050 and 70.05.060. 03-06-003, § 246-101-505, filed 2/19/03, effective 2/19/03. Statutory Authority: RCW 43.20.050. 00-23-120, § 246-101-505, filed 11/22/00, effective 12/23/00.]

WAC 246-101-510 Means of notification. Local health departments shall:

(1) Notify the department immediately by telephone or secure electronic data transmission of any notification of a case or suspected case of:

(a) Botulism;

(b) Cholera;

(c) Disease of suspected bioterrorism origin (examples: Anthrax, plague, smallpox);

(d) Hemolytic uremic syndrome;

(e) Measles;

(f) Paralytic shellfish poisoning;

(g) Poliomyelitis; and

(h) Unexplained critical illness or death.

(2) Immediate notifications of cases and suspected cases must include:

(a) Name;

(b) Condition; and

(c) Onset date.

(3) Notify the department immediately by telephone or secure electronic data transmission of any notification of an outbreak or suspected outbreak of foodborne or waterborne or other communicable disease.

(4) For outbreaks or suspected outbreaks of foodborne or waterborne disease, notifications must include:

(a) Organism or suspected organism;

(b) Source or suspected source; and

(c) Number of persons affected.

(5) Submit a written case report either on a form provided by the department or in a format approved by the department for each case of any condition notifiable to the local health department, except animal bites, within seven days of completing the case investigation. The department may waive this requirement if telephone or secure electronic data transmission provided pertinent information.

(6) Local health officials will report asymptomatic HIV infection cases to the department according to a standard code developed by the department.

(7) For any case not immediately notifiable to the department forward pertinent information collected on the case investigation for each case of any condition notifiable to the local health department to the department if the case investigation is not complete within twenty-one days of notification, including:

(a) Name;

(b) Condition or suspected condition;

(c) Source or suspected source; and

(d) Onset date.

(8) Submit a written report on forms provided by the department or in a format approved by the department for an outbreak of any notifiable condition within seven days of completing the investigation. The department may waive this requirement if telephone or secure electronic data transmission provided pertinent information.

[Statutory Authority: RCW 43.20.050, 70.24.125 and 70.28.010. 00-23-120, § 246-101-510, filed 11/22/00, effective 12/23/00.]

WAC 246-101-515 Handling of case reports and medical information. (1) Local health officers or local health departments shall establish and maintain confidentiality procedures related to employee handling of all reports of cases and suspected cases, prohibiting disclosure of report information identifying an individual case or suspected cases except:

(a) To employees of the local health department, or other official agencies needing to know for the purpose of administering public health laws and these regulations;

(b) To health care providers, specific designees of health care facilities, laboratory directors, and others for the purpose of collecting additional information about a case or suspected case as required for disease prevention and control;

(2) Local health officers shall require and maintain signed confidentiality agreements with all health department employees with access to identifying information related to a case or suspected case of a person diagnosed with a notifiable condition. The agreements will be renewed at least annually and will include reference to criminal and civil penalties for violation of chapters 70.02 and 70.24 RCW and other administrative actions that may be taken by the local health department.

(3) Local health departments may release statistical summaries and epidemiological studies based on individual case reports if no individual is identified or identifiable.

[Statutory Authority: RCW 43.20.050. 00-23-120, § 246-101-515, filed 11/22/00, effective 12/23/00.]

WAC 246-101-520 Special conditions—AIDS and HIV. (1) The local health officer and local health department personnel shall maintain individual case reports for AIDS and HIV as confidential records consistent with the requirements of this section. The local health officer and local health department personnel must:

(a) Use identifying information on HIV-infected individuals only:

(i) For purposes of contacting the HIV-positive individual to provide test results and post-test counseling; or

(ii) To contact persons who have experienced substantial exposure, including sex and injection equipment-sharing partners, and spouses; or

(iii) To link with other name-based public health disease registries when doing so will improve ability to provide needed care services and counseling and disease prevention; or

(iv) As specified in WAC 246-100-072; or

(v) To provide case reports to the state health department.

(b) Destroy case report identifying information on asymptomatic HIV-infected individuals received as a result of this chapter within three months of receiving a complete case report, or maintain HIV case reports in secure systems that meet the following standards and are consistent with the 2006 *Security and Confidentiality Guidelines* developed by the Centers for Disease Control and Prevention:

(i) Secure systems must be described in written policies that are reviewed annually by the local health officer;

(ii) Access to case report information must be limited to health department staff who need it to perform their job duties and a current list of these staff must be maintained by the local health officer;

(iii) All physical locations containing electronic or paper copies of surveillance data must be enclosed in a locked, secured area with limited access and not accessible by window;

(iv) Paper copies or electronic media containing surveillance information must be housed inside locked file cabinets that are in the locked, secured area;

(v) A crosscut shredder must be available for destroying information and electronic media must be appropriately sanitized prior to disposal;

(vi) Files or data bases containing confidential information must reside on either stand-alone computers with restricted access or on networked drives with proper access controls, encryption software and firewall protection;

(vii) Electronic communication of confidential information must be protected by encryption standards that are reviewed annually by the local health officer;

(viii) Locking briefcases must be available for transporting confidential information;

(c) If maintaining identifying information on asymptomatic HIV-infected individuals more than ninety days following receipt of a completed case report, cooperate with the department of health in biennial review of system security measures described in (b) of this subsection.

(d) Destroy documentation of referral information established in WAC 246-100-072 containing identities and identifying information on HIV-infected individuals and at-risk partners of those individuals immediately after notifying partners or within three months, whichever occurs first unless such documentation is being used in an investigation of conduct endangering the public health or of behaviors presenting an imminent danger to the public health pursuant to RCW 70.24.022 or 70.24.024.

(e) Not disclose identifying information received as a result of this chapter unless:

(i) Explicitly and specifically required to do so by state or federal law; or

(ii) Authorized by written patient consent.

(2) Local health department personnel are authorized to use HIV identifying information obtained as a result of this chapter only for the following purposes:

(a) Notification of persons with substantial exposure, including sexual or syringe-sharing partners;

(b) Referral of the infected individual to social and health services;

(c) Linkage to other public health data bases, provided that the identity or identifying information on the HIV-infected person is not disclosed outside of the health department; and

(d) Investigations pursuant to RCW 70.24.022 or 70.24.-024.

(3) Public health data bases do not include health professions licensing records, certifications or registries, teacher certification lists, other employment rolls or registries, or data bases maintained by law enforcement officials.

(4) Local health officials will report HIV infection cases to the state health department.

(5) Local health officers must require and maintain signed confidentiality agreements with all health department employees with access to HIV identifying information. These agreements will be renewed at least annually and include reference to criminal and civil penalties for violation of chapter 70.24 RCW and other administrative actions that may be taken by the department.

(6) Local health officers must investigate potential breaches of the confidentiality of HIV identifying information by health department employees. All breaches of confidentiality must be reported to the state health officer or their designee for review and appropriate action.

(7) Local health officers and local health department personnel must assist the state health department to reascertain the identities of previously reported cases of HIV infection.

[Statutory Authority: RCW 70.24.125. 06-16-117, § 246-101-520, filed 8/1/06, effective 9/1/06. Statutory Authority: RCW 70.24.130 and 70.24.-380. 05-11-110, § 246-101-520, filed 5/18/05, effective 6/18/05. Statutory Authority: RCW 43.20.050 and 70.24.125. 00-23-120, § 246-101-520, filed 11/22/00, effective 12/23/00.]

WAC 246-101-525 Special condition—Influenza. Local health departments shall:

(1) Maintain a surveillance system for influenza during the appropriate season which may include:

(a) Monitoring of excess school absenteeism;

(b) Sample check with health care providers, clinics, nursing homes, and hospitals regarding influenza-like illnesses; and

(c) Monitoring of workplace absenteeism and other mechanisms.

(2) Encourage submission of appropriate clinical specimens from a sample of patients with influenza-like illness to the Washington state public health laboratories or other laboratory approved by the state health officer.

[Statutory Authority: RCW 43.20.050. 00-23-120, § 246-101-525, filed 11/22/00, effective 12/23/00.]

WAC 246-101-601 Notifiable conditions and the department of health. This section describes the authorities and responsibilities of the department of health in collecting, analyzing, investigation and transmitting case information from notifiable conditions case reports.

[Statutory Authority: RCW 43.20.050. 00-23-120, § 246-101-601, filed 11/22/00, effective 12/23/00.]

WAC 246-101-605 Duties of the department. The department shall:

(1) Provide consultation and technical assistance to local health departments and the department of labor and industries investigating notifiable conditions reports upon request.

(2) Provide consultation and technical assistance to health care providers, laboratories, health care facilities, and others required to make notifications to public health authorities of notifiable conditions upon request.

(3) Develop and distribute forms for the submission of notifiable conditions data to local health departments, health care providers, laboratories, health care facilities, and others required to make notifications to public health authorities of notifiable conditions.

(4) Maintain a twenty-four hour department telephone number for reporting notifiable conditions.

(5) Develop routine data dissemination mechanisms that describe and analyze notifiable conditions case investigations and data. These may include annual and monthly reports and other mechanisms for data dissemination as developed by the department.

(6) Conduct investigations and institute control measures consistent with those indicated in the seventeenth edition, 2000 of *Control of Communicable Diseases Manual*, edited by James Chin, published by the American Public Health Association (copy is available for review at the department and at each local health department), except:

(a) When superseded by more up-to-date measures; or

(b) When other measures are more specifically related to Washington state.

(7) Document the known environmental, human, and or other variables associated with a case or suspected case of pesticide poisoning.

(8) Report the results of the pesticide investigation to the principal health care provider named in the case report form and to the local health officer in whose jurisdiction the exposure has occurred.

(9) The department may negotiate alternate arrangements for meeting reporting requirements under this chapter through cooperative agreement between the department and any health care provider, laboratory, or health care facility.

(10) The department may consolidate reporting for notifiable conditions from any health care provider, laboratory, or health care facility, and relieve that health care provider, laboratory, or health care facility from reporting directly to each local health department, if the department can provide the report to the local health department within the same time as the local health department would have otherwise received it.

[Statutory Authority: RCW 43.20.050, 43.70.545 and 70.104.030. 00-23-120, § 246-101-605, filed 11/22/00, effective 12/23/00.]

WAC 246-101-610 Handling of case reports and medical information. (1) The state health officer or designee shall establish and maintain confidentiality procedures related to employee handling of all reports of cases and suspected cases, prohibiting disclosure of report information identifying an individual case or suspected cases except:

(a) To employees of the local health department, or other official agencies needing to know for the purpose of administering public health laws and these regulations.

(b) To health care providers, specific designees of health care facilities, laboratory directors, and others for the purpose of collecting additional information about a case or suspected case as required for disease prevention and control.

(2) The department shall require and maintain signed confidentiality agreements with all department employees, contractors, and others with access to identifying information related to a case or suspected case of a person diagnosed with a notifiable condition. These agreements will be renewed at least annually and include reference to criminal and civil penalties for violation of chapters 70.02 and 70.24 RCW and other administrative actions that may be taken by the department.

[Statutory Authority: RCW 43.20.050, 43.70.545 and 70.104.030. 00-23-120, § 246-101-610, filed 11/22/00, effective 12/23/00.]

WAC 246-101-615 Requirements for data dissemination. The department shall:

(1) Distribute periodic epidemiological summary reports and an annual review of public health issues to local health officers and local health departments.

(2) Make available any data or other documentation in its possession for notifiable conditions reported directly to the department to local health officers or their designees upon execution of a data sharing agreement within two days of request.

(3) Periodically distribute statistical summaries and epidemiological studies based on individual case reports if no individual is identified or identifiable.

[Statutory Authority: RCW 43.20.050, 43.70.545 and 70.104.030. 00-23-120, § 246-101-615, filed 11/22/00, effective 12/23/00.]

WAC 246-101-620 Requirements for notification to the department of labor and industries. The department shall:

(1) Make notifiable conditions reports where the department of labor and industries has a lead role in conducting the case investigation available within twenty-four hours of receipt by the department.

(2) Make other data necessary to conduct case investigations or epidemiological summaries available within two days of a request from the department of labor and industries.

(3) Execute a data sharing agreement with the department of labor and industries prior to implementation of this chapter.

[Statutory Authority: RCW 43.20.050, 43.70.545, 70.24.125, 70.28.010 and 70.104.030. 00-23-120, § 246-101-620, filed 11/22/00, effective 12/23/00.]

WAC 246-101-625 Content of notifications to the department of labor and industries. Unless otherwise prohibited by law, the department shall make available any data in its possession in sharing data as described in WAC 246-101-615, 246-101-620, and 246-101-625.

[Statutory Authority: RCW 43.20.050. 00-23-120, § 246-101-625, filed 11/22/00, effective 12/23/00.]

WAC 246-101-630 Special condition—Antibiotic resistant disease. The department shall:

(1) Maintain a surveillance system for monitoring antibiotic resistant disease that may include:

(a) Development of a sentinel network of laboratories to provide information regarding antibiotic resistant disease; and

(b) Sample checks with health care providers, clinics, and hospitals regarding antibiotic resistant disease.

(2) Encourage submission of appropriate clinical specimens from a sample of patients with antibiotic resistant disease to the Washington state public health laboratories or other laboratory approved by the state health officer.

[Statutory Authority: RCW 43.20.050, 43.70.545 and 70.24.125. 00-23-120, § 246-101-630, filed 11/22/00, effective 12/23/00.]

WAC 246-101-635 Special conditions—AIDS and HIV. The following provisions apply for the use of AIDS and HIV notifiable conditions case reports and data:

(1) Department personnel must not disclose identifying information received as a result of receiving information regarding a notifiable conditions report of a case of AIDS or HIV unless:

(a) Explicitly and specifically required to do so by state or federal law; or

(b) Authorized by written patient consent.

(2) Department personnel are authorized to use HIV identifying information received as a result of receiving information regarding a notifiable conditions report of a case of AIDS or HIV only for the following purposes:

(a) Notification of persons with substantial exposure, including sexual or syringe-sharing partners;

(b) Referral of the infected individual to social and health services; and

(c) Linkage to other public health data bases, provided that the identity or identifying information on the HIV-infected person is not disclosed outside of the health department.

(3) For the purposes of this chapter, public health data bases do not include health professions licensing records, certifications or registries, teacher certification lists, other employment rolls or registries, or data bases maintained by law enforcement officials.

(4) The state health officer must require and maintain signed confidentiality agreements with all department employees with access to HIV identifying information. These agreements will be renewed at least annually and include reference to criminal and civil penalties for violation of chapter 70.24 RCW and other administrative actions that may be taken by the department.

(5) The state health officer must investigate potential breaches of the confidentiality of HIV identifying information by department employees. All breaches of confidentiality shall be reported to the state health officer or their authorized representative for review and appropriate action.

(6) The department must maintain all HIV case reports in a name-based surveillance system solely for the purpose of complying with HIV reporting guidelines from the federal Centers for Disease Control and Prevention, and must not disclose or otherwise use any information contained in that system for any other purpose, except as expressly permitted by this section.

(7) Authorized representatives of the department must review available records to reascertain the identities of previously reported cases of asymptomatic HIV infection and retain those cases in a confidential name-based system.

(8) The department must maintain HIV case reports in secure systems that meet the following standards and are consistent with the 2006 *Security and Confidentiality Guidelines* developed by the Centers for Disease Control and Prevention:

(a) Secure systems must be described in written policies that are reviewed annually by the overall responsible party;

(b) Access to case report information must be limited to health department staff who need it to perform their job duties and a current list of these staff must be maintained by the overall responsible party;

(c) All physical locations containing electronic or paper copies of surveillance data must be enclosed in a locked, secured area with limited access and not accessible by window;

(d) Paper copies or electronic media containing surveillance information must be housed inside locked file cabinets that are in the locked, secured area;

(e) A crosscut shredder must be available for destroying information and electronic media must be appropriately sanitized prior to disposal;

(f) Files or data bases containing confidential information must reside on either stand-alone computers with restricted access or on networked drives with proper access controls, encryption software and firewall protection;

(g) Electronic communication of confidential information must be protected by encryption standards that are reviewed annually by the overall responsible party;

(h) Locking briefcases must be available for transporting confidential information.

(9) The state health officer or designee must conduct a biennial review of system security measures described in WAC 246-101-520 (1)(b) at local health jurisdictions that are maintaining records by name.

(10) When providing technical assistance to a local health department, authorized representatives of the department may temporarily and subject to the time limitations in WAC 246-101-520 receive the names of reportable cases of HIV infection for the purpose of partner notification, or special studies. Upon completion of the activities by representatives of the state health department, named information will be provided to the local health department subject to the provisions of WAC 246-101-520.

(11) By December 2007, the state health officer, in cooperation with local health officers, will report to the board on:

(a) The ability of the HIV reporting system to meet surveillance performance standards established by the federal Centers for Disease Control and Prevention;

(b) The cost of the reporting system for state and local health departments;

(c) The reporting system's effect on disease control activities;

(d) The impact of HIV reporting on HIV testing among persons at increased risk of HIV infection; and

(e) The availability of anonymous HIV testing in the state.

(12) The state health officer must provide a report to the state board of health if federal policy no longer requires that HIV surveillance systems be name-based.

[Statutory Authority: RCW 70.24.125. 06-16-117, § 246-101-635, filed 8/1/06, effective 9/1/06. Statutory Authority: RCW 43.20.050, 70.24.125 and 70.28.010. 00-23-120, § 246-101-635, filed 11/22/00, effective 12/23/00.]

WAC 246-101-640 Special condition—Birth defects. The department shall enter into a data sharing agreement with the office of the superintendent of public instruction to access data from data bases maintained by the superintendent containing student health information for the purpose of identifying cases of autism or other conditions of public health interest.

[Statutory Authority: RCW 43.20.050. 00-23-120, § 246-101-640, filed 11/22/00, effective 12/23/00.]

WAC 246-101-701 Notifiable conditions and the department of labor and industries. This section describes the authorities and responsibilities of the department of labor and industries in collecting, analyzing, investigating and transmitting case information from notifiable conditions case reports.

[Statutory Authority: RCW 43.20.050. 00-23-120, § 246-101-701, filed 11/22/00, effective 12/23/00.]

WAC 246-101-705 Duties of the department of labor and industries. (1) The department of labor and industries shall:

(a) Provide consultation and technical assistance to local health departments and the department investigating notifiable conditions reports;

(b) Provide consultation and technical assistance to health care providers, laboratories, health care facilities, and others required to make notifications to public health authorities of notifiable conditions upon request;

(c) Provide technical assistance to businesses and labor organizations for understanding the use of notifiable conditions data collected and analyzed by the department of labor and industries; and

(d) Develop routine data dissemination mechanisms that describe and analyze notifiable conditions case investigations and data. These may include annual and monthly reports and other mechanisms for data dissemination as developed by the department of labor and industries.

(2) The department of labor and industries may receive data through any cooperative relationship negotiated by the department of labor and industries and any health care provider, laboratory, or health care facility.

[Statutory Authority: RCW 43.20.050. 00-23-120, § 246-101-705, filed 11/22/00, effective 12/23/00.]

WAC 246-101-710 Handling of case reports and medical information. (1) The department of labor and industries shall establish and maintain confidentiality procedures related to employee handling of all reports of cases and suspected cases, prohibiting disclosure of report information identifying an individual case or suspected cases except:

(a) To employees of the local health department, the department, or other official agencies needing to know for the purpose of administering public health laws and these regulations; and

(b) To health care providers, specific designees of health care facilities, laboratory directors, and others for the purpose of collecting additional information about a case or suspected case as required for occupational condition prevention and control.

(2) The department of labor and industries shall require and maintain signed confidentiality agreements with all employees, contractors, and others with access to identifying information related to a case or suspected case of a person diagnosed with a notifiable condition. Such agreements will be renewed at least annually and include reference to criminal and civil penalties for violation of chapter 70.02 RCW, other chapters of pertinent state law, and other administrative actions that may be taken by the department of labor and industries.

(3) The department of labor and industries may release statistical summaries and epidemiological studies based on individual case reports if no individual is identified or identifiable.

[Statutory Authority: RCW 43.20.050. 00-23-120, § 246-101-710, filed 11/22/00, effective 12/23/00.]

WAC 246-101-715 Requirements for data dissemination. The department of labor and industries shall:

(1) Distribute periodic epidemiological summary reports and an annual review of public health issues to local health officers and local health departments.

(2) Make available case investigation documentation for notifiable conditions reported directly to the department to local health officers or their designees upon execution of a data sharing agreement.

[Statutory Authority: RCW 43.20.050. 00-23-120, § 246-101-715, filed 11/22/00, effective 12/23/00.]

WAC 246-101-720 Requirements for notification to local health departments. The department of labor and industries shall make data and other pertinent information described in WAC 246-101-715 available to local health departments within two days of a request.

[Statutory Authority: RCW 43.20.050. 00-23-120, § 246-101-720, filed 11/22/00, effective 12/23/00.]

WAC 246-101-725 Requirements for notification to the department of health. The department of labor and industries shall:

(1) Make other data necessary to conduct case investigations or epidemiological summaries available within two days of a request from the department.

(2) Execute a data sharing agreement with the department prior to implementation of this chapter.

[Statutory Authority: RCW 43.20.050. 00-23-120, § 246-101-725, filed 11/22/00, effective 12/23/00.]

WAC 246-101-730 Special condition—Hospitalized burns. The department of labor and industries shall maintain a surveillance system for monitoring hospitalized burns that may include:

(1) Development of a sentinel network of burn treatment centers and hospitals to provide information regarding hospitalized burns; and

(2) Sample checks with health care providers, clinics, and hospitals regarding hospitalized burns.

[Statutory Authority: RCW 43.20.050. 00-23-120, § 246-101-730, filed 11/22/00, effective 12/23/00.]

Chapter 246-102 WAC
CANCER REGISTRY

WAC

246-102-001	Purpose.
246-102-010	Definitions.
246-102-020	Who must report.
246-102-030	Cancer case identification.
246-102-040	Data collection requirements.
246-102-050	Form, frequency, and format for reporting.
246-102-060	Data quality assurance.
246-102-070	Access and release of information.

WAC 246-102-001 Purpose. The purpose of cancer case reporting is to monitor the incidence of cancer in the state. Information collected through the cancer registry system is used by medical, research and public health professionals to understand, control and reduce occurrences of cancer in residents of Washington. This chapter establishes the criteria and procedures for identifying and reporting cancer cases and defines the standards for access and release of cancer information.

[Statutory Authority: RCW 70.54.270, 43.20.050, 43.70.130. 01-04-086, § 246-102-001, filed 2/7/01, effective 3/10/01.]

WAC 246-102-010 Definitions. For the purposes of RCW 70.54.230, 70.54.240, 70.54.250, 70.54.260, 70.54.-270, and this chapter, the following words and phrases shall have the following meaning unless the context clearly indicates otherwise:

(1) "Cancer case" means:

(a) Any malignant neoplasm with the exception of basal and squamous cell carcinoma of the skin;

(b) All brain tumors;

(c) Basal and squamous cell carcinoma of the external genital organ sites (vulva, labia, clitoris, prepuce, penis, scrotum);

(d) Cancer in situ, except carcinoma in situ of the uterine cervix; or

(e) Other diagnoses necessary to meet the reporting requirements of the Center for Disease Control's National Program of Cancer Registries, the National Cancer Institute's Surveillance Epidemiology and End Results Program, the Commission on Cancer, and the North American Association of Central Cancer Registries (a copy is available for review at the department).

(2) "Cancer diagnosis or treatment facilities" means hospitals, surgical centers, outpatient radiation therapy centers, doctors' offices, independent clinical laboratories and any other facilities where cancer cases are diagnosed or treated.

(3) "Confidential information" means any information which could lead to the identification of cancer patients, cancer diagnosis or treatment facilities, independent clinical laboratories, or attending health care providers.

(4) "Contractors" means agencies designated by contract with the department of health to perform activities related to identification, collection, and processing of cancer data.

(5) "Department" means the Washington state department of health.

(6) "Designees" means hospital-based cancer registries and other persons or entities designated by the department to perform data collection activities.

(7) "Hospital-based cancer registry" means a cancer registry which is maintained by a hospital or other health care facility.

(8) "In situ" means tumors described as "in situ" by the pathologist reading the diagnostic report(s).

(9) "Institutional review board" means any board, committee, or other group formally designated by an institution, or authorized under federal or state law, to review, approve the initiation of, or conduct periodic review of research programs to assure the protection of the rights and welfare of human research subjects as defined in RCW 70.02.010.

(10) "Patient" means a case, suspected case or contact.

(11) "Principal health care provider" means the attending health care provider recognized as primarily responsible for diagnosis and treatment of a patient, or in the absence of such, the health care provider initiating diagnostic testing or treatment for the patient.

(12) "Reportable cancer case" means any cancer case diagnosed in a Washington state resident after the effective date of these rules.

(13) "Resident" means an individual residing in Washington state at the time of cancer diagnosis.

(14) "Stage of disease" means a cancer classification system encompassing attributes of a tumor as determined and described by:

(a) *Summary Staging Guide, Surveillance Epidemiology and End Results (SEER), Program, April 1977*; except when superseded by more up-to-date measures (a copy is available for review at the department); and

(b) *Manual for Staging of Cancer, 5th Edition, American Joint Committee on Cancer, (AJCC), 1998*, except when superseded by more up-to-date measures (a copy is available for review at the department).

(15) "State cancer registry" means the statewide cancer data base maintained by the department of health.

(16) "State cancer registry contract" means the legal agreement by which contractors are authorized to obtain information on reportable cancer cases. It also means the document specifying the contractors' obligations to the state cancer registry with respect to how and when information is collected, processed, and provided and how quality assurance standards are met.

[Statutory Authority: RCW 70.54.270, 43.20.050, 43.70.130. 01-04-086, § 246-102-010, filed 2/7/01, effective 3/10/01.]

WAC 246-102-020 Who must report. By statute (RCW 70.54.240), the responsibility for identifying and reporting cases of cancer rests with health care facilities, independent clinical laboratories, and other principal health care providers. The department may, at its discretion, delegate some or all of these responsibilities to contractors or other designees. A list of the contractors and designees responsible for identifying and reporting cases of cancer diagnosed at specific sites in Washington is available for review at the department.

[Statutory Authority: RCW 70.54.270, 43.20.050, 43.70.130. 01-04-086, § 246-102-020, filed 2/7/01, effective 3/10/01.]

WAC 246-102-030 Cancer case identification. (1) Contractors or designees shall identify reportable cancer cases diagnosed and treated at cancer diagnosis and treatment facilities.

(2) Cancer diagnosis or treatment facilities shall:

(a) Organize case finding documents by procedure or service date to permit identification of cancer cases; and

(b) Submit or make available, case finding documents including the following if maintained:

(i) Disease and operation indices for cancer cases;

(ii) Pathology and cytology reports;

(iii) New patient radiation logs;

(iv) New patient chemotherapy logs; and

(v) Other alternative case finding documents that are necessary to identify or verify reportable cancer cases;

(c) Cancer diagnosis or treatment facilities shall submit case finding documents by paper form, computer disk, or electronic file or make batched hard copy documents available for on-site review, within forty-five days of the date of service.

(3) On request, principal health care providers shall identify to contractors, designees, or the department reportable cancer cases diagnosed at facilities other than hospitals, surgical centers, and outpatient radiation therapy centers (as specified under WAC 246-102-030 and 246-102-040) unless the patient was hospitalized for additional cancer diagnosis or treatment services within one month of diagnosis.

[Statutory Authority: RCW 70.54.270, 43.20.050, 43.70.130. 01-04-086, § 246-102-030, filed 2/7/01, effective 3/10/01.]

WAC 246-102-040 Data collection requirements. (1) Contractors or designees shall complete cancer abstracts for patients identified through cancer diagnosis and treatment facilities.

(2) Cancer diagnosis or treatment facilities shall provide contractors or their designees with access to pathology and cytology reports and all medical records pertaining to identified cancer cases.

(3) On request by the contractor, designee or the department, principal health care providers or their staff shall be responsible for completing cancer abstracts for patients diagnosed at facilities other than hospitals, surgical centers, and outpatient radiation therapy centers, unless the patient was hospitalized for additional cancer diagnosis or treatment services within one month of diagnosis.

(4) The following information items shall be included in cancer abstracts, providing the information is available from the patient's medical records:

(a) Patient information:

(i) Name;

(ii) Address at time of diagnosis;

(iii) Sex;

(iv) Race;

(v) Hispanic origin;

(vi) Birthdate;

(vii) Age at time of diagnosis;

(viii) Social Security number;

(ix) State or country of birth;

(x) Usual occupation;

(b) Diagnostic information:

(i) Date first seen for this cancer;

(ii) Primary site or sites;

(iii) Histologic type or types, behavior and grade;

(iv) Date of each diagnosis;

(v) Method or methods of diagnostic confirmation;

(vi) Stage of disease at diagnosis using:

(A) Summary stage; and

(B) AJCC system if maintained by the cancer diagnostic or treatment facility;

(vii) Sequence;

(viii) Laterality;

(c) First course of treatment information:

(i) Date of initial treatment;

(ii) All treatment modalities given as part of first course of therapy;

(d) Other information:

(i) Name and address of cancer diagnosis or treatment facility providing information;

(ii) Medical record number;

(iii) Name and address of principal health care provider; and

(iv) Other items necessary to meet the reporting requirements of the Center for Disease Control's National Program of Cancer Registries, the National Cancer Institute's Surveillance Epidemiology and End Results Program, the Commission on Cancer, and the North American Association of Central Cancer Registries (a copy is available at the department).

(5) The department may require submission of additional information from contractors or designees as needed to assess data reliability and validity.

(6) Contractors shall prepare detailed data collection protocols for inclusion in the state cancer registry contract.

[Statutory Authority: RCW 70.54.270, 43.20.050, 43.70.130. 01-04-086, § 246-102-040, filed 2/7/01, effective 3/10/01.]

WAC 246-102-050 Form, frequency, and format for reporting. (1) Contractors or designees shall:

(a) Prepare electronic data files containing information from cancer abstracts in a format specified by the department; and

(b) Provide electronic files to the state cancer registry at intervals specified by written agreement with the department.

(2) On request by the contractor, designee or the department, principal health care providers shall complete and submit cancer abstracts to contractors, designees, or the department under WAC 246-102-020 and 246-102-030 within sixty days following a patient's cancer diagnosis date if the patient was not hospitalized for a cancer-related diagnosis or treatment within one month of diagnosis.

[Statutory Authority: RCW 70.54.270, 43.20.050, 43.70.130. 01-04-086, § 246-102-050, filed 2/7/01, effective 3/10/01.]

WAC 246-102-060 Data quality assurance. (1) Contractors or designees shall:

(a) Assess the completeness and accuracy of case identification and data collection through computerized edit programs and on-site audits, or make available information and documentation for this purpose; and

(b) Maintain a system for retrieval of completed cancer abstracts for a period up to ten years.

(2) Cancer diagnosis or treatment facilities shall:

(a) Make available to the contractor, designee or the department, all case finding source documents and medical records for data quality assurance activities.

(b) Maintain a system for retrieval of case finding source documents and medical records for a period up to ten years.

(3) The department may require contractors or designees to make available all findings from data quality assurance activities for review and verification.

[Statutory Authority: RCW 70.54.270, 43.20.050, 43.70.130. 01-04-086, § 246-102-060, filed 2/7/01, effective 3/10/01.]

WAC 246-102-070 Access and release of information. (1) Cancer registry information shall be used only for statistical, scientific, medical research and public health purposes. Contractors and designees must comply with chapter 70.02 RCW regarding the disclosure of patient health care information.

(2) The department may release confidential registry information for research purposes after the research project has been reviewed and approved by an institutional review board and a confidentiality agreement is negotiated (a copy of the institutional review board procedures and application are available from the department).

(3) The department may release confidential registry information for projects to assess threats to public health or improve public health practice after the project has been reviewed and approved by the department and a data-sharing agreement is negotiated (a copy of the procedures for data-sharing agreements is available from the department).

(4) Cancer diagnosis or treatment facilities may require contractors or designees to sign an agreement of confidentiality regarding access and release of cancer data and prepare, administer, and maintain confidentiality oaths as needed.

(5) Cancer diagnosis or treatment facilities shall adhere to recommendations in RCW 70.54.260 regarding content of confidentiality agreement if confidentiality agreements are used.

(6) Cancer diagnosis and treatment centers shall make available to cancer patients printed information which describes the purpose of the state cancer registry, the statutory requirements which apply to health care facilities, independent clinical laboratories, and other principal health care providers to identify and report cases of cancer to the state cancer registry, and to protect the confidential information that is reported, the public health and research uses of information in the state cancer registry, the circumstances under which cancer registry information is disclosed for these purposes and the relevant RCW and WAC pertaining to the state cancer registry.

[Statutory Authority: RCW 70.54.270, 43.20.050, 43.70.130. 01-04-086, § 246-102-070, filed 2/7/01, effective 3/10/01.]

Chapter 246-105 WAC

IMMUNIZATION OF CHILD CARE AND SCHOOL CHILDREN AGAINST CERTAIN VACCINE-PREVENTABLE DISEASES

WAC

246-105-010	Purpose.
246-105-020	Definitions.
246-105-030	Vaccine-preventable diseases children must be protected against for full immunization.
246-105-040	Requirements based on national immunization guidelines.
246-105-050	Required documentation of immunization status.
246-105-060	Duties of schools and child care centers.
246-105-070	Duties of health care providers.
246-105-080	Criteria for excluding children from schools or child care centers.
246-105-090	Implementation.

WAC 246-105-010 Purpose. The purpose of this rule is to protect children and the public against certain vaccine-preventable diseases. Under the authority of the board of health, this rule describes the immunization requirements of children attending schools and child care centers.

[Statutory Authority: RCW 28A.210.140. 09-02-003, § 246-105-010, filed 12/26/08, effective 1/26/09.]

WAC 246-105-020 Definitions. For the purposes of this chapter, the words and phrases in this section have the following meanings unless the context clearly indicates otherwise:

(1) "Certificate of exemption (COE)" means a form that is:

(a) Approved by the department and consistent with the requirements of WAC 246-105-050(2); or

(b) An immunization form produced by the state immunization information system.

(2) "Certificate of immunization status (CIS)" means a form that is:

(a) Approved by the department and consistent with the requirements of WAC 246-105-050(1); or

(b) An immunization form produced by the state immunization information system.

(3) "Chief administrator" means:

(a) The person with the authority and responsibility for supervising the immediate operation of a school or child care center; or

(b) A person designated in writing by the statutory or corporate board of directors of the school district or school; or

(c) If (a) and (b) of this subsection do not apply, a person or persons with the authority and responsibility for supervising the general operation of the school district or school.

(4) "Child" means any person regardless of age admitted to:

(a) Any public school district; or

(b) Any private school or private institution subject to approval by the state board of education or described in RCW 28A.305.130 and 28A.195.010 through 28A.195.060; or

(c) Any child care center.

(5) "Child care center" means any licensed facility or center that regularly provides care of children for periods of less than twenty-four hours per day subject to licensure by the department of early learning as described in chapter 43.215 RCW.

(6) "Conditional" means a type of temporary immunization status where a child is not immunized against one or more of the vaccine-preventable diseases required by this chapter for full immunization. A child in this status is allowed to attend a school or child care center provided the child makes satisfactory progress toward full immunization.

(7) "Department" means the department of health.

(8) "Exempt" or "exemption" means a type of immunization status where a child has not been immunized against one or more of the vaccine-preventable diseases required by this chapter for full immunization due to medical, religious, philosophical or personal reasons. A child in this status is allowed to attend a school or child care center only by providing the required COE form.

(9) "Full immunization" or "fully immunized" means an immunization status where a child has provided proof of acquired immunity or has been vaccinated with immunizing agents against each of the vaccine-preventable diseases listed in WAC 246-105-030 according to the national immunization guidelines described in WAC 246-105-040.

(10) "Immunizing agent" means any vaccine or other immunologic drug licensed and approved by the United States Food and Drug Administration (FDA), or meeting World Health Organization (WHO) requirements, for immunization of persons against vaccine-preventable diseases.

(11) "Local health officer" means the individual appointed under chapter 70.05 RCW as the health officer for the local health department, or appointed under chapter 70.08 RCW as the director of public health of a combined city-county or combined county health district.

(12) "National immunization guidelines" means guidelines that are:

(a) Approved by the Advisory Committee on Immunization Practices (ACIP); and

(b) Published in the *Morbidity and Mortality Weekly Report (MMWR)*; and

(c) Consistent with the terms and conditions set forth in WAC 246-105-040.

(13) "Parent" means, for the purposes of signature requirements in this rule:

(a) The mother, father, legal guardian, or any adult *in loco parentis* of a child seventeen years of age or younger; or

(b) A person eighteen years of age or older; or

(c) An emancipated minor.

(14) "Satisfactory progress" for purposes of conditional status or an expired temporary medical exemption means the start or continuance towards full immunization status through the receipt of missing immunizations in a manner consistent with the national immunization guidelines described in WAC 246-105-040 and within the following time frames:

(a) Any missing immunizations must be received within thirty days after the first day of attendance or after a temporary medical exemption is no longer valid, unless receipt within such time is inconsistent with the guidelines.

(b) When the immunizations are part of a series with recommended intervals between doses, each additional missing immunization must be received no later than thirty days past the recommended date of administration of the next dose as established by the guidelines.

(15) "School" means a facility, site, or campus for programs of education as defined in RCW 28A.210.070 to include preschool and kindergarten through grade twelve.

[Statutory Authority: RCW 28A.210.140. 09-02-003, § 246-105-020, filed 12/26/08, effective 1/26/09.]

WAC 246-105-030 Vaccine-preventable diseases children must be protected against for full immunization. In accordance with the conditions of this chapter, a child is required to be vaccinated against, or show proof of acquired immunity for, the following vaccine-preventable diseases before attending school or a child care center:

(1) Diphtheria;
(2) Tetanus;
(3) Pertussis (whooping cough);
(4) Poliomyelitis;
(5) Measles (rubeola);
(6) Mumps;
(7) Rubella;
(8) Hepatitis B;
(9) Haemophilus influenzae type B disease;
(10) Varicella; and
(11) Effective July 1, 2009, pneumococcal.

[Statutory Authority: RCW 28A.210.140. 09-02-003, § 246-105-030, filed 12/26/08, effective 1/26/09.]

WAC 246-105-040 Requirements based on national immunization guidelines. The department shall develop and distribute implementation guidelines for schools and child care centers that are consistent with the national immunization guidelines described in this section and the requirements in WAC 246-105-090.

(1) Unless otherwise stated in this section, a child must be vaccinated against each vaccine-preventable disease listed in WAC 246-105-030 at ages and intervals according to the following published national immunization guidelines:

(a) Effective July 1, 2008, the "*Recommended Immunization Schedule for Persons Aged 0-18 Years, United States, 2007*"; as published in the *Morbidity and Mortality Weekly Report (MMWR)*, 2007;55(51 and 52):Q1-4.

(b) Effective July 1, 2009, the "*Recommended Immunization Schedule for Persons Aged 0-18 Years, United States 2008*"; as published in MMWR 2008;57(01):Q1-4.

(2) In addition to the ages and intervals required by subsection (1) of this section, the following vaccine administration guidelines shall apply. Schools and child care centers may accept one of the following as proof of a child's immunization status against varicella:

(a) Documentation on the CIS form that the child received age appropriate varicella vaccine; or

(b) Diagnosis or verification of a history of varicella disease by a health care provider; or

(c) Diagnosis or verification of a history of herpes zoster by a health care provider; or

(d) Serologic proof of immunity against varicella; or

(e) Documentation by the parent that a child has a history of varicella. This type of proof will be accepted only for certain grade levels described in the department's implementation guidelines according to WAC 246-105-090(2).

[Statutory Authority: RCW 28A.210.140. 09-02-003, § 246-105-040, filed 12/26/08, effective 1/26/09.]

WAC 246-105-050 Required documentation of immunization status. Before a child may attend a school or child care center, a parent must provide proof of immunization status using the following types of documentation:

(1) A department-approved CIS form which must be signed by the parent. The CIS form must include:

(a) Name of child or student;

(b) Birth date;

(c) Type of vaccine(s) administered;

(d) Month, day, and year of each dose of vaccine received;

(e) A section to indicate whether an accompanying COE form has been provided;

(f) A section to document serologic proof of immunity which must be signed by a licensed health provider and include a copy of a lab report; and

(g) Parent signature and date.

(2) A department-approved COE form signed by a parent. A COE form must include:

(a) Name of child or student;

(b) Birth date;

(c) A section to indicate a medical exemption for one or more vaccines which must be signed by a licensed health care provider;

(d) A section to indicate a religious exemption for one or more vaccines;

(e) A section to indicate a personal or philosophical exemption for one or more vaccines;

(f) Notice to parents that if an outbreak of vaccine-preventable disease for which the child is exempted occurs, the child may be excluded from the school or child care center for the duration of the outbreak; and

(g) Parent signature and date.

[Statutory Authority: RCW 28A.210.140. 09-02-003, § 246-105-050, filed 12/26/08, effective 1/26/09.]

WAC 246-105-060 Duties of schools and child care centers. (1) Schools and child care centers shall require:

(a) A CIS form for new enrollees registering for admission into kindergarten through grade twelve or a child care center as a requirement of admission. Information on the CIS is used to determine if a child is fully immunized, conditional or exempt.

(b) For enrollees attending under conditional status, documentation of satisfactory progress toward full immunization.

(c) For enrollees claiming exempt status, a signed COE form indicating a medical, religious, philosophical or personal exemption.

(i) A medical exemption is allowed when a signature of a licensed medical doctor (M.D.), a doctor of osteopathy (D.O.), doctor of naturopathy (N.D.), physician assistant (P.A.), or nurse practitioner (A.R.N.P.), acting within the scope of practice, certifies medical reasons to defer or forego one or more immunizations required for full immunization.

(ii) If immunizations are deferred on a temporary basis for medical reasons, the student must make satisfactory progress toward full immunization once the medical exemption has expired.

(2) In maintaining child immunization records, schools and child care centers shall:

(a) Keep all department-approved forms described in WAC 246-105-050 for each enrolled child attending their school or child care center.

(b) Keep a list of children currently with medical, religious, philosophical, or personal exemptions. This list must be transmitted to the local health department upon request.

(c) Return the department-approved CIS or applicable COE or a legible copy of such documents to the parent if the child is withdrawn from a school or child care center or transferred from the school. A school or child care center may not withhold from the parent a child's department-approved CIS or COE for any reasons, including nonpayment of school or child care center fees.

(d) Provide access to immunization records to agents of the state or local health department of each child enrolled.

(3) In maintaining child immunization records, the chief administrator shall:

(a) Retain records for at least three years on a child who is excluded from school under this chapter. The record must include the child's name, address, and date of exclusion.

(b) Submit an immunization status report under chapter 28A.210 RCW either electronically on the internet or on a form provided by the department. The report must be submitted to the department by November 1 of each year. If a school opens after October 1, the report is due thirty days from the first day of school.

[Statutory Authority: RCW 28A.210.140. 09-02-003, § 246-105-060, filed 12/26/08, effective 1/26/09.]

WAC 246-105-070 Duties of health care providers. Persons or organizations administering immunizations, either public or private, shall:

(1) Furnish each person immunized, or his or her parent, with a written record of immunization containing information required by the state board of health; and

(2) Provide immunizations and records in accordance with chapter 246-100 WAC.

[Statutory Authority: RCW 28A.210.140. 09-02-003, § 246-105-070, filed 12/26/08, effective 1/26/09.]

WAC 246-105-080 Criteria for excluding children from schools or child care centers. For any child excluded under subsection (1), (2), or (3) of this section, schools must use procedures consistent with chapters 180-38 and 392-380 WAC. A school or child care center shall exclude a child if one or more of the following applies:

(1) Parent(s) fail to provide a completed CIS form on or before the child's first day of attendance.

(2) A child attending under conditional status fails to make satisfactory progress toward full immunization.

(3) A child has been admitted under a temporary medical exemption and the particular vaccine for which the exemption was granted is no longer contraindicated and the child fails to make satisfactory progress toward full immunization.

(4) A local health officer excludes a child from school or a child care center under chapter 246-110 WAC during an outbreak of a vaccine-preventable disease if the child has not been fully immunized against that disease due to:

(a) Conditional status;

(b) Medical exemption;

(c) Religious exemption;

(d) Philosophical exemption; or

(e) Personal exemption.

[Statutory Authority: RCW 28A.210.140. 09-02-003, § 246-105-080, filed 12/26/08, effective 1/26/09.]

WAC 246-105-090 Implementation. (1) The department shall develop and distribute implementation guidelines for schools and child care centers that:

(a) Interpret immunization requirements by grade level consistent with the ages specified in the national immunization guidelines and this chapter; and

(b) Reflect national immunization guidelines for children who did not receive required immunizations prior to entry into kindergarten or first grade, and for whom a full series of immunizations is not recommended.

(2) The department may develop school implementation guidelines that waive or modify immunization requirements when a phasing-in period is warranted for a new immunization mandate, when there is limited availability of a required immunizing agent, or when new information about the safety or efficacy of an immunizing agent prompts a reevaluation of an existing vaccination requirement. Any waiver or modification must:

(a) Reflect the best available medical research as indicated by the ACIP or the state health officer recommendation;

(b) Identify a specific vaccine-preventable disease or immunizing agent;

(c) Identify a specific cohort of children by age or grade level;

(d) Be limited in duration; and

(e) Be approved by the board.

[Statutory Authority: RCW 28A.210.140. 09-02-003, § 246-105-090, filed 12/26/08, effective 1/26/09.]

Chapter 246-110 WAC

CONTAGIOUS DISEASE—SCHOOL DISTRICTS AND DAY CARE CENTERS

WAC

246-110-001	Purpose.
246-110-010	Definition.
246-110-020	Control of communicable (contagious) disease.

WAC 246-110-001 Purpose. The following regulations are adopted by the board of health for the purpose of governing the presence on or about any school or day care center premises of susceptible persons who have, or have been exposed to, a communicable disease. These regulations are in addition to other requirements imposed by chapter 246-100 WAC.

In furtherance of the purpose and intent of the law and these regulations, it is recommended that parents of students whose medical supervision seems inadequate should be encouraged to obtain the services of a physician for the child. When the economic situation warrants, the parents should be guided to the appropriate source of community-sponsored medical care. These regulations are not intended to imply that any diagnosis or treatment will be performed by school or day care center personnel.

[Statutory Authority: RCW 43.20.050. 92-02-019 (Order 225B), § 246-110-001, filed 12/23/91, effective 1/23/92; 91-02-051 (Order 124B), recodified as § 246-110-001, filed 12/27/90, effective 1/31/91; 90-21-056 (Order 095), § 248-101-011, filed 10/15/90, effective 10/15/90.]

WAC 246-110-010 Definition. As used in this portion of these regulations, these terms shall mean:

(1) "Contact" means a person exposed to an infected person, animal, or contaminated environment which might provide an opportunity to acquire the infection.

(2) "Exposure" means such association with a person or animal in the infectious stage of a disease, or with a contaminated environment, as to provide the opportunity to acquire the infection.

(3) "Susceptible" means a person who does not possess sufficient resistance, whether natural or induced, to a pathogenic agent or disease to prevent contracting that disease when exposed thereto.

(4) "Communicable disease (contagious disease)" means an illness caused by an infectious agent which can be transmitted from one person, animal, or object to another person by direct or indirect means including transmission via an intermediate host or vector, food, water, or air. Communicable (contagious) diseases include, but are not limited to:

(a) Chickenpox

(b) Conjunctivitis (bacterial)

(c) Diphtheria

(d) Giardiasis

(e) Hepatitis A

(f) Invasive Haemophilus influenza disease (excluding otitis media)

(g) Measles

(h) Meningitis (bacterial)

(i) Mumps

(j) Pediculosis

(k) Pertussis

(l) Rubella

(m) Salmonellosis

(n) Shigellosis

(o) Tuberculosis

(5) "School" means each building, facility, and location at or within which any or all portions of a preschool, kindergarten and grades one through twelve program of education and related activities are conducted for two or more children by or in behalf of any public school district and by or in behalf of any private school or private institution subject to approval by the state board of education.

(6) "Day care center" means an agency which regularly provides care for a group of children for periods of less than twenty-four hours and is licensed pursuant to chapter 74.15 RCW.

(7) "Outbreak" means the occurrence of cases of a disease or condition in any area over a given period of time in excess of the expected number of cases.

[Statutory Authority: RCW 43.20.050. 91-02-051 (Order 124B), recodified as § 246-110-010, filed 12/27/90, effective 1/31/91; 90-21-056 (Order 095), § 248-101-021, filed 10/15/90, effective 10/15/90.]

WAC 246-110-020 Control of communicable (contagious) disease. (1) When there is an outbreak of a contagious disease, as defined in WAC 246-110-010, such that there is the potential for a case or cases within a school or day care

center, the local health officer, if appropriate, after consultation with the secretary of health or designee shall take all medically appropriate actions deemed to be necessary to control or eliminate the spread of the disease, including, but not limited to:

(a) Closing the affected school(s) or day care center(s), or part(s) thereof;

(b) Closing other schools or day care centers in the local health officer's jurisdiction;

(c) Causing the cessation of selected school or day care center activities or functions;

(d) Excluding from schools or day care centers in the local health officer's jurisdiction any students, staff, and volunteers who are infected with, or deemed to be susceptible to, the disease.

(2) Prior to taking action the health officer shall:

(a) Consult with and discuss the ramifications of action with the superintendent of the school district, or the chief administrator of the day care center or their designees on the proposed action; and

(b) Provide the board of directors and the superintendent of the school district or the chief administrator of the day care center a written decision in the form and substance of an order directing them to take action;

(3) Where these actions have been taken, the local health officer shall, in addition:

(a) Set the terms and conditions permitting schools or day care centers to reopen; activities and functions to resume; and excluded students, staff and volunteers to be readmitted; and

(b) Pursue, in consultation with the secretary of health or designee and school and/or day care officials, the investigation of the source of disease, or order those actions necessary to the ultimate control of the disease.

[Statutory Authority: RCW 43.20.050. 92-02-019 (Order 225B), § 246-110-020, filed 12/23/91, effective 1/23/92; 91-02-051 (Order 124B), recodified as § 246-110-020, filed 12/27/90, effective 1/31/91; 90-21-056 (Order 095), § 248-101-221, filed 10/15/90, effective 10/15/90.]

Chapter 246-130 WAC
EARLY INTERVENTION PROGRAM

WAC

246-130-001 What is the early intervention program?
246-130-010 What definitions does the early intervention program use?
246-130-020 What early intervention program services are available?
246-130-030 How does the early intervention program pay a provider or benefits manager?
246-130-040 How do persons with HIV become eligible?
246-130-045 Does an early intervention program client need to notify the department of any changes in their eligibility?
246-130-060 Is information kept confidential?
246-130-080 What do clients do if they disagree with the department's decision about their eligibility or coverage?
246-130-090 How do I contact the department?

DISPOSITION OF SECTIONS FORMERLY CODIFIED IN THIS CHAPTER

246-130-028 What services are not available? [Statutory Authority: RCW 43.70.040 and 43.70.120. 00-19-117, § 246-130-028, filed 9/20/00, effective 10/21/00.] Repealed by 05-23-100, filed 11/17/05, effective 12/18/05. Statutory Authority: RCW 43.70.670.

246-130-050 Transfer of resources without adequate consideration. [Statutory Authority: RCW 43.70.040. 91-02-049 (Order 121), recodified as § 246-130-050, filed 12/27/90, effective 1/31/91. Statutory Authority: RCW 43.70.120. 90-17-087 (Order 071), § 248-168-050, filed 8/17/90, effective 9/17/90. Statutory Authority: RCW 43.20A.550. 87-22-012 (Order 2549), § 248-168-050, filed 10/26/87.] Repealed by 95-23-018, filed 11/7/95, effective 12/8/95. Statutory Authority: RCW 43.70.040 and 43.70.120.

246-130-070 Participation. [Statutory Authority: RCW 43.70.040 and 43.70.120. 95-23-018, § 246-130-070, filed 11/7/95, effective 12/8/95. Statutory Authority: RCW 43.70.040. 91-02-049 (Order 121), recodified as § 246-130-070, filed 12/27/90, effective 1/31/91. Statutory Authority: RCW 43.70.120. 90-17-087 (Order 071), § 248-168-070, filed 8/17/90, effective 9/17/90.] Repealed by 00-19-117, filed 9/20/00, effective 10/21/00. Statutory Authority: RCW 43.70.040. and 43.70.120.

WAC 246-130-001 What is the early intervention program? The early intervention program of HIV client services' mission is to reduce the transmission and medical consequences of HIV by assuring that persons eligible for the early intervention program in Washington have access to available health care and supportive services.

The early intervention program provides treatment of HIV infection to eligible clients based on available funds. The department provides these early intervention services to improve public health by treating people living with HIV, its complications, and side effects of HIV treatment, and in order to decrease the risk of clients with HIV infecting others. Information on how to contact this program is in WAC 246-130-090.

[Statutory Authority: RCW 43.70.670. 05-23-100, § 246-130-001, filed 11/17/05, effective 12/18/05. Statutory Authority: RCW 43.70.040 and 43.70.120. 00-19-117, § 246-130-001, filed 9/20/00, effective 10/21/00; 95-23-018, § 246-130-001, filed 11/7/95, effective 12/8/95. Statutory Authority: RCW 43.70.040. 91-02-049 (Order 121), recodified as § 246-130-001, filed 12/27/90, effective 1/31/91. Statutory Authority: RCW 43.70.120. 90-17-087 (Order 071), § 248-168-010, filed 8/17/90, effective 9/17/90. Statutory Authority: RCW 43.20A.550. 87-22-012 (Order 2549), § 248-168-010, filed 10/26/87.]

WAC 246-130-010 What definitions does the early intervention program use? The following words and phrases have the following meaning in chapter 246-130 WAC:

(1) **"AIDS"** means acquired immunodeficiency syndrome.

(2) **"Applicant"** means a person applying for early intervention program services.

(3) **"Benefits manager"** means:

(a) The pharmacy benefits manager contracted with the department to provide prescription drug claim processing and formulary management services; or

(b) The insurance benefits manager contracted with the department to provide insurance premium assistance through the HIV insurance program and the medicare premium assistance program.

(4) **"Client"** means a person who the department determines is currently eligible for early intervention program services.

(5) **"Department"** means the Washington state department of health.

(6) **"Early intervention program services"** means medically necessary treatment and services that reduce the rate of progression of HIV infection and HIV transmission.

This includes behavioral risk reduction interventions. See WAC 246-130-020 for details.

(7) **"Federal poverty level"** means the official income level for poverty released by the federal government each year in February.

(8) **"Formulary"** means the list of prescription drugs that the early intervention program will pay for. To obtain a copy of that list, see WAC 246-130-090.

(9) **"HIV"** means human immunodeficiency virus as defined in RCW 70.24.017(7).

(10) **"HIV insurance program"** means the program that provides health insurance coverage for individuals with HIV who are not eligible for medical assistance programs from the department of social and health services. Medical assistance program is defined in RCW 74.9.010(8). Individuals must meet the eligibility requirements established by the department.

(11) **"Medicare premium assistance"** means the program that pays premiums, copayments and deductibles for department clients receiving medicare and enrolled in the prescription drug program.

(12) **"Provider"** means a health care professional contracted by the department to supply medical, dental, or laboratory services to a client.

(13) **"Schedule of services"** means the department's list of medical, dental, and laboratory services covered by its early intervention program. To obtain a copy of that list, see WAC 246-130-090.

(14) **"Standard of care"** means treatment for HIV that is commonly accepted by the local medical community.

(15) **"Steering committee"** means the department's early intervention steering committee. This advisory committee serves at the pleasure of the department secretary in accordance with RCW 43.70.040(2). The committee consists of Washington state residents living with HIV, HIV medical experts, and representatives from community organizations. The steering committee advises the department on its early intervention program.

[Statutory Authority: RCW 43.70.670. 05-23-100, § 246-130-010, filed 11/17/05, effective 12/18/05. Statutory Authority: RCW 43.70.040 and 43.70.120. 00-19-117, § 246-130-010, filed 9/20/00, effective 10/21/00; 95-23-018, § 246-130-010, filed 11/7/95, effective 12/8/95. Statutory Authority: RCW 43.70.120. 92-02-018 (Order 224), § 246-130-010, filed 12/23/91, effective 1/23/92. Statutory Authority: RCW 43.70.040. 91-02-049 (Order 121), recodified as § 246-130-010, filed 12/27/90, effective 1/31/91. Statutory Authority: RCW 43.70.120. 90-17-087 (Order 071), § 248-168-015, filed 8/17/90, effective 9/17/90.]

WAC 246-130-020 What early intervention program services are available? Services to treat HIV are available from the department, based on available funding, to eligible clients as described in this section.

(1) The department decides what specific medical, laboratory, dental, prescription medication and insurance services to cover after actively consulting with its steering committee and considering:

(a) Support of the steering committee;

(b) FDA approval for prescription medications;

(c) Standard of care recognized by the medical community;

(d) Effectiveness in treatment for HIV, complications of HIV, side effects of current treatments for HIV or support for HIV treatment adherence; and

(e) Relative cost of services.

(2) The early intervention program services described in this section are available to all clients, unless they receive those services from other sources. Specific services of this section are available for a client only when medically necessary to treat HIV and associated diseases, complications of treating HIV, or support for HIV treatment adherence.

(3) Specific covered medical, laboratory, and dental services are listed in the department's "schedule of services."

(4) Prescription drugs covered are listed in the department's "early intervention drug formulary."

(5) HIV insurance program includes:

(a) Premium payment or assistance as authorized in RCW 43.70.670;

(b) Deductible payment up to a limit determined by the early intervention program within a twelve-month period; and

(c) Co-pay payment for third-party insurance as follows:

(i) The percentage of prescription medication costs covered by the department and not covered by third-party insurers; and

(ii) Fixed dollar co-pay required by a client's third-party insurance plan for prescription medication covered by the early intervention program.

(6) Medicare premium assistance will pay premiums, copayment and deductibles for early intervention program clients on medicare who request assistance for the prescription drug program.

(7) The department may also coordinate other services to treat HIV and AIDS. These are available as funding and contracting permit. For example, as of July 1, 2000, the department may pay toward the spend-down for medically needy (MN) clients who are also early intervention program clients.

(8) The early intervention program will provide written notification to clients, providers, and the steering committee at least thirty days in advance of any reduction in service or payments.

(9) You may contact the department per WAC 246-130-090 to make comments on service coverage or to receive information.

[Statutory Authority: RCW 43.70.670. 05-23-100, § 246-130-020, filed 11/17/05, effective 12/18/05. Statutory Authority: RCW 43.70.040 and 43.70.120. 00-19-117, § 246-130-020, filed 9/20/00, effective 10/21/00; 95-23-018, § 246-130-020, filed 11/7/95, effective 12/8/95. Statutory Authority: RCW 43.70.040. 91-02-049 (Order 121), recodified as § 246-130-020, filed 12/27/90, effective 1/31/91. Statutory Authority: RCW 43.70.120. 90-17-087 (Order 071), § 248-168-020, filed 8/17/90, effective 9/17/90. Statutory Authority: RCW 43.20A.550. 87-22-012 (Order 2549), § 248-168-020, filed 10/26/87.]

WAC 246-130-030 How does the early intervention program pay a provider or benefits manager? The department pays a provider or benefits manager for covered services delivered to clients, as limited by this section.

(1) The department pays a provider or benefits manager who contracts with the department for services described in WAC 246-130-020.

(a) The department will only pay for services delivered by a contracted provider or benefits manager.

(b) A provider or benefits manager must bill the department according to the procedure and terms of the contract.

(c) The department only pays for covered, medically necessary early intervention program services delivered to clients who are eligible under WAC 246-130-040.

(2) Payment of services depends on availability of federal and state funds. The department will not deny payment of any individual claim for funding availability unless the department denies an entire class of claims, or an entire program.

(3) A provider or benefits manager who disputes a payment may do so through the contracts process specified in WAC 246-130-080(3).

(4) The department is payer of last resort.

(a) A provider or benefits manager must bill all other third-party sources prior to billing the department for covered services; and

(b) A provider or benefits manager must reimburse the department for any funds paid by the department, which were actually reimbursed by other sources.

[Statutory Authority: RCW 43.70.670. 05-23-100, § 246-130-030, filed 11/17/05, effective 12/18/05. Statutory Authority: RCW 43.70.040 and 43.70.120. 00-19-117, § 246-130-030, filed 9/20/00, effective 10/21/00; 95-23-018, § 246-130-030, filed 11/7/95, effective 12/8/95. Statutory Authority: RCW 43.70.120. 92-02-018 (Order 224), § 246-130-030, filed 12/23/91, effective 1/23/92. Statutory Authority: RCW 43.70.040. 91-02-049 (Order 121), recodified as § 246-130-030, filed 12/27/90, effective 1/31/91. Statutory Authority: RCW 43.70.120. 90-17-087 (Order 071), § 248-168-030, filed 8/17/90, effective 9/17/90. Statutory Authority: RCW 43.20A.550. 87-22-012 (Order 2549), § 248-168-030, filed 10/26/87.]

WAC 246-130-040 How do persons with HIV become eligible? (1) The department establishes the criteria for determining client eligibility for the early intervention program by consulting with the early intervention steering committee and other interested parties. The department reviews each client's application against the criteria set out in this section.

(2) An applicant is eligible for twelve months of early intervention program services beginning the first of the month that the applicant's completed application was postmarked.

(3) The department requires the following documentation:

(a) A medical diagnosis of HIV;

(b) A Washington state address;

(c) Verification of income, that is equal to or less than the limit set by the early intervention program. Income includes:

(i) Wages, salary, overtime, tips, and bonuses;

(ii) Social Security, trust funds for disability, or other disability insurance payments;

(iii) Unemployment benefits;

(iv) Veteran's Administration benefits;

(v) Lump sum payments of gifts, cash inheritance, property, lottery winnings, worker's compensation for lost income, or severance pay;

(vi) Private pensions, annuities, or royalties; and

(vii) Investment dividends.

(4) The department also considers the following when determining client eligibility:

(a) Client resources: A client must have current resources of less than or equal to the limit set by the early intervention program. Resources include trust funds, and any other financial resources available to the applicant. The department does not count the following as resources:

(i) One home, defined as real property owned by the client as his or her principal place of residence in Washington state, together with surrounding property not to exceed five acres;

(ii) Commercial property, or property used for producing income, up to the first twenty thousand dollars of value;

(iii) Household furnishings;

(iv) One automobile; or

(v) Pensions and other Internal Revenue Service designated retirement accounts; or

(vi) Burial plots or prepaid funeral arrangements.

(b) Client ineligibility for medical benefits through the department of social and health services. If a client is eligible for medical benefits through the department of social and health services, he or she may not qualify for the early intervention program, except when the department is coordinating other services as specified in WAC 246-130-020(6).

(5) Individuals transitioning from any correctional institute are eligible for service that will assist them to access medication once they are released from the facility.

(6) Refer to the HIV client services web page through DOH WEB (A-Z) at www.doh.wa.gov.

[Statutory Authority: RCW 43.70.670. 05-23-100, § 246-130-040, filed 11/17/05, effective 12/18/05. Statutory Authority: RCW 43.70.040 and 43.70.120. 00-19-117, § 246-130-040, filed 9/20/00, effective 10/21/00; 95-23-018, § 246-130-040, filed 11/7/95, effective 12/8/95. Statutory Authority: RCW 43.70.120. 92-02-018 (Order 224), § 246-130-040, filed 12/23/91, effective 1/23/92. Statutory Authority: RCW 43.70.040. 91-02-049 (Order 121), recodified as § 246-130-040, filed 12/27/90, effective 1/31/91. Statutory Authority: RCW 43.70.120. 90-17-087 (Order 071), § 248-168-040, filed 8/17/90, effective 9/17/90. Statutory Authority: RCW 43.20A.550. 87-22-012 (Order 2549), § 248-168-040, filed 10/26/87.]

WAC 246-130-045 Does an early intervention program client need to notify the department of any changes in their eligibility? (1) Clients must notify the department of any changes that affect their eligibility within twenty days of the change.

(2) Clients who do not notify the department of changes may be disenrolled and required to repay the funds spent on their services.

(3) Clients may be disenrolled from the program if they provide false information.

[Statutory Authority: RCW 43.70.670. 05-23-100, § 246-130-045, filed 11/17/05, effective 12/18/05.]

WAC 246-130-060 Is information kept confidential? Applicant and client information supplied to the early intervention program is confidential. The early intervention program follows all applicable state and federal laws regarding the exchange of medical information.

[Statutory Authority: RCW 43.70.670. 05-23-100, § 246-130-060, filed 11/17/05, effective 12/18/05. Statutory Authority: RCW 43.70.040 and 43.70.120. 00-19-117, § 246-130-060, filed 9/20/00, effective 10/21/00; 95-23-018, § 246-130-060, filed 11/7/95, effective 12/8/95. Statutory Authority: RCW 43.70.040. 91-02-049 (Order 121), recodified as § 246-130-060, filed 12/27/90, effective 1/31/91. Statutory Authority: RCW 43.70.120. 90-17-087 (Order 071), § 248-168-060, filed 8/17/90, effective 9/17/90. Statutory Authority: RCW 43.20A.550. 87-22-012 (Order 2549), § 248-168-060, filed 10/26/87.]

WAC 246-130-080 What do clients do if they disagree with the department's decision about their eligibility or coverage? Applicants and clients may appeal any decision by the department about their early intervention program eligibility or coverage.

(1) Chapter 246-10 WAC details the adjudication process for matters involving receipt of benefits. The department will provide information on the cause for denied benefits, how a proceeding may be requested, the forms necessary to request a proceeding and information on required time frames.

(2) Applicants and clients may not appeal the department's denial or limitations when the department discontinues or limits an early intervention program service to either funding availability or federal or state law or rule changes. See WAC 246-130-030(3) for more details.

(3) Rate and payment disputes between a provider or benefits manager and the department are handled by contract.

(4) Clients of any other public agency must use that agency's process to resolve eligibility or other disputes regarding that agency.

[Statutory Authority: RCW 43.70.670. 05-23-100, § 246-130-080, filed 11/17/05, effective 12/18/05. Statutory Authority: RCW 43.70.040 and 43.70.120. 00-19-117, § 246-130-080, filed 9/20/00, effective 10/21/00.]

WAC 246-130-090 How do I contact the department? For information or application, contact:

Department of Health
Client Services
P.O. Box 47841
Olympia, WA 98504-7841
Telephone 1-877-376-9316 Option 2

Or, visit the web site at www.doh.wa.gov. Locate HIV client services through the "DOH WEB (A-Z)" at www.doh.wa.gov.

[Statutory Authority: RCW 43.70.670. 05-23-100, § 246-130-090, filed 11/17/05, effective 12/18/05. Statutory Authority: RCW 43.70.040 and 43.70.120. 00-19-117, § 246-130-090, filed 9/20/00, effective 10/21/00.]

Chapter 246-136 WAC

HUMAN IMMUNODEFICIENCY VIRUS (HIV) INFECTION—OCCUPATIONAL EXPOSURE NOTIFICATION

WAC

246-136-001	Purpose.
246-136-010	Definitions.
246-136-020	Agreements between local health jurisdictions and local jails.
246-136-030	Duties of local jail administrators.
246-136-040	Duties of health officers.

WAC 246-136-001 Purpose. These regulations establish procedures to assure effective communication between health officials and correctional and jail health care administrators or infection control coordinators in the event a correctional or jail staff member is substantially exposed to the bodily fluids of an offender or detainee in the course of their official duties.

[Statutory Authority: RCW 70.24.107. 97-22-027, § 246-136-001, filed 10/29/97, effective 11/29/97.]

WAC 246-136-010 Definitions. The following definitions apply in the interpretation and enforcement of chapter 246-136 WAC:

(1) "HIV" means human immunodeficiency virus.

(2) "Local health department" means the city, town, county, or district agency providing public health services to persons within the area, as provided in chapters 70.05, 70.08 and 70.46 RCW.

(3) "Local health officer" means the individual appointed under chapter 70.05 RCW as the health officer for the local health department, or appointed under chapter 70.08 RCW as the director of public health of a combined city-county health department.

(4) "Local jail administrator" means the individual appointed to operate a jail facility as defined in RCW 70.48.-020.

(5) "State health officer" means the person designated by the secretary of the department of health to serve as statewide health officer, or, in the absence of such designation, the person having primary responsibility for public health matters in the state.

[Statutory Authority: RCW 70.24.107. 97-22-027, § 246-136-010, filed 10/29/97, effective 11/29/97.]

WAC 246-136-020 Agreements between local health jurisdictions and local jails. By November 1, 1997, local health officials and local jail administrators shall establish interagency agreements to include at a minimum:

(1) The title of the official in the local health department assigned the duty for disclosing sexually transmitted disease information as required by RCW 70.24.105 (4)(b) and the title of the health care administrator or infection control coordinator in the local jail assigned the duty of receiving of such information;

(2) A statement indicating that sexually transmitted disease status information is confidential and that release of such information is governed by law;

(3) The title of the person in the local jail or local health jurisdiction assigned the duty for disclosing sexually transmitted disease information or other communicable disease information to the exposed jail staff member in accordance with RCW 70.24.105 (4)(d);

(4) The anticipated number of days or hours from the time:

(a) That a member of a jail staff has been possibly substantially exposed to the bodily fluids of a detained person to the time that report has been provided to the local health officer;

(b) That such a report has been received by the local health officer to the time that a determination of substantial exposure has been made and, if appropriate, the detained person is ordered to be tested for HIV;

(c) That mandated or other known HIV test results and other communicable disease information is disclosed only as permitted by law to the exposed jail staff person, after the detained person has been ordered to be tested for HIV; and

(d) That the results of a new HIV test done as a result of the exposure is disclosed to the exposed jail staff person, after the detained person has been ordered to be tested for HIV;

(5) The title and position of the position responsible for submitting to the department of health by December 1, 1997, a report to include:

(a) The number of negative, positive and other HIV test results disclosed to department of corrections health staff or local jail health staff as required by RCW 70.24.105 (4)(a) and (b);

(b) A listing, without jail staff or detainee identifying information, of the requests for determination of substantial exposure, the determination made and the circumstances of the exposure, and the information disclosed to the exposed jail staff person from existing records, and information disclosed to the exposed jail staff person as a new HIV or other testing.

[Statutory Authority: RCW 70.24.107. 97-22-027, § 246-136-020, filed 10/29/97, effective 11/29/97.]

WAC 246-136-030 Duties of local jail administrators. Local jail administrators shall:

(1) Develop communicable disease prevention guidelines as required by chapter 70.48 RCW that are consistent with chapter 246-100 WAC, WAC 296-62-08001 and the most recent edition of *Control of Communicable Diseases in Man*;

(2) Submit those communicable disease prevention guidelines to the local health officer for review and comment;

(3) Develop and implement policies and procedures for the distribution of communicable disease prevention guidelines to all jail staff who are at risk of occupational exposure to communicable diseases; and

(4) By November 1, 1997, submit to the department of health a summary of changes in polices and procedures as a result of chapter 345, Laws of 1997.

[Statutory Authority: RCW 70.24.107. 97-22-027, § 246-136-030, filed 10/29/97, effective 11/29/97.]

WAC 246-136-040 Duties of health officers. State and local health officers shall:

(1) Comply with the provisions of RCW 70.24.105(4);

(2) Make available the sexually transmitted disease status of a department of corrections offender who has had a mandatory test conducted pursuant to RCW 70.24.340(1), 70.24.360, or 70.24.370 to the department of corrections health care administrator or infection control coordinator identified above;

(3) Make available the sexually transmitted disease status of a person detained in a jail who has had a mandatory test conducted pursuant to RCW 70.24.340(1), 70.24.360, or 70.24.370 as per the interagency agreement in WAC 246-136-020; and

(4) Submit a copy of the interagency agreement required under WAC 246-136-020 to the Department of Health, Post Office Box 47840, Olympia, WA 98504-7840 upon execution or amendment of the agreement.

[Statutory Authority: RCW 70.24.107. 97-22-027, § 246-136-040, filed 10/29/97, effective 11/29/97.]

Chapter 246-138 WAC

TESTING OF GOOD SAMARITANS FOR CERTAIN INFECTIOUS DISEASES

WAC

246-138-001	Purpose.
246-138-010	Definitions.
246-138-020	How is a good samaritan eligible for no cost testing for certain infectious diseases?
246-138-030	What are the duties and responsibilities of the local health department?
246-138-040	Limitations.

WAC 246-138-001 Purpose. The purpose of this rule is to ensure eligible good samaritans may receive testing for certain infectious diseases at no cost to the good samaritan.

[Statutory Authority: 1999 c 391 § 2. 00-01-066, § 246-138-001, filed 12/13/99, effective 1/13/00.]

WAC 246-138-010 Definitions. The following definitions apply throughout this chapter unless the context clearly indicates otherwise.

(1) "Certain infectious diseases" means hepatitis A virus (HAV), hepatitis B virus (HBV), hepatitis C virus (HCV), and human immunodeficiency virus (HIV).

(2) "Good samaritan" means a person rendering emergency care or transportation as described in RCW 4.24.300 and 4.24.310.

(3) "Local health department" means the city, town, county, or district agency providing public health services to persons within the area, as provided in chapters 70.05 and 70.08 RCW.

(4) "Local health officer" means the individual appointed under chapter 70.05 RCW as the health officer for the local health department, or appointed under chapter 70.08 RCW as the director of public health of a combined city-county health department.

(5) "Exchange of bodily fluids significantly increasing the odds of being exposed to a deadly infectious disease":

(a) For HBV, HCV, and HIV means physical contact resulting in exposure presenting possible risk, limited to:

(i) A physical assault upon the exposed person involving blood or semen;

(ii) Intentional, unauthorized, nonconsensual use of needles or sharp implements to inject or mutilate the exposed person;

(iii) An accidental parenteral or mucous membrane or nonintact skin exposure to blood, semen, or vaginal fluids; or

(iv) For HBV only, mucous membrane or nonintact skin exposure to saliva; or

(b) For HAV means physical contact resulting in oral exposure of the good samaritan to the feces of the person she/he was assisting.

[Statutory Authority: 1999 c 391 § 2. 00-01-066, § 246-138-010, filed 12/13/99, effective 1/13/00.]

WAC 246-138-020 How is a good samaritan eligible for no cost testing for certain infectious diseases? To receive no cost testing, a good samaritan must:

(1) Seek testing from the local health department of the county of her or his residence within thirty days of the exchange of bodily fluids significantly increasing the odds of being exposed to a deadly infectious disease;

(2) Have sustained an exchange of bodily fluids significantly increasing the odds of being exposed to a deadly infectious disease as determined by the local health officer or authorized representative, while rendering emergency care or transportation; and

(3) Be uninsured or have health insurance that does not cover most of the costs of testing.

[Statutory Authority: 1999 c 391 § 2. 00-01-066, § 246-138-020, filed 12/13/99, effective 1/13/00.]

WAC 246-138-030 What are the duties and responsibilities of the local health department? Local health departments, during regular hours of operation shall:

(1) Determine whether the good samaritan has sustained an exchange of bodily fluids significantly increasing the odds of being exposed to a deadly infectious disease;

(2) Determine which certain infectious diseases or other infectious diseases are appropriate to test for, which tests should be done and when the tests should be done, based on the nature and time of the exchange of bodily fluids significantly increasing the odds of being exposed to a deadly infectious disease and the natural history of infection for the diseases in question;

(3) Offer counseling and testing, consistent with recommendations in the sixteenth edition 1995 of *Control of Communicable Diseases Manual*, edited by Abram S. Benenson, published by the American public health association, for those infectious diseases to which the good samaritan is determined to have sustained an exchange of bodily fluids significantly increasing the odds of being exposed to a deadly infectious disease;

(4) Obtain the informed consent of the good samaritan prior to testing;

(5) Provide the good samaritan with the results of the testing and the possible need for retesting;

(6) Refer the good samaritan to an appropriate health care provider for any subsequent needed care in the event of a positive test; and

(7) Maintain the confidentiality of those medical records as required by chapters 70.24 RCW and 246-100 WAC.

[Statutory Authority: 1999 c 391 § 2. 00-01-066, § 246-138-030, filed 12/13/99, effective 1/13/00.]

WAC 246-138-040 Limitations. Nothing in this chapter requires a local health department to provide health care services beyond the counseling, testing, and referral described in this chapter.

[Statutory Authority: 1999 c 391 § 2. 00-01-066, § 246-138-040, filed 12/13/99, effective 1/13/00.]

Chapter 246-140 WAC

BLOODBORNE PATHOGENS IN CHILDREN PLACED IN OUT-OF-HOME CARE

WAC

246-140-001 Purpose.
246-140-010 Definition.
246-140-020 Disclosure of information.

WAC 246-140-001 Purpose. These regulations define the term "bloodborne pathogens" solely for use by the department of social and health services when placing a child in out-of-home care pursuant to RCW 74.13.289.

[Statutory Authority: RCW 74.13.289. 05-04-112, § 246-140-001, filed 2/2/05, effective 3/5/05.]

WAC 246-140-010 Definition. The term "bloodborne pathogen" means pathogenic microorganisms that are present in human blood and can cause disease in humans including: Arboviral infections; babesiosis; brucellosis; Creutzfeldt-Jakob disease; hepatitis B virus (HBV); hepatitis C virus (HCV); human immunodeficiency virus (HIV); human T-lymphotrophic virus Type I; leptospirosis; malaria; relapsing fever; syphilis; viral hemorrhagic fever.

[Statutory Authority: RCW 74.13.289. 05-04-112, § 246-140-010, filed 2/2/05, effective 3/5/05.]

WAC 246-140-020 Disclosure of information. Disclosure of information related to HIV and other sexually transmitted diseases must be in accordance with RCW 70.24.105.

[Statutory Authority: RCW 74.13.289. 05-04-112, § 246-140-020, filed 2/2/05, effective 3/5/05.]

Chapter 246-145 WAC

ELECTROLOGY AND TATTOOING STANDARDS FOR STERILIZATION PROCEDURES AND INFECTION CONTROL

WAC

246-145-001 Purpose and scope.
246-145-010 Definitions.
246-145-020 Standard universal precautions for preventing the spread of disease.
246-145-030 Sterile procedures.
246-145-040 Penalty for not complying with rules.

WAC 246-145-001 Purpose and scope. These rules establish standard universal precautions for preventing the spread of diseases by using sterilization procedures and infection control in the commercial practices of electrology and tattooing.

[Statutory Authority: RCW 70.54.340. 02-11-109, § 246-145-001, filed 5/20/02, effective 6/20/02.]

WAC 246-145-010 Definitions. For the purpose of these rules, the following words and phrases have the following meanings unless the context clearly indicates otherwise.

(1) "Electrologist" means a person who practices the business of electrology for a fee.

(2) "Electrology" means the process of permanently removing hair by using solid needle or probe electrode epilation, including:

(a) Thermolysis, being of shortwave, high frequency type;

(b) Electrolysis, being a galvanic type; or

(c) A combination of both which is accomplished by a superimposed or sequential blend.

(3) "Gloves" means medical grade gloves that are FDA approved.

(4) "Sterilization" means a process that destroys all forms of microbial life, including highly resistant bacterial spores.

(5) "Tattoo artist" means a person who practices the business of tattooing for a fee.

(6) "Tattooing" means the indelible mark, figure, or decorative design introduced by insertion of nontoxic dyes or pigments into or under the subcutaneous portion of the skin upon the body of a live human being for cosmetic or figurative purposes.

[Statutory Authority: RCW 70.54.340. 02-11-109, § 246-145-010, filed 5/20/02, effective 6/20/02.]

WAC 246-145-020 Standard universal precautions for preventing the spread of disease. (1) Electrologists - The following universal precautions must be used by electrologists in the care of all clients.

(a) Wash hands with soap and water immediately before and after each client contact;

(b) Wash hands and other skin surfaces immediately and thoroughly if contaminated with blood or other body fluids;

(c) Wash hands immediately before fresh, unused gloves are put on and after gloves are removed;

(d) Clean the client's skin by applying an antiseptic or antibacterial solution prior to and following treatment;

(e) Wear fresh, unused gloves with each client to prevent skin and mucous membrane exposure contact with blood or other body fluids of each client;

(f) Wear gloves for touching blood and body fluids, mucous membranes, or nonintact skin of all clients, and for handling items or surfaces soiled with blood or body fluids;

(g) Change gloves after contact with each client;

(h) Immediately remove gloves that are torn or have small pinholes, wash hands and put on fresh, unused gloves;

(i) Take precautions to prevent injuries caused by needles and other sharp instruments or devices during procedures; when cleaning used instruments; during disposal of used needles; and when handling sharp instruments after procedures;

(j) Prevent needlestick injuries by not recapping needles, not bending or breaking needles by hand and by not otherwise manipulating by hand;

(k) Dispose of used disposable needles and other sharp items in puncture-resistant containers;

(l) Inspect hands for small cuts, sores and abrasions; if present, use a Seal-skin product or bandage. If the electrologist has weeping dermatitis or draining sores, the electrologist should avoid contact with clients and equipment until the weeping dermatitis or draining sores are healed;

(m) Regularly clean and disinfect countertops; regularly clean walls when visibly soiled; regularly vacuum and clean carpets and floors; and

(n) Clean and disinfect other frequently touched surfaces including, but not limited to, equipment and lamps between each client.

(2) Tattoo artists - The following universal precautions must be used by tattoo artists in the care of all clients.

(a) Wash hands with soap and water immediately before and after each client contact;

(b) Wash hands and other skin surfaces immediately and thoroughly if contaminated with blood or other body fluids;

(c) Wash hands immediately before fresh, unused gloves are put on and after gloves are removed;

(d) Clean the client's skin by applying an antiseptic or antibacterial solution prior to and following treatment;

(e) Wear fresh, unused gloves with each client to prevent skin and mucous membrane exposure contact with blood or other body fluids of each client;

(f) Wear gloves for touching blood and body fluids, mucous membranes, or nonintact skin of all clients, and for handling items or surfaces soiled with blood or body fluids;

(g) Change gloves after contact with each client;

(h) Immediately remove gloves that are torn or have small pinholes, wash hands and put on fresh, unused gloves;

(i) Take precautions to prevent injuries caused by needles and other sharp instruments or devices during procedures, when cleaning used instruments, during disposal of used needles, and when handling sharp instruments after procedures;

(j) Prevent needlestick injuries by not recapping needles, not bending or breaking needles by hand and by not otherwise manipulating by hand;

(k) Dispose of used disposable needles and other sharp items in puncture-resistant containers;

(l) Inspect hands for small cuts, sores, and abrasions; if present, use a Seal-skin product or bandage. If a tattoo artist has weeping dermatitis or draining sores, the tattoo artist should avoid contact with clients and equipment until the weeping dermatitis or draining sores are healed;

(m) Regularly clean and disinfect countertops; regularly clean walls when visibly soiled; and regularly vacuum and clean carpets and floors;

(n) Clean and disinfect other frequently touched surfaces such as, clip cords, pigment holders, pigment bottles, pens, equipment and lamps between each client; and

(o) Take other measures to prevent cross contamination as included in national standards per RCW 70.54.340.

[Statutory Authority: RCW 70.54.340. 02-11-109, § 246-145-020, filed 5/20/02, effective 6/20/02.]

WAC 246-145-030 Sterile procedures. (1) Electrologist - To ensure that clients are not exposed to disease through needles or other instruments, electrologists must:

(a) Use single-use, presterilized disposable needles on one client and then dispose of the needle immediately in a puncture-resistant container;

(b) Not use reusable needles;

(c) Use single-use sharp items on only one client and dispose of the items immediately in a puncture-resistant container;

(d) Only reuse cleaned and sterilized sharp items and instruments that are intended for multiple use;

(e) Thoroughly clean and sterilize reusable sharp items and instruments between clients;

(f) Accumulate reusable sharp items and instruments in a holding container by submersion in a solution of a protein-dissolving enzyme detergent and water;

(g) Sterilize reusable items in a steam autoclave or dry-heat sterilizer, which is used, cleaned and maintained according to the manufacturer's instructions;

(h) Resterilize a reusable sterile instrument before using it on a client, if it is contaminated by dropping, by touching an unsterile surface, by a torn package, by the package being punctured, damaged, wet or by some other means;

(i) Immediately dispose of a single-use item in a puncture-resistant container, if it is contaminated by dropping, by touching an unsterile surface, by a torn package, by the package being punctured, damaged, wet or by some other means;

(j) Immediately dispose of an instrument in a puncture-resistant container if the expiration date has passed; and

(k) Monitor sterilizers to determine that all conditions of sterilization are met. This includes:

(i) Assuring that sterilizers have a thermometer and timer to indicate whether adequate heat has been applied to packaged equipment;

(ii) Using or checking chemical indicators on each package to assure the items have been exposed to the sterilization process;

(iii) Sterilizers must be tested by biological spore tests according to the manufacturer's instructions. In the event of a positive biological spore test, the electrologist must take immediate action to ensure all conditions of sterilization are met; and

(iv) Documentation of monitoring must be maintained either in the form of a log reflecting dates and person(s) conducting the testing or copies of reports from an independent testing entity. The documentation must be maintained at least three years.

(2) Tattoo artists - To ensure that clients are not exposed to disease through needles or other instruments, tattoo artists must:

(a) Use single-use, presterilized disposable needles on one client and then dispose of the needle immediately in a puncture-resistant container;

(b) Not use reusable needles;

(c) Use single-use sharp items on only one client and dispose of the items immediately in a puncture-resistant container;

(d) Only reuse cleaned and sterilized sharp items and instruments that are intended for multiple use;

(e) Thoroughly clean and sterilize reusable sharp items and instruments between clients;

(f) Accumulate reusable sharp items and instruments in a holding container by submersion in a solution of a protein-dissolving enzyme detergent and water;

(g) Sterilize reusable items in a steam autoclave or dry-heat sterilizer, which is used, cleaned and maintained according to the manufacturer's instructions;

(h) Resterilize a reusable sterile instrument before using it on a client, if it is contaminated by dropping, by touching an unsterile surface, by a torn package, by the package being punctured, damaged, wet or by some other means;

(i) Immediately dispose of a single-use item in a puncture-resistant container, if it is contaminated by dropping, by touching an unsterile surface, by a torn package, by the package being punctured, damaged, wet or by some other means;

(j) Immediately dispose of an instrument in a puncture-resistant container if the expiration date has passed; and

(k) Monitor sterilizers to determine that all conditions of sterilization are met. This includes:

(i) Assuring that sterilizers have a thermometer and timer to indicate whether adequate heat has been applied to packaged equipment;

(ii) Using or checking chemical indicators on each package to assure the items have been exposed to the sterilization process;

(iii) Sterilizers must be tested by biological spore tests according to the manufacturer's instructions. In the event of a positive biological spore test, the tattoo artist must take immediate action to ensure all conditions of sterilization are met; and

(iv) Documentation of monitoring must be maintained either in the form of a log reflecting dates and person(s) conducting the testing or copies of reports from an independent testing entity. The documentation must be maintained at least three years.

[Statutory Authority: RCW 70.54.340. 02-11-109, § 246-145-030, filed 5/20/02, effective 6/20/02.]

WAC 246-145-040 Penalty for not complying with rules. Any electrologist or tattoo artist out of compliance with the rules in this chapter will be guilty of a misdemeanor.

[Statutory Authority: RCW 70.54.340. 02-11-109, § 246-145-040, filed 5/20/02, effective 6/20/02.]

Chapter 246-170 WAC

TUBERCULOSIS—PREVENTION, TREATMENT, AND CONTROL

WAC

246-170-002	Findings and purpose.
246-170-011	Definitions.
246-170-021	Responsibility of local health officers.
246-170-031	Local health department responsibilities.
246-170-035	Tuberculin skin testing and medication administration training.
246-170-041	Inpatient services requirements.
246-170-051	Procedures for involuntary testing, treatment, and detention.
246-170-055	Due process proceedings.
246-170-061	Initiation of testing or treatment.
246-170-065	Persons already detained, confined, or committed.

DISPOSITION OF SECTIONS FORMERLY CODIFIED IN THIS CHAPTER

246-170-001	Purpose. [Statutory Authority: RCW 70.33.020. 92-02-018 (Order 224), § 246-170-001, filed 12/23/91, effective 1/23/92. Statutory Authority: RCW 43.70.040. 91-02-049 (Order 121), recodified as § 246-170-001, filed 12/27/90, effective 1/31/91; Order 848, § 248-99-010, filed 8/23/73.] Repealed by 95-04-035, filed 1/24/95, effective 1/24/95. Statutory Authority: ESB 6158 and chapter 70.28 RCW.
246-170-010	Definitions. [Statutory Authority: RCW 70.33.020. 92-02-018 (Order 224), § 246-170-010, filed 12/23/91, effective 1/23/92. Statutory Authority: RCW 43.70.-040. 91-02-049 (Order 121), recodified as § 246-170-010, filed 12/27/90, effective 1/31/91; Order 848, § 248-99-020, filed 8/23/73.] Repealed by 95-04-035, filed 1/24/95, effective 1/24/95. Statutory Authority: ESB 6158 and chapter 70.28 RCW.
246-170-020	Responsibility of local health officers. [Statutory Authority: RCW 43.70.040. 91-02-049 (Order 121), recodified as § 246-170-020, filed 12/27/90, effective 1/31/91; Order 848, § 248-99-030, filed 8/23/73.] Repealed by 95-04-035, filed 1/24/95, effective 1/24/95. Statutory Authority: ESB 6158 and chapter 70.28 RCW.
246-170-030	Local health department responsibilities. [Statutory Authority: RCW 70.33.020. 92-02-018 (Order 224), § 246-170-030, filed 12/23/91, effective 1/23/92. Statutory Authority: RCW 43.70.040. 91-02-049 (Order 121), recodified as § 246-170-030, filed 12/27/90, effective 1/31/91; Order 848, § 248-99-040, filed 8/23/73.] Repealed by 95-04-035, filed 1/24/95, effective 1/24/95.

	Statutory Authority: ESB 6158 and chapter 70.28 RCW.
246-170-040	Inpatient services. [Statutory Authority: RCW 43.70.-040. 91-02-049 (Order 121), recodified as § 246-170-040, filed 12/27/90, effective 1/31/91; Order 848, § 248-99-050, filed 8/23/73.] Repealed by 95-04-035, filed 1/24/95, effective 1/24/95. Statutory Authority: ESB 6158 and chapter 70.28 RCW.
246-170-050	Infection control. [Statutory Authority: RCW 43.70.-040. 91-02-049 (Order 121), recodified as § 246-170-050, filed 12/27/90, effective 1/31/91; Order 848, § 248-99-060, filed 8/23/73.] Repealed by 95-04-035, filed 1/24/95, effective 1/24/95. Statutory Authority: ESB 6158 and chapter 70.28 RCW.
246-170-060	Clinical services. [Statutory Authority: RCW 43.70.-040. 91-02-049 (Order 121), recodified as § 246-170-060, filed 12/27/90, effective 1/31/91; Order 848, § 248-99-070, filed 8/23/73.] Repealed by 95-04-035, filed 1/24/95, effective 1/24/95. Statutory Authority: ESB 6158 and chapter 70.28 RCW.
246-170-070	Home treatment. [Statutory Authority: RCW 43.70.-040. 91-02-049 (Order 121), recodified as § 246-170-070, filed 12/27/90, effective 1/31/91; Order 848, § 248-99-080, filed 8/23/73.] Repealed by 95-04-035, filed 1/24/95, effective 1/24/95. Statutory Authority: ESB 6158 and chapter 70.28 RCW.
246-170-080	Case monitoring. [Statutory Authority: RCW 70.33.-020. 92-02-018 (Order 224), § 246-170-080, filed 12/23/91, effective 1/23/92. Statutory Authority: RCW 43.70.040. 91-02-049 (Order 121), recodified as § 246-170-080, filed 12/27/90, effective 1/31/91; Order 138, § 248-99-090, filed 2/7/77; Order 848, § 248-99-090, filed 8/23/73.] Repealed by 95-04-035, filed 1/24/95, effective 1/24/95. Statutory Authority: ESB 6158 and chapter 70.28 RCW.
246-170-090	Program review. [Statutory Authority: RCW 43.70.040. 91-02-049 (Order 121), recodified as § 246-170-090, filed 12/27/90, effective 1/31/91; Order 848, § 248-99-100, filed 8/23/73.] Repealed by 95-04-035, filed 1/24/95, effective 1/24/95. Statutory Authority: ESB 6158 and chapter 70.28 RCW.

WAC 246-170-002 Findings and purpose. (1) The board of health finds that:

(a) Pulmonary tuberculosis is a life-threatening airborne disease that can be casually transmitted without significant interaction with an infectious person. Tuberculosis has reemerged as an epidemic disease nationally, and though Washington state is not in an epidemic yet, the increasing number of cases in Washington state each year clearly demonstrate that absent timely and effective public health intervention in individual cases, the residents of the state of Washington are at risk of being infected by tuberculosis.

(b) In order to limit the spread of tuberculosis, it is essential that individuals who have the disease are diagnosed and treated before they infect others. Diagnosis requires a variety of methodologies including skin tests, X rays, and laboratory analysis of sputum samples.

(c) A person with infectious tuberculosis who does not voluntarily submit to appropriate testing, treatment, or infection control methods poses an unreasonable risk of spreading the disease to those who come into the infectious person's proximity.

(d) Although the recommended course of treatment for tuberculosis varies somewhat from one individual to another, at a minimum, effective treatment requires a long-term regimen of multiple drug therapy. Some drugs are effective with some individuals but not others. The development of the appropriate course of treatment for any one individual may require trying different combinations of drugs and repeated drug susceptibility testing. The course of treatment may require as long as several years to complete.

(e) A person who begins a course of treatment for tuberculosis and fails to follow the recommended course through to completion is highly likely to relapse at some point into infectious tuberculosis. The person will most likely then be infected with what is known as multiple drug resistant tuberculosis, which is more virulent, more difficult to treat, and more likely to result in fatality. A person who is infectious with multiple drug resistant tuberculosis poses a significant risk of transmitting multiple drug resistant tuberculosis to other persons, unless appropriate treatment and infection control methods are followed.

(f) Multiple drug resistant tuberculosis is a significant element in the epidemic that is being encountered nationwide, and effective public health interventions are necessary to prevent that epidemic from developing in or spreading to Washington state.

(2) The following rules are adopted for the purpose of establishing standards necessary to protect the public health by:

(a) Assuring the diagnosis, treatment, and prevention of tuberculosis; and

(b) Assuring that the highest priority is given to providing appropriate individualized preventive and curative treatment in the least restrictive setting.

[Statutory Authority: ESB 6158 and chapter 70.28 RCW. 95-04-035, § 246-170-002, filed 1/24/95, effective 1/24/95.]

WAC 246-170-011 Definitions. Unless the context clearly requires otherwise, the definitions in this section apply throughout this chapter.

"Case management" means a comprehensive, ongoing identification of needs, including the need for any medical, social, educational, or other support services; the development and implementation of a detailed plan of services and related activities; use of community linkages; and advocacy for the client performed in a prescribed, accountable manner.

"Confirmed" or "confirmed case" means an individual who has a positive bacteriologic culture for *Mycobacterium tuberculosis* complex or a suspected case that shows response to an appropriate course of treatment.

"Department" means the department of health.

"Detention" or "detain" means the act of restricting an individual's movement by confining the person.

"Directly observed therapy (DOT)" and "directly observed preventive therapy (DOPT)" mean providing oral medications to patients and observing ingestion of medications by patients.

"Infected" means an individual who has tubercle bacilli as identified by a positive tuberculin skin test, but is not capable of transmitting the organism to another person.

"Infectious" means the stage of disease in which an individual transmits viable tuberculosis organisms into the air.

"Inpatient" means health care furnished to an individual who has been admitted to a hospital.

"Outpatient" means health care furnished to an individual who is not an inpatient.

"Personal protective equipment" means respirators and other equipment as required by the department of labor and industries.

"Prevention" means the interventions that interrupt the spread of tuberculosis, either within an individual, within the population, or both.

"Preventive therapy" means either treatment to prevent infection in an uninfected person or treatment to prevent disease in an infected person.

"Primary health care provider" means the person who assumes the day-to-day medical care of a tuberculosis patient.

"Suspected case" means an individual with signs or symptoms suggestive of tuberculosis disease prior to confirmation.

"Treatment" means a course of long-term multiple drug or other appropriate therapy prescribed for an individual with suspected or confirmed disease in accordance with accepted medical practice and current applicable national and state guidelines, and may include preventive therapy.

"Tuberculin skin test" means the introduction of purified protein derivative (PPD) by the Mantoux method.

"Tuberculosis community health worker" means an unlicensed person trained to perform tuberculin skin testing, directly observed therapy, and directly observed preventive therapy and working pursuant to chapter 70.28 RCW as part of a program established by a state or local health officer to control tuberculosis.

[Statutory Authority: ESB 6158 and chapter 70.28 RCW. 95-04-035, § 246-170-011, filed 1/24/95, effective 1/24/95.]

WAC 246-170-021 Responsibility of local health officers. Each county, city-county and district health officer is responsible for the control of tuberculosis within a jurisdiction. Each health officer shall act as or shall designate a physician to act as tuberculosis control officer. This individual shall coordinate all aspects of the prevention, treatment, and control program.

[Statutory Authority: ESB 6158 and chapter 70.28 RCW. 95-04-035, § 246-170-021, filed 1/24/95, effective 1/24/95.]

WAC 246-170-031 Local health department responsibilities. (1) Each local health department shall assure the provision of a comprehensive program for the prevention, treatment, and control of tuberculosis. Services shall include:

(a) Prevention and screening, with emphasis on screening of high risk populations;

(b) Diagnosis and monitoring, including laboratory and radiology;

(c) Individualized treatment planning consistent with American Thoracic Society/Centers for Disease Control and Prevention statements based on the least restrictive measures necessary to assure appropriate treatment; and

(d) Case management.

(2) In the absence of third party reimbursement, the local health department shall assure the provision of inpatient or outpatient care, including DOT/DOPT and case management.

(3) Each local health department shall maintain a register of all diagnosed or suspected cases of tuberculosis. In addition, each local health department shall also maintain a register of individuals to whom that health department is providing preventive therapy. Quarterly status reports on suspected and diagnosed cases shall be furnished to the department of health tuberculosis control program.

(4) A physician knowledgeable in the diagnosis and treatment of tuberculosis approved by the department shall be available to provide review of diagnoses, plans of management and, if appropriate, discharge from inpatient facilities.

(5) Sufficient nursing, clerical, and other appropriate personnel shall be provided to furnish supervision of preventive and outpatient treatment, surveillance, suspect evaluation, epidemiologic investigation, and contact workup.

[Statutory Authority: ESB 6158 and chapter 70.28 RCW. 95-04-035, § 246-170-031, filed 1/24/95, effective 1/24/95.]

WAC 246-170-035 Tuberculin skin testing and medication administration training. The department shall make available a course to be used by the state tuberculosis control program or local health departments to train tuberculosis community health workers.

This course shall include, but not be limited to:

(1) Tuberculosis infection and disease, including prevention, transmission, pathogenesis, diagnosis and treatment;

(2) The administration, reading, and interpretation of the Mantoux tuberculin skin test;

(3) The performance of oral directly observed therapy and directly observed preventive therapy;

(4) Adverse reactions to tuberculosis medications and how to monitor patients for adverse reactions;

(5) Appropriate referral mechanisms for positive skin tests, adverse reactions, or other medical needs;

(6) Personal health and safety requirements including the use of personal protective equipment.

[Statutory Authority: ESB 6158 and chapter 70.28 RCW. 94-20-080, § 246-170-035, filed 10/4/94, effective 11/4/94.]

WAC 246-170-041 Inpatient services requirements. (1) Inpatient services to infectious or suspected cases shall be provided in hospitals or hospital units of correctional facilities. These facilities shall meet infection control program requirements pursuant to WAC 246-318-035, and shall provide:

(a) A single-patient room consistent with the guidelines set forth in the *1994 CDC Guidelines For Preventing the Transmission of Tuberculosis in Health Care Facilities*, or as hereafter amended. Copies of these guidelines are available from the Washington state department of health, TB control program;

(b) Medical, nursing, laboratory, radiology, pharmacy, patient education, and social services;

(c) Discharge conferences involving at least the current primary provider, a local health department representative, and transferring and receiving facility representatives.

(2) Suspected and infectious cases may be housed and treated in other settings not meeting the requirements of this section only as approved by the local health officer.

[Statutory Authority: ESB 6158 and chapter 70.28 RCW. 95-04-035, § 246-170-041, filed 1/24/95, effective 1/24/95.]

WAC 246-170-051 Procedures for involuntary testing, treatment, and detention. (1) A local health officer shall make reasonable efforts to obtain voluntary compliance

with requests for examination, testing, and treatment prior to initiating the procedures for involuntary detention.

(2) If the local health officer has reason to believe that:

(a) A person is a suspected case, and that the person has failed to comply with a documented request from a health care practitioner or the local health officer to submit to examination and testing;

(b) A person with confirmed tuberculosis is failing to comply with an individual treatment plan approved by the local health officer;

(c) A person who is either a suspected or confirmed case and is failing to comply with infection control directives issued by the local health officer; or

(d) A person is a suspected or confirmed case of tuberculosis based upon generally accepted standards of medical and public health science. A local health officer shall investigate and evaluate the factual basis supporting his or her "reason to believe";

then the health officer may detain the person, cause the person to be detained by written order, or petition the superior court *ex parte* for an order to take the person into emergency detention for testing or treatment, or both. The period of detention shall not exceed seventy-two hours, excluding weekends and holidays.

(3) At the time of detention the person detained shall be given the following written notice:

NOTICE: You have the right to a superior court hearing within seventy-two hours of detention, excluding holidays and weekends. You have the right to legal counsel. If you are unable to afford legal counsel, then counsel will be appointed for you at government expense and you should request the appointment of counsel at this time. If you currently have legal counsel, then you have an opportunity to contact that counsel for assistance.

You have a right to contest the facts alleged against you, to cross-examine witnesses, and to present evidence and witnesses on your behalf.

You have a right to appeal any decision made by the court.

You may be given appropriate TB medications only on your informed consent, or pursuant to a court order.

(4) If a person is involuntarily detained under this section, within one judicial day of initial detention, the local health officer shall file with the superior court in the county of detention a petition for detention. A petition filed under this section shall specify:

(a) The basis for the local health officer's belief that the respondent is either a suspected or confirmed case; including the name, address and phone numbers of whom the health officer expects to testify in support of the petition for detention and identification of any and all medical tests and records relied upon by the local health officer;

(b) The specific actions taken by the local health officer to obtain voluntary compliance by the respondent with recommended examination and testing or treatment, as the case may be;

(c) The nature and duration of further detention or other court-ordered action that the local health officer believes is necessary in order to assure that the respondent is appropriately tested or treated;

(d) The basis for believing that further detention or other court-ordered action is necessary to protect the public health; and

(e) Other information the local health officer believes is pertinent to the proper resolution of the petition.

(5) Service on respondent. The health officer shall serve a copy of the petition on the individual named therein at the time of the detention. If the person informs the health officer that he or she is represented by legal counsel, service on such counsel shall be made by delivering a copy of the petition to the attorney's office no later than the time of filing the petition with the superior court.

[Statutory Authority: ESB 6158 and chapter 70.28 RCW. 95-04-035, § 246-170-051, filed 1/24/95, effective 1/24/95.]

WAC 246-170-055 Due process proceedings. (1) A hearing on the petition for detention filed under WAC 246-170-051 shall be conducted in superior court within seventy-two hours after initial detention, excluding weekends and holidays. The local health officer shall have the burden of proving the allegations set forth in the petition by a preponderance of the evidence. The person named in the petition shall have the right to cross-examine witnesses, present evidence, and be represented by an attorney at any hearing held on the petition. If the person is indigent and requests appointment of legal counsel, legal counsel shall be appointed at public expense at least twenty-four hours prior to the superior court hearing.

(2) At the conclusion of the hearing, the court shall consider the evidence, the action taken by the health officer to secure voluntary compliance by the patient, and the purpose and intent of the public health laws, including this chapter, and may take one of the following actions:

(a) If the court finds that the respondent is a suspected case, the court may enter an order requiring that the person be subjected to further examination, testing, and treatment as specified in the court's order. If the court finds that further detention of the respondent is necessary in order to assure that the examination, testing, and treatment occurs, or to protect the public health the court may order that the respondent be detained for an additional period not to exceed forty-five days. The results of testing conducted under this chapter shall be provided to the court and the person detained or his or her legal counsel as soon as they are available to the local health officer. The court may then conduct an additional hearing to determine whether the person is a confirmed case and, if so, whether further measures are necessary to protect the public health pursuant to (b) or (c) of this subsection.

(b) If the court finds that the person is a confirmed case, that further measures less restrictive than detention of the respondent are necessary to assure that appropriate treatment is implemented and that imposition of less restrictive measures will be sufficient to protect the public health, the court may enter an order setting forth such measures and ordering the respondent to comply with the measures.

(c) If the court finds that the person is a confirmed case, that further detention of the respondent is necessary to protect the public health, and that imposition of less restrictive measures will not be sufficient to protect the public health, the court may order that the respondent be detained and treated for an additional period not to exceed forty-five days.

(d) If the court finds that there is insufficient evidence to support the petition for detention, then the court shall immediately release the person detained.

(3) A person detained under this chapter may be released prior to the expiration of the court-ordered detention if the health officer or the court finds that less restrictive measures are sufficient to protect the public health. The court may impose such conditions on the release of the person as the court finds are necessary to protect the public health. A person detained under this chapter may also petition the court for release based upon new evidence or a change in circumstances.

(4) The court may extend a period of court-ordered detention for additional periods not to exceed one hundred eighty days each following a hearing as described in WAC 246-170-051 and this section, if the court finds that the requirements of subsection (2)(a), (b), or (c) of this section have been met and if the court finds that further detention is necessary to assure that appropriate treatment is implemented, and that imposition of less restrictive measures are not sufficient to protect the public health. As an alternative to extending the period of detention, if the court finds after hearing that further measures less restrictive than detention are necessary to assure that appropriate treatment is continued, and that imposition of less restrictive measures will be sufficient to protect the public health, the court may enter an order setting forth the measures and ordering the respondent to comply.

(5) In the event that a person has been released from detention prior to completion of the prescribed course of treatment and fails to comply with the prescribed course of treatment, the health officer where that individual is found may detain that person, and any court having jurisdiction of the person may order the person detained for an additional period or periods, not to exceed one hundred eighty days each, as the court finds necessary to protect the public health.

(6) If a person has been detained in a county other than the county in which the court that originally ordered the detention is located, venue of the proceedings may remain in the original county, or may be transferred to the county of detention. Change in venue may be sought either by the local health officer in the original county or in the county of detention, or by the person detained. Except as otherwise agreed between the original health officer and the health officer in the county of detention, the original health officer retains jurisdiction over the detained person, including financial responsibility for costs incurred in implementing and continuing the detention.

(7) Court orders entered under this chapter shall be entered only after a hearing at which the respondent is accorded the same rights as at the initial hearing on the petition for detention.

(8)(a) When a court order for detention is issued, the transporting law enforcement agency and the receiving facility shall be informed of the infectious TB status of the person for disease control and the protection of the health of the staff, other offenders and the public. Such information shall be made available prior to the transport.

(b) Whenever disclosure is made pursuant to this subsection, it shall be accompanied by a statement in writing which includes the following or substantially similar language: "This information has been disclosed to you from records whose confidentiality is protected by state law. State law prohibits you from making any further disclosure of it except as authorized by state law."

(c) Transporting agencies and/or receiving facilities shall establish and implement policies and procedures that maintain confidentiality related to the detained person's medical information as defined in this subsection and state law.

[Statutory Authority: ESB 6158 and chapter 70.28 RCW. 95-04-035, § 246-170-055, filed 1/24/95, effective 1/24/95.]

WAC 246-170-061 Initiation of testing or treatment. If a person has been detained under WAC 246-170-051 or 246-170-055, the health officer may begin testing or treatment, with informed consent, or pursuant to a court order as appropriate, pending the hearing required under WAC 246-170-055.

[Statutory Authority: ESB 6158 and chapter 70.28 RCW. 95-04-035, § 246-170-061, filed 1/24/95, effective 1/24/95.]

WAC 246-170-065 Persons already detained, confined, or committed. (1) The provisions of WAC 246-170-051 through 246-170-061 do not apply to persons who have been lawfully detained, confined, or committed to the custody of a penal institution, a mental health facility, or another public or private institution. The person in charge of such facility or his or her designee shall report to the local health officer the names of persons in custody who are either a suspected or confirmed case. The report shall include information indicating the date upon which the person is to be released from the facility, if known, and if no specific release date has been determined, the earliest date upon which release is likely to occur. A person in custody may be ordered to undergo examination and testing or treatment, as appropriate, by the person in charge of the facility or designee, subject to such constitutional or other requirements as may be applicable.

(2) The person in charge of a custodial facility shall notify the local health officer and the department of the release of a person who is at the time of release reasonably believed to be either a suspected or confirmed case. The notice shall be given to the local health officer where the facility is located and to the local health officer having jurisdiction over the place to which the person is being released, if known. The notice shall be given as early as is practical, but in no event later than the time of the actual release.

[Statutory Authority: ESB 6158 and chapter 70.28 RCW. 95-04-035, § 246-170-065, filed 1/24/95, effective 1/24/95.]

Chapter 246-203 WAC
GENERAL SANITATION

WAC

246-203-010	Definition—Public or common nuisance.
246-203-020	Spitting.
246-203-030	Common towel.
246-203-060	Water sold to the public for drinking purposes in bottles or other containers.
246-203-070	Ice sold for public use.
246-203-100	Disposal of human excreta.
246-203-121	Disposal of dead animals.
246-203-130	Keeping of animals.
246-203-160	Sanitation of public buildings.

246-203-180 Piggeries.
246-203-200 Disease producing organisms for rodent extermination forbidden.
246-203-210 Common drinking cups.

DISPOSITION OF SECTIONS FORMERLY CODIFIED IN THIS CHAPTER

246-203-080 Pollution of ground water prohibited. [Statutory Authority: RCW 43.20.050. 92-02-019 (Order 225B), § 246-203-080, filed 12/23/91, effective 1/23/92; 91-02-051 (Order 124B), recodified as § 246-203-080, filed 12/27/90, effective 1/31/91; Regulation .50.080, effective 3/11/60.] Repealed by 97-20-100, filed 9/29/97, effective 10/30/97. Statutory Authority: RCW 43.20.-050.

246-203-090 Stream pollution. [Statutory Authority: RCW 43.20.-050. 92-02-019 (Order 225B), § 246-203-090, filed 12/23/91, effective 1/23/92; 91-02-051 (Order 124B), recodified as § 246-203-090, filed 12/27/90, effective 1/31/91; Regulation .50.090, effective 3/11/60.] Repealed by 97-20-100, filed 9/29/97, effective 10/30/97. Statutory Authority: RCW 43.20.050.

246-203-110 Kitchen and laundry water. [Statutory Authority: RCW 43.20.050. 91-02-051 (Order 124B), recodified as § 246-203-110, filed 12/27/90, effective 1/31/91; Regulation .50.110, effective 3/11/60.] Repealed by 97-20-100, filed 9/29/97, effective 10/30/97. Statutory Authority: RCW 43.20.050.

246-203-120 Disposal of garbage, trash, rubbish, offal, dead animals, and manure. [Statutory Authority: RCW 43.20.050. 91-02-051 (Order 124B), recodified as § 246-203-120, filed 12/27/90, effective 1/31/91; Regulation .50.120, effective 3/11/60; subsection (2) amended by filing of 6/3/65.] Repealed by 07-14-149, filed 7/5/07, effective 8/5/07. Statutory Authority: RCW 43.20.050(2).

246-203-140 Stagnant water. [Statutory Authority: RCW 43.20.050. 91-02-051 (Order 124B), recodified as § 246-203-140, filed 12/27/90, effective 1/31/91; Regulation .50.140, effective 3/11/60.] Repealed by 97-20-100, filed 9/29/97, effective 10/30/97. Statutory Authority: RCW 43.20.050.

246-203-150 Highway sanitation. [Statutory Authority: RCW 43.20.-050. 91-02-051 (Order 124B), recodified as § 246-203-150, filed 12/27/90, effective 1/31/91; Regulation .50.150, effective 3/11/60.] Repealed by 97-20-100, filed 9/29/97, effective 10/30/97. Statutory Authority: RCW 43.20.050.

246-203-170 Objectionable establishments and industrial wastes. [Statutory Authority: RCW 43.20.050. 92-02-019 (Order 225B), § 246-203-170, filed 12/23/91, effective 1/23/92; 91-02-051 (Order 124B), recodified as § 246-203-170, filed 12/27/90, effective 1/31/91; Regulation .50.170, effective 3/11/60.] Repealed by 97-20-100, filed 9/29/97, effective 10/30/97. Statutory Authority: RCW 43.20.050.

WAC 246-203-010 Definition—Public or common nuisance. For the purpose of these regulations, a public or common nuisance shall be considered as that which is set up, maintained or continued so as to be injurious to the health, or an obstruction to the use of property by interfering with the repose, health, safety or life of any considerable number of persons.

[Statutory Authority: RCW 43.20.050. 91-02-051 (Order 124B), recodified as § 246-203-010, filed 12/27/90, effective 1/31/91; Regulation .50.010, effective 3/11/60.]

WAC 246-203-020 Spitting. Spitting upon the floors or walls of a public building or buildings used for public assemblage, of a building used for manufacturing or industrial purposes, or upon the floors or platforms or any part of any railroad or trolley car or ferry boat, or any other public conveyance, is prohibited.

[Statutory Authority: RCW 43.20.050. 91-02-051 (Order 124B), recodified as § 246-203-020, filed 12/27/90, effective 1/31/91; Regulation .50.020, effective 3/11/60.]

WAC 246-203-030 Common towel. No person, firm, corporation or authorities owning, in charge of, or in control of any lavatory or wash room in any hotel, theatre, lodging house, restaurant, factory, school, church, store, office building, railway or trolley station, or public conveyance by land, water or air, or other institution or conveyance frequented by the public, or which may be used for the purpose of public assembly or as a place of employment, shall provide in or about such lavatory or washroom any towel for common use.

The term "common use" in this section shall be construed to mean, the use of all or any portion of a towel by more than one person without adequate cleansing.

[Statutory Authority: RCW 43.20.050. 91-02-051 (Order 124B), recodified as § 246-203-030, filed 12/27/90, effective 1/31/91; Regulation .50.030, effective 3/11/60.]

WAC 246-203-060 Water sold to the public for drinking purposes in bottles or other containers. (1) **Quality.** No water shall be sold, offered for sale or rendered available for drinking purposes in bottles or other containers unless such water is of a sanitary quality approved by the secretary of the department of health.

(2) **Inspection.** All plants for the preparation of water for sale in bottles or other containers for drinking purposes and the sources of the water supply shall be inspected as frequently as necessary by a representative of the department of health, and samples of water collected for sanitary analyses at the department of health laboratories.

(3) **Sterilizing containers.** Bottles or other containers in which water is sold for drinking purposes shall be sterilized before refilling. The method of sterilization shall be approved by the secretary of the department of health.

(4) **Water purification.** Processes of purification of waters that are to be sold for drinking purposes shall be approved by the secretary of the department of health before the water can be sold or offered for sale.

[Statutory Authority: RCW 43.20.050. 92-02-019 (Order 225B), § 246-203-060, filed 12/23/91, effective 1/23/92; 91-02-051 (Order 124B), recodified as § 246-203-060, filed 12/27/90, effective 1/31/91; Regulation .50.060, effective 3/11/60.]

WAC 246-203-070 Ice sold for public use. (1) **Quality.** No ice shall be sold, offered for sale or rendered available for use to the public unless such ice is of a sanitary quality approved by the secretary of the department of health.

(2) **Information.** Any company, corporation, city or individual selling artificial ice for public consumption shall submit to the department of health complete information concerning the source of water supply used for the manufacture of the ice and a detailed description of the manufacturing processes involved.

Any company, corporation, city or individual harvesting natural ice shall file full information with the department of health with regard to the source of the ice and method of storage.

[Statutory Authority: RCW 43.20.050. 92-02-019 (Order 225B), § 246-203-070, filed 12/23/91, effective 1/23/92; 91-02-051 (Order 124B), recodified

as § 246-203-070, filed 12/27/90, effective 1/31/91; Regulation .50.070, effective 3/11/60.]

WAC 246-203-100 Disposal of human excreta. (1) **Waters of the state defined.** For the purpose of this regulation, the term "waters of the state" wherever used, shall include all streams and springs, and all bodies of surface and of ground water, whether natural or artificial, within the boundaries of the state.

(2) **Privies shall be fly-proof.** No privy, cesspool, septic tank, or other receptacle for human excrement shall be constructed, maintained or used so that flies have or may have access to the excrementitious matter contained therein.

(3) **Privies shall not drain in any waters of the state.** No privy, urinal, cesspool, septic tank or other receptacle for human excrement shall be constructed, maintained or used which directly or indirectly drains or discharges over or upon the surface of the ground, or into any waters of the state either directly or indirectly; unless the contents of such urinal, cesspool, septic tank or receptacle for human excrement are subjected to some recognized sterilization treatment approved by the department of health.

(4) **Privies shall be kept clean.** All privies, urinals, cesspools, septic tanks or other receptacles for human excrement shall be cleansed at sufficiently frequent intervals to prevent the contents from overflowing.

(5) **Treating excreta on watersheds of public water supplies.** All schools, hamlets, villages, towns or industrial settlements which are now located or may be hereafter located on the watershed of any public water supply, not provided with a sewerage system, shall provide and maintain a reasonable system approved by the state director of health for collecting and disposing of all accumulations of human excrement within their respective jurisdiction or control.

(6) **Connection with sewer.** No privy, cesspool, septic tank or similar receptacle for human excrement shall be constructed, maintained or used on premises where a sewer is at all accessible which is part of a sewerage system from which sewage is lawfully discharged into the waters of the state.

(7) **Use of human excreta for fertilizer prohibited.** The contents of privies, cesspools, septic tanks or other receptacles for human excrement shall not be placed upon the surface of the ground or be used for fertilizing purposes for crops or gardens.

(8) **No privy near foodstuffs.** No privy, urinal, toilet or other receptacle for human excrement shall be constructed, maintained or used in any room, or have direct connection with any room wherein any kind of exposed foods or foodstuffs are prepared, stored or handled.

[Statutory Authority: RCW 43.20.050. 92-02-019 (Order 225B), § 246-203-100, filed 12/23/91, effective 1/23/92; 91-02-051 (Order 124B), recodified as § 246-203-100, filed 12/27/90, effective 1/31/91; Regulation .50.100, effective 3/11/60.]

WAC 246-203-121 Disposal of dead animals. (1) **Definitions.** For the purpose of this regulation the following definitions apply:

(a) "Burial" means completely covering with soil in a manner and location not requiring a permit for a landfill under chapter 70.95 RCW, Solid waste management—Reduction and recycling.

(b) "Composting" means a process of controlled aerobic decomposition in compliance with chapter 70.95 RCW, Solid waste management—Reduction and recycling.

(c) "Dead animal" means the carcass or tissue from an animal, large or small, except part of an animal used for food or other beneficial purpose in accordance with federal, state, and local laws and regulations. "Dead animal" does not mean a fish or other primarily aquatic animal.

(d) "Incineration" means controlled and monitored combustion for the purposes of volume reduction and pathogen destruction in an enclosed device approved by the department of ecology or the local air pollution control authority under chapter 70.94 RCW, Washington Clean Air Act, and chapter 70.95 RCW, Solid waste management—Reduction and recycling.

(e) "Landfilling" means a process of disposal at a permitted facility where solid waste is permanently placed in or on land in compliance with rules adopted by the department of ecology under chapter 70.95 RCW, Solid waste management—Reduction and recycling.

(f) "Livestock" means horses, mules, donkeys, cattle, bison, sheep, goats, swine, rabbits, llamas, alpacas, ratites, poultry, waterfowl, game birds, or other species according to RCW 16.36.005.

(g) "Natural decomposition" means natural decay on the surface of the ground without cover material.

(h) "Rendering" means heat processing according to requirements under chapter 16.68 RCW, Disposal of dead animals.

(2) **Disposal methods.**

(a) Within seventy-two hours after death or discovery, the owner of a dead animal or, if the owner of the animal cannot be identified, the owner of the property on which the animal is found must properly dispose of the dead animal. A dead animal must be covered or otherwise removed from public view immediately upon discovery by the person responsible for disposing of the dead animal.

(b) The person responsible for disposal of a dead animal must dispose of it in a manner so as not to become a public or common nuisance or cause pollution of surface or ground water.

(c) The person responsible for disposal of a dead animal must dispose of it by burial, landfilling, incineration, composting, rendering, or another method approved by the local health officer (such as natural decomposition) that is not otherwise prohibited by federal, state, or local law or regulation.

(d) A person disposing of a dead animal by burial must place it so that every part is covered by at least three feet of soil; at a location not less than one hundred feet from any well, spring, stream or other surface waters; not in a low-lying area subject to seasonal flooding or within a one hundred-year flood plain; and not in a manner likely to contaminate ground water.

(e) A person disposing of a dead animal must not bury or compost it within the sanitary control area of a public drinking water supply source as designated under chapter 246-290 WAC, Public water supplies, or chapter 246-291 WAC, Group B public water systems.

(f) The local health officer may specify the method of disposal for a dead animal if:

(i) The animal died with a communicable disease transmissible to humans; or

(ii) The local health officer considers a public health emergency to exist.

(g) The provisions of RCW 16.36.092 and chapter 16-25 WAC supersede the provisions of this regulation for the disposal of a livestock animal that has died because of disease or unknown cause.

[Statutory Authority: RCW 43.20.050(2). 07-14-149, § 246-203-121, filed 7/5/07, effective 8/5/07.]

WAC 246-203-130 Keeping of animals. (1) Any person, firm or corporation is prohibited from keeping or sheltering animals in such a manner that a condition resulting from same shall constitute a nuisance.

(2) In populous districts, stable manure must be kept in a covered watertight pit or chamber and shall be removed at least once a week during the period from April 1st to October 1st and, during the other months, at intervals sufficiently frequent to maintain a sanitary condition satisfactory to the health officer. Manure on farms or isolated premises other than dairy farms need not be so protected and removed unless ordered by the health officer.

(3) Manure shall not be allowed to accumulate in any place where it can prejudicially affect any source of drinking water.

[Statutory Authority: RCW 43.20.050. 91-02-051 (Order 124B), recodified as § 246-203-130, filed 12/27/90, effective 1/31/91; Regulation .50.130, effective 3/11/60.]

WAC 246-203-160 Sanitation of public buildings. (1) **Definition.** A public building shall be construed to mean any theater, show-house, public hall, public meeting place, public transportation terminal, or any other public building not covered by specific regulations: Provided, That a public building shall not be construed to include any store, market, supermarket, or other commercial establishment open to the general public for commercial purposes which does not cater to an audience.

(2) **Lighting and ventilation.** All public buildings shall be properly lighted and ventilated according to the type of said building and the uses to which it is put.

(3) **Water supply.**

(a) Any public place supplied with water under pressure shall be equipped with sanitary drinking fountains of an approved type.

(b) Where water supplied for drinking is not obtained from a public water supply, such water shall be of a quality approved by the secretary of the department of health. When not under pressure, drinking water shall be stored in a covered container of an approved type.

(c) The use of the common drinking cup is prohibited.

(4) **Toilet facilities.** Every public building shall be provided with adequate sanitary toilet facilities for each of the sexes; and such facilities shall be convenient and accessible. Every public building which must provide adequate sanitary toilet facilities shall provide at least one free sanitary toilet facility for each of the sexes. Where toilet facilities are voluntarily provided by any store, market, supermarket, or other commercial establishment for use by customers of such establishment or the general public, there shall be at least one free sanitary toilet facility provided for each of the sexes. It shall be the duty of the owner, manager, or other responsible person in charge to see that the toilet system is properly installed and maintained in a usable and sanitary condition at all times.

The method of sewage disposal for all public buildings shall comply with the rules and regulations of the state board of health.

(5) **Cleaning.** All public buildings shall be kept at all times in a clean and sanitary condition and the cleaning shall be carried on under proper sanitary conditions. All rooms used for public meetings shall be cleaned after each meeting held in them, such cleaning to consist of thorough sweeping of the floors and wiping of the woodwork, together with proper airing of the rooms. No room shall be swept without the use of a proper dust-laying substance. Dry dusting is prohibited. In construing this regulation all meetings held during the course of a single day shall be regarded as one meeting.

[Statutory Authority: RCW 43.20.050. 92-02-019 (Order 225B), § 246-203-160, filed 12/23/91, effective 1/23/92; 91-02-051 (Order 124B), recodified as § 246-203-160, filed 12/27/90, effective 1/31/91; Order 98, § 248-50-160, filed 4/5/74; Order 89, § 248-50-160, filed 10/3/73; Regulation .50.160, effective 3/11/60.]

WAC 246-203-180 Piggeries. (1) No pigsty or piggery shall be built or maintained on marshy ground or land subject to overflow, nor within 200 feet of any stream or other source of water supply.

(2) When garbage is fed to pigs all unconsumed garbage shall be removed daily and disposed of by burial or incineration.

(3) No organic material furnishing food for flies shall be allowed to accumulate on the premises.

(4) All garbage shall be handled and fed upon platforms of concrete or other impervious material.

(5) Unslaked lime, hypochlorite of lime, borax or mineral oil shall be used daily in sufficient quantities to prevent offensive odors and the breeding to flies.

(6) All garbage, offal and flesh fed to swine must be sterilized by cooking before feeding.

[Statutory Authority: RCW 43.20.050. 91-02-051 (Order 124B), recodified as § 246-203-180, filed 12/27/90, effective 1/31/91; Order 44, § 248-50-180, filed 12/11/70; Regulation .50.180, effective 3/11/60.]

WAC 246-203-200 Disease producing organisms for rodent extermination forbidden. The use of any disease-producing organisms such as the so-called "rat viruses" or any bacteria for the purpose of rodent extermination is prohibited.

[Statutory Authority: RCW 43.20.050. 91-02-051 (Order 124B), recodified as § 246-203-200, filed 12/27/90, effective 1/31/91; Regulation .50.200, effective 3/11/60.]

WAC 246-203-210 Common drinking cups. No person, firm, corporation or authorities owning, in charge of, or in control of any hotel, theatre, restaurant, lodging house, factory, school, church, store, office building, railway, trolley or other public conveyance station, or public conveyance by land, water or air, or other institution or conveyance frequented by the public or which may be used for the purpose of public assembly or as a place of employment, is permitted

to furnish any cup, vessel or other receptacle for common use in any such place for drinking or eating purposes.

The term "common use" in this section shall be construed to mean, for use by more than one person without adequate cleansing.

[Statutory Authority: RCW 43.20.050. 91-02-051 (Order 124B), recodified as § 246-203-210, filed 12/27/90, effective 1/31/91; Regulation .50.210, effective 3/11/60.]

Chapter 246-205 WAC

DECONTAMINATION OF ILLEGAL DRUG MANUFACTURING OR STORAGE SITES

WAC

246-205-001 Purpose and authority.
246-205-010 Definitions.

DECONTAMINATION CONTRACTOR CERTIFICATION

246-205-021 Training provider certification.
246-205-031 Basic training course content.
246-205-041 Refresher training course.
246-205-051 Certified training provider responsibilities.
246-205-061 Training provider certification renewal.
246-205-071 Worker and supervisor certification.
246-205-081 Worker and supervisor certification renewal.
246-205-091 Contractor certification.
246-205-101 Reciprocity.
246-205-111 Performance standards.
246-205-121 Denial, suspension, revocation of certification, and civil penalties.
246-205-131 Certified contractor list.

LOCAL HEALTH OFFICER RESPONSIBILITIES

246-205-510 Local health officer responsibilities.
246-205-520 Posting property.
246-205-530 Inspecting property.
246-205-531 Sampling procedures.
246-205-540 Determining contamination.
246-205-541 Decontamination standards.
246-205-550 Reporting contaminated property.
246-205-560 Notification of contaminated property.
246-205-570 Decontamination.
246-205-580 Verifying decontamination.
246-205-590 Recording decontamination.
246-205-990 Fees.

DISPOSITION OF SECTIONS FORMERLY CODIFIED IN THIS CHAPTER

246-205-020 Authorized contractor services. [Statutory Authority: RCW 64.44.060 and chapter 64.44 RCW. 91-04-007 (Order 125SB), § 246-205-020, filed 1/24/91, effective 4/1/91.] Repealed by 03-02-022, filed 12/23/02, effective 1/23/03. Statutory Authority: RCW 64.44.070.

246-205-030 Courses for training workers and supervisors. [Statutory Authority: RCW 64.44.060 and chapter 64.44 RCW. 91-04-007 (Order 125SB), § 246-205-030, filed 1/24/91, effective 4/1/91.] Repealed by 03-02-022, filed 12/23/02, effective 1/23/03. Statutory Authority: RCW 64.44.070.

246-205-040 Training course approval. [Statutory Authority: RCW 64.44.060 and 64.44.070. 92-02-017 (Order 223SB), § 246-205-040, filed 12/23/91, effective 1/23/92. Statutory Authority: RCW 64.44.060 and chapter 64.44 RCW. 91-04-007 (Order 125SB), § 246-205-040, filed 1/24/91, effective 4/1/91.] Repealed by 03-02-022, filed 12/23/02, effective 1/23/03. Statutory Authority: RCW 64.44.070.

246-205-050 Worker and supervisor certification. [Statutory Authority: RCW 64.44.060 and chapter 64.44 RCW. 91-04-007 (Order 125SB), § 246-205-050, filed 1/24/91, effective 4/1/91.] Repealed by 03-02-022, filed 12/23/02, effective 1/23/03. Statutory Authority: RCW 64.44.070.

246-205-060 Worker and supervisor certificate renewal. [Statutory Authority: RCW 64.44.060 and chapter 64.44 RCW. 91-04-007 (Order 125SB), § 246-205-060, filed 1/24/91, effective 4/1/91.] Repealed by 03-02-022, filed 12/23/02, effective 1/23/03. Statutory Authority: RCW 64.44.070.

246-205-070 Authorized contractor certification. [Statutory Authority: RCW 64.44.060 and chapter 64.44 RCW. 91-04-007 (Order 125SB), § 246-205-070, filed 1/24/91, effective 4/1/91.] Repealed by 03-02-022, filed 12/23/02, effective 1/23/03. Statutory Authority: RCW 64.44.070.

246-205-080 Reciprocity. [Statutory Authority: RCW 64.44.060 and 64.44.070. 92-02-017 (Order 223SB), § 246-205-080, filed 12/23/91, effective 1/23/92. Statutory Authority: RCW 64.44.060 and chapter 64.44 RCW. 91-04-007 (Order 125SB), § 246-205-080, filed 1/24/91, effective 4/1/91.] Repealed by 03-02-022, filed 12/23/02, effective 1/23/03. Statutory Authority: RCW 64.44.070.

246-205-090 On-site supervision. [Statutory Authority: RCW 64.44.060 and chapter 64.44 RCW. 91-04-007 (Order 125SB), § 246-205-090, filed 1/24/91, effective 4/1/91.] Repealed by 03-02-022, filed 12/23/02, effective 1/23/03. Statutory Authority: RCW 64.44.070.

246-205-100 Performance standards. [Statutory Authority: RCW 64.44.060 and chapter 64.44 RCW. 91-04-007 (Order 125SB), § 246-205-100, filed 1/24/91, effective 4/1/91.] Repealed by 03-02-022, filed 12/23/02, effective 1/23/03. Statutory Authority: RCW 64.44.070.

246-205-110 Denial, suspension, revocation of certification, and civil penalties. [Statutory Authority: RCW 64.44.060 and chapter 64.44 RCW. 91-04-007 (Order 125SB), § 246-205-110, filed 1/24/91, effective 4/1/91.] Repealed by 03-02-022, filed 12/23/02, effective 1/23/03. Statutory Authority: RCW 64.44.070.

246-205-120 Authorized contractor certification list. [Statutory Authority: RCW 64.44.060 and chapter 64.44 RCW. 91-04-007 (Order 125SB), § 246-205-120, filed 1/24/91, effective 4/1/91.] Repealed by 03-02-022, filed 12/23/02, effective 1/23/03. Statutory Authority: RCW 64.44.070.

WAC 246-205-001 Purpose and authority. (1) This chapter is adopted to protect the public's health, safety, and welfare by establishing standards, procedures, and responsibilities for:

(a) The certification of contractors and their employees authorized to perform decontamination of illegal drug manufacturing or storage sites; and

(b) Regulating the occupancy and use of property where hazardous chemicals or chemical residues commonly associated with the manufacture of illegal drugs are or may be present.

(2) The statutory authority for the adoption of this chapter is chapter 64.44 RCW.

(a) Contractor certification rules are jointly adopted by the state board of health and the department of health; and

(b) Rules in this chapter pertaining to local health officers' responsibilities are adopted by the state board of health.

(3) This chapter does not apply to industrial sites where a person's manufacturing process uses a hazardous chemical when licensed or regulated by state or federal agencies.

[Statutory Authority: RCW 64.40.070 [64.44.070] and chapter 64.44 RCW. 92-10-027 (Order 268B), § 246-205-001, filed 4/29/92, effective 5/30/92. Statutory Authority: RCW 64.44.060 and chapter 64.44 RCW. 91-04-007 (Order 125SB), § 246-205-001, filed 1/24/91, effective 4/1/91.]

WAC 246-205-010 Definitions. For the purposes of this chapter, the following words and phrases shall have the following meanings unless the content clearly indicates otherwise.

"Authorized contractor" means any person or persons:

• Registered under chapter 18.27 RCW; and

• Certified by the department to decontaminate, demolish, or dispose of contaminated property as required by chapter 64.44 RCW and this chapter.

"Basic course" means a training course which has been sponsored or approved by the department for workers and supervisors who perform or supervise decontamination on illegal drug manufacturing or storage sites.

"Certificate" means a department issued written approval under this chapter.

"Certified" means a person who has department issued written approval under this chapter.

"Contaminated" or "contamination" means polluted by hazardous chemicals so that the property is unfit for human habitation or use due to immediate or long-term hazards. Property that at one time was contaminated, but has been satisfactorily decontaminated according to procedures established by the state board of health is not "contaminated."

"Decontamination" means the process of reducing levels of known contaminants to the lowest practical level using currently available methods and processes.

"Department" means the Washington state department of health.

"Disposal of contaminated property" means the disposition of contaminated property under the provisions of chapter 70.105 RCW.

"Hazardous chemicals" means the following substances used in the manufacture of illegal drugs:

• Hazardous substances as defined in RCW 70.105D.-020; and

• Precursor substances as defined in RCW 69.43.010 which the state board of health, in consultation with the state board of pharmacy, has determined present an immediate or long-term health hazard to humans.

"Illegal drug manufacturing or storage site" means any property where a person illegally manufactures or stores a controlled substance or a law enforcement agency or the property owner believes a person illegally manufactured or stored a controlled substance.

"Initial site assessment" means the first evaluation of a property to determine the nature and extent of observable damage and contamination.

"List of contaminated properties" means a list of properties contaminated by illegal drug manufacturing or the storage of hazardous chemicals.

"Local department" means the jurisdictional local health department or district.

"Local health officer" means a health officer or authorized representative as defined under chapters 70.05, 70.08, and 70.46 RCW.

"Person" means an individual, firm, association, copartnership, political subdivision, government agency, municipality, industry, public or private corporation, or other entity.

"Posting" means attaching a written or printed announcement conspicuously on property which may be, or is determined to be, contaminated by illegal drug manufacturing or the storage of a hazardous chemical.

"Property" means any site, lot, parcel of land, structure, or part of a structure involved in the illegal manufacture of a drug or storage of a hazardous chemical including, but not limited to:

• Single-family residences;

• Units or multiplexes;

• Condominiums;

• Apartment buildings;

• Motels and hotels;

• Boats;

• Motor vehicles;

• Trailers;

• Manufactured housing;

• Any ship, booth, or garden; or

• Any site, lot, parcel of land, structure, or part of a structure that may be contaminated by previous use.

"Property owner" means a person with a lawful right of possession of the property by reason of obtaining it by purchase, exchange, gift, lease, inheritance, or legal action.

"Refresher course" means a department sponsored or approved biennial training course for decontamination workers and supervisors. An approved refresher course:

• Reviews the subjects taught in the initial training course; and

• Includes updated information on emerging decontamination technology.

"Storage site" means any property used for the storage of hazardous chemicals or illegally manufactured controlled substances.

"Supervisor" means a person certified by the department and employed by an authorized contractor who is on site during the decontamination of an illegal drug manufacturing or storage site and who is responsible for the activities performed.

"Worker" means a person certified by the department and employed by an authorized contractor who performs decontamination of an illegal drug manufacturing or storage site.

"Warning" means a sign posted by the local health officer conspicuously on the site of an illegal drug manufacturing or storage site informing potential occupants that hazardous chemicals may exist on, or have been removed from, the premises and that entry is unsafe.

[Statutory Authority: RCW 64.44.070. 03-02-022, § 246-205-010, filed 12/23/02, effective 1/23/03. Statutory Authority: RCW 64.40.070 [64.44.-070] and chapter 64.44 RCW. 92-10-027 (Order 268B), § 246-205-010, filed 4/29/92, effective 5/30/92. Statutory Authority: RCW 64.44.060 and 64.44.070. 92-02-017 (Order 223SB), § 246-205-010, filed 12/23/91, effective 1/23/92. Statutory Authority: RCW 64.44.060 and chapter 64.44 RCW. 91-04-007 (Order 125SB), § 246-205-010, filed 1/24/91, effective 4/1/91.]

DECONTAMINATION CONTRACTOR CERTIFICATION

WAC 246-205-021 Training provider certification. (1) Persons wanting to become an illegal drug lab decontamination training provider must obtain department approval of instructors and courses. The types of drug lab decontamination courses that may be approved by the department are:

(a) Basic worker;

(b) Basic supervisor; and

(c) Refresher worker and supervisor.

(2) To obtain approval of instructors, the applicant must demonstrate that the person has the breadth of knowledge and experience necessary to properly train workers and supervisors.

(3) To obtain approval of course work, the applicant must demonstrate the:

(a) Adequacy and accuracy of content; and

(b) Adequacy of training techniques.

(4) Applicants for training provider certification shall:

(a) Submit a completed training provider application as specified under subsection (5) of this section;

(b) Submit the required fee as specified under WAC 246-205-990; and

(c) Ensure the department receives the application sixty or more days before the requested approval date.

(5) A training provider application includes, but is not limited to:

(a) A completed training provider application form provided by the department;

(b) A list of all personnel involved in course presentation and a description of their qualifications;

(c) A detailed description of course content and the amount of time allotted to each major topic;

(d) A description of teaching methods;

(e) A list of questions for development of an examination; and

(f) Copies of all materials proposed for use, when requested from the department.

(6) Training provider certification is valid for two years from the date of issuance.

(7) Training provider certification may be terminated if the training provider fails to:

(a) Maintain the course content and quality as approved by the department; and

(b) Make changes to a course as required by the department.

[Statutory Authority: RCW 64.44.070. 03-02-022, § 246-205-021, filed 12/23/02, effective 1/23/03.]

WAC 246-205-031 Basic training course content. Department approved basic worker and supervisor training courses shall provide at a minimum:

(1) Information on state and federal laws, rules, and regulations applicable to illegal drug manufacturing or storage sites including, but not limited to, Contaminated properties, chapter 64.44 RCW; Precursor drugs, chapter 69.43 RCW; Uniform Controlled Substances Act, chapter 69.50 RCW; Washington Industrial Safety and Health Act, chapter 49.17 RCW; the Federal Occupational Health and Safety Act, 29 U.S.C. 651 et seq.; and this chapter.

(2) Chemical terminology, classifications, and properties related to illegal drug manufacturing.

(3) Illegal drug laboratory characteristics.

(4) First aid.

(5) Adverse health effects of exposure related to illegal drug manufacturing including, but not limited to:

(a) Toxicology; and

(b) Symptomology.

(6) Incompatibility of chemicals related to decontamination.

(7) Techniques and equipment used for decontamination of property.

(8) Handling unknown substances.

(9) State and federal requirements for dealing with hazardous materials including, but not limited to, chapter 173-303 WAC related to:

(a) Disposal;

(b) Transportation;

(c) Storage; and

(d) Reporting.

(10) Training for supervisors must also include, but not be limited to:

(a) Obtaining necessary information for making site assessments;

(b) Initial site assessment;

(c) Initial site sampling;

(d) Work plan development;

(e) Final site sampling;

(f) Report completion; and

(g) Penalties and liabilities.

[Statutory Authority: RCW 64.44.070. 03-02-022, § 246-205-031, filed 12/23/02, effective 1/23/03.]

WAC 246-205-041 Refresher training course. (1) A refresher training course is required every two years for workers and supervisors.

(2) Department approved refresher worker and supervisor training courses shall provide at a minimum:

(a) A thorough review of the subjects required under WAC 246-205-031;

(b) An update of information on state-of-the-art procedures and equipment;

(c) A review of regulatory changes and interpretation; and

(d) Other subjects if required by the department to update information on new technology and procedures.

[Statutory Authority: RCW 64.44.070. 03-02-022, § 246-205-041, filed 12/23/02, effective 1/23/03.]

WAC 246-205-051 Certified training provider responsibilities. (1) Prior to any training, the training provider shall:

(a) Notify the department in writing thirty or more days before training is scheduled to begin. The notification shall include the date, time, and address of the location where training will be conducted;

(b) Ensure that the size of the class is appropriate for learning the course content;

(c) Incorporate into training any required subject matter developed by the department;

(d) Obtain department approval in advance of any changes to the training; and

(e) Maintain the course content and quality as approved by the department.

(2) When requested by the department, the training provider shall confirm successful completion of CDL worker or supervisor training courses by applicants seeking CDL worker or supervisor certification.

(3) At the department's request, the training provider shall allow a department representative to attend a training course as an observer to verify that the training provider conducts the training in accordance with the training approved by the department.

(4) Training providers conducting training outside the state of Washington shall:

(a) Reimburse the department at current state of Washington per diem and travel allowance rates for travel expenses associated with department observance of the training courses; and

(b) Submit reimbursement to the department within thirty days of receipt of the billing notice.

[Statutory Authority: RCW 64.44.070. 03-02-022, § 246-205-051, filed 12/23/02, effective 1/23/03.]

WAC 246-205-061 Training provider certification renewal. Training providers seeking renewal certification shall submit the following to the department thirty or more days before expiration of the current certificate:

(1) A completed training provider application as described in WAC 246-205-021(5); and

(2) A fee as prescribed in WAC 246-205-990.

[Statutory Authority: RCW 64.44.070. 03-02-022, § 246-205-061, filed 12/23/02, effective 1/23/03.]

WAC 246-205-071 Worker and supervisor certification. (1) Applicants seeking certification as a decontamination worker shall ensure the department receives the following within sixty days of completing the basic worker course:

(a) A completed decontamination worker application;

(b) A fee as prescribed in WAC 246-205-990;

(c) Evidence of satisfying the requirements of WAC 296-62-30410;

(d) Evidence of successful completion of a department sponsored or approved basic decontamination worker course; and

(e) Evidence of passing the basic decontamination worker examination administered by the department with a score of seventy percent or higher.

(2) Applicants seeking certification as a decontamination supervisor shall ensure the department receives the following within sixty days of completing the basic supervisor course:

(a) A completed decontamination supervisor application;

(b) A fee as prescribed in WAC 246-205-990;

(c) Evidence of a valid Washington state decontamination worker certificate;

(d) Evidence of forty or more hours of on-site experience in hazardous material or illegal drug manufacturing or storage site decontamination projects;

(e) Evidence of satisfying the requirements of WAC 296-62-30415.

(f) Evidence of successful completion of a department sponsored or approved basic decontamination supervisor course; and

(g) Evidence of passing the basic decontamination supervisor examination administered by the department with a score of seventy percent or higher.

(3) Applicants for decontamination supervisor certification who can demonstrate that their work experience and training has resulted in experience and training equivalent to the requirements in WAC 246-205-031 and 246-205-071 (1)(c) and (2)(c), (d), and (e) may be certified as a CDL supervisor when they apply prior to May 1, 2003.

(a) For purposes of this subsection, an application includes:

(i) A completed decontamination supervisor application form;

(ii) A fee as prescribed in WAC 246-205-990; and

(iii) Evidence of meeting the requirements of this subsection.

(b) All other decontamination supervisor certification requirements of this chapter apply.

(4) Worker and supervisor certificates are valid for two years from the date of issuance.

(5) Workers and supervisors shall make certificates available for inspection at all times during an illegal drug manufacturing or storage site decontamination project.

(6) The certificate may be denied, suspended, or revoked as described in WAC 246-205-121.

[Statutory Authority: RCW 64.44.070. 03-02-022, § 246-205-071, filed 12/23/02, effective 1/23/03.]

WAC 246-205-081 Worker and supervisor certification renewal. (1) Worker and supervisor certification is valid for two years from the date of issuance.

(2) Certified workers and supervisors seeking certificate renewal shall submit to the department thirty or more days before expiration of the current certificate:

(a) A completed application form for certificate renewal;

(b) A fee prescribed in WAC 246-205-990; and

(c) Evidence of successful completion of a department sponsored or approved refresher training course.

(3) If a previously certified worker applies for certification following expiration of the previous certificate, but less than two years after expiration of the previous certificate, the worker shall:

(a) Submit to the department a completed application form for certificate renewal;

(b) Submit to the department a fee prescribed in WAC 246-205-990; and

(c) Retake the entire basic worker course.

(4) If a previously certified supervisor applies for certification following expiration of the previous certificate, but less than two years after expiration of the previous certificate, the supervisor shall:

(a) Submit to the department a completed application form for certificate renewal;

(b) Submit to the department a fee prescribed in WAC 246-205-990; and

(c) Retake the entire basic supervisor course.

[Statutory Authority: RCW 64.44.070. 03-02-022, § 246-205-081, filed 12/23/02, effective 1/23/03.]

WAC 246-205-091 Contractor certification. (1) A contractor may advertise, offer to undertake, or perform decontamination, demolition, or disposal work at an illegal drug manufacturing or storage site only after securing a certificate from the department.

(2) Applicants for department certification as an authorized contractor, shall submit to the department:

(a) Evidence of being licensed, bonded, and insured as a general contractor under the provisions of chapter 18.27 RCW;

(b) Evidence of department certification for each employee who will do work on an illegal drug manufacturing or storage site;

(c) Documentation that the contractor has at least one department certified supervisor and one department certified worker;

(d) A completed decontamination contractor application form; and

(e) A fee as prescribed in WAC 246-205-990.

[Statutory Authority: RCW 64.44.070. 03-02-022, § 246-205-091, filed 12/23/02, effective 1/23/03.]

WAC 246-205-101 Reciprocity. (1) The department may provide reciprocal certification for contractors, supervisors, and workers trained and certified in another state if standards and training are substantially equivalent to those of this chapter.

(2) Applicants for reciprocity shall submit to the department:

(a) A completed application form for the type of certification being requested;

(b) Documentation of specialized training for illegal drug manufacturing or storage site decontamination;

(c) Evidence of successful completion of training required by the Federal Occupational Safety and Health Act, 29 U.S.C. 651 et seq.; Washington Industrial Safety and Health Act regulations, chapter 49.17 RCW; and

(d) A fee as prescribed in WAC 246-205-990.

(3) Prior to certificate approval, the applicant may be required to:

(a) Submit additional information;

(b) Successfully complete a refresher course; or

(c) Pass a department-administered examination with a score of seventy percent or more.

[Statutory Authority: RCW 64.44.070. 03-02-022, § 246-205-101, filed 12/23/02, effective 1/23/03.]

WAC 246-205-111 Performance standards. Authorized contractors, including workers and supervisors, working at a decontamination site shall, at a minimum:

(1) Perform all decontamination work only with department certified workers and supervisors;

(2) File a work plan with and obtain approval from the local health department;

(3) Perform work in accordance with the approved work plan;

(4) Station on site a contractor-employed certified supervisor to oversee the activities performed;

(5) Perform work meeting applicable requirements of state and local building codes;

(6) Comply with applicable Federal Occupational Safety and Health Act, Public Law 91-596, 84 stat. 1590; and Washington Industrial Safety and Health Act regulations and requirements, chapter 49.17 RCW;

(7) Comply with applicable requirements of chapter 70.105 RCW, Hazardous waste management; and chapter 173-303 WAC, Dangerous waste regulations;

(8) Comply with applicable requirements of department of ecology and Environmental Protection Agency regulations;

(9) Comply with applicable contractor regulations;

(10) Notify the state and local jurisdictional health department of all work performed within ten days after completion of the project;

(11) Comply with all other applicable laws and regulations; and

(12) Comply with this chapter.

[Statutory Authority: RCW 64.44.070. 03-02-022, § 246-205-111, filed 12/23/02, effective 1/23/03.]

WAC 246-205-121 Denial, suspension, revocation of certification, and civil penalties. (1) An initial, renewal, or reciprocal illegal drug manufacturing or storage site decontamination worker, supervisor, or contractor certificate will be denied when an applicant fails to meet the requirements of WAC 246-205-071, 246-205-081, 246-205-091 or 246-205-101.

(2) Disciplinary action against a decontamination worker, supervisor, or contractor may be taken for failing to comply with the requirements of chapter 64.44 RCW, or any rule adopted under chapter 64.44 RCW. Disciplinary action may be taken on any of the following grounds:

(a) Failing to perform decontamination, demolition, or disposal work under the supervision of trained personnel;

(b) Failing to file a work plan;

(c) Failing to perform work pursuant to the work plan;

(d) Failing to perform work that meets the requirements of the department;

(e) Obtaining a certificate by error, fraud, or misrepresentation; or

(f) If the person has been certified pursuant to RCW 74.20A.320 by the department of social and health services as a person who is not in compliance with a support order or a residential or visitation order. If the person has continued to meet all other requirements for reinstatement during the suspension, reissuance of the license or certificate shall be automatic upon the department's receipt of a release issued by the department of social and health services stating that the person is in compliance with the order.

(3) Disciplinary action against a decontamination worker, supervisor, or contractor may include, but not be limited to, denial, suspension, or revocation of certification.

(4) A contractor may be assessed a civil penalty not to exceed five hundred dollars for each violation in addition to certification denial, suspension, or revocation pursuant to this rule. Each day the violation continues shall be considered a separate violation.

(5) Adjudicative proceedings are governed by chapter 34.05 RCW, the Administrative Procedure Act; chapter 246-10 WAC; and this chapter.

[Statutory Authority: RCW 64.44.070. 03-02-022, § 246-205-121, filed 12/23/02, effective 1/23/03.]

WAC 246-205-131 Certified contractor list. (1) The department shall maintain a list of authorized illegal drug manufacturing or storage site decontamination contractors.

(2) The department's authorized contractor list shall be made available to local health officials and other appropriate agencies semiannually, and to the public upon request.

[Statutory Authority: RCW 64.44.070. 03-02-022, § 246-205-131, filed 12/23/02, effective 1/23/03.]

LOCAL HEALTH OFFICER RESPONSIBILITIES

WAC 246-205-510 Local health officer responsibilities. As required by chapter 64.44 RCW, the local health officer's responsibilities shall include, but not be limited to:

(1) Posting property;

(2) Inspecting property;

(3) Determining contamination;

(4) Reporting contaminated property;

(5) Notification of contaminated property;

(6) Determining whether a contractor is required for decontamination;

(7) Verifying decontamination; and

(8) Recording decontamination.

[Statutory Authority: RCW 64.44.070. 03-02-022, § 246-205-510, filed 12/23/02, effective 1/23/03.]

WAC 246-205-520 Posting property. (1) Within one working day of notification from a law enforcement agency of potential contamination, the local health officer shall post a written warning on the premises. The warning shall inform potential occupants that hazardous chemicals may exist on, or have been removed from the property and that entry is unsafe.

(2) Within fourteen days of notification, the local health officer shall inspect the property.

(3) If the property is contaminated, the local health officer shall post a written notice on the premises declaring that the officer intends to issue an order prohibiting use of the property as long as the property is contaminated.

(4) Within ten working days of determining the property is contaminated, the local health officer shall cause to be served an order prohibiting use as required under WAC 246-205-560.

(5) Within one working day of issuance of the order, the local health officer shall post the order in a conspicuous place on the property.

[Statutory Authority: RCW 64.44.070. 03-02-022, § 246-205-520, filed 12/23/02, effective 1/23/03. Statutory Authority: RCW 64.40.070 [64.44.-070] and chapter 64.44 RCW. 92-10-027 (Order 268B), § 246-205-520, filed 4/29/92, effective 5/30/92.]

WAC 246-205-530 Inspecting property. Within fourteen days after a law enforcement agency or property owner notifies the local health officer of potential property contamination, the local health officer shall inspect the property.

(1) To enable the local health officer to determine contamination, the property inspection shall include, but not be limited to, an acquisition of data such as evidence of:

(a) Hazardous chemical use or storage on site;

(b) Chemical stains;

(c) Release or spillage of hazardous chemicals on the property; or

(d) Glassware or other paraphernalia associated with the manufacture of illegal drugs on site.

(2) As part of the property's inspection, the local health officer may request copies of any law enforcement reports, forensic chemist reports, and any department of ecology hazardous material transportation manifests needed to evaluate:

(a) The length of time the property was used as an illegal drug manufacturing or storage site;

(b) The size of the site actually used for the manufacture or storage of illegal drugs;

(c) What chemical process was involved in the manufacture of illegal drugs;

(d) What chemicals were removed from the scene; and

(e) The location of the illegal drug manufacturing or storage site in relation to the habitable areas of the property.

(3) The local health officer may coordinate the property's inspection with other appropriate agencies. At the request of the local health officer, the Washington state department of ecology may conduct an environmental assessment and may sample the property's ground water, surface water, septic tank water, soil, and other media as necessary to enable the local health officer to evaluate the long-term public health threats.

[Statutory Authority: RCW 64.44.070. 03-02-022, § 246-205-530, filed 12/23/02, effective 1/23/03. Statutory Authority: RCW 64.40.070 [64.44.-070] and chapter 64.44 RCW. 92-10-027 (Order 268B), § 246-205-530, filed 4/29/92, effective 5/30/92.]

WAC 246-205-531 Sampling procedures. (1) The analytical results obtained through sampling may be used as a method to determine contamination. Types of sample collection include, but are not limited to:

(a) Nonporous surface;

(b) Porous surface;

(c) Air;

(d) Drinking water;

(e) Ground water;

(f) Surface water;

(g) Soil; and

(h) Septic system.

(2) Collection of samples shall be performed by department of ecology staff; department of health certified CDL supervisors; or local health officers using:

(a) Standards and protocols to ensure accuracy and the ability to produce similar results with repeated sampling;

(b) Proper swabbing techniques to collect a representative sample of the area being sampled; and

(c) Proper care and prudent action to avoid contamination during sampling.

(3) All samples collected, transported, stored, and analyzed under the provisions of this section must be secured to assure an unbroken chain-of-custody as described in the American Society of Testing Materials Standard D 4840.

[Statutory Authority: RCW 64.44.070. 03-02-022, § 246-205-531, filed 12/23/02, effective 1/23/03.]

WAC 246-205-540 Determining contamination. (1) The local health officer shall make a determination of contamination when the inspection reveals the property is contaminated.

(2) If designated contaminated, the local health officer shall post and cause to be served an order prohibiting use of all or portions of the property as required under WAC 246-205-520 and 246-205-560.

(3) If the local health officer determines the property is not contaminated, the local health officer shall document the findings. The local health officer's documentation shall include:

(a) Findings;

(b) Conclusions;

(c) Name of the property owner;

(d) Mailing and street address of the property owner;

(e) Parcel identification number and legal description of the property; and

(f) Clear directions for locating the property.

[Statutory Authority: RCW 64.44.070. 03-02-022, § 246-205-540, filed 12/23/02, effective 1/23/03. Statutory Authority: RCW 64.40.070 [64.44.-070] and chapter 64.44 RCW. 92-10-027 (Order 268B), § 246-205-540, filed 4/29/92, effective 5/30/92.]

WAC 246-205-541 Decontamination standards. The decontamination standards include:

(1) Methamphetamine of less than or equal to 0.1 micro grams per 100 square centimeters;

(2) Total lead of less than or equal to 20 micro grams per square foot;

(3) Mercury of less than or equal to 50 nano grams per cubic meter in air; and

(4) Volatile organic compounds (VOCs) of 1 part per million total hydrocarbons and VOCs in air.

[Statutory Authority: RCW 64.44.070. 03-02-022, § 246-205-541, filed 12/23/02, effective 1/23/03.]

WAC 246-205-550 Reporting contaminated property. (1) When property is determined contaminated, the local health officer shall report the contaminated property to the state department of health:

(a) By telephone or e-mail within one working day; and

(b) In writing within ten working days.

(2) The local health officer's written contamination report to the state department of health shall include:

(a) Description of the findings;

(b) Conclusions;

(c) Name of the property owner;

(d) Mailing and street address, including zip code and county, of the property owner;

(e) Parcel identification number and legal description of the property to including township and section;

(f) Tax account number; and

(g) Date property determined contaminated.

[Statutory Authority: RCW 64.44.070. 03-02-022, § 246-205-550, filed 12/23/02, effective 1/23/03. Statutory Authority: RCW 64.40.070 [64.44.-070] and chapter 64.44 RCW. 92-10-027 (Order 268B), § 246-205-550, filed 4/29/92, effective 5/30/92.]

WAC 246-205-560 Notification of contaminated property. (1) Within ten working days after the local health officer's determination that a property is contaminated, the local health officer shall cause to be served, either personally or by certified mail, return receipt requested, an order prohibiting use to all known:

(a) Occupants; and

(b) Persons having an interest in the property as shown upon the records of the auditor's office of the county in which the property is located.

(2) If the whereabouts of persons described under subsection (1) of this section is unknown and the same cannot be ascertained by the local health officer in the exercise of reasonable diligence, and the health officer makes an affidavit to that effect, then the serving of the order upon such persons may be made by:

(a) Personal service; or

(b) Mailing a copy of the order by certified mail, postage prepaid, return receipt requested:

(i) To each person at the address appearing on the last equalized tax assessment roll of the county where the property is located; or

(ii) At the address known to the county assessor.

(3) The local health officer shall also mail a copy of the order addressed to each person or party having a recorded right, title, estate, lien, or interest in the property.

(4) The local health officer's order shall:

(a) Describe the local health officer's intended course of action;

(b) Describe the penalties for noncompliance with the order;

(c) Prohibit use of all or portions of the property as long as the property is contaminated;

(d) Describe what measures a property owner must take to have the property decontaminated; and

(e) Indicate the potential health risks involved.

(5) The local health officer shall:

(a) File a copy of the order prohibiting use of the property with the county auditor;

(b) Provide a copy of the order to the local building or code enforcement department; and

(c) Post the order in a conspicuous place on the property within one working day of issuance of the order.

(6) The local health officer's order shall advise that:

(a) A hearing before the local health officer or local health board shall be held upon the request of a person required to be notified of the order;

(b) The person's request for a hearing shall be made within ten days of the local health officer's serving of the order;

(c) The hearing shall be held not less than twenty days nor more than thirty days after the serving of the order; and

(d) In any hearing concerning whether property is contaminated, the property owner has the burden of showing that the property is decontaminated and meets the decontamination standards of WAC 246-205-541.

[Statutory Authority: RCW 64.44.070. 03-02-022, § 246-205-560, filed 12/23/02, effective 1/23/03. Statutory Authority: RCW 64.40.070 [64.44.-070] and chapter 64.44 RCW. 92-10-027 (Order 268B), § 246-205-560, filed 4/29/92, effective 5/30/92.]

WAC 246-205-570 Decontamination. (1) An owner of contaminated property who desires to reduce the contamination shall use the services of an authorized contractor unless otherwise authorized by the local health officer.

(2) The local health officer shall provide the property owner with a list of authorized contractors upon request.

(3) When an authorized contractor is required for decontamination, the property owner shall have a written work plan approved by the local health officer before starting decontamination.

(4) When an authorized contractor is required for decontamination, the contractor shall prepare the work plan in accordance with this chapter and chapter 64.44 RCW. When the local health officer determines the services of an authorized contractor are not necessary, the local health officer shall take appropriate measures to ensure the property is

decontaminated consistent with the purposes of chapter 64.44 RCW.

(5) The property owner or the contractor shall decontaminate the property according to the approved work plan and to meet the decontamination standards described in WAC 246-205-541.

(6) The property owner shall be responsible for:

(a) The costs of any property testing which may be required to demonstrate the presence or absence of hazardous chemicals;

(b) The costs of the property's decontamination and disposal expenses, as well as costs incurred by the local health officer resulting from the enforcement of this chapter;

(c) Keeping records documenting decontamination procedures and submitting notarized copies of all records to the local health officer; and

(d) Petitioning the local health officer to review the decontamination records and to declare the property decontaminated.

[Statutory Authority: RCW 64.44.070. 03-02-022, § 246-205-570, filed 12/23/02, effective 1/23/03. Statutory Authority: RCW 64.40.070 [64.44.-070] and chapter 64.44 RCW. 92-10-027 (Order 268B), § 246-205-570, filed 4/29/92, effective 5/30/92.]

WAC 246-205-580 Verifying decontamination. Within ten working days of a request for review of decontamination records, the local health officer:

(1) Shall review the documentation to verify decontamination was performed according to the approved work plan and the applicable decontamination standards in WAC 246-205-541 are met;

(2) May visit the property site to assess the thoroughness of the decontamination;

(3) May require the property owner to provide more extensive testing and assessment of the property site by an independent laboratory or firm qualified to perform such testing and assessment.

[Statutory Authority: RCW 64.44.070. 03-02-022, § 246-205-580, filed 12/23/02, effective 1/23/03. Statutory Authority: RCW 64.40.070 [64.44.-070] and chapter 64.44 RCW. 92-10-027 (Order 268B), § 246-205-580, filed 4/29/92, effective 5/30/92.]

WAC 246-205-590 Recording decontamination. If, after review of the information in WAC 246-205-580, the local health officer determines the property has been decontaminated, the local health officer shall within ten working days:

(1) Record a release for reuse document in the real property records of the county auditor where the property is located indicating that to the best of his or her knowledge, the property was decontaminated in accordance with this chapter.

(2) Send a copy of the release to the property owner.

(3) Send a copy of the release to the state department of health.

(4) Send a copy of the release to the local building or code enforcement department.

[Statutory Authority: RCW 64.44.070. 03-02-022, § 246-205-590, filed 12/23/02, effective 1/23/03.]

WAC 246-205-990 Fees. (1) The department charges the following fees for issuing and renewing certificates.

(2) The fees must cover the cost of issuing certificates, filing papers and notices, and administering this chapter. The costs include reproduction, travel, per diem, and administrative and legal support costs.

(3) Fees are nonrefundable and must be paid by check or money order made payable to the department.

(4) An applicant must pay the following fees when submitting an application:

(a) $100 for each initial, renewal, or reciprocal worker certificate application.

(b) $200 for each initial, renewal, or reciprocal supervisor certificate application.

(c) $1,125 for each initial, renewal, or reciprocal authorized contractor certificate application. The applicant's certificate shall expire annually on the expiration date of the contractor's license issued under chapter 18.27 RCW.

(d) $1,000 for each initial application and $750 for each renewal application for training provider certification for the worker drug lab decontamination course.

(e) $1,000 for each initial application and $750 for each renewal application for training provider certification for the supervisor drug lab decontamination course.

(f) To be certified as a training provider for the refresher training course, applicants must be certified as a training provider for the worker and supervisor courses. There is no fee for application as a training provider for the refresher training course.

[Statutory Authority: RCW 43.70.250 and 64.44.060. 06-16-119, § 246-205-990, filed 8/1/06, effective 9/1/06. Statutory Authority: RCW 43.70.-250 and 43.70.110. 03-13-123, § 246-205-990, filed 6/18/03, effective 7/19/03. Statutory Authority: RCW 43.70.250, 70.90.150, and 43.20B.250. 01-14-047, § 246-205-990, filed 6/29/01, effective 7/30/01. Statutory Authority: RCW 43.70.250. 00-02-016, § 246-205-990, filed 12/27/99, effective 1/27/00; 99-12-022, § 246-205-990, filed 5/24/99, effective 6/24/99. Statutory Authority: RCW 64.44.060 and chapter 64.44 RCW. 91-04-007 (Order 125SB), § 246-205-990, filed 1/24/91, effective 4/1/91.]

Chapter 246-215 WAC
FOOD SERVICE

WAC

246-215-001	Purpose and authority.
246-215-005	Minimum performance standards.
246-215-011	Definitions.
246-215-021	Management and personnel.
246-215-031	Employee hygiene.
246-215-041	Food supplies.
246-215-051	Public health labeling.
246-215-061	Food handling.
246-215-071	Equipment and utensils.
246-215-081	Water, plumbing, and waste.
246-215-091	Physical facilities.
246-215-121	Mobile food units.
246-215-131	Temporary food establishments.
246-215-141	Bed and breakfast operations.
246-215-151	Donated food distributing organizations.
246-215-181	Compliance and enforcement.
246-215-191	Exempt from permit.
246-215-200	Permits required, suspension, revocation, enforcement.
246-215-210	Service of notices.
246-215-220	Hearings.
246-215-240	Examination, hold orders, condemnation, and destruction of food.
246-215-251	Employee health.
246-215-260	Procedure when disease transmission is suspected.
246-215-280	Interpretation.
246-215-290	Separability clause.

246-215-300 Penalty clause.
246-215-311 Effective date.

DISPOSITION OF SECTIONS FORMERLY CODIFIED IN THIS CHAPTER

246-215-009 Definitions. [Statutory Authority: RCW 43.20.050. 91-02-051 (Order 124B), recodified as § 246-215-009, filed 12/27/90, effective 1/31/91; 84-14-090 (Order 274), § 248-84-002, filed 7/3/84; 80-14-059 (Order 203), § 248-84-002, filed 10/1/80.] Repealed by 92-08-112 (Order 261B), filed 4/1/92, effective 5/2/92. Statutory Authority: RCW 43.20.050.

246-215-010 Definitions. [Statutory Authority: RCW 43.20.050. 00-02-014, § 246-215-010, filed 12/27/99, effective 1/27/00; 92-08-112 (Order 261B), § 246-215-010, filed 4/1/92, effective 5/2/92.] Repealed by 04-22-111, filed 11/3/04, effective 5/2/05. Statutory Authority: RCW 43.20.050, 43.20.145 and 69.80.060.

246-215-019 Food supplies. [Statutory Authority: RCW 43.20.050. 91-02-051 (Order 124B), recodified as § 246-215-019, filed 12/27/90, effective 1/31/91; 80-14-059 (Order 203), § 248-84-010, filed 10/1/80; Regulation .84.010, filed 6/4/63; Regulation .84.010, effective 3/11/60.] Repealed by 92-08-112 (Order 261B), filed 4/1/92, effective 5/2/92. Statutory Authority: RCW 43.20.050.

246-215-020 Food supplies. [Statutory Authority: RCW 43.20.050. 92-08-112 (Order 261B), § 246-215-020, filed 4/1/92, effective 5/2/92.] Repealed by 04-22-111, filed 11/3/04, effective 5/2/05. Statutory Authority: RCW 43.20.050, 43.20.145 and 69.80.060.

246-215-029 Food protection and storage. [Statutory Authority: RCW 43.20.050. 91-02-051 (Order 124B), recodified as § 246-215-029, filed 12/27/90, effective 1/31/91; 80-14-059 (Order 203), § 248-84-015, filed 10/1/80.] Repealed by 92-08-112 (Order 261B), filed 4/1/92, effective 5/2/92. Statutory Authority: RCW 43.20.050.

246-215-030 Food protection. [Statutory Authority: RCW 43.20.050. 92-08-112 (Order 261B), § 246-215-030, filed 4/1/92, effective 5/2/92.] Repealed by 04-22-111, filed 11/3/04, effective 5/2/05. Statutory Authority: RCW 43.20.050, 43.20.145 and 69.80.060.

246-215-039 Food preparation, display, service and transportation. [Statutory Authority: RCW 43.20.050. 91-02-051 (Order 124B), recodified as § 246-215-039, filed 12/27/90, effective 1/31/91; 80-14-059 (Order 203), § 248-84-020, filed 10/1/80; Regulation .84.020, filed 6/4/63; Regulation .84.020, effective 3/11/60.] Repealed by 92-08-112 (Order 261B), filed 4/1/92, effective 5/2/92. Statutory Authority: RCW 43.20.050.

246-215-040 Public health labeling. [Statutory Authority: RCW 43.20.050. 00-02-014, § 246-215-040, filed 12/27/99, effective 1/27/00; 92-08-112 (Order 261B), § 246-215-040, filed 4/1/92, effective 5/2/92.] Repealed by 04-22-111, filed 11/3/04, effective 5/2/05. Statutory Authority: RCW 43.20.050, 43.20.145 and 69.80.060.

246-215-049 Personnel. [Statutory Authority: RCW 43.20.050. 91-02-051 (Order 124B), recodified as § 246-215-049, filed 12/27/90, effective 1/31/91; 80-14-059 (Order 203), § 248-84-025, filed 10/1/80.] Repealed by 92-08-112 (Order 261B), filed 4/1/92, effective 5/2/92. Statutory Authority: RCW 43.20.050.

246-215-050 Food preparation. [Statutory Authority: RCW 43.20.050. 92-08-112 (Order 261B), § 246-215-050, filed 4/1/92, effective 5/2/92.] Repealed by 04-22-111, filed 11/3/04, effective 5/2/05. Statutory Authority: RCW 43.20.050, 43.20.145 and 69.80.060.

246-215-059 Sanitary design, construction, and installation of equipment and utensils. [Statutory Authority: RCW 43.20.050. 91-02-051 (Order 124B), recodified as § 246-215-059, filed 12/27/90, effective 1/31/91; 84-14-090 (Order 274), § 248-84-030, filed 7/3/84; 80-14-059 (Order 203), § 248-84-030, filed 10/1/80; Regulation .84.030, filed 6/4/63; Regulation .84.030 effective 3/11/60.] Repealed by 92-08-112 (Order 261B), filed 4/1/92, effective 5/2/92. Statutory Authority: RCW 43.20.050.

246-215-060 Modified atmosphere packaging. [Statutory Authority: RCW 43.20.050. 92-08-112 (Order 261B), § 246-215-060, filed 4/1/92, effective 5/2/92.] Repealed by 04-22-111, filed 11/3/04, effective 5/2/05. Statutory Authority: RCW 43.20.050, 43.20.145 and 69.80.060.

246-215-069 Equipment and utensil cleaning and sanitation. [Statutory Authority: RCW 43.20.050. 91-02-051 (Order 124B), recodified as § 246-215-069, filed 12/27/90, effective 1/31/91; 84-14-090 (Order 274), § 248-84-035, filed 7/3/84; 80-14-059 (Order 203), § 248-84-035, filed 10/1/80.] Repealed by 92-08-112 (Order 261B), filed 4/1/92, effective 5/2/92. Statutory Authority: RCW 43.20.050.

246-215-070 Temperature control. [Statutory Authority: RCW 43.20.050. 92-08-112 (Order 261B), § 246-215-070, filed 4/1/92, effective 5/2/92.] Repealed by 04-22-111, filed 11/3/04, effective 5/2/05. Statutory Authority: RCW 43.20.050, 43.20.145 and 69.80.060.

246-215-079 Sanitary facilities and controls. [Statutory Authority: RCW 43.20.050. 91-02-051 (Order 124B), recodified as § 246-215-079, filed 12/27/90, effective 1/31/91; 80-14-059 (Order 203), § 248-84-040, filed 10/1/80; Regulation .84.040, filed 6/4/63; Regulation .84.040, effective 3/11/60.] Repealed by 92-08-112 (Order 261B), filed 4/1/92, effective 5/2/92. Statutory Authority: RCW 43.20.050.

246-215-080 Personal hygiene. [Statutory Authority: RCW 43.20.-050. 92-08-112 (Order 261B), § 246-215-080, filed 4/1/92, effective 5/2/92.] Repealed by 04-22-111, filed 11/3/04, effective 5/2/05. Statutory Authority: RCW 43.20.050, 43.20.145 and 69.80.060.

246-215-089 Garbage and rubbish. [Statutory Authority: RCW 43.20.050. 91-02-051 (Order 124B), recodified as § 246-215-089, filed 12/27/90, effective 1/31/91; 80-14-059 (Order 203), § 248-84-045, filed 10/1/80.] Repealed by 92-08-112 (Order 261B), filed 4/1/92, effective 5/2/92. Statutory Authority: RCW 43.20.050.

246-215-090 Sanitary design, construction, and installation of equipment and utensils. [Statutory Authority: RCW 43.20.050. 92-08-112 (Order 261B), § 246-215-090, filed 4/1/92, effective 5/2/92.] Repealed by 04-22-111, filed 11/3/04, effective 5/2/05. Statutory Authority: RCW 43.20.050, 43.20.145 and 69.80.060.

246-215-099 Insect and rodent control. [Statutory Authority: RCW 43.20.050. 91-02-051 (Order 124B), recodified as § 246-215-099, filed 12/27/90, effective 1/31/91; 80-14-059 (Order 203), § 248-84-050, filed 10/1/80; Regulation .84.050, filed 6/4/63; Regulation .84.050, effective 3/11/60.] Repealed by 92-08-112 (Order 261B), filed 4/1/92, effective 5/2/92. Statutory Authority: RCW 43.20.050.

246-215-100 Equipment and utensil cleaning and sanitizing. [Statutory Authority: RCW 43.20.050. 92-08-112 (Order 261B), § 246-215-100, filed 4/1/92, effective 5/2/92.] Repealed by 04-22-111, filed 11/3/04, effective 5/2/05. Statutory Authority: RCW 43.20.050, 43.20.145 and 69.80.060.

246-215-109 Construction and maintenance of physical facilities. [Statutory Authority: RCW 43.20.050. 91-02-051 (Order 124B), recodified as § 246-215-109, filed 12/27/90, effective 1/31/91; 80-14-059 (Order 203), § 248-84-055, filed 10/1/80.] Repealed by 92-08-112 (Order 261B), filed 4/1/92, effective 5/2/92. Statutory Authority: RCW 43.20.050.

246-215-110 Poisonous or toxic materials. [Statutory Authority: RCW 43.20.050. 92-08-112 (Order 261B), § 246-215-110, filed 4/1/92, effective 5/2/92.] Repealed by 04-22-111, filed 11/3/04, effective 5/2/05. Statutory Authority: RCW 43.20.050, 43.20.145 and 69.80.060.

246-215-119 Mobile units. [Statutory Authority: RCW 43.20.050. 91-02-051 (Order 124B), recodified as § 246-215-119, filed 12/27/90, effective 1/31/91; 80-14-059 (Order 203), § 248-84-060, filed 10/1/80; Regulation .84.060, filed 6/4/63; Rules (part), effective 3/11/60.] Repealed by 92-08-112 (Order 261B), filed 4/1/92, effective 5/2/92. Statutory Authority: RCW 43.20.050.

246-215-120 Sanitary facilities and controls. [Statutory Authority: RCW 43.20.050. 92-08-112 (Order 261B), § 246-215-120, filed 4/1/92, effective 5/2/92.] Repealed by 04-22-111, filed 11/3/04, effective 5/2/05. Statutory Authority: RCW 43.20.050, 43.20.145 and 69.80.060.

246-215-129 Bulk foods, storage, and display. [Statutory Authority: RCW 43.20.050. 91-02-051 (Order 124B), recodified as § 246-215-129, filed 12/27/90, effective 1/31/91; 84-14-090 (Order 274), § 248-84-062, filed 7/3/84.] Repealed by 92-08-112 (Order 261B), filed 4/1/92, effective 5/2/92. Statutory Authority: RCW 43.20.050.

246-215-130 Garbage, rubbish, and litter. [Statutory Authority: RCW 43.20.050. 92-08-112 (Order 261B), § 246-215-130, filed 4/1/92, effective 5/2/92.] Repealed by 04-22-111,

filed 11/3/04, effective 5/2/05. Statutory Authority: RCW 43.20.050, 43.20.145 and 69.80.060.

246-215-139 Temporary food service establishments. [Statutory Authority: RCW 43.20.050. 91-02-051 (Order 124B), recodified as § 246-215-139, filed 12/27/90, effective 1/31/91; 80-14-059 (Order 203), § 248-84-065, filed 10/1/80.] Repealed by 92-08-112 (Order 261B), filed 4/1/92, effective 5/2/92. Statutory Authority: RCW 43.20.050.

246-215-140 Pests and pest control. [Statutory Authority: RCW 43.20.050. 92-08-112 (Order 261B), § 246-215-140, filed 4/1/92, effective 5/2/92.] Repealed by 04-22-111, filed 11/3/04, effective 5/2/05. Statutory Authority: RCW 43.20.050, 43.20.145 and 69.80.060.

246-215-149 Permits required, suspension and revocation procedures. [Statutory Authority: RCW 43.20.050. 91-02-051 (Order 124B), recodified as § 246-215-149, filed 12/27/90, effective 1/31/91; 80-14-059 (Order 203), § 248-84-070, filed 10/1/80; Regulation .84.070 (part), filed 6/4/63; Rules (part), effective 3/11/60.] Repealed by 92-08-112 (Order 261B), filed 4/1/92, effective 5/2/92. Statutory Authority: RCW 43.20.050.

246-215-150 Construction and maintenance of physical facilities. [Statutory Authority: RCW 43.20.050 and chapter 70.84 RCW. 02-09-028, § 246-215-150, filed 4/9/02, effective 5/10/02. Statutory Authority: RCW 43.20.050. 92-08-112 (Order 261B), § 246-215-150, filed 4/1/92, effective 5/2/92.] Repealed by 04-22-111, filed 11/3/04, effective 5/2/05. Statutory Authority: RCW 43.20.050, 43.20.145 and 69.80.060.

246-215-159 Service of notices. [Statutory Authority: RCW 43.20.050. 91-02-051 (Order 124B), recodified as § 246-215-159, filed 12/27/90, effective 1/31/91; 80-14-059 (Order 203), § 248-84-075, filed 10/1/80.] Repealed by 92-08-112 (Order 261B), filed 4/1/92, effective 5/2/92. Statutory Authority: RCW 43.20.050.

246-215-160 Mobile food units. [Statutory Authority: RCW 43.20.050. 92-08-112 (Order 261B), § 246-215-160, filed 4/1/92, effective 5/2/92.] Repealed by 04-22-111, filed 11/3/04, effective 5/2/05. Statutory Authority: RCW 43.20.050, 43.20.145 and 69.80.060.

246-215-169 Hearings. [Statutory Authority: RCW 43.20.050. 91-02-051 (Order 124B), recodified as § 246-215-169, filed 12/27/90, effective 1/31/91; 80-14-059 (Order 203), § 248-84-080, filed 10/1/80.] Repealed by 92-08-112 (Order 261B), filed 4/1/92, effective 5/2/92. Statutory Authority: RCW 43.20.050.

246-215-170 Customer self-service of food and bulk food dispensing. [Statutory Authority: RCW 43.20.050. 92-08-112 (Order 261B), § 246-215-170, filed 4/1/92, effective 5/2/92.] Repealed by 04-22-111, filed 11/3/04, effective 5/2/05. Statutory Authority: RCW 43.20.050, 43.20.145 and 69.80.060.

246-215-179 Inspections. [Statutory Authority: RCW 43.20.050. 91-02-051 (Order 124B), recodified as § 246-215-179, filed 12/27/90, effective 1/31/91; 80-14-059 (Order 203), § 248-84-085, filed 10/1/80.] Repealed by 92-08-112 (Order 261B), filed 4/1/92, effective 5/2/92. Statutory Authority: RCW 43.20.050.

246-215-180 Bed and breakfast food service operations. [Statutory Authority: RCW 43.20.050. 92-08-112 (Order 261B), § 246-215-180, filed 4/1/92, effective 5/2/92.] Repealed by 04-22-111, filed 11/3/04, effective 5/2/05. Statutory Authority: RCW 43.20.050, 43.20.145 and 69.80.060.

246-215-189 Examination—Hold orders—Condemnation—Destruction of food. [Statutory Authority: RCW 43.20.050. 91-02-051 (Order 124B), recodified as § 246-215-189, filed 12/27/90, effective 1/31/91; 80-14-059 (Order 203), § 248-84-090, filed 10/1/80.] Repealed by 92-08-112 (Order 261B), filed 4/1/92, effective 5/2/92. Statutory Authority: RCW 43.20.050.

246-215-190 Temporary food service establishments. [Statutory Authority: RCW 43.20.050. 92-08-112 (Order 261B), § 246-215-190, filed 4/1/92, effective 5/2/92.] Repealed by 04-22-111, filed 11/3/04, effective 5/2/05. Statutory Authority: RCW 43.20.050, 43.20.145 and 69.80.060.

246-215-199 Review of plans. [Statutory Authority: RCW 43.20.050. 91-02-051 (Order 124B), recodified as § 246-215-199, filed 12/27/90, effective 1/31/91; 80-14-059 (Order 203), § 248-84-095, filed 10/1/80.] Repealed by 92-08-112 (Order 261B), filed 4/1/92, effective 5/2/92. Statutory Authority: RCW 43.20.050.

246-215-209 Procedure when infection is suspected. [Statutory Authority: RCW 43.20.050. 91-02-051 (Order 124B), recodified as § 246-215-209, filed 12/27/90, effective 1/31/91; 80-14-059 (Order 203), § 248-84-100, filed 10/1/80.] Repealed by 92-08-112 (Order 261B), filed 4/1/92, effective 5/2/92. Statutory Authority: RCW 43.20.050.

246-215-219 Variance clause. [Statutory Authority: RCW 43.20.050. 91-02-051 (Order 124B), recodified as § 246-215-219, filed 12/27/90, effective 1/31/91; 80-14-059 (Order 203), § 248-84-105, filed 10/1/80.] Repealed by 92-08-112 (Order 261B), filed 4/1/92, effective 5/2/92. Statutory Authority: RCW 43.20.050.

246-215-229 Interpretation. [Statutory Authority: RCW 43.20.050. 91-02-051 (Order 124B), recodified as § 246-215-229, filed 12/27/90, effective 1/31/91; 80-14-059 (Order 203), § 248-84-110, filed 10/1/80.] Repealed by 92-08-112 (Order 261B), filed 4/1/92, effective 5/2/92. Statutory Authority: RCW 43.20.050.

246-215-230 Inspections and investigations. [Statutory Authority: RCW 43.20.050. 92-08-112 (Order 261B), § 246-215-230, filed 4/1/92, effective 5/2/92.] Repealed by 04-22-111, filed 11/3/04, effective 5/2/05. Statutory Authority: RCW 43.20.050, 43.20.145 and 69.80.060.

246-215-239 Sulfiting agents. [Statutory Authority: RCW 43.20.050. 91-02-051 (Order 124B), recodified as § 246-215-239, filed 12/27/90, effective 1/31/91; 85-11-024 (Order 288), § 248-84-120, filed 5/13/85.] Repealed by 92-08-112 (Order 261B), filed 4/1/92, effective 5/2/92. Statutory Authority: RCW 43.20.050.

246-215-250 Review of plans and menu. [Statutory Authority: RCW 43.20.050. 92-08-112 (Order 261B), § 246-215-250, filed 4/1/92, effective 5/2/92.] Repealed by 04-22-111, filed 11/3/04, effective 5/2/05. Statutory Authority: RCW 43.20.050, 43.20.145 and 69.80.060.

246-215-270 Variance clause. [Statutory Authority: RCW 43.20.050. 92-08-112 (Order 261B), § 246-215-270, filed 4/1/92, effective 5/2/92.] Repealed by 04-22-111, filed 11/3/04, effective 5/2/05. Statutory Authority: RCW 43.20.050, 43.20.145 and 69.80.060.

246-215-500 Separability clause. [Statutory Authority: RCW 43.20.050. 91-02-051 (Order 124B), recodified as § 246-215-500, filed 12/27/90, effective 1/31/91; 80-14-059 (Order 203), § 248-84-500, filed 10/1/80.] Repealed by 92-08-112 (Order 261B), filed 4/1/92, effective 5/2/92. Statutory Authority: RCW 43.20.050.

246-215-900 Penalty clause. [Statutory Authority: RCW 43.20.050. 91-02-051 (Order 124B), recodified as § 246-215-900, filed 12/27/90, effective 1/31/91; 80-14-059 (Order 203), § 248-84-900, filed 10/1/80.] Repealed by 92-08-112 (Order 261B), filed 4/1/92, effective 5/2/92. Statutory Authority: RCW 43.20.050.

WAC 246-215-001 Purpose and authority. The purpose of chapter 246-215 WAC is to establish state board of health standards for food service under RCW 43.20.050 to promote and protect the health, safety, and well-being of the public and prevent the spread of disease through food.

[Statutory Authority: RCW 43.20.050, 43.20.145 and 69.80.060. 04-22-111, § 246-215-001, filed 11/3/04, effective 5/2/05. Statutory Authority: RCW 43.20.050. 92-08-112 (Order 261B), § 246-215-001, filed 4/1/92, effective 5/2/92; 91-02-051 (Order 124B), recodified as § 246-215-001, filed 12/27/90, effective 1/31/91; 80-14-059 (Order 203), § 248-84-001, filed 10/1/80; Regulation .84.001, filed 6/4/63; Regulation .84.001, effective 3/11/60.]

WAC 246-215-005 Minimum performance standards. (1) Any person owning, operating, or working in a food establishment must comply with and is subject to:

(a) The requirements of chapters 1 through 8 of the 2001 *Food Code* published by the U.S. Department of Health and Human Services, Public Health Service, Food and Drug Administration (copies available as report number PB 2002100819 through the U.S. Department of Commerce, Technology Administration, National Technical Information Service); and

(b) The other provisions of this chapter.

(2) If a provision or definition of the *Food Code* is inconsistent with a provision or definition otherwise established under this chapter, the requirement established under this chapter shall apply.

[Statutory Authority: RCW 43.20.050, 43.20.145 and 69.80.060. 04-22-111, § 246-215-005, filed 11/3/04, effective 5/2/05.]

WAC 246-215-011 Definitions. (1) This section establishes definitions that are additional to those in the *Food Code* or that modify definitions in the *Food Code*.

(2) "Bed and breakfast operation" means a private home or inn offering one or more lodging units on a temporary basis to travelers.

(3) "Catering operation" means a person contracted to prepare food in an approved food establishment for final cooking or service at another location.

(4) "Commissary" means an approved food establishment where food is stored, prepared, portioned, or packaged for service elsewhere.

(5) "Critical item," as defined in *Food Code* subparagraph 1-201-10 (B)(19), does not apply.

(6) "Donated food distributing organization" means a charitable nonprofit organization under section 501(c) of the federal Internal Revenue Code that distributes food free of charge and includes any nonprofit organization that distributes food free of charge to the public.

(7) "Donor" means a person, corporation, association, or other organization that donates food to a donated food distributing organization under the provisions of chapter 69.80 RCW, known as the Good Samaritan Food Donation Act.

(8) "Donor kitchen" means a kitchen that is used by a donor to handle, store, or prepare food for donation to needy persons through a donated food distributing organization and which is not a residential kitchen in a private home.

(9) "Drinking water" means potable water that is supplied in compliance with chapters 246-290 and 246-291 WAC.

(10) "Egg" means the shell egg of the domesticated chicken, turkey, duck, goose, guinea, or any other species of fowl.

(11) "*Food Code*" means the 2001 edition of the *Food Code* of the United States Public Health Service, Food and Drug Administration.

(12) "Food establishment" is amended in *Food Code* subparagraph 1-201.10 (B)(36)(c) to not mean:

(a) An establishment that offers only nonpotentially hazardous foods prepackaged in a licensed food establishment or food processing plant;

(b) An establishment that offers only nonpotentially hazardous, nonready-to-eat, minimally cut, unprocessed fruits and vegetables;

(c) A food processing plant or other establishment for activities regulated by the Washington state department of agriculture or the U.S. Department of Agriculture;

(d) An establishment that offers only nonpotentially hazardous, ready-to-eat foods produced in a licensed food establishment or food processing plant (such as premixed soda pop, powdered creamer, pretzels, cookies, doughnuts, cake, or meat jerky) that are served without direct hand contact, with limited portioning, directly onto or into sanitary single-use articles or single-service articles from the original package;

(e) An establishment that offers only nonpotentially hazardous hot beverages (such as coffee, hot tea, or hot apple cider) served directly into sanitary single-service articles;

(f) An establishment that offers only dry, nonpotentially hazardous, nonready-to-eat foods (such as dry beans, dry grains, in-shell nuts, coffee beans, tea leaves, or herbs for tea);

(g) An establishment that offers only prepackaged frozen confections produced in a licensed food establishment or food processing plant;

(h) A residential kitchen in a private home or other location, if only foods that are nonpotentially hazardous baked goods are prepared and wrapped in a sanitary manner for sale or service by a nonprofit organization operating for religious, charitable, or educational purposes and if the consumer is informed by a clearly visible placard at the sales or service location that the foods are prepared in a kitchen that is not inspected by a regulatory authority;

(i) A location where foods that are prepared as specified in (h) of this subsection are sold or offered for human consumption;

(j) A kitchen in a private home operated as a family day care provider as defined in RCW 74.15.020 (1)(f) or an adult family home as defined in RCW 70.128.010, used only to prepare food for residents and other people for whom the operation is licensed to provide care;

(k) A private home that receives catered or home-delivered food;

(l) A private home or other location used for a private event;

(m) A donor kitchen; and

(n) A location used for a potluck.

(13) "Food worker card" means a food and beverage service worker's permit as required under chapter 69.06 RCW.

(14) "Immediate service" means service to the public within thirty minutes of preparation.

(15) "Imminent health hazard" means a significant threat or danger to health that is considered to exist when there is evidence sufficient to show that a product, practice, circumstance, or event creates a situation that requires immediate correction or cessation of operation to prevent injury based on:

(a) A breakdown or lack of equipment or power causing improper temperature control for potentially hazardous food;

(b) A lack of water preventing adequate handwashing, equipment cleaning, or sanitizing;

(c) An emergency situation caused by accident or natural disaster, such as fire, flood, or building collapse;

(d) A sewage backup or sewage contamination within a food establishment; or

(e) An occurrence of an outbreak of foodborne illness linked to the food establishment.

(16) "Local board of health" means the county or district board of health.

(17) "Local health officer" means the legally qualified physician who has been appointed as the health officer for the county or district public health department.

(18) "Mobile food unit" means a readily movable food establishment.

(19) "Person in charge" means the individual present at a food establishment who is responsible for the operation at the time.

(20) "Potentially hazardous food," is amended in *Food Code* subparagraph 1-201.10 (B)(65)(b) to include "fresh herb-in-oil mixtures," unless modified in a way that results in mixtures that do not support growth as specified under subparagraph 1-201.10 (B)(65)(a).

(21) "Potluck" means an event where:

(a) People are gathered to share food;

(b) People attending are expected to bring food to share;

(c) There is no compensation provided to people for bringing food to the event;

(d) There is no charge for any food or beverage provided at the event; and

(e) The event is not conducted for commercial purposes.

(22) "Private event" means a private gathering restricted to members and guests of members of a family, organization, or club; where the event is not open to the general public; and where food is provided without compensation.

(23) "Public water system" means a drinking water system that is operated in compliance with chapters 246-290 and 246-291 WAC.

(24) "Regulatory authority" means the local, state, or federal enforcement body or authorized representative having jurisdiction over the food establishment. The local board of health, acting through the local health officer, is the regulatory authority for the activity of a food establishment, except as otherwise provided by law.

(25) "Service animal" means an animal that is trained for the purpose of assisting or accommodating a disabled person's sensory, mental, or physical disability.

(26) "Temporary food establishment" means a food establishment:

(a) Operating at a fixed location, with a fixed menu, for not more than twenty-one consecutive days in conjunction with a single event or celebration, such as a fair or festival; or

(b) Operating not more than three days a week at a fixed location, with a fixed menu, in conjunction with an approved, recurring, organized event, such as a farmers market.

[Statutory Authority: RCW 43.20.050, 43.20.145 and 69.80.060. 04-22-111, § 246-215-011, filed 11/3/04, effective 5/2/05.]

WAC 246-215-021 Management and personnel. (1) The permit holder and person in charge of the food establishment must ensure that all food employees are in compliance with the provisions of chapter 69.06 RCW and chapter 246-217 WAC for obtaining and renewing valid food worker cards.

(2) The permit holder and person in charge of the food establishment must display or file the original or a copy of the food worker card of each food employee at the employee's place of employment, to be available for inspection by the regulatory authority upon request.

(3) This section does not add to, or remove from, the provisions of chapter 69.06 RCW and chapter 246-217 WAC regarding food worker cards.

[Statutory Authority: RCW 43.20.050, 43.20.145 and 69.80.060. 04-22-111, § 246-215-021, filed 11/3/04, effective 5/2/05.]

WAC 246-215-031 Employee hygiene. (1) *Food Code* paragraph 2-302.11(B), regarding maintenance of fingernails, is amended to read: "Unless wearing intact gloves in good repair, a food employee may not wear fingernail polish or artificial fingernails while preparing food."

(2) *Food Code* section 2-303.11, regarding the prohibition of jewelry, is amended to read: "While preparing food, food employees may not wear jewelry on their arms or hands. This section does not apply to a wedding or engagement ring covered by a glove in good repair."

[Statutory Authority: RCW 43.20.050, 43.20.145 and 69.80.060. 04-22-111, § 246-215-031, filed 11/3/04, effective 5/2/05.]

WAC 246-215-041 Food supplies. (1) Fluid milk, fluid milk products, dry milk, and dry milk products must meet "Grade A pasteurized" milk standards under chapter 15.36 RCW, except "Grade A raw milk" products meeting standards of chapter 15.36 RCW may be sold in retail stores in the original container for off-premises consumption.

(2) *Food Code* section 3-201.16, regarding obtaining mushrooms picked in the wild from a source where each individual mushroom is inspected by an approved expert, does not apply.

(3) *Food Code* subparagraphs 3-201.17 (A)(3) and 3-201.17 (A)(4), regarding the sale or service of wild game animals, do not apply.

[Statutory Authority: RCW 43.20.050, 43.20.145 and 69.80.060. 04-22-111, § 246-215-041, filed 11/3/04, effective 5/2/05.]

WAC 246-215-051 Public health labeling. (1) Whenever unpasteurized milk and foods containing unpasteurized milk are offered for sale at a food establishment, except hard or semi-soft raw milk cheeses properly fermented and aged for a minimum of sixty days in compliance with 21 CFR Part 133, the permit holder and person in charge must ensure that:

(a) The product is conspicuously labeled "RAW MILK" or "CONTAINS RAW MILK"; and

(b) A sign is posted in a conspicuous manner near the product stating: "WARNING: RAW MILK OR FOODS PREPARED FROM RAW MILK MAY BE CONTAMINATED WITH DANGEROUS BACTERIA CAPABLE OF CAUSING SEVERE ILLNESS. CONTACT YOUR LOCAL HEALTH AGENCY FOR ADVICE OR TO REPORT A SUSPECTED ILLNESS."

(2) The permit holder and person in charge must ensure that required information contained on food labels is in the English language, except that duplicate labeling in other languages is allowed.

(3) *Food Code* paragraph 3-201.11(C), regarding food labeling, is amended to read: "Packaged food shall be labeled as specified under law, including chapter 69.04 RCW; 21 CFR 101 Food Labeling; 9 CFR 317 Labeling, Marking Devices, and Containers; 9 CFR 381 Subpart N Labeling and Containers; and as specified under §§ 3-202.17 and 3-202.18."

(4) *Food Code* paragraph 3-203.11(A), regarding molluscan shellfish original containers, is amended to read: "Except as specified in paragraphs (B), (C), and (D) of this section…"

(5) *Food Code* section 3-203.11, regarding molluscan shellfish original containers, is amended to add a paragraph (D), which reads:

"(D) Shellstock may be removed from the container in which they are received and repacked in consumer self-service containers if:

(1) Each self-service container of shellstock is plainly marked with the harvest area name, harvest area date, and original shellfish dealer's certification number, including the abbreviation of the name of the state or country in which the shellfish are harvested, or otherwise marked with a code that can be used to link the product with tag or label information as specified under § 3-202.18;

(2) The tag or label information as specified under § 3-202.18 for the shellstock is retained in a written or electronic log for 90 days that correlates the date when, or dates during which, the shellstock are sold;

(3) The shellstock are protected from contamination; and

(4) The packaging material allows air to get to the shellfish."

(6) *Food Code* subparagraph 3-203.12 (B)(2)(b), regarding maintaining identification of molluscan shellfish, is amended to read: "Ensuring that shellstock from one tagged or labeled container are not commingled with shellstock from another container harvested on a different day and from a different growing area as identified on the tag or label."

(7) *Food Code* section 3-501.17, regarding date marking, does not apply.

(8) *Food Code* paragraph 3-602.11(A), regarding food labels, is amended to read: "Food packaged in a food establishment shall be labeled as specified in law, including chapter 69.04 RCW; 21 CFR 101 - Food Labeling; and 9 CFR 317 - Labeling, Marking Devices, and Containers."

(9) The consumer advisory provisions of *Food Code* section 3-603.11 also apply to unpasteurized juices of fruits and vegetables.

[Statutory Authority: RCW 43.20.050, 43.20.145 and 69.80.060. 04-22-111, § 246-215-051, filed 11/3/04, effective 5/2/05.]

WAC 246-215-061 Food handling. (1) The pooling of unpasteurized eggs is prohibited, except raw shell eggs may be broken and pooled by a method whereby egg shells are not immersed in the liquid portion of the eggs and only if the eggs are broken and prepared for immediate service in response to a consumer's order.

(2) Overnight unattended cooking and overnight unattended hot holding are prohibited without continuous temperature monitoring under an approved plan.

(3) Paragraph (C) is added to *Food Code* section 3-302.15, regarding washing fruits and vegetables, to read: "Raw vegetables include fresh herbs."

(4) *Food Code* paragraph 3-306.13(A), regarding consumer self-service, is amended to read: "Raw, unpackaged animal food, such as beef, lamb, pork, poultry, and fish may not be offered for consumer self-service. This paragraph does not apply to consumer self-service of ready-to-eat foods at buffets or salad bars that serve foods such as sushi or raw shellfish; ready-to-cook individual portions for cooking and immediate consumption on the premises such as consumer-cooked meats or consumer-selected ingredients for Mongolian barbecue; raw, frozen shrimp, lobster, finfish, calamari, or adductor muscle of scallop; or frozen, breaded seafood."

(5) *Food Code* subparagraph 3-401.11 (A)(1)(a), regarding the minimum cooking temperature and time for eggs, is amended to read: "Unpasteurized eggs, and."

(6) *Food Code* subparagraph 3-401.11 (A)(2), regarding the minimum cooking temperature and time for certain animal foods, is amended to read: "68°C (155°F) for 15 seconds or a temperature and time combination specified in the following chart, provided that food employees monitor both temperature and time under an approved plan, for ratites; injected meats; and comminuted fish, meat, game animals commercially raised for food as specified under subparagraph 3-201.17 (A)(1), and game animals under a voluntary inspection program as specified under subparagraph 3-201.17 (A)(2)."

(7) *Food Code* subparagraph 3-401.11 (A)(3), regarding the minimum cooking temperature and time for certain animal foods, is amended to read: "74°C (165°F) or above for 15 seconds for poultry; wild game animals; stuffed fish; stuffed meat; stuffed pasta; stuffed poultry; stuffed ratites; or stuffing containing fish, meat, poultry, or ratites."

(8) As alternatives to the cooling provisions of *Food Code* paragraph 3-501.14(A), the following rapid cooling procedures are allowed:

(a) Continuous cooling of foods in a shallow layer of two inches or less, uncovered, protected from cross-contamination, in cooling equipment maintaining an ambient temperature of 5°C (41°F) or less; or

(b) Continuous cooling of intact pieces of uncomminuted meat no greater than four inches thick, uncovered, unwrapped, not touching other pieces of food, protected from cross-contamination, in cooling equipment maintaining an ambient temperature of 5°C (41°F) or less.

(9) *Food Code* paragraph 3-501.16(A), regarding potentially hazardous food hot and cold holding, is amended to read:

"Except during active preparation for up to two hours, cooking, or cooling, or…"

[Statutory Authority: RCW 43.20.050, 43.20.145 and 69.80.060. 04-22-111, § 246-215-061, filed 11/3/04, effective 5/2/05.]

WAC 246-215-071 Equipment and utensils. (1) Containers for display and service of ready-to-eat, unpackaged, bulk foods for consumer self-service must have a consumer access point no less than thirty inches above floor level, except for approved containers of liquids.

(2) *Food Code* paragraph 3-304.12(F), regarding storage of in-use utensils, is amended to read: "In a container of water maintained at a temperature of 60°C (140°F) or greater or 5°C (41°F) or less and the container is cleaned at a frequency specified under subparagraph 4-602.11 (D)(7)."

(3) *Food Code* paragraph 4-501.11(C), regarding equipment repair, is amended to read: "Cutting or piercing parts of can openers shall be replaced as needed to minimize the creation of metal fragments that can contaminate food when the container is opened."

(4) *Food Code* subparagraph 4-602.11 (D)(7), regarding the cleaning frequency for food contact surfaces and utensils, is amended to read: "In-use utensils are intermittently stored in a container of water maintained at a temperature of 60°C (140°F) or greater or 5°C (41°F) or less and the container is

cleaned at least every twenty-four hours or at a frequency necessary to preclude accumulation of soil residues."

[Statutory Authority: RCW 43.20.050, 43.20.145 and 69.80.060. 04-22-111, § 246-215-071, filed 11/3/04, effective 5/2/05.]

WAC 246-215-081 Water, plumbing, and waste. (1) Handwashing sinks in food establishments must be adequately sized to allow a food employee to wash both hands simultaneously.

(2) Food establishments must have designated food preparation sinks that are:

(a) Sufficient in number and size to wash, soak, rinse, drain, cool, thaw, or otherwise process any food that requires placement in a sink;

(b) Appropriate for the menu, method of food preparation, and volume of food prepared; and

(c) Not used for handwashing, utensil washing, or other activities that could contaminate food.

(3) Bottled drinking water used or sold for food service must be obtained from approved sources in accordance with chapters 246-290 and 246-291 WAC.

(4) Water used in food establishments must meet drinking water quality standards in accordance with chapters 246-290 and 246-291 WAC, except as specified under *Food Code* section 5-102.12.

(5) *Food Code* paragraph 5-203.11(C), regarding use of treated towelettes for handwashing, does not apply.

[Statutory Authority: RCW 43.20.050, 43.20.145 and 69.80.060. 04-22-111, § 246-215-081, filed 11/3/04, effective 5/2/05.]

WAC 246-215-091 Physical facilities. (1) The food establishment permit holder must ensure that toilet rooms are conveniently located within two hundred feet of the food establishment and accessible to employees during all hours of operation.

(2) The food establishment permit holder must ensure that toilet rooms are conveniently located and accessible to patrons during all hours of operation if:

(a) The establishment has customer seating for on-premises consumption; and

(b) The establishment was constructed or extensively remodeled after May 1, 1992.

(3) Toilet rooms in food establishments may be used jointly by patrons and employees, provided patrons accessing the toilet rooms are excluded from food preparation areas and unpackaged food storage areas.

(4) *Food Code* section 6-202.110, regarding outdoor refuse storage areas, does not apply.

[Statutory Authority: RCW 43.20.050, 43.20.145 and 69.80.060. 04-22-111, § 246-215-091, filed 11/3/04, effective 5/2/05.]

WAC 246-215-121 Mobile food units. (1) The permit holder and person in charge of a mobile food unit must comply with the requirements of this chapter, except as otherwise provided in this section.

(2) The permit holder must obtain approval from other applicable regulating agencies prior to operating a mobile food unit, including the Washington state department of labor and industries.

(3) The person in charge of a mobile food unit must operate the mobile food unit from an approved commissary or servicing area and shall return to such location for supplies, thorough cleaning, and other servicing activities, as approved in a plan of operation. When not in operation, a mobile food unit must be stored at an approved servicing area or other approved location.

(4) The regulatory authority may impose additional requirements to protect against health hazards related to the operation of a mobile food unit and may:

(a) Limit the food preparation steps;

(b) Prohibit some menu items; and

(c) Restrict the mode of operation when facilities or equipment are inadequate to protect public health.

(5) The owner of a mobile food unit must submit a properly prepared plan of operation with specifications of the mobile food unit, commissary, and servicing area to the regulatory authority for approval before:

(a) Construction or remodeling begins;

(b) The menu of the mobile food unit is changed;

(c) The method of food preparation is changed;

(d) The vehicle is changed; or

(e) The commissary is changed.

(6) The owner of a mobile food unit must include in the plan required by subsection (5) of this section:

(a) Menu and food preparation steps;

(b) Floor plan;

(c) Equipment specifications and location;

(d) Finish schedule;

(e) Proposed itinerary or sites to be served;

(f) Source of water and specifications of the on-board plumbing;

(g) Site used for sewage disposal;

(h) Availability of restrooms for employees;

(i) Operating procedures; and

(j) Cleaning schedule.

(7) The person in charge of a mobile food unit must ensure:

(a) Only employees and other persons authorized by the regulatory authority are present in the mobile food unit; and

(b) All employees are in compliance with the provisions of chapter 69.06 RCW and chapter 246-217 WAC for obtaining and renewing valid food worker cards, unless all foods are prepackaged and are nonpotentially hazardous.

(8) The person in charge of a mobile food unit must ensure:

(a) All foods, including ice, are from an approved source or commissary;

(b) Potentially hazardous foods prepared on the mobile food unit are served the same day that they are prepared;

(c) Prepackaged foods are properly labeled;

(d) Only single-service articles are provided for use by the customer; and

(e) Condiments not in individual packages are provided in dispenser bottles or in other containers protected from contamination.

(9) The person in charge of a mobile food unit must ensure that potentially hazardous foods are:

(a) Not cooled on the mobile food unit;

(b) Properly temperature-controlled during transport to the place of service;

(c) Temperature-monitored by use of a stem-type thermometer or thermocouple capable of measuring all proper food temperatures;

(d) Reheated, for hot holding, from 45°F to 165°F or above within one hour on the mobile food unit when the foods were cooked and cooled in an approved nonmobile food establishment;

(e) Reheated, for hot holding, from 45°F to 140°F or above within one hour on the mobile food unit when the foods were produced in a food processing plant;

(f) Reheated no more than one time; and

(g) Held in preheated mechanical hot holding equipment or prechilled mechanical cold holding equipment, or otherwise temperature controlled by an approved method.

(10) The person in charge must ensure that raw meats greater than one inch in thickness are not cooked on the mobile food unit, unless otherwise approved.

(11) The person in charge must ensure that the water system on the mobile food unit:

(a) Is supplied from an approved source of water;

(b) Is designed and constructed in an approved manner;

(c) Is filled from the approved water source through a food-grade hose;

(d) Is refilled as frequently as necessary to furnish enough hot and cold water for handwashing, food preparation, utensil cleaning, sanitizing, and facility cleaning, on the mobile food unit;

(e) Has a water supply tank with a minimum capacity of five gallons for handwashing;

(f) Stores liquid waste in a wastewater retention tank with at least fifteen percent more capacity than the water supply tank; and

(g) Retains wastewater on the mobile food unit until disposed of by an approved method.

(12) The person in charge of the mobile food unit must ensure that a separate handwashing facility for employees is accessible at all times of operation and includes:

(a) A sink with potable, warm, running water;

(b) Soap; and

(c) Paper towels.

(13) When only prepackaged food items are served, the regulatory authority may waive or modify requirements for handwashing on the mobile food unit.

(14) The permit holder must ensure approved toilet facilities are available for employees:

(a) Readily accessible within two hundred feet of the mobile food unit during times of operation, if at any one location for more than one hour; and

(b) Provided with handwashing facilities with potable, warm, running water.

(15) The permit holder must ensure:

(a) A three-compartment sink is available on the mobile food unit with potable hot and cold running water to wash, rinse, and sanitize utensils when utensils are reused on the mobile food unit; except

(b) This requirement may be waived or modified by the regulatory authority when:

(i) Limited food preparation occurs; or

(ii) Additional clean utensils are available and utensil washing takes place at an approved commissary or servicing area.

(16) The permit holder must provide the regulatory authority a designated business name and ensure that name is posted on the mobile food unit in a manner easily visible to customers during operation.

(17) The permit holder must ensure the original or a copy of the currently valid food establishment permit is posted on the mobile food unit in a manner easily visible to customers during operation.

(18) The permit holder and person in charge must ensure overhead protection is provided at the site of operation of the mobile food unit for all food handling activities.

(19) The permit holder and person in charge must ensure that all food, equipment, utensils, and other food service supplies are contained on the mobile food unit, at the approved commissary, at the approved servicing area, or as otherwise approved in the plan of operation.

(20) The menu of a mobile food unit that can be moved between locations by being pushed by a single person must be limited to nonpotentially hazardous foods, hot dogs, and espresso drinks, unless otherwise approved.

(21) The regulatory authority may allow a person to operate a food establishment with a limited menu in a movable building without permanent plumbing under applicable provisions of this section.

[Statutory Authority: RCW 43.20.050, 43.20.145 and 69.80.060. 04-22-111, § 246-215-121, filed 11/3/04, effective 5/2/05.]

WAC 246-215-131 Temporary food establishments. (1) The permit holder and person in charge of a temporary food establishment must comply with the requirements of this chapter, except as otherwise provided in this section.

(2) The regulatory authority may impose additional requirements to protect against health hazards related to the operation of the temporary food establishment and may:

(a) Limit the food preparation steps;

(b) Prohibit some menu items; and

(c) Restrict the mode of operation when facilities or equipment are inadequate to protect public health.

(3) The owner of a temporary food establishment must:

(a) Apply to the regulatory authority for a permit to operate the temporary food establishment at least fourteen calendar days before intending to provide food service, or as otherwise required by the regulatory authority;

(b) Allow only employees and other persons authorized by the regulatory authority to be present in the temporary food establishment; and

(c) Require the person in charge of the temporary food establishment to obtain a valid food worker card before beginning work.

(4) The person in charge of a temporary food establishment must ensure:

(a) Adequate facilities are provided at the temporary food establishment for all necessary food preparation steps;

(b) All foods, including ice, are from an approved source;

(c) All off site food preparation is done in an approved food establishment;

(d) All storage of food and equipment is done at approved locations;

(e) Food is transported and stored in properly designed food-grade containers;

(f) Food is protected from potential contamination during transport;

(g) Only single-service articles are provided for use by consumers, unless otherwise approved by the regulatory authority; and

(h) Condiments not in individual packages are provided in dispenser bottles or in other containers protected from contamination.

(5) The person in charge of a temporary food establishment must ensure that potentially hazardous foods are:

(a) Not cooled in a temporary food establishment;

(b) Properly temperature-controlled during transport to the temporary event location;

(c) Temperature-monitored by use of a stem-type thermometer or thermocouple capable of measuring all proper food temperatures;

(d) Reheated, for hot holding, from 45°F to 165°F or above within one hour when cooked and cooled in an approved food establishment;

(e) Reheated, for hot holding, from 45°F to 140°F or above within one hour when produced in a food processing plant;

(f) Reheated no more than one time; and

(g) Held in preheated mechanical hot holding equipment or prechilled mechanical cold holding equipment, or otherwise temperature controlled by an approved method.

(6) The person in charge of a temporary food establishment must ensure potentially hazardous foods that are thawed as part of a continuous cooking process are not greater than four inches thick.

(7) The person in charge of a temporary food establishment must ensure a separation barrier or other effective method is used to protect food preparation and cooking areas from public access.

(8) The permit holder of a temporary food establishment must ensure approved handwashing facilities are conveniently located for employees in all food preparation areas, which include:

(a) Potable, warm, running water;

(b) Soap and paper towels;

(c) A five-gallon or larger insulated container kept supplied with warm water for handwashing delivered through a continuous-flow spigot, if permanent plumbing is not available; and

(d) A wastewater retention tank sufficient in size to hold all wastewater generated by the temporary food establishment until emptied in an approved manner, if a public sewage system hookup is not available.

(9) The permit holder of a temporary food establishment must ensure approved toilet facilities are available for employees:

(a) Readily accessible during all times of operation; and

(b) Provided with handwashing facilities with potable, warm, running water.

(10) The permit holder of a temporary food establishment must ensure access within two hundred feet to a three-compartment sink with approved drain boards and an adequate supply of hot and cold running water to wash, rinse, and sanitize utensils when:

(a) Equipment or utensils are reused on-site; or

(b) The temporary food establishment operates for two or more consecutive days; except

(c) The regulatory authority may approve an alternative utensil cleaning method when three-compartment sinks with drain boards are not available and no health hazard will result.

(11) The permit holder and person in charge must ensure a separate food preparation sink is available at the temporary food establishment that is supplied with potable running water, drained to an approved wastewater system through an indirect connection, if produce needs to be washed on-site. Alternative produce washing facilities may be used if approved.

[Statutory Authority: RCW 43.20.050, 43.20.145 and 69.80.060. 04-22-111, § 246-215-131, filed 11/3/04, effective 5/2/05.]

WAC 246-215-141 Bed and breakfast operations. (1) The permit holder and person in charge of a bed and breakfast operation must comply with the requirements of this chapter, except as otherwise provided in this section.

(2) The regulatory authority may impose additional requirements to protect against health hazards related to the food service portion of a bed and breakfast operation.

(3) Food may be handled in the residential kitchen of a bed and breakfast operation without meeting the provisions of *Food Code* sections 2-301.15, 4-202.15, 4-202.16, 4-202.17, 4-203.13, 4-204.12, 4-204.16, 4-204.113, 4-204.115, 4-204.118, 4-204.120, 4-301.14, 4-302.13, 4-302.14, 4-402.11, 4-402.12, 4-501.11, 4-501.13, 4-501.16, 4-501.110, 4-501.112, 4-501.113, 4-501.116, 4-602.12, 4-703.11, 4-904.13, 5-203.13; parts 4-8 and 5-5; and chapters 6 and 7, if:

(a) The number of guest bedrooms does not exceed eight;

(b) Food service is limited to overnight guests;

(c) Breakfast is the only meal prepared; however, nonpotentially hazardous baked goods may be prepared and served at any time of the day;

(d) Potentially hazardous foods are prepared for immediate service only; and

(e) Potentially hazardous foods are not cooled for later reheating.

(4) If food service is provided in a bed and breakfast operation other than under the conditions of subsection (3) of this section, all foods must be prepared in an approved nonresidential kitchen meeting the requirements of this chapter.

(5) The person in charge of a bed and breakfast operation must ensure:

(a) Food supplies for personal use are separated from food supplies intended for guest use;

(b) Food contact surfaces are thoroughly cleaned before each use;

(c) A sink for handwashing is accessible and conveniently located for use by food employees during all times food is prepared for bed and breakfast guests;

(d) Each sink used for handwashing is provided with a supply of hand soap and single use towels or other approved hand-drying device;

(e) Refuse, recyclables, and returnables are stored in a manner that does not create a public health hazard or nuisance;

(f) The premises are maintained to control insects, rodents, and other pests;

(g) Children under age ten and animals are kept out of food preparation areas during all times food is prepared for bed and breakfast guests; and

(h) Toxic chemicals are stored in accurately labeled containers away from all foods and food service supplies.

(6) The kitchen of a bed and breakfast operation must have at least the following facilities for cleaning and sanitizing food contact utensils and equipment and to allow handwashing in a separate sink basin from one used for food preparation:

(a) A three-compartment sink; or

(b) Two sink basins plus a home-style dishwasher with a sanitizing cycle providing 155°F or hotter water.

[Statutory Authority: RCW 43.20.050, 43.20.145 and 69.80.060. 04-22-111, § 246-215-141, filed 11/3/04, effective 5/2/05.]

WAC 246-215-151 Donated food distributing organizations. (1) A donated food distributing organization must comply with the requirements of this chapter, except as otherwise provided in this section.

(2) A donated food distributing organization is exempt from the provisions of WAC 246-215-200 and part 8-3 of the *Food Code*, regarding operating with a valid food establishment permit.

(3) A donated food distributing organization must notify the regulatory authority in writing or by another approved manner:

(a) Annually of the nature of its food service activities, including types of food served or distributed; and

(b) Whenever there is a significant change in its food service activities.

(4) A donated food distributing organization is exempt from meeting the provisions of *Food Code* sections 2-301.15, 3-202.11, 3-602.11, 4-202.15, 4-202.16, 4-202.17, 4-203.13, 4-204.12, 4-204.16, 4-204.113, 4-204.115, 4-204.118, 4-204.120, 4-301.14, 4-302.13, 4-302.14, 4-402.11, 4-402.12, 4-501.11, 4-501.13, 4-501.16, 4-501.110, 4-501.112, 4-501.113, 4-501.116, 4-602.12, 4-703.11, 4-904.13, 5-203.13; parts 4-8 and 5-5; and chapters 6 and 7, if:

(a) All foods are donated to needy persons under the provisions of chapter 69.80 RCW;

(b) Potentially hazardous food items are served within eight hours of preparation; and

(c) Potentially hazardous food items are not cooled and reheated on-site.

(5) The person in charge of a donated food distributing organization must ensure:

(a) Equipment for cold holding, heating, and hot holding foods are sufficient in number and capacity to provide food temperatures specified in chapter 3 of the *Food Code*;

(b) Food contact surfaces are thoroughly cleaned before each use;

(c) A sink for handwashing is accessible and conveniently located for use by food employees during all times of food preparation and service of unwrapped foods;

(d) Each sink used for handwashing is provided with a supply of hand soap and single use towels or other approved hand-drying device;

(e) Refuse, recyclables, and returnables are stored in a manner that does not create a public health hazard or nuisance;

(f) The premises are maintained to control insects, rodents, and other pests;

(g) Children under age ten and animals are kept out of food preparation areas during the preparation of foods; and

(h) Toxic chemicals are stored in accurately labeled containers away from all foods and food service supplies.

(6) A donated food distributing organization must have at least the following facilities available for handwashing and cleaning of food contact utensils and equipment:

(a) A three-compartment sink; or

(b) Two sink basins plus a home-style dishwasher with a sanitizing cycle providing 155°F or hotter water; or

(c) As otherwise approved.

(7) A donated food distributing organization may receive foods for charitable purposes that include:

(a) Surplus foods from a food establishment;

(b) Muscle meat of a wild game animal:

(i) Received from a law enforcement officer certified by a jurisdiction in the state of Washington or from a hunter licensed by the department of fish and wildlife;

(ii) Processed by an approved meat cutter; and

(iii) Labeled "UNINSPECTED WILD GAME MEAT, THOROUGHLY COOK TO 165°F INTERNAL TEMPERATURE";

(c) Muscle meat of a domesticated livestock animal, poultry, or rabbit:

(i) Donated live to the distributing organization;

(ii) Raised by a member of an approved youth club, such as 4H;

(iii) Processed by an approved meat cutter; and

(iv) Labeled "UNINSPECTED MEAT, THOROUGHLY COOK TO 165°F INTERNAL TEMPERATURE";

(d) Foods properly handled, stored, or prepared in a donor kitchen;

(e) Nonpotentially hazardous, nonready-to-eat foods handled or stored in a residential kitchen in a private home; and

(f) Nonpotentially hazardous baked goods handled, stored, or prepared in a residential kitchen in a private home.

(8) The person in charge of a donated food distributing organization must ensure that foods are inspected upon receipt and information is obtained from donors in order to determine:

(a) Foods are safe and free from adulteration;

(b) Surplus foods have not been previously served to a person;

(c) Potentially hazardous foods have been kept under continuous temperature control above 140°F or below 45°F during handling, storage, and transport, except for a maximum of two hours during preparation;

(d) Foods have been protected from contamination during handling and storage by intact original commercial packaging or sanitary food-grade containers; and

(e) Foods have been handled and transported in separate containers as needed to prevent potential cross-contamination between ready-to-eat and nonready-to-eat foods.

(9) A donated food distributing organization must not serve or distribute:

(a) Home-canned foods;

(b) Canned foods in containers that are rusty or severely dented;

(c) Distressed foods (such as from a fire, flood, or prolonged storage) unless the foods have been evaluated and approved for charitable distribution; or

(d) Infant formula that is past the original expiration date set by the processor.

(10) A donated food distributing organization may distribute packaged foods without complete label information on each individual container, provided that:

(a) Each container is labeled with the common name of the food; and

(b) The label information, according to the provisions of chapter 69.04 RCW, is on the master carton or is posted in plain view on a card, sign, or other method of notice at the point of distribution to the consumer.

(11) The person in charge of a donated food distributing organization receiving potentially hazardous foods or nonpotentially hazardous, ready-to-eat foods not prepackaged in a food processing plant must keep records for thirty days documenting the source, quantity, type, and receiving date of the foods.

[Statutory Authority: RCW 43.20.050, 43.20.145 and 69.80.060. 04-22-111, § 246-215-151, filed 11/3/04, effective 5/2/05.]

WAC 246-215-181 Compliance and enforcement. (1) *Food Code* subparagraph 8-304.11 (G)(2), regarding replacement of facilities and equipment to meet current standards when the ownership of a food establishment changes, does not apply.

(2) *Food Code* subparagraph 8-401.10 (B)(2), regarding inspection frequency, is amended to read: "The food establishment is assigned a less frequent inspection frequency based on a written risk-based inspection schedule developed by the regulatory authority, or set by state or federal law, and uniformly applied throughout the jurisdiction."

(3) *Food Code* paragraph 8-401.10(C), regarding inspection frequency of temporary food establishments, is amended to read: "The regulatory authority shall inspect a temporary food establishment during its permit period, unless the regulatory authority develops a written risk-based plan for exempting certain categories of temporary establishments from inspection that is uniformly applied throughout the jurisdiction."

(4) *Food Code* paragraph 8-401.20(A), regarding criteria for prioritizing inspections, is amended to read: "Past performance, for nonconformance with code or HACCP plan requirements."

(5) *Food Code* paragraph 8-401.20(B), regarding criteria for prioritizing inspections, is amended to read: "Past performance, for numerous or repeat violations of code or HACCP plan requirements."

(6) *Food Code* section 8-401.20, regarding criteria for prioritizing inspections, is amended to add a paragraph (H) to read: "Whether the establishment is properly implementing an approved self-inspection program."

(7) *Food Code* subparagraph 8-402.20 (A)(3) and section 8-402.40, regarding obtaining an inspection order, do not apply. The regulatory authority may suspend a person's permit to operate a food establishment if a representative of the regulatory authority, after showing proper credentials, is denied access to conduct an inspection of the food establishment.

(8) *Food Code* section 8-403.10, regarding documenting information and observations, is amended to read: "The regulatory authority shall document on an inspection report form approved by the department of health."

(9) *Food Code* subparagraph 8-403.10 (B)(2), regarding documenting information on an inspection report form, is amended to read: "Failure of food employees and the person in charge to demonstrate knowledge of their responsibility to report a disease or medical condition."

(10) *Food Code* subparagraph 8-403.10 (B)(3), regarding documenting information on an inspection report form, is amended to read: "Nonconformance with this code."

(11) *Food Code* section 8-403.20, regarding specifying a time frame for corrections, is amended to read: "The regulatory authority shall specify on the inspection report form the time frame for correction of any violations."

(12) *Food Code* sections 8-405.11 and 8-405.20, regarding critical violations, do not apply.

(13) *Food Code* section 8-406.11, regarding noncritical violations, does not apply.

[Statutory Authority: RCW 43.20.050, 43.20.145 and 69.80.060. 04-22-111, § 246-215-181, filed 11/3/04, effective 5/2/05.]

WAC 246-215-191 Exempt from permit. (1) The regulatory authority may exempt a person from the provisions of WAC 246-215-200(1) and section 8-301.11 of the *Food Code* in order to operate without a food establishment permit, provided that the person meets the other provisions of this chapter, including not using any food prepared in a residential kitchen or other nonapproved facility, and the types of food served are limited to those specified in subsection (4) of this section.

(2) The person requesting a permit exemption under subsection (1) of this section must submit a written application for an exemption on a form provided by the regulatory authority at least fourteen calendar days before providing food service, or as otherwise required by the regulatory authority.

(3) The person requesting a permit exemption under subsection (1) of this section must submit properly prepared plans and specifications of the food service facilities and equipment if the regulatory authority requires it, based on a review of the application for an exemption submitted under subsection (2) of this section.

(4) The person requesting a permit exemption under subsection (1) of this section must limit food handling to one or more of the following foods:

(a) Popcorn and flavored popcorn;

(b) Cotton candy;

(c) Dried herbs and spices processed in an approved facility;

(d) Machine-crushed ice drinks containing nonpotentially hazardous ingredients and made with ice from an approved source;

(e) Corn on the cob;

(f) Whole peppers roasted for immediate service;

(g) Roasted nuts and roasted candy-coated nuts;

(h) Deep-fried pork skins prepared from pork skins rendered at a food processing plant;

(i) Caramel apples;

(j) Chocolate-dipped ice cream bars prepared from prepackaged ice cream bars produced in a food processing plant;

(k) Chocolate-dipped bananas prepared from bananas peeled and frozen in an approved facility; and

(l) Individual samples of nonpotentially hazardous sliced fruits and vegetables.

[Statutory Authority: RCW 43.20.050, 43.20.145 and 69.80.060. 04-22-111, § 246-215-191, filed 11/3/04, effective 5/2/05.]

WAC 246-215-200 Permits required, suspension, revocation, enforcement. (1) Any person operating a food establishment operating a food establishment without a valid permit issued by the regulatory authority may be guilty of a misdemeanor under RCW 70.05.120 and local regulations.

(2) The regulatory authority may suspend any permit to operate a food establishment if:

(a) Continued operation of the food establishment constitutes an imminent or actual health hazard;

(b) Operations, facilities, or equipment in the food establishment fail to comply with these regulations;

(c) The permit holder does not comply with these regulations; or

(d) Interference with the regulatory authority in the performance of its duties has occurred.

(3) When the regulatory authority has suspended a food establishment permit, the permit holder or person in charge:

(a) Will be notified in writing by the regulatory authority that the food establishment permit is immediately suspended upon service of the notice;

(b) Must immediately cease all food service operations until a hearing with the regulatory authority finds the operation to be in compliance with the requirements of these regulations;

(c) May request a hearing by filing a written request for a hearing with the regulatory authority within ten days of receipt of the notice of suspension; and

(d) Will be notified, if a written request for a hearing is not filed within ten days, that the suspension is sustained.

(4) Any person whose food establishment permit has been suspended may at any time make written application for a reinspection for the purpose of reinstatement of the permit. The application must include a signed statement explaining how the conditions causing the suspension of the permit have been corrected.

(5) Within two working days following receipt of a written request for a reinspection, the regulatory authority will make a reinspection, and reinstate the permit if the person is in compliance with these regulations.

(6) The regulatory authority may adopt and use a permit suspension process different than specified under subsections (2), (3), (4), or (5) of this section.

(7) The regulatory authority may revoke a food establishment permit after providing the permit holder an opportunity for a hearing if:

(a) Serious and repeated violation(s) of any requirements of these regulations have occurred; or

(b) Repeated interference with, or assault upon a representative of the regulatory authority in the performance of his/her duty, has occurred.

(8) Before revocation, the regulatory authority will notify, in writing, the permit holder of the specific reason(s) why the permit is to be revoked. The notice will state:

(a) That the permit will be revoked at the end of the ten days following the notice unless a written request for a hearing is filed with the regulatory authority by the permit holder within such ten-day period; and

(b) If a request for a hearing is not filed by the permit holder within the ten-day period, the revocation of the permit becomes final.

(9) Any person whose food establishment permit has been revoked by the regulatory authority, after a period of six months, may:

(a) Make written application for a new permit; and

(b) Request a hearing with the regulatory authority to determine whether a new permit will be issued.

(10) The regulatory authority may use a permit revocation process different than specified under subsections (7), (8), and (9) of this section.

(11) The regulatory authority may initiate any one, or a combination of, compliance methods that include, but are not limited to:

(a) Holding an administrative conference with the food establishment permit holder or person in charge;

(b) Placing the food establishment on probation;

(c) Setting conditions for continued operation of the food establishment, by the permit holder, during the probation period;

(d) Requiring additional education and/or training of employees, management, and owners of the food establishment; and

(e) Completing a hazard analysis critical control point (HACCP) evaluation and requiring monitoring procedures be implemented for critical control points identified.

[Statutory Authority: RCW 43.20.050, 43.20.145 and 69.80.060. 04-22-111, § 246-215-200, filed 11/3/04, effective 5/2/05. Statutory Authority: RCW 43.20.050. 92-08-112 (Order 261B), § 246-215-200, filed 4/1/92, effective 5/2/92.]

WAC 246-215-210 Service of notices. (1) A notice provided for in these regulations is properly served when it is:

(a) Delivered to the permit holder;

(b) Delivered to the person in charge of the food establishment; or

(c) Sent by registered or certified mail, return receipt requested, to the last known address of the permit holder.

(2) A copy of the notice will be filed in the records of the regulatory authority.

[Statutory Authority: RCW 43.20.050, 43.20.145 and 69.80.060. 04-22-111, § 246-215-210, filed 11/3/04, effective 5/2/05. Statutory Authority: RCW 43.20.050. 92-08-112 (Order 261B), § 246-215-210, filed 4/1/92, effective 5/2/92.]

WAC 246-215-220 Hearings. (1) The hearings provided for in these regulations will be:

(a) Conducted by the regulatory authority or its designee; and

(b) Conducted at a time and place designated by the regulatory authority.

(2) The regulatory authority or designee will:

(a) Make a final finding based upon the complete hearing record;

(b) Sustain, modify, or rescind any notice or order considered in the hearing; and

(c) Furnish a written report of the hearing decision to the holder of the permit.

(3) The regulatory authority may adopt and use an alternate hearing process.

[Statutory Authority: RCW 43.20.050, 43.20.145 and 69.80.060. 04-22-111, § 246-215-220, filed 11/3/04, effective 5/2/05. Statutory Authority: RCW 43.20.050. 92-08-112 (Order 261B), § 246-215-220, filed 4/1/92, effective 5/2/92.]

WAC 246-215-240 Examination, hold orders, condemnation, and destruction of food. (1) The permit holder or person in charge of a food establishment in which food has been improperly handled, stored, or prepared must:

(a) Voluntarily destroy the questionable food; or

(b) Contact the regulatory authority to determine if the food is safe for human consumption.

(2) The permit holder or person in charge of a food establishment must denature or destroy any food if the regulatory authority determines the food presents an imminent or actual health hazard.

(3) The regulatory authority may examine or collect samples of food as often as necessary for enforcement of these regulations.

(4) The regulatory authority may, after notice to the permit holder or person in charge, place a written hold order on any suspect food until a determination on its safety can be made and will:

(a) Tag;

(b) Label; or

(c) Otherwise identify any food subject to the hold order and complete a form approved by the department of health for all suspect food.

(5) The hold order issued by the regulatory authority will include:

(a) Instructions for filing a written request for a hearing with the regulatory authority within ten calendar days; and

(b) Notification that if a hearing is not requested in accordance with the instructions provided in the hold order, and the regulatory authority does not vacate the hold order, the food must be destroyed under the supervision of a representative of the regulatory authority.

(6) When food is subject to a hold order by the regulatory authority, the permit holder and person in charge are prohibited from:

(a) Using;

(b) Serving; or

(c) Moving the food from the food establishment.

(7) The regulatory authority may permit storage of food under conditions specified in the hold order, unless storage is not possible without risk to the public health, in which case, immediate destruction will be ordered and must be accomplished by the permit holder or person in charge of the food establishment.

(8) Based upon evidence provided at the hearing, the regulatory authority may either:

(a) Vacate the hold order; or

(b) Direct the permit holder or person in charge of the food establishment by written order to:

(i) Denature or destroy such food; or

(ii) Bring the food into compliance with the provisions of these regulations.

[Statutory Authority: RCW 43.20.050, 43.20.145 and 69.80.060. 04-22-111, § 246-215-240, filed 11/3/04, effective 5/2/05. Statutory Authority: RCW 43.20.050. 92-08-112 (Order 261B), § 246-215-240, filed 4/1/92, effective 5/2/92.]

WAC 246-215-251 Employee health. (1) The provisions of this section replace the provisions of *Food Code* part 2-2, regarding employee health.

(2) Food employees must not work in or around any place where unwrapped or unpackaged food or beverage products are prepared, sold, or offered for sale if they know themselves to have:

(a) A symptom of gastrointestinal infection such as diarrhea, vomiting, or jaundice, except as provided in subsection (9) of this section;

(b) A diagnosed infection by a disease agent that can be transmitted from a food employee through food, including *Salmonella* spp., *Shigella* spp., shiga toxin-producing *Escherichia coli*, or hepatitis A virus; or

(c) A lesion that appears inflamed or contains pus, such as a boil or infected wound, and that is not covered with:

(i) An impermeable cover and a single use glove if the lesion is on a hand or wrist;

(ii) An impermeable cover if the lesion is on an arm; or

(iii) A dry, durable, tight fitting bandage if the lesion is on another part of the body.

(3) Food employees must immediately report to the person in charge when they know they have:

(a) A symptom of gastrointestinal infection, as described in subsection (2)(a) of this section;

(b) A diagnosed infection by a disease agent that can be transmitted from a food employee through food, including *Salmonella* spp., *Shigella* spp., shiga toxin-producing *Escherichia coli*, or hepatitis A virus; or

(c) A lesion that appears inflamed or contains pus and that is not covered as described in subsection (2)(c) of this section.

(4) The person in charge of the food establishment must notify the regulatory authority about any food employee known to have:

(a) Jaundice, except as provided in subsection (9) of this section; or

(b) An infection by a disease agent that can be transmitted from a food employee through food, including *Salmonella* spp., *Shigella* spp., shiga toxin-producing *Escherichia coli*, or hepatitis A virus.

(5) The person in charge of a food establishment must restrict any food employee from working in or around any place where unwrapped or unpackaged food or beverage

products are prepared, sold, or offered for sale who is known to have:

(a) A symptom of gastrointestinal infection such as diarrhea, vomiting, or jaundice, except as provided in subsection (9) of this section;

(b) An infection by a disease agent that can be transmitted from a food employee through food including *Salmonella* spp., *Shigella* spp., shiga toxin-producing *Escherichia coli*, or hepatitis A virus; or

(c) A lesion that appears inflamed or contains pus and that is not covered as described in subsection (2)(c) of this section.

(6) If the population served by the food establishment is a highly susceptible population, the person in charge must exclude from the establishment any food employee who is known to have:

(a) A current symptom of diarrhea, vomiting, or jaundice, except as provided in subsection (9) of this section;

(b) An infection by *Salmonella Typhi* within the last three months unless approved to be released from exclusion by the regulatory authority; or

(c) An infection by *Shigella* spp., shiga toxin-producing *Escherichia coli*, hepatitis A virus, or a *Salmonella* spp. other than *Salmonella Typhi* within the last month unless approved to be released from exclusion by the regulatory authority.

(7) The person in charge of a food establishment and all employees must cooperate with public health officials investigating:

(a) An illness outbreak associated with food;

(b) An illness outbreak suspected to be associated with food; or

(c) A food employee suspected to be infected with a disease agent that can be transmitted from a food employee through food.

(8) The person in charge of a food establishment and food employees must comply with orders issued by the regulatory authority for excluding employees from a food establishment or restricting employee activities due to a diagnosed or suspected infection by a disease agent that can be transmitted from a food employee through food until the regulatory authority rescinds the order based on:

(a) Provisions of *Food Code* part 8-5, regarding prevention of foodborne disease transmission by employees; or

(b) Disease information contained in *Control of Communicable Diseases Manual*, 17th edition, James Chin (editor), American Public Health Association, 2000.

(9) A food employee with a symptom of gastrointestinal illness, such as diarrhea or jaundice, may work in food service without special restriction, provided that the food employee furnishes written medical documentation to the regulatory authority from a licensed physician, nurse practitioner, or physician assistant that the symptom is due to a medical condition not transmissible through food, such as Crohn's disease, irritable bowel syndrome, ulcerative colitis, or hepatitis C.

(10) *Food Code* paragraph 8-501.40(C), regarding releasing a food employee from restriction or exclusion, is amended to read: "A food employee who was infected with *Shigella* spp., shiga toxin-producing *Escherichia coli*, or a *Salmonella* spp. other than *Salmonella Typhi* if the food employee's stools are negative for these bacteria based on testing of 2 consecutive stool specimen cultures that are taken…"

[Statutory Authority: RCW 43.20.050, 43.20.145 and 69.80.060. 04-22-111, § 246-215-251, filed 11/3/04, effective 5/2/05.]

WAC 246-215-260 Procedure when disease transmission is suspected. (1) When a possible foodborne illness incident is reported to any food employee, the person in charge of the food establishment must:

(a) Immediately report the incident to the regulatory authority; and

(b) Remove from sale and refrigerate any suspect foods until released by the regulatory authority.

(2) When the regulatory authority suspects that a food establishment, or its employees, might be a source of a foodborne illness, the regulatory authority must take appropriate action to control the transmission of disease. This action may include any or all of the following:

(a) Secure records that might enable identification of persons potentially exposed to the disease, and/or require additional assistance in locating such persons;

(b) Secure the illness history of each suspected employee;

(c) Exclude any suspected employee(s) from working in food establishments until, in the opinion of the regulatory authority, there is no further risk of disease transmission;

(d) Suspend the permit of the food establishment until, in the opinion of the regulatory authority, there is no further risk of disease transmission;

(e) Restrict the work activities of any suspected employee;

(f) Require medical and laboratory examinations of any food employee and of his/her body discharges;

(g) Obtain any suspect food for laboratory examination;

(h) Require the destruction of, or placement of a hold order on, all suspect food; and

(i) Limit, substitute, or restrict menu items or food handling practices that may be associated with causing illness.

(3) The provisions of chapter 246-100 WAC, Communicable and certain other diseases, apply.

[Statutory Authority: RCW 43.20.050, 43.20.145 and 69.80.060. 04-22-111, § 246-215-260, filed 11/3/04, effective 5/2/05. Statutory Authority: RCW 43.20.050. 92-08-112 (Order 261B), § 246-215-260, filed 4/1/92, effective 5/2/92.]

WAC 246-215-280 Interpretation. (1) The regulatory authority must enforce these regulations in accordance with the interpretations contained in the 2001 edition of the *Food Code* of the United States Public Health Service, Food and Drug Administration, where applicable.

(2) If a section of these regulations conflicts with the *Food Code*, these regulations apply.

(3) When a regulatory authority adopts rules with more stringent provisions than those contained in these regulations, the more stringent rules apply.

(4) Designations in the *Food Code* of critical, noncritical, and swing violations do not apply.

[Statutory Authority: RCW 43.20.050, 43.20.145 and 69.80.060. 04-22-111, § 246-215-280, filed 11/3/04, effective 5/2/05. Statutory Authority: RCW 43.20.050. 92-08-112 (Order 261B), § 246-215-280, filed 4/1/92, effective 5/2/92.]

WAC 246-215-290 Separability clause. If any section, paragraph, clause, or phrase of these rules and regulations be declared unconstitutional or invalid for any reason, the remaining rules and regulations will not be affected.

[Statutory Authority: RCW 43.20.050, 43.20.145 and 69.80.060. 04-22-111, § 246-215-290, filed 11/3/04, effective 5/2/05. Statutory Authority: RCW 43.20.050. 92-08-112 (Order 261B), § 246-215-290, filed 4/1/92, effective 5/2/92.]

WAC 246-215-300 Penalty clause. Any person violating, refusing, or neglecting to comply with these regulations:

(1) Will, upon conviction, be guilty of a misdemeanor under RCW 70.05.120; or

(2) May be subject to a civil penalty under local health department/district rules and regulations.

[Statutory Authority: RCW 43.20.050, 43.20.145 and 69.80.060. 04-22-111, § 246-215-300, filed 11/3/04, effective 5/2/05. Statutory Authority: RCW 43.20.050. 92-08-112 (Order 261B), § 246-215-300, filed 4/1/92, effective 5/2/92.]

WAC 246-215-311 Effective date. The revised provisions of this chapter, as adopted by the state board of health on September 8, 2004, will become effective beginning May 2, 2005.

[Statutory Authority: RCW 43.20.050, 43.20.145 and 69.80.060. 04-22-111, § 246-215-311, filed 11/3/04, effective 5/2/05.]

Chapter 246-217 WAC
FOOD WORKER CARDS

WAC

246-217-005 Purpose and authority.
246-217-010 Definitions.
246-217-015 Applicability.
246-217-025 Issuance of food worker cards—Fees.
246-217-035 Validity and form of food worker cards.
246-217-045 Limited duty food worker cards.
246-217-060 Revocation of food worker card.
246-217-070 Right of appeal.

DISPOSITION OF SECTIONS FORMERLY CODIFIED IN THIS CHAPTER

246-217-001 Objective. [Statutory Authority: RCW 43.20.050. 91-02-051 (Order 124B), recodified as § 246-217-001, filed 12/27/90, effective 1/31/91; Regulation.87.001, effective 3/11/60.] Repealed by 99-13-019, filed 6/7/99, effective 7/8/99. Statutory Authority: RCW 43.20.050.

246-217-002 Legal authority of the state board of health. [Statutory Authority: RCW 43.20.050. 91-02-051 (Order 124B), recodified as § 246-217-002, filed 12/27/90, effective 1/31/91; Regulation.86.999, effective 3/11/60.] Repealed by 99-13-019, filed 6/7/99, effective 7/8/99. Statutory Authority: RCW 43.20.050.

246-217-011 Definitions. [Statutory Authority: RCW 43.20.050. 91-02-051 (Order 124B), recodified as § 246-217-011, filed 12/27/90, effective 1/31/91; Regulation.86.001, effective 3/11/60.] Repealed by 99-13-019, filed 6/7/99, effective 7/8/99. Statutory Authority: RCW 43.20.050.

246-217-020 Communicable disease. [Statutory Authority: RCW 43.20.050. 91-02-051 (Order 124B), recodified as § 246-217-020, filed 12/27/90, effective 1/31/91; Regulation.87.020, effective 3/11/60.] Repealed by 99-13-019, filed 6/7/99, effective 7/8/99. Statutory Authority: RCW 43.20.050.

246-217-030 Form of permits—Fees. [Statutory Authority: RCW 43.20.050 and chapter 69.03 RCW. 92-14-093 (Order 286B), § 246-217-030, filed 6/30/92, effective 7/31/92. Statutory Authority: RCW 43.20.050. 91-02-051 (Order 124B), recodified as § 246-217-030, filed 12/27/90, effective 1/31/91. Statutory Authority: Chapter 69.06 RCW. 87-19-069 (Order 346), § 248-86-010, filed 9/16/87; Regulation.86.010, effective 3/11/60.] Repealed by 99-13-019, filed 6/7/99, effective 7/8/99. Statutory Authority: RCW 43.20.050.

246-217-040 Requirements for permits. [Statutory Authority: RCW 43.20.050. 91-02-051 (Order 124B), recodified as § 246-217-040, filed 12/27/90, effective 1/31/91; Regulation.86.020, effective 3/11/60.] Repealed by 99-13-019, filed 6/7/99, effective 7/8/99. Statutory Authority: RCW 43.20.050.

246-217-050 Examination may be required. [Statutory Authority: RCW 43.20.050. 91-02-051 (Order 124B), recodified as § 246-217-050, filed 12/27/90, effective 1/31/91; Regulation.86.040, effective 3/11/60.] Repealed by 99-13-019, filed 6/7/99, effective 7/8/99. Statutory Authority: RCW 43.20.050.

WAC 246-217-005 Purpose and authority. The purpose of chapter 246-217 WAC is to establish state board of health standards for the issuance of food worker cards (food worker permits) under chapter 69.06 RCW and RCW 43.20.050. To promote and protect the health, safety and well-being of the public and prevent the spread of disease by food, all food service workers in the state shall demonstrate through the process of examination that they possess an adequate knowledge of the principles and practices involved in the safe preparation, storage, and service of foods.

[Statutory Authority: RCW 43.20.050. 99-13-019, § 246-217-005, filed 6/7/99, effective 7/8/99.]

WAC 246-217-010 Definitions. As used in this chapter of the rules and regulations, the following definitions apply:

(1) "Additional food safety training" means completion of a comprehensive training program on food safety of at least four hours in length. Training may include topics such as: Proper cooking, hot-holding, cold-holding and cooling of potentially hazardous foods; cross-contamination prevention; HACCP and/or proper hand washing techniques. Approval of training programs shall be obtained from jurisdictional health departments or the department by the training provider. Approval of training programs must be obtained in advance.

(2) "Applicant" means an individual applying to obtain an initial or renewal food worker card.

(3) "Department" means the Washington state department of health.

(4) "Food service establishment" means:

(a) A place, location, operation, site, or facility where food is manufactured, prepared, processed, packaged, dispensed, distributed, sold, served, or offered to the consumer regardless of whether or not compensation for food occurs, including but not limited to:

(i) Restaurants, snack bars, cafeterias, taverns, bars;

(ii) Retail food stores, supermarkets, retail meat markets, retail fish markets, retail bakeries, delicatessens;

(iii) Institutional operations licensed by the department, the state department of social and health services or local health officer, such as schools, hospitals, jails, prisons, nursing homes, boarding homes, and child care facilities;

(iv) Central preparation sites, including caterers;

(v) Satellite servicing locations;

(vi) Temporary food service establishments or mobile food units;

(vii) Bed and breakfast operations;

(viii) Remote feeding sites;

(ix) Adult family homes; and

(x) Vending machines dispensing potentially hazardous foods.

(b) This term does not include:

(i) Private homes where food is prepared or served for consumption by household members and/or their guests;

(ii) Establishments offering only commercially prepackaged nonpotentially hazardous foods;

(iii) Commercial food processing establishments, licensed and regulated by the USDA, FDA, or WSDA; and

(iv) Farmers exempt from licensure under RCW 36.71.-090.

(5) "Food service worker" means an individual who works (or intends to work) with or without pay in a food service establishment and handles unwrapped or unpackaged food or who may contribute to the transmission of infectious diseases through the nature of his/her contact with food products and/or equipment and facilities. This does not include persons who simply assist residents or patients in institutional facilities with meals, or students in K-12 schools who periodically assist with school meal service.

(6) "Food worker card" means a food and beverage service workers' permit as required under chapter 69.06 RCW.

(7) "Health officer" means the county, city-county, or district health officer of a jurisdictional health department, or his/her authorized representative, or the representative of the department.

(8) "Jurisdictional health department" refers to one of the following:

(a) Local health district as defined in chapter 70.46 RCW.

(b) City-county health department as defined in chapter 70.08 RCW.

(c) County health department as defined in chapter 70.05 RCW.

(9) "Person" means any individual, partnership, corporation, association, or other legal entity or agency of state, county, or municipal government, or agency of the federal government which is subject to the jurisdiction of the state.

(10) "Secretary" means the secretary of the state department of health.

[Statutory Authority: RCW 69.06.010. 04-16-100, § 246-217-010, filed 8/3/04, effective 9/3/04. Statutory Authority: RCW 43.20.050. 99-13-019, § 246-217-010, filed 6/7/99, effective 7/8/99; 91-02-051 (Order 124B), recodified as § 246-217-010, filed 12/27/90, effective 1/31/91; Regulation.87.002, effective 3/11/60.]

WAC 246-217-015 Applicability. (1) All food service workers must obtain a food worker card within fourteen calendar days from the beginning of employment at a food service establishment, except as provided in subsection (4) of this section.

(2) In the case of temporary food service establishments, at a minimum the operator or person in charge each shift or during hours of operation must have a valid food worker card obtained prior to the event.

(3) Employers at any food service establishment (permanent or temporary) must provide information or training regarding pertinent safe food handling practices to food service workers prior to beginning food handling duties if the worker does not hold a valid food worker card. Documentation that the information or training has been provided to the individual must be kept on file by the employer and be available for inspection by the health officer at all times.

(4) A food service worker in an adult family home, as defined in RCW 70.128.010, is exempt from possessing a food worker card, if the worker:

(a) Began working in an adult family home after June 30, 2005, has successfully completed basic or modified-basic caregiver training, and has documentation of receiving information or training regarding safe food handling practices from his or her employer prior to providing food handling or service for clients of the adult family home; or

(b) Held a valid food worker card prior to June 30, 2005, and obtained 0.5 hours of continuing education in food handling safety per year since June 30, 2005.

[Statutory Authority: RCW 43.20.050. 06-05-008, § 246-217-015, filed 2/2/06, effective 3/5/06; 99-13-019, § 246-217-015, filed 6/7/99, effective 7/8/99.]

WAC 246-217-025 Issuance of food worker cards—Fees. (1) In order to qualify for issuance of an initial or renewal food worker card, an applicant must demonstrate his/her knowledge of safe food handling practices by satisfactorily completing an examination conducted by the local health officer or designee.

(2) Each applicant for a food worker card must pay a fee in the amount of ten dollars. The fee shall be used by the jurisdictional health department or designee to defray the costs of food worker training and education, administration of the program, and testing of applicants. Photographic identification may be required at the time of application.

(3) The local health officer or designee must furnish to the applicant a copy of the latest edition of the "*Food and Beverage Service Workers' Manual*" or similar publication, as prepared or approved by the department.

(4) Effective January 1, 2000, prior to conducting the examination of the applicant(s), the health officer (or designee) must provide at least thirty minutes of instruction, including both audio and visual presentations. Instruction content shall include topics related to safe food preparation, storage and service. At a minimum, topics must include: Food borne illness overview; basic bacteriology as it relates to food borne illness; proper cooking, hot holding, cold holding and cooling of potentially hazardous foods; cross-contamination prevention; and proper handwashing techniques. Instruction content must also include the topic of food allergy awareness that is presented and/or distributed to each applicant.

(5) The food worker card examination will be uniform statewide and will be prepared by and/or approved by the department; except that jurisdictional health departments may include additional questions to address local health concerns. The examination will cover topics identified in subsection (4) of this section, except food allergy awareness, as required instruction topics. An exam must be approved by the department prior to its use. To pass the examination the applicant must answer at least eighty percent of the questions correctly.

(6) Upon payment of the required fee and the applicant's satisfactory completion of the examination, the applicant will receive the food worker card.

(7) A copy of the card or the applicable information must be kept on file at the jurisdictional health department.

(8) Copies of food worker cards for all employed food service workers must be kept on file by the employer or kept by the employee on his or her person and open for inspection at all times by authorized public health officials.

(9) All food worker cards must be issued and signed by the local health officer. The local health officer may contract with persons to provide the required training or testing within his/her jurisdiction. The contracts must include test security provisions so that test questions, scoring keys, and other examination data are exempt from public disclosure to the same extent as records maintained by state or local government agencies.

(10) The health officer or designee must make test accommodations in accordance with the Americans with Disabilities Act for those requesting such accommodations.

[Statutory Authority: RCW 43.20.050. 06-05-008, § 246-217-025, filed 2/2/06, effective 3/5/06. Statutory Authority: Chapter 69.06 RCW. 02-22-079, § 246-217-025, filed 11/5/02, effective 1/1/03. Statutory Authority: RCW 43.20.050. 99-13-019, § 246-217-025, filed 6/7/99, effective 7/8/99.]

WAC 246-217-035 Validity and form of food worker cards. (1) All initial cards are valid for two years from the date of issuance.

(2) Effective July 1, 1999, renewal cards are valid for three years from the date of issuance; except: An applicant may be granted a renewal card valid for five years from the date of issuance if the applicant documents that he/she has attended "additional food safety training" within the past two years.

(3) Any legally issued food worker card shall be valid throughout Washington state.

(4) Food service workers may apply for a renewal of a food worker card up to sixty days before the expiration date on their current valid card. Proof of a valid card must be shown at the time of renewal application.

(5) The card shall be approximately three inches by five inches in size and contain the following information:

(a) The identification of the card as a Washington state food worker card or "limited duty card," as applicable;

(b) The identity of the jurisdictional health department issuing the card;

(c) Printed (or typed written) name and signature of the food service worker;

(d) Card expiration date;

(e) Signature of the health officer; and

(f) Any other identifier or other information deemed necessary by the health officer.

[Statutory Authority: RCW 43.20.050. 99-13-019, § 246-217-035, filed 6/7/99, effective 7/8/99.]

WAC 246-217-045 Limited duty food worker cards. The local health officer may issue a limited duty card when necessary to reasonably accommodate a person with a disability.

(1) A person applying to obtain a limited duty card shall communicate to the local health officer which low public health risk activity(ies) (e.g., dishwashing, bussing tables, filling condiment containers, etc.) he or she will be performing.

(2) The health officer may require the applicant to attend the food safety training associated with the issuance of food worker cards. No written examination is required for the issuance of limited duty cards.

(3) The local health officer shall list the approved activity(ies) on the food worker card.

(4) The fee and length of validity of limited duty cards is the same as all other food worker cards.

(5) The employer should ensure that the individual is provided with information to safely perform the activity(ies) listed on the card.

[Statutory Authority: RCW 43.20.050. 99-13-019, § 246-217-045, filed 6/7/99, effective 7/8/99.]

WAC 246-217-060 Revocation of food worker card. The food worker card may be revoked by the local health officer, or by the secretary, upon evidence indicating repeated or continuing violations of accepted procedures and practices in the preparation, service, or storage of food offered for public consumption, or upon demonstration of the presence of a communicable disease in the infectious state, or an infectious condition of potential hazard to the public or to the persons' co-workers, or for falsification of information required for issuance of the card. Any food service worker who has had his/her card revoked shall be ineligible for issuance of another card by any local health officer in the state until the conditions for revocation are appropriately resolved.

[Statutory Authority: RCW 43.20.050. 99-13-019, § 246-217-060, filed 6/7/99, effective 7/8/99; 91-02-051 (Order 124B), recodified as § 246-217-060, filed 12/27/90, effective 1/31/91; Regulation.86.050, effective 3/11/60.]

WAC 246-217-070 Right of appeal. Any food service worker whose food worker card has been revoked by a local health officer, or the secretary, may appeal to the local board of health, or the department's office of professional standards consistent with chapter 246-10 WAC in the event such revocation is by the secretary, for review of the findings. The appeal must be in writing and must be filed with the appropriate board or office within ten days of revocation of the card. While the appeal is pending, the revocation of the card shall be stayed until such time as the appropriate board or office has reviewed the findings and entered its decision.

[Statutory Authority: RCW 43.20.050. 99-13-019, § 246-217-070, filed 6/7/99, effective 7/8/99; 91-02-051 (Order 124B), recodified as § 246-217-070, filed 12/27/90, effective 1/31/91; Regulation.86.060, effective 3/11/60.]

Chapter 246-220 WAC

RADIATION PROTECTION—GENERAL PROVISIONS

WAC

246-220-001	Authority.
246-220-002	Purpose.
246-220-003	Scope.
246-220-007	Statement of philosophy.
246-220-010	Definitions.
246-220-020	Records.
246-220-030	Inspections.
246-220-040	Tests and surveys.
246-220-050	Exemptions.
246-220-060	Violations.
246-220-070	Impounding.
246-220-080	Prohibited uses.
246-220-090	Communications.
246-220-100	Additional requirements.

DISPOSITION OF SECTIONS FORMERLY CODIFIED IN THIS CHAPTER

246-220-110 Appendix A—Determination of A_1 and A_2 values. [Statutory Authority: RCW 70.98.050. 95-01-108, § 246-220-110, filed 12/21/94, effective 1/21/95. Statutory Authority: RCW 43.70.040. 91-02-049 (Order 121), recodified as § 246-220-110, filed 12/27/90, effective 1/31/91. Statutory Authority: RCW 70.98.080. 87-01-031 (Order 2450), § 402-12-200, filed 12/11/86; Order 1095, § 402-12-200, filed 2/6/76.] Repealed by 99-15-105, filed 7/21/99, effective 8/21/99. Statutory Authority: RCW 70.98.050.

246-220-120 Appendix B—Information on transportation special form licensed material. [Statutory Authority: RCW 70.98.050. 94-01-073, § 246-220-120, filed 12/9/93, effective 1/9/94. Statutory Authority: RCW 43.70.040. 91-02-049 (Order 121), recodified as § 246-220-120, filed 12/27/90, effective 1/31/91. Statutory Authority: RCW 70.98.080. 87-01-031 (Order 2450), § 402-12-210, filed 12/11/86; Order 1095, § 402-12-210, filed 2/6/76.] Repealed by 99-15-105, filed 7/21/99, effective 8/21/99. Statutory Authority: RCW 70.98.050.

246-220-130 Appendix C—The international system of units (SI). [Statutory Authority: RCW 70.98.050. 94-01-073, § 246-220-130, filed 12/9/93, effective 1/9/94. Statutory Authority: RCW 70.98.050 and 70.98.080. 91-15-112 (Order 184), § 246-220-130, filed 7/24/91, effective 8/24/91. Statutory Authority: RCW 43.70.040. 91-02-049 (Order 121), recodified as § 246-220-130, filed 12/27/90, effective 1/31/91. Statutory Authority: RCW 70.98.050. 81-01-011 (Order 1570), § 402-12-250, filed 12/8/80.] Repealed by 97-20-101, filed 9/29/97, effective 10/30/97. Statutory Authority: RCW 43.70.040.

WAC 246-220-001 Authority. Rules and regulations set forth herein are adopted pursuant to the provisions of chapter 70.98 RCW.

[Statutory Authority: RCW 43.70.040. 91-02-049 (Order 121), recodified as § 246-220-001, filed 12/27/90, effective 1/31/91; Order 1095, § 402-12-010, filed 2/6/76; Order 1, § 402-12-010, filed 1/8/69; Rules (part), filed 10/26/66.]

WAC 246-220-002 Purpose. It is the purpose of these regulations to state such requirements as shall be applied to the use of all ionizing radiation, radiation machines, and radioactive materials to ensure the maximum protection of the public health and the maximum safety to all persons at, or in the vicinity of, the place of use, storage, or disposal thereof. These regulations are intended to be consistent with the best use of radiation machines and radioactive materials.

[Statutory Authority: RCW 70.98.050. 94-01-073, § 246-220-002, filed 12/9/93, effective 1/9/94. Statutory Authority: RCW 43.70.040. 91-02-049 (Order 121), recodified as § 246-220-002, filed 12/27/90, effective 1/31/91. Statutory Authority: RCW 70.98.080. 87-01-031 (Order 2450), § 402-12-030, filed 12/11/86; Order 1095, § 402-12-030, filed 2/6/76; Order 1, § 402-12-030, filed 1/8/69; Rules (part), filed 10/26/66.]

WAC 246-220-003 Scope. Except as otherwise specifically provided, these regulations apply to all persons who receive, possess, use, transfer, own or acquire any source of radiation, provided, however, that nothing in these regulations shall apply to any person to the extent such person is subject to regulation by the U.S. Nuclear Regulatory Commission.*

Note: *Attention is directed to the fact that regulation by the state of source material, by-product material, and special nuclear material in quantities not sufficient to form a critical mass is subject to the provisions of the agreement between the state and the U.S. Nuclear Regulatory Commission and to Part 150 of the commission's regulations (10 CFR Part 150).

[Statutory Authority: RCW 43.70.040. 91-02-049 (Order 121), recodified as § 246-220-003, filed 12/27/90, effective 1/31/91; Order 1095, § 402-12-040, filed 2/6/76; Order 1, § 402-12-040, filed 1/8/69; Rules (part), filed 10/26/66.]

WAC 246-220-007 Statement of philosophy. In accordance with the recommendations of the Environmental Protection Agency, formerly the Federal Radiation Council, approved by the president of the United States of America, persons engaged in activities under licenses issued by the Washington state department of health pursuant to the Atomic Energy Act of 1954, as amended, shall, in addition to complying with the requirements set forth in chapter 246-221 WAC, make every reasonable effort to maintain radiation exposures, and releases of radioactive materials in effluents to unrestricted areas, as low as is reasonably achievable. Such persons should make particular efforts to keep the radiation exposure of an embryo or fetus as low as is reasonably achievable during the entire gestation period as recommended by the National Council on Radiation Protection and Measurements. The term "as low as is reasonably achievable" means making every reasonable effort to maintain exposures to radiation as far below the dose limits in these regulations as is practical, consistent with the purpose for which the licensed or registered activity is undertaken, taking into account the state of technology, the economics of improvements in relation to the state of technology, the economics of improvements in relation to benefits to the public health and safety, and other societal and socioeconomic considerations, and in relation to the utilization of nuclear energy, ionizing radiation, and radioactive materials in the public interest.

[Statutory Authority: RCW 70.98.050. 00-08-013, § 246-220-007, filed 3/24/00, effective 4/24/00; 94-01-073, § 246-220-007, filed 12/9/93, effective 1/9/94. Statutory Authority: RCW 70.98.050 and 70.98.080. 91-15-112 (Order 184), § 246-220-007, filed 7/24/91, effective 8/24/91. Statutory Authority: RCW 43.70.040. 91-02-049 (Order 121), recodified as § 246-220-007, filed 12/27/90, effective 1/31/91. Statutory Authority: RCW 70.98.050. 81-01-011 (Order 1570), § 402-10-010, filed 12/8/80; Order 1095, § 402-10-010, filed 2/6/76.]

WAC 246-220-010 Definitions. As used in these regulations, these terms have the definitions set forth below. Additional definitions used only in a certain part will be found in that part.

(1) "Absorbed dose" means the energy imparted by ionizing radiation per unit mass of irradiated material. The units of absorbed dose are the gray (Gy) and the rad.

(2) "Accelerator produced material" means any material made radioactive by exposing it in a particle accelerator.

(3) "Act" means Nuclear energy and radiation, chapter 70.98 RCW.

(4) "Activity" means the rate of disintegration or transformation or decay of radioactive material. The units of activity are the becquerel (Bq) and the curie (Ci).

(5) "Adult" means an individual eighteen or more years of age.

(6) "Agreement state" means any state with which the United States Nuclear Regulatory Commission has entered into an effective agreement under section 274 b. of the Atomic Energy Act of 1954, as amended (73 Stat. 689).

(7) "Airborne radioactive material" means any radioactive material dispersed in the air in the form of particulates, dusts, fumes, mists, vapors, or gases.

(8) "Airborne radioactivity area" means a room, enclosure, or operating area in which airborne radioactive material exists in concentrations (a) in excess of the derived air concentration (DAC) specified in WAC 246-221-290, Appendix A, or (b) to the degree that an individual present in the area without respiratory protective equipment could exceed, during the hours an individual is present in a week, an intake of 0.6 percent of the annual limit on intake (ALI) or twelve DAC-hours.

(9) "Air purifying respirator" means a respirator with an air-purifying filter, cartridge, or canister that removes specific air contaminants by passing ambient air through the air-purifying element.

(10) "Alert" means events may occur, are in progress, or have occurred that could lead to a release of radioactive material but that the release is not expected to require a response by offsite response organizations to protect persons offsite.

(11) "Annual limit on intake" (ALI) means the derived limit for the amount of radioactive material taken into the body of an adult worker by inhalation or ingestion in a year. ALI is the smaller value of intake of a given radionuclide in a year by the reference man that would result in a committed effective dose equivalent of 0.05 Sv (5 rem) or a committed dose equivalent of 0.5 Sv (50 rem) to any individual organ or tissue. ALI values for intake by ingestion and by inhalation of selected radionuclides are given in WAC 246-221-290.

(12) "Assigned protection factor" (APF) means the expected workplace level of respiratory protection that would be provided by a properly functioning respirator or a class of respirators to properly fitted and trained users. Operationally, the inhaled concentration can be estimated by dividing the ambient airborne concentration by the APF.

(13) "Atmosphere-supplying respirator" means a respirator that supplies the respirator user with breathing air from a source independent of the ambient atmosphere, and includes supplied-air respirators (SARs) and self-contained breathing apparatus (SCBA) units.

(14) "Background radiation" means radiation from cosmic sources; naturally occurring radioactive materials, including radon, except as a decay product of source or special nuclear material, and including global fallout as it exists in the environment from the testing of nuclear explosive devices or from past nuclear accidents such as Chernobyl that contribute to background radiation and are not under the control of the licensee. "Background radiation" does not include sources of radiation from radioactive materials regulated by the department.

(15) "Becquerel" (Bq) means the SI unit of activity. One becquerel is equal to 1 disintegration or transformation per second (s^{-1}).

(16) "Bioassay" means the determination of kinds, quantities or concentrations, and, in some cases, the locations of radioactive material in the human body, whether by direct measurement, in vivo counting, or by analysis and evaluation of materials excreted or removed from the human body. For purposes of these regulations, "radiobioassay" is an equivalent term.

(17) "Byproduct material" means: (a) Any radioactive material (except special nuclear material) yielded in or made radioactive by exposure to the radiation incident to the process of producing or utilizing special nuclear material, and (b) the tailings or wastes produced by the extraction or concentration of uranium or thorium from any ore processed primarily for its source material content, including discrete surface wastes resulting from uranium or thorium solution extraction processes. Underground ore bodies depleted by these solution extraction operations do not constitute "byproduct material" within this definition.

(18) "Calendar quarter" means at least twelve but no more than fourteen consecutive weeks. The first calendar quarter of each year begins in January and subsequent calendar quarters shall be arranged so that no day is included in more than one calendar quarter and no day in any one year is omitted from inclusion within a calendar quarter. A licensee or registrant may not change the method of determining calendar quarters for purposes of these regulations.

(19) "Calibration" means the determination of (a) the response or reading of an instrument relative to a series of known radiation values over the range of the instrument, or (b) the strength of a source of radiation relative to a standard.

(20) "CFR" means Code of Federal Regulations.

(21) "Class" means a classification scheme for inhaled material according to its rate of clearance from the pulmonary region of the lung. Materials are classified as D, W, or Y, which applies to a range of clearance half-times: For Class D, Days, of less than ten days, for Class W, Weeks, from ten to one hundred days, and for Class Y, Years, of greater than one hundred days. For purposes of these regulations, "lung class" and "inhalation class" are equivalent terms. For "class of waste" see WAC 246-249-040.

(22) "Collective dose" means the sum of the individual doses received in a given period of time by a specified population from exposure to a specified source of radiation.

(23) "Committed dose equivalent" ($H_{T,50}$) means the dose equivalent to organs or tissues of reference (T) that will be received from an intake of radioactive material by an individual during the fifty-year period following the intake.

(24) "Committed effective dose equivalent" ($H_{E,50}$) is the sum of the products of the weighting factors applicable to each of the body organs or tissues that are irradiated and the committed dose equivalent to each of these organs or tissues ($H_{E,50} = \&S_{gr}; w_{T,}H_{T,50}$).

(25) "Constraint" or dose constraint means a value above which specified licensee actions are required.

(26) "Controlled area." See "Restricted area."

(27) "Curie" means a unit of quantity of radioactivity. One curie (Ci) is that quantity of radioactive material which decays at the rate of 3.7×10^{10} transformations per second (tps).

(28) "Declared pregnant woman" means a woman who has voluntarily informed the licensee or registrant, in writing, of her pregnancy, and the estimated date of conception. The declaration remains in effect until the declared pregnant woman withdraws the declaration in writing or is no longer pregnant.

(29) "Deep dose equivalent" (H_d), which applies to external whole body exposure, means the dose equivalent at a tissue depth of 1 centimeter (1000 mg/cm^2).

(30) "Demand respirator" means an atmosphere-supplying respirator that admits breathing air to the facepiece only

when a negative pressure is created inside the facepiece by inhalation.

(31) "Department" means the Washington state department of health, office of radiation protection, which has been designated as the state radiation control agency under chapter 70.98 RCW.

(32) "Depleted uranium" means the source material uranium in which the isotope Uranium-235 is less than 0.711 percent by weight of the total uranium present. Depleted uranium does not include special nuclear material.

(33) "Derived air concentration" (DAC) means the concentration of a given radionuclide in air which, if breathed by the reference man for a working year of two thousand hours under conditions of light work, results in an intake of one ALI. For purposes of these regulations, the condition of light work is an inhalation rate of 1.2 cubic meters of air per hour for two thousand hours in a year. DAC values are given in WAC 246-221-290.

(34) "Derived air concentration-hour" (DAC-hour) means the product of the concentration of radioactive material in air, expressed as a fraction or multiple of the derived air concentration for each radionuclide, and the time of exposure to that radionuclide, in hours. A licensee or registrant may take two thousand DAC-hours to represent one ALI, equivalent to a committed effective dose equivalent of 0.05 Sv (5 rem).

(35) "Disposable respirator" means a respirator for which maintenance is not intended and that is designed to be discarded after excessive breathing resistance, sorbent exhaustion, physical damage, or end-of-service-life renders it unsuitable for use. Examples of this type of respirator are a disposable half-mask respirator or a disposable escape-only self-contained breathing apparatus (SCBA).

(36) "Dose" is a generic term that means absorbed dose, dose equivalent, effective dose equivalent, committed dose equivalent, committed effective dose equivalent, total organ dose equivalent, or total effective dose equivalent. For purposes of these rules, "radiation dose" is an equivalent term.

(37) "Dose commitment" means the total radiation dose to a part of the body that will result from retention in the body of radioactive material. For purposes of estimating the dose commitment, it is assumed that from the time of intake the period of exposure to retained material will not exceed fifty years.

(38) "Dose equivalent" (H_T) means the product of the absorbed dose in tissue, quality factor, and all other necessary modifying factors at the location of interest. The units of dose equivalent are the sievert (Sv) and rem.

(39) "Dose limits" means the permissible upper bounds of radiation doses established in accordance with these regulations. For purposes of these regulations, "limits" is an equivalent term.

(40) "Dosimetry processor" means a person that processes and evaluates individual monitoring devices in order to determine the radiation dose delivered to the monitoring devices.

(41) "dpm" means disintegrations per minute. See also "curie."

(42) "Effective dose equivalent" (H_E) means the sum of the products of the dose equivalent to each organ or tissue (H_T) and the weighting factor (w_T) applicable to each of the body organs or tissues that are irradiated ($H_E = \&S_{gr}; w_T H_T$).

(43) "Embryo/fetus" means the developing human organism from conception until the time of birth.

(44) "Entrance or access point" means any opening through which an individual or extremity of an individual could gain access to radiation areas or to licensed radioactive materials. This includes entry or exit portals of sufficient size to permit human entry, without respect to their intended use.

(45) "Exposure" means (a) being exposed to ionizing radiation or to radioactive material, or (b) the quotient of ΔQ by Δm where "ΔQ" is the absolute value of the total charge of the ions of one sign produced in air when all the electrons (negatrons and positrons) liberated by photons in a volume element of air having mass "Δm" are completely stopped in air. The special unit of exposure is the roentgen (R) and the SI equivalent is the coulomb per kilogram. One roentgen is equal to 2.58×10^{-4} coulomb per kilogram of air.

(46) "Exposure rate" means the exposure per unit of time, such as roentgen per minute and milliroentgen per hour.

(47) "External dose" means that portion of the dose equivalent received from any source of radiation outside the body.

(48) "Extremity" means hand, elbow, arm below the elbow, foot, knee, and leg below the knee.

(49) "Filtering facepiece" (dust mask) means a negative pressure particulate respirator with a filter as an integral part of the facepiece or with the entire facepiece composed of the filtering medium, not equipped with elastomeric sealing surfaces and adjustable straps.

(50) "Fit factor" means a quantitative estimate of the fit of a particular respirator to a specific individual, and typically estimates the ratio of the concentration of a substance in ambient air to its concentration inside the respirator when worn.

(51) "Fit test" means the use of a protocol to qualitatively or quantitatively evaluate the fit of a respirator on an individual.

(52) "Former United States Atomic Energy Commission (AEC) or United States Nuclear Regulatory Commission (NRC) licensed facilities" means nuclear reactors, nuclear fuel reprocessing plants, uranium enrichment plants, or critical mass experimental facilities where AEC or NRC licenses have been terminated.

(53) "Generally applicable environmental radiation standards" means standards issued by the United States Environmental Protection Agency (EPA) under the authority of the Atomic Energy Act of 1954, as amended, that impose limits on radiation exposures or levels, or concentrations or quantities of radioactive material, in the general environment outside the boundaries of locations under the control of persons possessing or using radioactive material.

(54) "Gray" (Gy) means the SI unit of absorbed dose. One gray is equal to an absorbed dose of 1 joule/kilogram (100 rad).

(55) "Healing arts" means the disciplines of medicine, dentistry, osteopathy, chiropractic, podiatry, and veterinary medicine.

(56) "Helmet" means a rigid respiratory inlet covering that also provides head protection against impact and penetration.

(57) "High radiation area" means any area, accessible to individuals, in which radiation levels from radiation sources external to the body could result in an individual receiving a dose equivalent in excess of 1 mSv (0.1 rem) in one hour at 30 centimeters from any source of radiation or 30 centimeters from any surface that the radiation penetrates. For purposes of these regulations, rooms or areas in which diagnostic X-ray systems are used for healing arts purposes are not considered high radiation areas.

(58) "Hood" means a respiratory inlet covering that completely covers the head and neck and may also cover portions of the shoulders and torso.

(59) "Human use" means the intentional internal or external administration of radiation or radioactive material to human beings.

(60) "Immediate" or "immediately" means as soon as possible but no later than four hours after the initiating condition.

(61) "IND" means investigatory new drug for which an exemption has been claimed under the United States Food, Drug and Cosmetic Act (Title 21 CFR).

(62) "Individual" means any human being.

(63) "Individual monitoring" means the assessment of:

(a) Dose equivalent (i) by the use of individual monitoring devices or (ii) by the use of survey data; or

(b) Committed effective dose equivalent (i) by bioassay or (ii) by determination of the time-weighted air concentrations to which an individual has been exposed, that is, DAC-hours.

(64) "Individual monitoring devices" (individual monitoring equipment) means devices designed to be worn by a single individual for the assessment of dose equivalent e.g., as film badges, thermoluminescent dosimeters (TLDs), pocket ionization chambers, and personal ("lapel") air sampling devices.

(65) "Inspection" means an official examination or observation by the department including but not limited to, tests, surveys, and monitoring to determine compliance with rules, orders, requirements and conditions of the department.

(66) "Interlock" means a device arranged or connected so that the occurrence of an event or condition is required before a second event or condition can occur or continue to occur.

(67) "Internal dose" means that portion of the dose equivalent received from radioactive material taken into the body.

(68) "Irretrievable source" means any sealed source containing licensed material which is pulled off or not connected to the wireline downhole and for which all reasonable effort at recovery, as determined by the department, has been expended.

(69) "Lens dose equivalent" (LDE) applies to the external exposure of the lens of the eye and is taken as the dose equivalent at a tissue depth of 0.3 centimeters (300 mg/cm^2).

(70) "License" means a license issued by the department.

(71) "Licensed material" means radioactive material received, possessed, used, transferred, or disposed under a general or specific license issued by the department.

(72) "Licensee" means any person who is licensed by the department under these rules and the act.

(73) "Licensing state" means any state with regulations equivalent to the suggested state regulations for control of radiation relating to, and an effective program for, the regulatory control of NARM and which has been granted final designation by the Conference of Radiation Control Program Directors, Inc.

(74) "Loose-fitting facepiece" means a respiratory inlet covering that is designed to form a partial seal with the face.

(75) "Lost or missing licensed material" means licensed material whose location is unknown. This definition includes licensed material that has been shipped but has not reached its planned destination and whose location cannot be readily traced in the transportation system.

(76) "Member of the public" means an individual except when the individual is receiving an occupational dose.

(77) "Minor" means an individual less than eighteen years of age.

(78) "Monitoring" means the measurement of radiation, radioactive material concentrations, surface area activities or quantities of radioactive material and the use of the results of these measurements to evaluate potential exposures and doses. For purposes of these regulations, radiation monitoring and radiation protection monitoring are equivalent terms.

(79) "NARM" means any naturally occurring or accelerator-produced radioactive material. It does not include byproduct, source, or special nuclear material. For the purpose of meeting the definition of a licensing state by the Conference of Radiation Control Program Directors, Inc. (CRCPD), NARM refers only to discrete sources of NARM. Diffuse sources of NARM are excluded from consideration by the CRCPD for Licensing State designation purposes.

(80) "Natural radioactivity" means radioactivity of naturally occurring nuclides.

(81) "NDA" means a new drug application which has been submitted to the United States Food and Drug Administration.

(82) "Negative pressure respirator" (tight-fitting) means a respirator in which the air pressure inside the facepiece is negative during inhalation with respect to the ambient air pressure outside the respirator.

(83) "Nonstochastic effect" means a health effect, the severity of which varies with the dose and for which a threshold is believed to exist. Radiation-induced cataract formation is an example of a nonstochastic effect. For purposes of these rules, a "deterministic effect" is an equivalent term.

(84) "Nuclear Regulatory Commission" (NRC) means the United States Nuclear Regulatory Commission or its duly authorized representatives.

(85) "Occupational dose" means the dose received by an individual in the course of employment in which the individual's assigned duties involve exposure to radiation or to radioactive material from licensed and unlicensed sources of radiation, whether in the possession of the licensee, registrant, or other person. Occupational dose does not include dose received: From background radiation, from any medical administration the individual has received, from exposure to individuals administered radioactive material and released under chapter 246-240 WAC, from voluntary participation in medical research programs, or as a member of the public.

(86) "Ore refineries" means all processors of a radioactive material ore.

(87) "Particle accelerator" means any machine capable of accelerating electrons, protons, deuterons, or other charged particles in a vacuum and of discharging the resultant particulate or other radiation into a medium at energies usually in excess of 1 MeV.

(88) "Permittee" means a person who has applied for, and received, a valid site use permit for use of the low-level waste disposal facility at Hanford, Washington.

(89) "Person" means any individual, corporation, partnership, firm, association, trust, estate, public or private institution, group, agency, political subdivision of this state, any other state or political subdivision or agency thereof, and any legal successor, representative, agent or agency of the foregoing, but shall not include federal government agencies.

(90) "Personal supervision" means supervision where the supervisor is physically present at the facility and in sufficient proximity that contact can be maintained and immediate assistance given as required.

(91) "Personnel monitoring equipment." See individual monitoring devices.

(92) "Pharmacist" means an individual licensed by this state to compound and dispense drugs, and poisons.

(93) "Physician" means a medical doctor or doctor of osteopathy licensed by this state to prescribe and dispense drugs in the practice of medicine.

(94) "Planned special exposure" means an infrequent exposure to radiation, separate from and in addition to the annual occupational dose limits.

(95) "Positive pressure respirator" means a respirator in which the pressure inside the respiratory inlet covering exceeds the ambient air pressure outside the respirator.

(96) "Powered air-purifying respirator" (PAPR) means an air-purifying respirator that uses a blower to force the ambient air through air-purifying elements to the inlet covering.

(97) "Practitioner" means an individual licensed by the state in the practice of a healing art (i.e., physician, dentist, podiatrist, chiropractor, etc.).

(98) "Pressure demand respirator" means a positive pressure atmosphere-supplying respirator that admits breathing air to the facepiece when the positive pressure is reduced inside the facepiece by inhalation.

(99) "Public dose" means the dose received by a member of the public from exposure to sources of radiation under the licensee's or registrant's control or to radiation or radioactive material released by the licensee. Public dose does not include occupational dose or doses received from background radiation, from any medical administration the individual has received, from exposure to individuals administered radioactive material and released under chapter 246-240 WAC, or from voluntary participation in medical research programs.

(100) "Qualified expert" means an individual who has demonstrated to the satisfaction of the department he/she has the knowledge, training, and experience to measure ionizing radiation, to evaluate safety techniques, and to advise regarding radiation protection needs. The department reserves the right to recognize the qualifications of an individual in specific areas of radiation protection.

(101) "Qualitative fit test" (QLFT) means a pass/fail fit test to assess the adequacy of respirator fit that relies on the individual's response to the test agent.

(102) "Quality factor" (Q) means the modifying factor, listed in Tables I and II, that is used to derive dose equivalent from absorbed dose.

TABLE I
QUALITY FACTORS AND ABSORBED DOSE EQUIVALENCIES

TYPE OF RADIATION	Quality Factor (Q)	Absorbed Dose Equal to A Unit Dose Equivalent[a]
X, gamma, or beta radiation and high-speed electrons	1	1
Alpha particles, multiple-charged particles, fission fragments and heavy particles of unknown charge	20	0.05
Neutrons of unknown energy	10	0.1
High-energy protons	10	0.1

[a] Absorbed dose in rad equal to 1 rem or the absorbed dose in gray equal to 1 Sv.

If it is more convenient to measure the neutron fluence rate rather than to determine the neutron dose equivalent rate in sievert per hour or rem per hour as required for Table I, then 0.01 Sv (1 rem) of neutron radiation of unknown energies may, for purposes of these regulations, be assumed to result from a total fluence of 25 million neutrons per square centimeter incident upon the body. If sufficient information exists to estimate the approximate energy distribution of the neutrons, the licensee or registrant may use the fluence rate per unit dose equivalent or the appropriate Q value from Table II to convert a measured tissue dose in gray or rad to dose equivalent in sievert or rem.

TABLE II
MEAN QUALITY FACTORS, Q, AND FLUENCE PER UNIT DOSE EQUIVALENT FOR MONOENERGETIC NEUTRONS

Neutron Energy (MeV)	Quality Factor[a] (Q)	Fluence per Unit Dose Equivalent[b] (neutrons cm^{-2} rem^{-1})	Fluence per Unit Dose Equivalent[b] (neutrons cm^{-2} Sv^{-1})
(thermal) 2.5×10^{-8}	2	980×10^6	980×10^8
1×10^{-7}	2	980×10^6	980×10^8
1×10^{-6}	2	810×10^6	810×10^8
1×10^{-5}	2	810×10^6	810×10^8
1×10^{-4}	2	840×10^6	840×10^8
1×10^{-3}	2	980×10^6	980×10^8
1×10^{-2}	2.5	1010×10^6	1010×10^8
1×10^{-1}	7.5	170×10^6	170×10^8
5×10^{-1}	11	39×10^6	39×10^8
1	11	27×10^6	27×10^8
2.5	9	29×10^6	29×10^8
5	8	23×10^6	23×10^8
7	7	24×10^6	24×10^8
10	6.5	24×10^6	24×10^8
14	7.5	17×10^6	17×10^8
20	8	16×10^6	16×10^8
40	7	14×10^6	14×10^8
60	5.5	16×10^6	16×10^8
1×10^2	4	20×10^6	20×10^8
2×10^2	3.5	19×10^6	19×10^8
3×10^2	3.5	16×10^6	16×10^8
4×10^2	3.5	14×10^6	14×10^8

[a] Value of quality factor (Q) at the point where the dose equivalent is maximum in a 30-cm diameter cylinder tissue-equivalent phantom.

[b] Monoenergetic neutrons incident normally on a 30-cm diameter cylinder tissue-equivalent phantom.

(103) "Quantitative fit test" (QNFT) means an assessment of the adequacy of respirator fit by numerically measuring the amount of leakage into the respirator.

(104) "Quarter" means a period of time equal to one-fourth of the year observed by the licensee, approximately thirteen consecutive weeks, providing that the beginning of the first quarter in a year coincides with the starting date of the year and that no day is omitted or duplicated in consecutive quarters.

(105) "Rad" means the special unit of absorbed dose. One rad equals one-hundredth of a joule per kilogram of material; for example, if tissue is the material of interest, then 1 rad equals 100 ergs per gram of tissue. One rad is equal to an absorbed dose of 100 erg/gram or 0.01 joule/kilogram (0.01 gray).

(106) "Radiation" means alpha particles, beta particles, gamma rays, X rays, neutrons, high-speed electrons, high-speed protons, and other particles capable of producing ions. For purposes of these regulations, ionizing radiation is an equivalent term. Radiation, as used in these regulations, does not include magnetic fields or nonionizing radiation, like radiowaves or microwaves, visible, infrared, or ultraviolet light.

(107) "Radiation area" means any area, accessible to individuals, in which radiation levels could result in an individual receiving a dose equivalent in excess of 0.05 mSv (0.005 rem) in one hour at thirty centimeters from the source of radiation or from any surface that the radiation penetrates.

(108) "Radiation machine" means any device capable of producing ionizing radiation except those devices with radioactive materials as the only source of radiation.

(109) "Radiation safety officer" means an individual who has the knowledge and responsibility to apply appropriate radiation protection regulations and has been assigned that responsibility by the licensee or registrant.

(110) "Radiation source." See "Source of radiation."

(111) "Radioactive material" means any material (solid, liquid, or gas) which emits radiation spontaneously.

(112) "Radioactive waste" means any radioactive material which is no longer of use and intended for disposal or treatment for the purposes of disposal.

(113) "Radioactivity" means the transformation of unstable atomic nuclei by the emission of radiation.

(114) "Reference man" means a hypothetical aggregation of human physical and physiological characteristics determined by international consensus. These characteristics may be used by researchers and public health workers to standardize results of experiments and to relate biological insult to a common base.

(115) "Registrable item" means any radiation machine except those exempted by RCW 70.98.180 or exempted by the department under the authority of RCW 70.98.080.

(116) "Registrant" means any person who is registered by the department or is legally obligated to register with the department in accordance with these rules and the act.

(117) "Registration" means registration with the department in accordance with the regulations adopted by the department.

(118) "Regulations of the United States Department of Transportation" means the regulations in 49 CFR Parts 170-189, 14 CFR Part 103, and 46 CFR Part 146.

(119) "Rem" means the special unit of any of the quantities expressed as dose equivalent. The dose equivalent in rem is equal to the absorbed dose in rad multiplied by the quality factor (1 rem = 0.01 Sv).

(120) "Research and development" means: (a) Theoretical analysis, exploration, or experimentation; or (b) the extension of investigative findings and theories of a scientific or technical nature into practical application for experimental and demonstration purposes, including the experimental production and testing of models, devices, equipment, materials, and processes. Research and development does not include the internal or external administration of radiation or radioactive material to human beings.

(121) "Respiratory protective equipment" means an apparatus, such as a respirator, used to reduce an individual's intake of airborne radioactive materials.

(122) "Restricted area" means any area to which access is limited by the licensee or registrant for purposes of protecting individuals against undue risks from exposure to radiation and radioactive material. "Restricted area" does not include any areas used for residential quarters, although a separate room or rooms in a residential building may be set apart as a restricted area.

(123) "Roentgen" (R) means the special unit of exposure. One roentgen equals 2.58×10^{-4} coulombs/kilogram of air.

(124) "Sanitary sewerage" means a system of public sewers for carrying off waste water and refuse, but excluding sewage treatment facilities, septic tanks, and leach fields owned or operated by the licensee or registrant.

(125) "Sealed source" means any radioactive material that is encased in a capsule designed to prevent leakage or the escape of the radioactive material.

(126) "Self-contained breathing apparatus" (SCBA) means an atmosphere-supplying respirator for which the breathing air source is designed to be carried by the user.

(127) "Shallow dose equivalent" (H_s), which applies to the external exposure of the skin of the whole body or the skin of an extremity, means the dose equivalent at a tissue depth of 0.007 centimeter (7 mg/cm^2).

(128) "SI" means an abbreviation of the International System of Units.

(129) "Sievert" means the SI unit of any of the quantities expressed as dose equivalent. The dose equivalent in sievert is equal to the absorbed dose in gray multiplied by the quality factor (1 Sv = 100 rem).

(130) "Site area emergency" means events may occur, are in progress, or have occurred that could lead to a significant release of radioactive material and that could require a response by offsite response organizations to protect persons offsite.

(131) "Site boundary" means that line beyond which the land or property is not owned, leased, or otherwise controlled by the licensee or registrant.

(132) "Source container" means a device in which radioactive material is transported or stored.

(133) "Source material" means: (a) Uranium or thorium, or any combination thereof, in any physical or chemical form, or (b) ores which contain by weight one-twentieth of one percent (0.05 percent) or more of (i) uranium, (ii) thorium, or (iii) any combination thereof. Source material does not include special nuclear material.

(134) "Source material milling" means the extraction or concentration of uranium or thorium from any ore processing primarily for its source material content.

(135) "Source of radiation" means any radioactive material, or any device or equipment emitting or capable of producing ionizing radiation.

(136) "Special nuclear material" means:

(a) Plutonium, uranium-233, uranium enriched in the isotope 233 or in the isotope 235, and any other material that the United States Nuclear Regulatory Commission, under the provisions of section 51 of the Atomic Energy Act of 1954, as amended, determines to be special nuclear material, but does not include source material; or

(b) Any material artificially enriched in any of the foregoing, but does not include source material.

(137) "Special nuclear material in quantities not sufficient to form a critical mass" means uranium enriched in the isotope U-235 in quantities not exceeding three hundred fifty grams of contained U-235; uranium-233 in quantities not exceeding two hundred grams; plutonium in quantities not exceeding two hundred grams; or any combination of them in accordance with the following formula: For each kind of special nuclear material, determine the ratio between the quantity of that special nuclear material and the quantity specified above for the same kind of special nuclear material. The sum of the ratios for all of the kinds of special nuclear material in combination shall not exceed "1" (i.e., unity). For example, the following quantities in combination would not exceed the limitation and are within the formula:

$$\frac{175 \text{ (grams contained U-235)}}{350} + \frac{50 \text{ (grams U-233)}}{200} + \frac{50 \text{ (grams Pu)}}{200} < 1$$

(138) "Stochastic effect" means a health effect that occurs randomly and for which the probability of the effect occurring, rather than its severity, is assumed to be a linear function of dose without threshold. Hereditary effects and cancer incidence are examples of stochastic effects. For purposes of these regulations, probabilistic effect is an equivalent term.

(139) "Supplied-air respirator" (SAR) or "airline respirator" means an atmosphere-supplying respirator for which the source of breathing air is not designed to be carried by the user.

(140) "Survey" means an evaluation of the radiological conditions and potential hazards incident to the production, use, release, disposal, or presence of sources of radiation. When appropriate, the evaluation includes, but is not limited to, tests, physical examinations, calculations and measurements of levels of radiation or concentration of radioactive material present.

(141) "Test" means (a) the process of verifying compliance with an applicable regulation, or (b) a method for determining the characteristics or condition of sources of radiation or components thereof.

(142) "These rules" mean all parts of the rules for radiation protection of the state of Washington.

(143) "Tight-fitting facepiece" means a respiratory inlet covering that forms a complete seal with the face.

(144) "Total effective dose equivalent" (TEDE) means the sum of the deep dose equivalent for external exposures and the committed effective dose equivalent for internal exposures.

(145) "Total organ dose equivalent" (TODE) means the sum of the deep dose equivalent and the committed dose equivalent to the organ or tissue receiving the highest dose.

(146) "United States Department of Energy" means the Department of Energy established by Public Law 95-91, August 4, 1977, 91 Stat. 565, 42 U.S.C. 7101 et seq., to the extent that the department exercises functions formerly vested in the United States Atomic Energy Commission, its chairman, members, officers and components and transferred to the United States Energy Research and Development Administration and to the administrator thereof under sections 104 (b), (c) and (d) of the Energy Reorganization Act of 1974 (Public Law 93-438, October 11, 1974, 88 Stat. 1233 at 1237, 42 U.S.C. 5814 effective January 19, 1975) and retransferred to the Secretary of Energy under section 301(a) of the Department of Energy Organization Act (Public Law 95-91, August 4, 1977, 91 Stat. 565 at 577-578, 42 U.S.C. 7151, effective October 1, 1977).

(147) "Unrefined and unprocessed ore" means ore in its natural form prior to any processing, such as grinding, roasting, beneficiating, or refining.

(148) "Unrestricted area" (uncontrolled area) means any area which is not a restricted area. Areas where the external dose exceeds 2 mrem in any one hour or where the public dose, taking into account occupancy factors, will exceed 100 mrem total effective dose equivalent in any one year must be restricted.

(149) "User seal check" (fit check) means an action conducted by the respirator user to determine if the respirator is properly seated to the face. Examples include negative pressure check, positive pressure check, irritant smoke check, or isoamyl acetate check.

(150) "Very high radiation area" means an area, accessible to individuals, in which radiation levels from radiation sources external to the body could result in an individual receiving an absorbed dose in excess of 5 Gy (500 rad) in one hour at one meter from a source of radiation or one meter from any surface that the radiation penetrates.

(151) "Waste handling licensees" mean persons licensed to receive and store radioactive wastes prior to disposal and/or persons licensed to dispose of radioactive waste.

(152) "Week" means seven consecutive days starting on Sunday.

(153) "Weighting factor" w_T for an organ or tissue (T) means the proportion of the risk of stochastic effects resulting

from irradiation of that organ or tissue to the total risk of stochastic effects when the whole body is irradiated uniformly. For calculating the effective dose equivalent, the values of w_T are:

ORGAN DOSE WEIGHTING FACTORS

Organ or Tissue	w_T
Gonads	0.25
Breast	0.15
Red bone marrow	0.12
Lung	0.12
Thyroid	0.03
Bone surfaces	0.03
Remainder	0.30[a]
Whole Body	1.00[b]

[a] 0.30 results form 0.06 for each of 5 "remainder" organs, excluding the skin and the lens of the eye, that receive the highest doses.

[b] For the purpose of weighting the external whole body dose, for adding it to the internal dose, a single weighting factor, $w_T = 1.0$, has been specified. The use of other weighting factors for external exposure will be approved on a case-by-case basis until such time as specific guidance is issued.

(154) "Whole body" means, for purposes of external exposure, head, trunk including male gonads, arms above the elbow, or legs above the knee.

(155) "Worker" means an individual engaged in activities under a license or registration issued by the department and controlled by a licensee or registrant but does not include the licensee or registrant. Where the licensee or registrant is an individual rather than one of the other legal entities defined under "person," the radiation exposure limits for the worker also apply to the individual who is the licensee or registrant. If students of age eighteen years or older are subjected routinely to work involving radiation, then the students are considered to be workers. Individuals of less than eighteen years of age shall meet the requirements of WAC 246-221-050.

(156) "Working level" (WL) means any combination of short-lived radon daughters in 1 liter of air that will result in the ultimate emission of 1.3×10^5 MeV of potential alpha particle energy. The short-lived radon daughters are — for radon-222: Polonium-218, lead-214, bismuth-214, and polonium-214; and for radon-220: Polonium-216, lead-212, bismuth-212, and polonium-212.

(157) "Working level month" (WLM) means an exposure to one working level for one hundred seventy hours — two thousand working hours per year divided by twelve months per year is approximately equal to one hundred seventy hours per month.

(158) "Year" means the period of time beginning in January used to determine compliance with the provisions of these regulations. The licensee or registrant may change the starting date of the year used to determine compliance by the licensee or registrant provided that the change is made at the beginning of the year and that no day is omitted or duplicated in consecutive years.

[Statutory Authority: RCW 70.98.050. 06-05-019, § 246-220-010, filed 2/6/06, effective 3/9/06; 04-23-093, § 246-220-010, filed 11/17/04, effective 12/18/04; 01-05-110, § 246-220-010, filed 2/21/01, effective 3/24/01; 00-08-013, § 246-220-010, filed 3/24/00, effective 4/24/00; 99-15-105, § 246-220-010, filed 7/21/99, effective 8/21/99; 98-13-037, § 246-220-010, filed 6/8/98, effective 7/9/98; 95-01-108, § 246-220-010, filed 12/21/94, effective 1/21/95; 94-01-073, § 246-220-010, filed 12/9/93, effective 1/9/94. Statutory Authority: RCW 70.98.050 and 70.98.080. 91-15-112 (Order 184), § 246-220-010, filed 7/24/91, effective 8/24/91. Statutory Authority: RCW 43.70.-040. 91-02-049 (Order 121), recodified as § 246-220-010, filed 12/27/90, effective 1/31/91. Statutory Authority: RCW 70.98.080. 87-01-031 (Order 2450), § 402-12-050, filed 12/11/86; 83-19-050 (Order 2026), § 402-12-050, filed 9/16/83. Statutory Authority: Chapter 70.121 RCW. 81-16-031 (Order 1683), § 402-12-050, filed 7/28/81. Statutory Authority: RCW 70.98.050. 81-01-011 (Order 1570), § 402-12-050, filed 12/8/80; Order 1095, § 402-12-050, filed 2/6/76; Order 708, § 402-12-050, filed 8/24/72; Order 1, § 402-12-050, filed 7/2/71; Order 1, § 402-12-050, filed 1/8/69; Rules (part), filed 10/26/66.]

WAC 246-220-020 Records. (1) Each licensee or registrant shall maintain records relating to the receipt, use, storage, transfer, or disposal of radiation sources, and such other records as the department may require which will permit the determination of the extent of occupational and public exposure from such radiation sources. Copies of these records shall be submitted to the department on request. These requirements are subject to such exemptions as may be provided by department rules.

(2) In accordance with the Public Disclosure Act, the department shall make available to each licensee and/or registrant departmental records pertaining to that licensee or registrant, at his/her written request.

[Statutory Authority: RCW 43.70.040. 91-02-049 (Order 121), recodified as § 246-220-020, filed 12/27/90, effective 1/31/91. Statutory Authority: RCW 70.98.050. 81-01-011 (Order 1570), § 402-12-080, filed 12/8/80; Order 1095, § 402-12-080, filed 2/6/76; Order 1, § 402-12-080, filed 1/8/69; Rules (part), filed 10/26/66.]

WAC 246-220-030 Inspections. (1) Each licensee and/or registrant shall afford the department at all reasonable times opportunity to inspect sources of radiation and the premises and facilities wherein such sources of radiation are used or stored.

(2) Each licensee and/or registrant shall make available to the department for inspection, upon reasonable notice, records maintained pursuant to these regulations.

(3) In accordance with the Public Disclosure Act, the department shall make available to each licensee and/or registrant a copy of every inspection report written which covers any inspection of the licensee's and/or registrant's source of radiation, records, premises, or facilities. Copies of these inspection records shall be submitted to the licensee or registrant by the department upon the receipt of the written request of the licensee and/or registrant.

(4) Any person who resists, impedes, or in any manner interferes with, any individual who performs inspections which are related to any activity or facility registration/license issued by the department is subject to immediate license and/or registration certificate revocation as well as applicable civil and criminal penalties.

[Statutory Authority: RCW 43.70.040. 91-02-049 (Order 121), recodified as § 246-220-030, filed 12/27/90, effective 1/31/91. Statutory Authority: RCW 70.98.080. 83-19-050 (Order 2026), § 402-12-090, filed 9/16/83. Statutory Authority: RCW 70.98.050. 81-01-011 (Order 1570), § 402-12-090, filed 12/8/80; Order 1095, § 402-12-090, filed 2/6/76; Order 1, § 402-12-090, filed 1/8/69; Rules (part), filed 10/26/66.]

WAC 246-220-040 Tests and surveys. (1) Each licensee and registrant shall perform upon instructions from the

department or shall permit the department to perform such reasonable tests and surveys as the department deems appropriate or necessary including, but not limited to, tests and surveys of:

(a) Sources of radiation;

(b) Facilities wherein sources of radiation are used or stored;

(c) Radiation detection and monitoring instruments; and

(d) Other equipment and devices used in connection with utilization or storage of licensed or registered sources of radiation.

(2) In accordance with the Public Disclosure Act, the department shall provide to the licensee and/or registrant copies of all tests and surveys conducted on the licensee's and/or registrant's sources of radiation, upon written request of the licensee and/or registrant. The department shall acknowledge the receipt of the request in a timely manner by telephone or letter.

[Statutory Authority: RCW 43.70.040. 91-02-049 (Order 121), recodified as § 246-220-040, filed 12/27/90, effective 1/31/91. Statutory Authority: RCW 70.98.050. 81-01-011 (Order 1570), § 402-12-100, filed 12/8/80; Order 1095, § 402-12-100, filed 2/6/76; Order 1, § 402-12-100, filed 1/8/69; Rules (part), filed 10/26/66.]

WAC 246-220-050 Exemptions. (1) The department may, upon application therefor or upon its own initiative, grant such exemptions or exceptions from the requirements of these regulations as it determines are authorized by law and will not result in undue hazard to public health and safety or property.

(2) Any U.S. Department of Energy contractor or subcontractor and any U.S. Nuclear Regulatory Commission contractor or subcontractor of the following categories operating within this state is exempt from these regulations to the extent that such contractor or subcontractor under the applicable contract receives, possesses, uses, transfers or acquires sources of radiation:

(a) Prime contractors performing work for the Department of Energy at U.S. government-owned or controlled sites, including the transportation of sources of radiation to or from such sites and the performance of contract services during temporary interruptions of such transportation;

(b) Prime contractors of the Department of Energy performing research in, or development, manufacture, storage, testing or transportation of, atomic weapons or components thereof;

(c) Prime contractors of the Department of Energy using or operating nuclear reactors or other nuclear devices in a United States government-owned vehicle or vessel; and

(d) Any other prime contractor or subcontractor of the Department of Energy or of the Nuclear Regulatory Commission when the state and the Nuclear Regulatory Commission jointly determine (i) that the exemption of the prime contractor or subcontractor is authorized by law, and (ii) that under the terms of the contract or subcontract, there is adequate assurance that the work thereunder can be accomplished without undue risk to the public health and safety.

[Statutory Authority: RCW 70.98.050 and 70.98.080. 91-15-112 (Order 184), § 246-220-050, filed 7/24/91, effective 8/24/91. Statutory Authority: RCW 43.70.040. 91-02-049 (Order 121), recodified as § 246-220-050, filed 12/27/90, effective 1/31/91. Statutory Authority: RCW 70.98.050. 81-01-011 (Order 1570), § 402-12-125, filed 12/8/80; Order 1095, § 402-12-125, filed 2/6/76.]

WAC 246-220-060 Violations. (1) An injunction or other court order may be obtained prohibiting any violation of any provision of the act or any regulation or order issued thereunder.

(2) Any person who violates any provision of the act or any regulation or order issued thereunder may be guilty of a gross misdemeanor and upon conviction, may be punished by fine or imprisonment or both, as provided by law.

(3) A person who knowingly provides to any licensee, applicant, contractor, or subcontractor, components, equipment, materials, or other goods or services, that relate to a licensee's or applicant's activities subject to these regulations, may be individually subject to department enforcement action for deliberate misconduct.

(a) For the purposes of this subsection, "person" means:

(i) A radioactive materials licensee;

(ii) An applicant for a radioactive materials license;

(iii) An employee of a radioactive materials licensee or applicant; or

(iv) Any contractor (including a supplier or consultant), subcontractor, or employee of a contractor or subcontractor of any radioactive materials licensee or applicant for a radioactive materials license.

(b) Persons who knowingly provide to any licensee, applicant, contractor, or subcontractor, components, equipment, materials, or other goods or services, that relate to a licensee's or applicant's activities subject to these regulations may not:

(i) Engage in deliberate misconduct that causes or would have caused, if not detected, a licensee, or applicant to be in violation of any rule, regulation, or order; or any term, condition, or limitation of any license issued by the department; or

(ii) Deliberately submit to the department, a licensee, an applicant, or a licensee's or applicant's contractor or subcontractor, information that the person submitting the information knows to be incomplete or inaccurate in some respect material to the department.

(c) For the purposes of this section, deliberate misconduct by a person means an intentional act or omission that the person knows would cause a licensee or applicant to be in violation of any rule, regulation, or order; or any term, condition, or limitation, of any license issued by the department.

[Statutory Authority: RCW 70.98.050. 01-02-067, § 246-220-060, filed 12/29/00, effective 1/29/01. Statutory Authority: RCW 43.70.040. 91-02-049 (Order 121), recodified as § 246-220-060, filed 12/27/90, effective 1/31/91; Order 1095, § 402-12-130, filed 2/6/76; Order 1, § 402-12-130, filed 1/8/69; Rules (part), filed 10/26/66.]

WAC 246-220-070 Impounding. Sources of radiation shall be subject to impoundment pursuant to RCW 70.98.-160.

[Statutory Authority: RCW 43.70.040. 91-02-049 (Order 121), recodified as § 246-220-070, filed 12/27/90, effective 1/31/91. Statutory Authority: RCW 70.98.080. 87-01-031 (Order 2450), § 402-12-140, filed 12/11/86; Order 1095, § 402-12-140, filed 2/6/76; Order 1, § 402-12-140, filed 1/8/69; Rules (part), filed 10/26/66.]

WAC 246-220-080 Prohibited uses. (1) Hand-held fluoroscopic screens shall not be used unless listed in the Regis-

try of Sealed Sources and Devices or accepted for certifications by the United States Food and Drug Administration, Center for Devices and Radiological Health.

(2) Shoe-fitting fluoroscopic devices shall not be used.

[Statutory Authority: RCW 70.98.050. 94-01-073, § 246-220-080, filed 12/9/93, effective 1/9/94. Statutory Authority: RCW 43.70.040. 91-02-049 (Order 121), recodified as § 246-220-080, filed 12/27/90, effective 1/31/91; Order 1095, § 402-12-150, filed 2/6/76.]

WAC 246-220-090 Communications. All communications and reports concerning these regulations, and applications filed thereunder, should be addressed to the Department of Health, Division of Radiation Protection, P.O. Box 47827, Olympia, Washington 98504-7827. The emergency telephone number in Seattle, is 206-682-5327 or 206 (NUCLEAR).

[Statutory Authority: RCW 70.98.050. 94-01-073, § 246-220-090, filed 12/9/93, effective 1/9/94. Statutory Authority: RCW 70.98.050 and 70.98.080. 91-15-112 (Order 184), § 246-220-090, filed 7/24/91, effective 8/24/91. Statutory Authority: RCW 43.70.040. 91-02-049 (Order 121), recodified as § 246-220-090, filed 12/27/90, effective 1/31/91. Statutory Authority: RCW 70.98.080. 83-19-050 (Order 2026), § 402-12-160, filed 9/16/83. Statutory Authority: RCW 70.98.050. 81-01-011 (Order 1570), § 402-12-160, filed 12/8/80; Order 1095, § 402-12-160, filed 2/6/76.]

WAC 246-220-100 Additional requirements. The department may, by rule, regulation, or order, impose upon any licensee or registrant such requirements in addition to those established in these regulations as it deems appropriate or necessary to minimize danger to public health and safety or property.

[Statutory Authority: RCW 43.70.040. 91-02-049 (Order 121), recodified as § 246-220-100, filed 12/27/90, effective 1/31/91. Statutory Authority: RCW 70.98.050. 81-01-011 (Order 1570), § 402-12-170, filed 12/8/80; Order 1095, § 402-12-170, filed 2/6/76.]

Chapter 246-221 WAC
RADIATION PROTECTION STANDARDS

WAC

246-221-001 Purpose and scope.
246-221-005 Radiation protection programs.
246-221-010 Occupational dose limits for adults.
246-221-015 Compliance with requirements for summation of external and internal doses.
246-221-020 Determination of prior occupational dose.
246-221-030 Requirements for planned special exposures.
246-221-040 Determination of internal exposure of individuals to concentrations of radioactive materials in restricted areas.
246-221-050 Occupational dose limits for minors.
246-221-055 Dose equivalent to an embryo/fetus.
246-221-060 Dose limits for individual members of the public.
246-221-070 Compliance with dose limits for individual members of the public.
246-221-080 Leak tests.
246-221-090 Personnel monitoring for external dose.
246-221-100 Personnel monitoring for internal dose.
246-221-102 Control of access to high radiation areas.
246-221-104 Control of access to very high radiation areas.
246-221-106 Control of access to very high radiation areas—Irradiators.
246-221-110 Surveys.
246-221-113 Use of process, engineering or other controls.
246-221-117 Use of individual respiratory protection equipment.
246-221-120 Caution signs, and labels.
246-221-130 Exceptions from posting and labeling requirements.
246-221-140 Instruction of personnel.
246-221-150 Security and control of radioactive material and radiation machines.
246-221-160 Procedures for picking up, receiving, and opening packages.
246-221-170 Waste disposal, general requirement.
246-221-180 Method of obtaining approval of proposed disposal procedures.
246-221-190 Disposal by release into sanitary sewerage systems.
246-221-200 Disposal by burial in soil.
246-221-210 Disposal by incineration.
246-221-220 Disposal of specific wastes.
246-221-230 Records important to radiation safety.
246-221-240 Reports of stolen, lost or missing radiation sources.
246-221-250 Notification of incidents.
246-221-260 Reports of overexposures and excessive levels and concentrations.
246-221-265 Special reports to the department—Planned special exposures and leaking sources.
246-221-270 Vacating premises and release of equipment.
246-221-275 Notification of changes in a facility.
246-221-280 Notifications and reports to individuals.
246-221-285 Assigned protection factors for respirators[a].
246-221-290 Appendix A—Annual limits on intake (ALI) and derived air concentrations (DAC) of radionuclides for occupational exposure; effluent concentrations; concentrations for release to sanitary sewerage.
246-221-300 Appendix B—Minimum quantities of radioactive material requiring labeling.

WAC 246-221-001 Purpose and scope. (1) This chapter establishes standards for protection against radiation hazards. Except as otherwise specifically provided, this chapter applies to all licensees or registrants. The requirements of this chapter are designed to control the receipt, possession, use, transfer, and disposal of sources of radiation by any licensee or registrant so the total dose to an individual, including doses resulting from all sources of radiation other than background radiation, does not exceed the standards for protection against radiation prescribed in this chapter.

(2) The limits in this chapter do not apply to doses due to background radiation, to exposure of patients to radiation for the purpose of medical diagnosis or therapy, to exposure from individuals administered radioactive material and released under chapter 246-240 WAC, or to voluntary participation in medical research programs.

(3) Nothing in this chapter shall be interpreted as limiting actions that may be necessary to protect health and safety in an emergency.

(4) The definitions contained in WAC 246-220-010 also apply to this chapter. WAC 246-220-007, Statement of philosophy, is directly applicable to this chapter.

[Statutory Authority: RCW 70.98.050. 06-05-019, § 246-221-001, filed 2/6/06, effective 3/9/06; 98-13-037, § 246-221-001, filed 6/8/98, effective 7/9/98; 94-01-073, § 246-221-001, filed 12/9/93, effective 1/9/94. Statutory Authority: RCW 70.98.050 and 70.98.080. 91-15-112 (Order 184), § 246-221-001, filed 7/24/91, effective 8/24/91. Statutory Authority: RCW 43.70.-040. 91-02-049 (Order 121), recodified as § 246-221-001, filed 12/27/90, effective 1/31/91; Order 1095, § 402-24-010, filed 2/6/76; Order 1, § 402-24-010, filed 1/8/69; Rules (part), filed 10/26/66.]

WAC 246-221-005 Radiation protection programs. (1) Each specific licensee shall develop, document, and implement a radiation protection program sufficient to ensure compliance with the provisions of this chapter.

(2) The licensee shall use, to the extent practical, procedures and engineering controls based upon sound radiation protection principles to achieve occupational doses and doses to members of the public that are as low as is reasonably achievable (ALARA).

(3) The licensee shall review the radiation protection program content and implementation at the frequency specified in the license.

(4) To implement the ALARA requirements of subsection (2) of this section, and notwithstanding the requirements of WAC 246-221-060, a constraint on air emission of radioactive material to the environment, excluding radon-220, radon-222 and their daughters, shall be established by licensees such that the individual member of the public likely to receive the highest dose will not be expected to receive a total effective dose equivalent in excess of 0.1 mSv (10 mrem) per year from these emissions. This dose constraint does not apply to sealed sources or to accelerators less than 200MeV. If a licensee subject to this requirement exceeds this dose constraint, the licensee shall report the exceedance as provided in WAC 246-221-260 and promptly take appropriate corrective action to ensure against recurrence.

(5) Each licensee shall maintain records of the radiation protection program, including:

(a) The provisions of the program; and

(b) Audits, where required, and other reviews of program content and implementation.

[Statutory Authority: RCW 70.98.050. 01-05-110, § 246-221-005, filed 2/21/01, effective 3/24/01; 99-15-105, § 246-221-005, filed 7/21/99, effective 8/21/99; 94-01-073, § 246-221-005, filed 12/9/93, effective 1/9/94.]

WAC 246-221-010 Occupational dose limits for adults. (1) The licensee or registrant shall control the occupational dose to individual adults, except for planned special exposures pursuant to WAC 246-221-030, to the following dose limits:

(a) An annual limit, which is the more limiting of:

(i) The total effective dose equivalent being equal to 0.05 Sv (5 rem); or

(ii) The sum of the deep dose equivalent and the committed dose equivalent to any individual organ or tissue other than the lens of the eye being equal to 0.50 Sv (50 rem).

(b) The annual limits to the lens of the eye, to the skin of the whole body, and to the skin of the extremities which are:

(i) A lens dose equivalent of 0.15 Sv (15 rem); and

(ii) A shallow dose equivalent of 0.50 Sv (50 rem) to the skin of the whole body or to the skin of any extremity.

(2) Doses received in excess of the annual limits, including doses received during accidents, emergencies, and planned special exposures, must be subtracted from the limits specified in WAC 246-221-030 for planned special exposures that the individual may receive during the current year and during the individual's lifetime.

(3) The assigned deep dose equivalent shall be for the portion of the body receiving the highest exposure. The assigned shallow dose equivalent shall be the dose averaged over the contiguous ten square centimeters of skin receiving the highest exposure. The deep dose equivalent, lens dose equivalent and shallow dose equivalent may be assessed from surveys or other radiation measurements for the purpose of demonstrating compliance with the occupational dose limits, if the individual monitoring device was not in the region of highest potential exposure, or the results of individual monitoring are unavailable.

(4) Derived air concentration (DAC) and annual limit on intake (ALI) values are specified in WAC 246-221-290 and may be used to determine the individual's dose and to demonstrate compliance with the occupational dose limits.

(5) Notwithstanding the annual dose limits, the licensee shall limit the soluble uranium intake by an individual to 10 milligrams in a week in consideration of chemical toxicity.

(6) The licensee or registrant shall reduce the dose that an individual may be allowed to receive in the current year by the amount of occupational dose received while employed by any other person during the current year as determined in accordance with WAC 246-221-020.

[Statutory Authority: RCW 70.98.050. 04-23-093, § 246-221-010, filed 11/17/04, effective 12/18/04; 01-05-110, § 246-221-010, filed 2/21/01, effective 3/24/01; 94-01-073, § 246-221-010, filed 12/9/93, effective 1/9/94. Statutory Authority: RCW 70.98.050 and 70.98.080. 91-15-112 (Order 184), § 246-221-010, filed 7/24/91, effective 8/24/91. Statutory Authority: RCW 43.70.040. 91-02-049 (Order 121), recodified as § 246-221-010, filed 12/27/90, effective 1/31/91. Statutory Authority: RCW 70.98.080. 87-01-031 (Order 2450), § 402-24-020, filed 12/11/86. Statutory Authority: RCW 70.98.050. 81-01-011 (Order 1570), § 402-24-020, filed 12/8/80; Order 1095, § 402-24-020, filed 2/6/76; Order 1, § 402-24-020, filed 1/8/69; Rules (part), filed 10/26/66.]

WAC 246-221-015 Compliance with requirements for summation of external and internal doses. (1) If the licensee is required to monitor under both WAC 246-221-090 and 246-221-100, the licensee shall demonstrate compliance with the dose limits by summing external and internal doses. If the licensee is required to monitor only under WAC 246-221-090 or only under WAC 246-221-100, then summation is not required to demonstrate compliance with the dose limits. The licensee may demonstrate compliance with the requirements for summation of external and internal doses under subsections (2), (3), and (4) of this section. The dose equivalents for the lens of the eye, the skin, and the extremities are not included in the summation, but are subject to separate limits.

(2) **Intake by inhalation.** If the only intake of radionuclides is by inhalation, the total effective dose equivalent limit is not exceeded if the sum of the deep dose equivalent divided by the total effective dose equivalent limit, and one of the following, does not exceed unity:

(a) The sum of the fractions of the inhalation ALI for each radionuclide; or

(b) The total number of derived air concentration-hours (DAC-hours) for all radionuclides divided by two thousand; or

(c) The sum of the calculated committed effective dose equivalents to all significantly irradiated organs or tissues (T) calculated from bioassay data using appropriate biological models and expressed as a fraction of the annual limit. For purposes of this requirement, an organ or tissue is deemed to be significantly irradiated if, for that organ or tissue, the product of the weighting factors, w_T, and the committed dose equivalent, $H_{T,50}$, per unit intake is greater than ten percent of the maximum weighted value of H_{50}, that is, $w_T H_{T,50}$, per unit intake for any organ or tissue.

(3) **Intake by oral ingestion.** If the occupationally exposed individual also receives an intake of radionuclides by oral ingestion greater than ten percent of the applicable oral ALI, the licensee shall account for this intake and include it in demonstrating compliance with the limits.

(4) **Intake through wounds or absorption through skin.** The licensee shall evaluate and, to the extent practical, account for intakes through wounds or skin absorption. The

intake through intact skin has been included in the calculation of DAC for hydrogen-3 and does not need to be evaluated or accounted for pursuant to this section.

(5) **External dose from airborne radioactive material.** Licensees shall, when determining the dose from airborne radioactive material, include the contribution to the deep dose equivalent, lens dose equivalent, and shallow dose equivalent from external exposure to the radioactive cloud. Airborne radioactivity measurements and DAC values shall not be used as the primary means to assess the deep dose equivalent when the airborne radioactive material includes radionuclides other than noble gases or if the cloud of airborne radioactive material is not relatively uniform. The determination of the deep dose equivalent to an individual shall be based upon measurements using instruments or individual monitoring devices.

[Statutory Authority: RCW 70.98.050. 01-05-110, § 246-221-015, filed 2/21/01, effective 3/24/01; 94-01-073, § 246-221-015, filed 12/9/93, effective 1/9/94.]

WAC 246-221-020 Determination of prior occupational dose. (1) For each individual who is likely to receive, in a year, an occupational dose requiring monitoring pursuant to WAC 246-221-090 and 246-221-100, the licensee or registrant shall:

(a) Determine the occupational radiation dose received during the current year; and

(b) Attempt to obtain the records of lifetime cumulative occupational radiation dose.

(2) Prior to permitting an individual to participate in a planned special exposure, the licensee or registrant shall determine:

(a) The internal and external doses from all previous planned special exposures; and

(b) All doses in excess of the limits, including doses received during accidents and emergencies, received during the lifetime of the individual.

(3) In complying with the requirements of subsection (1) of this section, a licensee or registrant may:

(a) Accept, as a record of the occupational dose that the individual received during the current year, a written signed statement from the individual, or from the individual's most recent employer for work involving radiation exposure, that discloses the nature and the amount of any occupational dose that the individual received during the current year; and

(b) Accept, as the record of lifetime cumulative radiation dose, an up-to-date Form RHF-4A, or equivalent, signed by the individual and countersigned by an appropriate official of the most recent employer for work involving radiation exposure, or the individual's current employer, if the individual is not employed by the licensee or registrant; and

(c) Obtain reports of the individual's dose equivalent from the most recent employer for work involving radiation exposure, or the individual's current employer, if the individual is not employed by the licensee or registrant, by telephone, telegram, facsimile, or letter. The licensee or registrant shall request a written verification of the dose data if the authenticity of the transmitted report cannot be established.

(4) The licensee or registrant shall record the exposure history, as required by subsection (1) of this section, on Form RHF-4A, or other clear and legible record, of all the information required on that form. The form or record shall show each period in which the individual received occupational exposure to radiation or radioactive material and shall be signed by the individual who received the exposure. For each period for which the licensee or registrant obtains reports, the licensee or registrant shall use the dose shown in the report in preparing Form RHF-4A. For any period in which the licensee or registrant does not obtain a report, the licensee or registrant shall place a notation on Form RHF-4A indicating the periods of time for which data are not available.

(5) Licensees or registrants are not required to reevaluate the separate external dose equivalents and internal committed dose equivalents or intakes of radionuclides assessed under the regulations in effect before January 1, 1994. Further, occupational exposure histories obtained and recorded on Form RHF-4 before January 1, 1994, would not have included effective dose equivalent, but may be used in the absence of specific information on the intake of radionuclides by the individual.

(6) If the licensee or registrant is unable to obtain a complete record of an individual's current and previously accumulated occupational dose, the licensee or registrant shall assume:

(a) In establishing administrative controls under WAC 246-221-010(6) for the current year, that the allowable dose limit for the individual is reduced by 12.5 mSv (1.25 rem) for each calendar quarter for which records were unavailable and the individual was engaged in activities that could have resulted in occupational radiation exposure; and

(b) That the individual is not available for planned special exposures.

(7) The licensee or registrant shall retain the records on Form RHF-4A or equivalent until the department terminates each pertinent license requiring this record. The licensee or registrant shall retain records used in preparing Form RHF-4 or RHF-4A for three years after the record is made.

[Statutory Authority: RCW 70.98.050. 00-08-013, § 246-221-020, filed 3/24/00, effective 4/24/00; 94-01-073, § 246-221-020, filed 12/9/93, effective 1/9/94. Statutory Authority: RCW 70.98.050 and 70.98.080. 91-15-112 (Order 184), § 246-221-020, filed 7/24/91, effective 8/24/91. Statutory Authority: RCW 43.70.040. 91-02-049 (Order 121), recodified as § 246-221-020, filed 12/27/90, effective 1/31/91. Statutory Authority: RCW 70.98.050. 81-01-011 (Order 1570), § 402-24-024, filed 12/8/80; Order 1095, § 402-24-024, filed 2/6/76.]

WAC 246-221-030 Requirements for planned special exposures. A licensee or registrant may authorize an adult worker to receive doses in addition to and accounted for separately from the doses received under the limits specified in WAC 246-221-010 provided that each of the following conditions is satisfied:

(1) The licensee or registrant authorizes a planned special exposure only in an exceptional situation when alternatives that might avoid the dose estimated to result from the planned special exposure are unavailable or impractical.

(2) The licensee or registrant, and employer if the employer is not the licensee or registrant, specifically authorizes the planned special exposure, in writing, before the exposure occurs.

(3) Before a planned special exposure, the licensee or registrant ensures that each individual involved is:

(a) Informed of the purpose of the planned operation; and

(b) Informed of the estimated doses and associated potential risks and specific radiation levels or other conditions that might be involved in performing the task; and

(c) Instructed in the measures to be taken to keep the dose ALARA considering other risks that may be present.

(4) Prior to permitting an individual to participate in a planned special exposure, the licensee or registrant ascertains prior doses as required by WAC 246-221-020(2) during the lifetime of the individual for each individual involved.

(5) Subject to WAC 246-221-010(2), the licensee or registrant shall not authorize a planned special exposure that would cause an individual to receive a dose from all planned special exposures and all doses in excess of the limits to exceed:

(a) The numerical values of any of the dose limits in WAC 246-221-010(1) in any year; and

(b) Five times the annual dose limits in WAC 246-221-010(1) during the individual's lifetime.

(6) The licensee or registrant maintains records that describe:

(a) The exceptional circumstances requiring the use of a planned special exposure;

(b) The name of the management official who authorized the planned special exposure and a copy of the signed authorization;

(c) What actions were necessary;

(d) Why the actions were necessary;

(e) What precautions were taken to assure that doses were maintained ALARA; and

(f) What individual and collective doses were expected to result.

(7) The licensee or registrant records the best estimate of the dose resulting from the planned special exposure in the individual's record and informs the individual, in writing, of the dose within thirty days from the date of the planned special exposure. The dose from planned special exposures shall not be considered in controlling future occupational dose of the individual under WAC 246-221-010(1) but shall be included in evaluations required by subsections (4) and (5) of this section.

(8) The licensee or registrant submits a written report in accordance with WAC 246-221-265.

[Statutory Authority: RCW 70.98.050. 01-05-110, § 246-221-030, filed 2/21/01, effective 3/24/01; 94-01-073, § 246-221-030, filed 12/9/93, effective 1/9/94. Statutory Authority: RCW 70.98.050 and 70.98.080. 91-15-112 (Order 184), § 246-221-030, filed 7/24/91, effective 8/24/91. Statutory Authority: RCW 43.70.040. 91-02-049 (Order 121), recodified as § 246-221-030, filed 12/27/90, effective 1/31/91. Statutory Authority: RCW 70.98.050. 81-01-011 (Order 1570), § 402-24-027, filed 12/8/80.]

WAC 246-221-040 Determination of internal exposure of individuals to concentrations of radioactive materials in restricted areas. For purposes of assessing dose used to determine compliance with occupational dose equivalent limits, the licensee shall, when required under WAC 246-221-100, take suitable and timely measurements of:

(a) Concentrations of radioactive materials in air in work areas; or

(b) Quantities of radionuclides in the body; or

(c) Quantities of radionuclides excreted from the body; or

(d) Combinations of these measurements.

(2) Unless respiratory protective equipment is used, as provided in WAC 246-221-117, or the assessment of intake is based on bioassays, the licensee shall assume that an individual inhales radioactive material at the airborne concentration in which the individual is present.

(3) When specific information on the physical and biochemical properties of the radionuclides taken into the body or the behavior or the material in an individual is known, the licensee may:

(a) Use that information to calculate the committed effective dose equivalent, and, if used, the licensee shall document that information in the individual's record; and

(b) Upon prior approval of the department, adjust the DAC or ALI values to reflect the actual physical and chemical characteristics of airborne radioactive material, for example, aerosol size distribution or density; and

(c) Separately assess the contribution of fractional intakes of Class D, W, or Y compounds of a given radionuclide to the committed effective dose equivalent. See WAC 246-221-290.

(4) If the licensee chooses to assess intakes of Class Y material using the measurements given in subsection (1)(b) or (c) of this section, the licensee may delay the recording and reporting of the assessments for periods up to seven months, unless otherwise required by WAC 246-221-250 or 246-221-260. This delay permits the licensee to make additional measurements basic to the assessments.

(5) If the identity and concentration of each radionuclide in a mixture are known, the fraction of the DAC applicable to the mixture for use in calculating DAC-hours shall be either:

(a) The sum of the ratios of the concentration to the appropriate DAC value, that is, D, W, or Y, from WAC 246-221-290 for each radionuclide in the mixture; or

(b) The ratio of the total concentration for all radionuclides in the mixture to the most restrictive DAC value for any radionuclide in the mixture.

(6) If the identity of each radionuclide in a mixture is known, but the concentration of one or more of the radionuclides in the mixture is not known, the DAC for the mixture shall be the most restrictive DAC of any radionuclide in the mixture.

(7) When a mixture of radionuclides in air exists, a licensee may disregard certain radionuclides in the mixture if:

(a) The licensee uses the total activity of the mixture in demonstrating compliance with the dose limits in WAC 246-221-010 and in complying with the monitoring requirements in WAC 246-221-100; and

(b) The concentration of any radionuclide disregarded is less than ten percent of its DAC; and

(c) The sum of these percentages for all of the radionuclides disregarded in the mixture does not exceed thirty percent.

(8) When determining the committed effective dose equivalent, the following information may be considered:

(a) In order to calculate the committed effective dose equivalent, the licensee may assume that the inhalation of one ALI, or an exposure of 2,000 DAC-hours, results in a committed effective dose equivalent of 0.05 Sv (5 rem) for radio-

nuclides that have their ALIs or DACs based on the committed effective dose equivalent.

(b) For an ALI and the associated DAC determined by the nonstochastic organ dose limit of 0.50 Sv (50 rem), the intake of radionuclides that would result in a committed effective dose equivalent of 0.05 Sv (5 rem), that is, the stochastic ALI, is listed in parentheses in Table I of WAC 246-221-290. The licensee may, as a simplifying assumption, use the stochastic ALIs to determine committed effective dose equivalent. However, if the licensee uses the stochastic ALIs, the licensee shall also demonstrate that the limit in WAC 246-221-010 (1)(a)(ii) is met.

[Statutory Authority: RCW 70.98.050. 94-01-073, § 246-221-040, filed 12/9/93, effective 1/9/94. Statutory Authority: RCW 70.98.050 and 70.98.-080. 91-15-112 (Order 184), § 246-221-040, filed 7/24/91, effective 8/24/91. Statutory Authority: RCW 43.70.040. 91-02-049 (Order 121), recodified as § 246-221-040, filed 12/27/90, effective 1/31/91. Statutory Authority: RCW 70.98.050. 81-01-011 (Order 1570), § 402-24-030, filed 12/8/80; Order 1095, § 402-24-030, filed 2/6/76; Order 1, § 402-24-030, filed 1/8/69; Rules (part), filed 10/26/66.]

WAC 246-221-050 Occupational dose limits for minors. No licensee or registrant shall possess, use, or transfer sources of radiation in such a manner as to cause any occupationally exposed individual who is under 18 years of age, to receive a dose in excess of 10 percent of the annual occupational dose limits specified in WAC 246-221-010(1).

[Statutory Authority: RCW 70.98.050. 94-01-073, § 246-221-050, filed 12/9/93, effective 1/9/94. Statutory Authority: RCW 70.98.050 and 70.98.-080. 91-15-112 (Order 184), § 246-221-050, filed 7/24/91, effective 8/24/91. Statutory Authority: RCW 43.70.040. 91-02-049 (Order 121), recodified as § 246-221-050, filed 12/27/90, effective 1/31/91. Statutory Authority: RCW 70.98.050. 81-01-011 (Order 1570), § 402-24-035, filed 12/8/80; Order 1095, § 402-24-035, filed 2/6/76.]

WAC 246-221-055 Dose equivalent to an embryo/fetus. (1) The licensee or registrant shall ensure that the dose equivalent to an embryo/fetus during the entire pregnancy, due to occupational exposure of a declared pregnant woman, does not exceed 5 mSv (0.5 rem).

(2) Once pregnancy has been declared, the licensee or registrant shall make every effort to avoid substantial variation above a uniform monthly exposure rate to a declared pregnant woman in order to satisfy the limit in subsection (1) of this section.

(3) If by the time the woman declares pregnancy to the licensee or registrant, the dose equivalent to the embryo/fetus has exceeded 4.5 mSv (0.45 rem), the licensee or registrant shall be deemed to be in compliance with subsection (1) of this section if the additional dose equivalent to the embryo/fetus does not exceed 0.50 mSv (0.05 rem) during the remainder of the pregnancy.

(4) The dose equivalent to an embryo/fetus shall be taken as the sum of:

(a) The deep dose equivalent to the declared pregnant woman; and

(b) The dose equivalent to the embryo/fetus from radionuclides in the embryo/fetus and radionuclides in the declared pregnant woman.

(5) The licensee or registrant shall maintain the records of dose equivalent to an embryo/fetus with the records of dose equivalent to the declared pregnant woman. The declaration of pregnancy, including the estimated date of conception, shall also be kept on file, but may be maintained separately from the dose records.

[Statutory Authority: RCW 70.98.050. 01-05-110, § 246-221-055, filed 2/21/01, effective 3/24/01; 94-01-073, § 246-221-055, filed 12/9/93, effective 1/9/94.]

WAC 246-221-060 Dose limits for individual members of the public. (1) Each licensee or registrant shall conduct operations so that:

(a) The total effective dose equivalent to individual members of the public from the licensed or registered operation does not exceed 1 mSv (0.1 rem) in a year, exclusive of the dose contributions from background radiation, from any medical administration the individual has received, from exposure to individuals administered radioactive material and released under chapter 246-240 WAC, from voluntary participation in medical research programs, and from the licensee's or registrant's disposal of radioactive material into sanitary sewerage in accordance with WAC 246-221-190; and

(b) The dose in any unrestricted area from external sources, exclusive of the dose contributions from patients administered radioactive material and released under chapter 246-240 WAC, does not exceed 0.02 mSv (0.002 rem) in any one hour.

(2) If the licensee or registrant permits members of the public to have access to restricted areas, they shall be escorted and the limits for members of the public continue to apply to those individuals.

(3) Notwithstanding subsection (1) of this section, a licensee or registrant may continue to operate a facility constructed and put into operation prior to January 1, 1994, where the annual dose limit for an individual member of the public is more than 1 mSv (0.1 rem) and less than 5 mSv (0.5 rem) total effective dose equivalent, if:

(a) The facility's approved operating conditions for each radiation source remain the same. Any increase in the following operating conditions shall require reevaluation by the department and/or modification of the facility shielding applicable to the source of radiation to meet the 1 mSv (0.1 rem) total effective dose equivalent limit for individual members of the public: size of the radiation source, workload, or occupancy factors associated with the source of radiation; and

(b) Any change in the permanent shielding of the facility due to remodeling, repair or replacement requires the facility to meet the 1 mSv (0.1 rem) total effective dose equivalent limit for individual members of the public for areas affected by that portion of the shielding.

(4) Each licensee or registrant shall maintain records sufficient to demonstrate compliance with the dose limit for individual members of the public.

[Statutory Authority: RCW 70.98.050. 06-05-019, § 246-221-060, filed 2/6/06, effective 3/9/06; 98-13-037, § 246-221-060, filed 6/8/98, effective 7/9/98; 94-01-073, § 246-221-060, filed 12/9/93, effective 1/9/94. Statutory Authority: RCW 70.98.050 and 70.98.080. 91-15-112 (Order 184), § 246-221-060, filed 7/24/91, effective 8/24/91. Statutory Authority: RCW 43.70.040. 91-02-049 (Order 121), recodified as § 246-221-060, filed 12/27/90, effective 1/31/91. Statutory Authority: RCW 70.98.080. 87-01-031 (Order 2450), § 402-24-040, filed 12/11/86. Statutory Authority: RCW 70.98.050. 81-01-011 (Order 1570), § 402-24-040, filed 12/8/80; Order 1095, § 402-24-040, filed 2/6/76; Order 1, § 402-24-040, filed 1/8/69; Rules (part), filed 10/26/66.]

WAC 246-221-070 Compliance with dose limits for individual members of the public. (1) The licensee shall make or cause to be made surveys of radiation levels in unrestricted areas and radioactive materials in effluents released to unrestricted areas to demonstrate compliance with the dose limits for individual members of the public in WAC 246-221-060.

(2) A licensee shall show compliance with the annual dose limit in WAC 246-221-060 by:

(a) Demonstrating by measurement or calculation that the total effective dose equivalent to the individual likely to receive the highest dose from the licensed operation does not exceed the annual dose limit; or

(b) Demonstrating that:

(i) The annual average concentrations of radioactive material released in gaseous and liquid effluents at the boundary of the unrestricted area do not exceed the values specified in Table II of WAC 246-221-290; and

(ii) If an individual were continually present in an unrestricted area, the dose from external sources would not exceed 0.02 mSv (0.002 rem) in an hour and 0.50 mSv (0.05 rem) in a year.

(3) Upon approval from the department, the licensee may adjust the effluent concentration values in WAC 246-221-290, Table II, for members of the public, to take into account the actual physical and chemical characteristics of the effluents, such as, aerosol size distribution, solubility, density, radioactive decay equilibrium, and chemical form.

(4) The provisions of this section do not apply to disposal of radioactive material into sanitary sewerage systems, which is governed by WAC 246-221-190.

[Statutory Authority: RCW 70.98.050. 94-01-073, § 246-221-070, filed 12/9/93, effective 1/9/94. Statutory Authority: RCW 70.98.050 and 70.98.-080. 91-15-112 (Order 184), § 246-221-070, filed 7/24/91, effective 8/24/91. Statutory Authority: RCW 43.70.040. 91-02-049 (Order 121), recodified as § 246-221-070, filed 12/27/90, effective 1/31/91. Statutory Authority: RCW 70.98.080. 87-01-031 (Order 2450), § 402-24-050, filed 12/11/86; Order 1095, § 402-24-050, filed 2/6/76; Order 1, § 402-24-050, filed 1/8/69; Rules (part), filed 10/26/66.]

WAC 246-221-080 Leak tests. (1) Each sealed radioactive source possessed under the provisions of a specific license, other than hydrogen-3 (tritium), with a half-life greater than thirty days and in any form other than gas, shall be tested and results obtained for leakage and/or contamination prior to initial use and at six-month intervals or as specified by the license, except that each source designed for the purpose of emitting alpha particles shall be tested at intervals not to exceed three months. If at any other time there is reason to suspect that a sealed source might have been damaged, it shall be tested for leakage and results obtained before further use. In the absence of a certificate from a transferor indicating that a test for leakage has been made within six months prior to the transfer (three months for a source designed to emit alpha particles), the sealed source shall not be put into use until tested and the results received.

(2) Leak tests shall be capable of detecting the presence of 185 Bq (0.005 microcurie) of removable contamination. The results of leak tests made pursuant to subsection (1) of this section shall be recorded in units of becquerel or microcuries and shall be maintained for inspection by the department. Any test conducted pursuant to subsection (1) which reveals the presence of 185 Bq (0.005 microcurie) or more of removable contamination shall be considered evidence that the sealed source is leaking. The licensee shall immediately withdraw the source from use shall take action to prevent the spread of contamination and shall cause it to be decontaminated and repaired or to be disposed in accordance with WAC 246-232-080. If a sealed source shows evidence of leaking, a report shall be filed with the department within five days of the test, describing the equipment involved, the test results, and the corrective action taken.

(3) Test samples shall be taken from the sealed source or from the internal surfaces or the opening of the container in which the sealed source is stored or from surfaces of devices or equipment in which the sealed source is permanently mounted. Tests for contamination and leakage may be made by wiping appropriate accessible surfaces on which one might expect contamination to accumulate and measuring these wipes for transferred contamination. Test samples shall also be taken from the interior surfaces of the container in which a sealed source of radium is stored.

(4) Leak tests are required for sealed radioactive sources that are greater than 3.7 MBq (100 microcuries) for beta and gamma emitting sources and greater than 370 KBq (10 microcuries) for sources designed to emit alpha particles.

(5) Tests for leakage or contamination shall be performed by persons specifically authorized by the department, an agreement state, a licensing state, or the United States Nuclear Regulatory Commission to perform such services.

[Statutory Authority: RCW 70.98.050. 94-01-073, § 246-221-080, filed 12/9/93, effective 1/9/94. Statutory Authority: RCW 70.98.050 and 70.98.-080. 91-15-112 (Order 184), § 246-221-080, filed 7/24/91, effective 8/24/91. Statutory Authority: RCW 43.70.040. 91-02-049 (Order 121), recodified as § 246-221-080, filed 12/27/90, effective 1/31/91. Statutory Authority: RCW 70.98.080. 83-19-050 (Order 2026), § 402-24-060, filed 9/16/83. Statutory Authority: RCW 70.98.050. 81-01-011 (Order 1570), § 402-24-060, filed 12/8/80; Order 1095, § 402-24-060, filed 2/6/76; Order 1, § 402-24-060, filed 1/8/69; Rules (part), filed 10/26/66.]

WAC 246-221-090 Personnel monitoring for external dose. Each licensee or registrant shall monitor occupational exposure from sources of radiation at levels sufficient to demonstrate compliance with the occupational dose limits of WAC 246-221-010, 246-221-030, 246-221-050 and 246-221-055.

(1) Each licensee or registrant shall monitor occupational exposure to radiation from licensed (or registered) and unlicensed (or unregistered) radiation sources under the control of the licensee or registrant and shall supply and shall require the use of individual monitoring devices by:

(a) Each adult likely to receive, in one year from sources external to the body, a dose in excess of ten percent of the applicable limits specified in WAC 246-221-010(1).

(b) Each minor likely to receive, in one year from sources external to the body, a deep dose equivalent in excess of 1 mSv (0.1 rem), a lens dose equivalent in excess of 1.5 mSv (0.15 rem), or a shallow dose equivalent to the skin or to the extremities in excess of 5 mSv (0.5 rem).

(c) Each declared pregnant woman likely to receive during the entire pregnancy, from radiation sources external to the body, a deep dose equivalent in excess of 1 mSv (0.1 rem). All of the occupational dose limits specified in WAC 246-221-010 continue to be applicable to the declared preg-

nant worker as long as the embryo/fetus dose limit is not exceeded.

(d) Each individual who enters a high or very high radiation area.

(2) Personnel monitoring devices assigned to an individual:

(a) Shall not intentionally be exposed to give a false or erroneous reading;

(b) Shall be assigned to one individual per exposure interval (i.e., weekly, monthly) and used to determine exposure for that individual only;

(c) Shall not be worn by any individual other than that individual originally assigned to the device;

(d) Personnel monitoring devices that are exposed while not being worn by the assigned individual shall be processed and recorded as soon as possible. A replacement monitoring device shall be assigned to the individual immediately. A record of the circumstances of the exposure shall be retained.

(3) All personnel dosimeters, except for direct and indirect reading pocket ionization chambers and those dosimeters used to measure the dose to any extremities, that require processing to determine the radiation dose and that are utilized by licensees or registrants to comply with subsection (1) of this section, with other applicable provisions of chapters 246-220 through 246-255 WAC, or with conditions specified in a licensee's license must be processed and evaluated by a dosimetry processor:

(a) Holding current personnel dosimetry accreditation from either the National Voluntary Laboratory Accreditation Program (NVLAP) of the National Institute of Standards and Technology (formerly known as the National Bureau of Standards) or the United States Department of Energy Laboratory Accreditation Program for Personnel Dosimetry Systems (DOELAP); and

(b) Approved in this accreditation process for the type of radiation or radiations included in the NVLAP or DOELAP program that most closely approximate the type of radiation or radiations for which the individual wearing the dosimeter is monitored.

(4) For the purposes of this section "dosimetry processor" means an individual or an organization that processes and evaluates personnel monitoring devices in order to determine the radiation dose delivered to the device.

(5) Each licensee or registrant shall maintain records of doses received by all individuals for whom monitoring was required under subsection (1) of this section, and records of doses received during planned special exposures, accidents, and emergency conditions. Assessments of dose equivalent and records made using units in effect before January 1, 1994, need not be changed. These records shall include, when applicable:

(a) The deep dose equivalent to the whole body, lens dose equivalent, shallow dose equivalent to the skin, and shallow dose equivalent to the extremities; and

(b) The total effective dose equivalent when required by WAC 246-221-015; and

(c) The total of the deep dose equivalent and the committed dose to the organ receiving the highest total dose (total organ dose equivalent).

(6) The licensee or registrant shall maintain the records specified in subsection (5) of this section on department Form RHF-5A, in accordance with the instructions provided on the form, or in clear and legible records containing all the information required by Form RHF-5A; and shall update the information at least annually.

(7) Each licensee or registrant shall ensure that individuals, for whom they are required to monitor occupational doses in accordance with subsection (1) of this section, wear individual monitoring devices as follows:

(a) An individual monitoring device used for monitoring the dose to the whole body shall be worn at the unshielded or least shielded location of the whole body likely to receive the highest exposure. When a protective apron is worn, the location of the individual monitoring device is typically at the neck (collar).

(b) Any additional individual monitoring device used for monitoring the dose to an embryo/fetus of a declared pregnant woman, pursuant to WAC 246-221-055(1), shall be located at the waist under any protective apron being worn by the woman.

(c) An individual monitoring device used for monitoring the lens dose equivalent, to demonstrate compliance with WAC 246-221-010 (1)(b)(i), shall be located at the neck (collar), outside any protective apron being worn by the monitored individual, or at an unshielded location closer to the eye.

(d) An individual monitoring device used for monitoring the dose to the extremities, to demonstrate compliance with WAC 246-221-010 (1)(b)(ii), shall be worn on the extremity likely to receive the highest exposure. Each individual monitoring device shall be oriented to measure the highest dose to the extremity being monitored.

[Statutory Authority: RCW 70.98.050. 01-05-110, § 246-221-090, filed 2/21/01, effective 3/24/01; 94-01-073, § 246-221-090, filed 12/9/93, effective 1/9/94. Statutory Authority: RCW 70.98.050 and 70.98.080. 92-06-008 (Order 245), § 246-221-090, filed 2/21/92, effective 3/23/92. Statutory Authority: RCW 43.70.040. 91-02-049 (Order 121), recodified as § 246-221-090, filed 12/27/90, effective 1/31/91. Statutory Authority: RCW 70.98.050. 81-01-011 (Order 1570), § 402-24-070, filed 12/8/80; Order 1095, § 402-24-070, filed 2/6/76; Order 708, § 402-24-070, filed 8/24/72; Order 1, § 402-24-070, filed 1/8/69; Rules (part), filed 10/26/66.]

WAC 246-221-100 Personnel monitoring for internal dose. (1) Each licensee shall monitor, to determine compliance with WAC 246-221-040, the occupational intake of radioactive material by and assess the committed effective dose equivalent to:

(a) Adults likely to receive, in 1 year, an intake in excess of ten percent of the applicable ALI in Table I, Columns 1 and 2, of WAC 246-221-290;

(b) Minors likely to receive, in one year, a committed effective dose equivalent in excess of 1 mSv (0.1 rem); and

(c) Declared pregnant women likely to receive, during the entire pregnancy, a committed effective dose equivalent in excess of 1 mSv (0.1 rem).

(2) Where necessary or desirable in order to aid in determining the extent of an individual's exposure to concentrations of radioactive material, the department may incorporate license provisions or issue an order requiring a licensee or registrant to make available to the individual appropriate bioassay services and to furnish a copy of the reports of such services to the department.

(3) Each licensee shall maintain records of doses received by all individuals for whom monitoring was required pursuant to subsections (1) and (2) of this section, and records of doses received during planned special exposures, accidents, and emergency conditions. Assessments of dose equivalent and records made using units in effect before January 1, 1994, need not be changed. These records shall include, when applicable:

(a) The estimated intake or body burden of radionuclides;

(b) The committed effective dose equivalent assigned to the intake or body burden of radionuclides;

(c) The specific information used to calculate the committed effective dose equivalent pursuant to WAC 246-221-040;

(d) The total effective dose equivalent when required by WAC 246-221-015; and

(e) The total of the deep dose equivalent and the committed dose to the organ receiving the highest total dose (total organ dose equivalent).

(4) The licensee or registrant shall maintain the records specified in subsection (3) of this section on department Form RHF-5A, in accordance with the instructions provided on the form, or in clear and legible records containing all the information required by Form RHF-5A; and shall update the information at least annually.

[Statutory Authority: RCW 70.98.050. 01-05-110, § 246-221-100, filed 2/21/01, effective 3/24/01; 94-01-073, § 246-221-100, filed 12/9/93, effective 1/9/94. Statutory Authority: RCW 43.70.040. 91-02-049 (Order 121), recodified as § 246-221-100, filed 12/27/90, effective 1/31/91; Order 1095, § 402-24-080, filed 2/6/76; Order 1, § 402-24-080, filed 1/8/69; Rules (part), filed 10/26/66.]

WAC 246-221-102 Control of access to high radiation areas. (1) The licensee or registrant shall ensure that each entrance or access point to a high radiation area has one or more of the following features:

(a) A control device that, upon entry into the area, causes the level of radiation to be reduced below that level at which an individual might receive a deep dose equivalent of 1 mSv (0.1 rem) in one hour at thirty centimeters from the source of radiation or from any surface that the radiation penetrates; or

(b) A control device that energizes a conspicuous visible or audible alarm signal so that the individual entering the high radiation area and the supervisor of the activity are made aware of the entry; or

(c) Entryways that are locked, except during periods when access to the areas is required, with positive control over each individual entry.

(2) In place of the controls required by subsection (1) of this section for a high radiation area, the licensee or registrant may substitute continuous direct or electronic surveillance that is capable of preventing unauthorized entry.

(3) The licensee or registrant may apply to the department for approval of alternative methods for controlling access to high radiation areas.

(4) The licensee or registrant shall establish the controls required by subsections (1) and (3) of this section in a way that does not prevent individuals from leaving a high radiation area.

(5) The licensee is not required to control each entrance or access point to a room or other area that is a high radiation area solely because of the presence of radioactive materials prepared for transport and packaged and labeled in accordance with the regulations of the United States Department of Transportation provided that:

(a) The packages do not remain in the area longer than three days; and

(b) The dose rate at one meter from the external surface of any package does not exceed 0.1 mSv (0.01 rem) per hour.

(6) The licensee is not required to control entrance or access to rooms or other areas in hospitals solely because of the presence of patients containing radioactive material, provided that there are personnel in attendance who are taking the necessary precautions to prevent the exposure of individuals to radiation or radioactive material in excess of the established limits and to operate within the ALARA provisions of the licensee's radiation protection program.

(7) The licensee or registrant is not required to control entrance or access to rooms or other areas as described in this section if the licensee or registrant has met all the specific requirements for access and control specified in other applicable chapters of these regulations, such as, chapter 246-243 WAC for industrial radiography, chapter 246-225 WAC for X rays in the healing arts, and chapter 246-229 WAC for particle accelerators.

[Statutory Authority: RCW 70.98.050. 94-01-073, § 246-221-102, filed 12/9/93, effective 1/9/94.]

WAC 246-221-104 Control of access to very high radiation areas. (1) In addition to the requirements in WAC 246-221-102, the licensee or registrant shall institute additional measures to ensure that an individual is not able to gain unauthorized or inadvertent access to areas in which radiation levels could be encountered at five Gy (500 rad) or more in one hour at one meter from a source of radiation or any surface through which the radiation penetrates. This requirement does not apply to rooms or areas in which diagnostic X-ray systems are the only source of radiation, or to nonself-shielded irradiators.

(2) The licensee or registrant is not required to control entrance or access to rooms or other areas containing sources of radiation capable of producing a very high radiation area as described in this section if the licensee or registrant has met all the specific requirements for access and control specified in other applicable chapters of these regulations, such as, chapter 246-243 WAC for industrial radiography, chapter 246-225 WAC for X rays in the healing arts, and chapter 246-229 WAC for particle accelerators.

[Statutory Authority: RCW 70.98.050. 94-01-073, § 246-221-104, filed 12/9/93, effective 1/9/94.]

WAC 246-221-106 Control of access to very high radiation areas—Irradiators. (1) This section applies to licensees or registrants with sources of radiation in nonself-shielded irradiators. This section does not apply to sources of radiation that are used in teletherapy, in industrial radiography, or in completely self-shielded irradiators in which the source of radiation is both stored and operated within the same shielding radiation barrier and, in the designed configuration of the irradiator, is always physically inaccessible to

any individual and cannot create a radiation level of five Gy (500 rad) or more in one hour at one meter in an area that is accessible to any individual.

(2) Each area in which there may exist radiation levels in excess of five Gy (500 rad) in one hour at one meter from a source of radiation that is used to irradiate materials shall meet the following requirements:

(a) Each entrance or access point shall be equipped with entry control devices which:

(i) Function automatically to prevent any individual from inadvertently entering a very high radiation area; and

(ii) Permit deliberate entry into the area only after a control device is actuated that causes the radiation level within the area, from the source of radiation, to be reduced below that at which it would be possible for an individual to receive a deep dose equivalent in excess of one mSv (0.1 rem) in one hour; and

(iii) Prevent operation of the source of radiation if it would produce radiation levels in the area that could result in a deep dose equivalent to an individual in excess of one mSv (0.1 rem) in one hour.

(b) Additional control devices shall be provided so that, upon failure of the entry control devices to function as required by (a) of this subsection:

(i) The radiation level within the area, from the source of radiation, is reduced below that at which it would be possible for an individual to receive a deep dose equivalent in excess of one mSv (0.1 rem) in one hour; and

(ii) Conspicuous visible and audible alarm signals are generated to make an individual attempting to enter the area aware of the hazard and at least one other authorized individual, who is physically present, familiar with the activity, and prepared to render or summon assistance, aware of the failure of the entry control devices.

(c) The licensee or registrant shall provide control devices so that, upon failure or removal of physical radiation barriers other than the sealed source's shielded storage container:

(i) The radiation level from the source of radiation is reduced below that at which it would be possible for an individual to receive a deep dose equivalent in excess of one mSv (0.1 rem) in one hour; and

(ii) Conspicuous visible and audible alarm signals are generated to make potentially affected individuals aware of the hazard and the licensee or registrant or at least one other individual, who is familiar with the activity and prepared to render or summon assistance, aware of the failure or removal of the physical barrier.

(d) When the shield for stored sealed sources is a liquid, the licensee shall provide means to monitor the integrity of the shield and to signal, automatically, loss of adequate shielding.

(e) Physical radiation barriers that comprise permanent structural components, such as walls, that have no credible probability of failure or removal in ordinary circumstances need not meet the requirements of (c) and (d) of this subsection.

(f) Each area shall be equipped with devices that will automatically generate conspicuous visible and audible alarm signals to alert personnel in the area before the source of radiation can be put into operation and in time for any individual in the area to operate a clearly identified control device, which must be installed in the area and which can prevent the source of radiation from being put into operation.

(g) Each area shall be controlled by use of such administrative procedures and such devices as are necessary to ensure that the area is cleared of personnel prior to each use of the source of radiation.

(h) Each area shall be checked by a radiation measurement to ensure that, prior to the first individual's entry into the area after any use of the source of radiation, the radiation level from the source of radiation in the area is below that at which it would be possible for an individual to receive a deep dose equivalent in excess of one mSv (0.1 rem) in one hour.

(i) Entry and exit portals that are used in transporting materials to and from the irradiation area, and that are not intended for use by individuals, shall be controlled by such devices and administrative procedures as are necessary to physically protect and warn against inadvertent entry by any individual through these portals. Exit portals for irradiated materials shall be equipped to detect and signal the presence of any loose radioactive material that is carried toward such an exit and automatically to prevent loose radioactive material from being carried out of the area.

(3) The entry control devices required in subsection (2)(a) of this section shall be tested for proper functioning:

(a) Prior to initial operation with the source of radiation on any day, unless operations were continued uninterrupted from the previous day; and

(b) Prior to resumption of operation of the source of radiation after any unintentional interruption; and

(c) In accordance with a schedule for periodic tests of the entry control and warning systems submitted by the licensee or registrant and approved by the department.

(4) The licensee or registrant shall not conduct operations, other than those necessary to place the source of radiation in safe condition or to effect repairs on controls, unless control devices are functioning properly.

(5) Licensees, registrants, or applicants for licenses or registrations for sources of radiation within the purview of subsection (2) of this section which will be used in a variety of positions or in locations, such as open fields or forests, that make it impracticable to comply with certain requirements of subsection (2) of this section, such as those for the automatic control of radiation levels, may apply to the department for approval of alternative safety measures. Alternative safety measures shall provide personnel protection at least equivalent to those specified in subsection (2) of this section. At least one of the alternative measures shall include an entry-preventing interlock control based on a measurement of the radiation that ensures the absence of high radiation levels before an individual can gain access to the area where such sources of radiation are used.

(6) The entry control devices required by subsections (2) and (3) of this section shall be established in such a way that no individual will be prevented from leaving the area.

(7) The licensee shall maintain records of tests made pursuant to subsection (3) of this section on entry control devices for very high radiation areas. These records shall include the date, time, and results of each such test of function.

[Statutory Authority: RCW 70.98.050. 94-01-073, § 246-221-106, filed 12/9/93, effective 1/9/94.]

WAC 246-221-110 Surveys. (1) Each licensee or registrant shall make or cause to be made such surveys, as defined in WAC 246-220-010, as may be necessary for the licensee or registrant to establish compliance with these regulations and are reasonable under the circumstances to evaluate the magnitude and extent of radiation levels, concentrations or quantities of radioactive material, and potential radiation hazards. Records of such surveys shall be preserved as specified in WAC 246-221-230. Information on performing surveys may be found in the United States Nuclear Regulatory Commission's Regulatory Guide 8.23.

(2) The licensee shall ensure that instruments and equipment used for quantitative radiation measurements, for example, dose rate and effluent monitoring, are calibrated annually at intervals not to exceed thirteen months for the radiation measured.

[Statutory Authority: RCW 70.98.050. 01-05-110, § 246-221-110, filed 2/21/01, effective 3/24/01; 94-01-073, § 246-221-110, filed 12/9/93, effective 1/9/94. Statutory Authority: RCW 70.98.050 and 70.98.080. 91-15-112 (Order 184), § 246-221-110, filed 7/24/91, effective 8/24/91. Statutory Authority: RCW 43.70.040. 91-02-049 (Order 121), recodified as § 246-221-110, filed 12/27/90, effective 1/31/91. Statutory Authority: RCW 70.98.080. 87-01-031 (Order 2450), § 402-24-085, filed 12/11/86; 83-19-050 (Order 2026), § 402-24-085, filed 9/16/83. Statutory Authority: RCW 70.98.050. 81-01-011 (Order 1570), § 402-24-085, filed 12/8/80; Order 1095, § 402-24-085, filed 2/6/76.]

WAC 246-221-113 Use of process, engineering or other controls. (1) The licensee shall use, to the extent practical, process or other engineering controls, such as, containment, decontamination, or ventilation, to control the concentrations of radioactive material in air.

(2) When it is not practical to apply process or other engineering controls to control the concentrations of radioactive material in air to values below those that define an airborne radioactivity area, the licensee shall, consistent with maintaining the total effective dose equivalent ALARA, increase monitoring and limit intakes by one or more of the following means:

(a) Control of access;

(b) Limitation of exposure times;

(c) Use of respiratory protection equipment; or

(d) Other controls.

(3) If the licensee performs an ALARA analysis to determine whether or not respirators should be used, the licensee may consider safety factors other than radiological factors. The licensee should also consider the impact of respirator use on workers' industrial health and safety.

[Statutory Authority: RCW 70.98.050. 01-05-110, § 246-221-113, filed 2/21/01, effective 3/24/01; 94-01-073, § 246-221-113, filed 12/9/93, effective 1/9/94.]

WAC 246-221-117 Use of individual respiratory protection equipment. If the licensee assigns or permits the use of respiratory protection equipment to limit the intake of radioactive material:

(1) The licensee shall use only respiratory protection equipment that is:

(a) Tested and certified by the National Institute for Occupational Safety and Health (NIOSH); or

(b) Approved by the department on the basis of the licensee's submittal of an application for authorized use of other respiratory protection equipment, including a demonstration by testing, or a demonstration on the basis of reliable test information, that the material and performance characteristics of the equipment are capable of providing the proposed degree of protection under anticipated conditions of use.

(2) The licensee shall implement and maintain a respiratory protection program that includes:

(a) Air sampling sufficient to identify the potential hazard, permit proper equipment selection, and estimate exposures;

(b) Surveys and bioassays, as appropriate, to evaluate actual intakes;

(c) Testing of respirators for operability (user seal check for face sealing devices and functional check for others) immediately prior to each use;

(d) Written procedures regarding:

(i) Monitoring, including air sampling and bioassays;

(ii) Supervision and training of respirator users;

(iii) Fit testing;

(iv) Respirator selection;

(v) Breathing air quality;

(vi) Inventory and control;

(vii) Storage, issuance, maintenance, repair, testing, and quality assurance of respiratory protection equipment;

(viii) Recordkeeping; and

(ix) Limitations on periods of respirator use and relief from respirator use;

(e) Determination by a physician that the individual user is medically fit to use respiratory protection equipment:

(i) Before the initial fitting of a face sealing respirator;

(ii) Before the first field use of nonface sealing respirators; and

(iii) Either every twelve months thereafter, or periodically at a frequency determined by a physician; and

(f) Fit testing, with a fit factor greater than or equal to ten times the APF for negative pressure devices, and a fit factor greater than or equal to five hundred for any positive pressure, continuous flow, and pressure-demand devices, before the first field use of tight fitting, face sealing respirators, and periodically thereafter at a frequency not to exceed one year. Fit testing must be performed with the facepiece operating in the negative pressure mode.

(3) The licensee shall advise each respirator user that the user may leave the area at any time for relief from respirator use in the event of equipment malfunction, physical or psychological distress, procedural or communication failure, significant deterioration of operating conditions, or any other conditions that might require relief.

(4) The licensee shall also consider limitations appropriate to the type and mode of use. When selecting respiratory devices the licensee shall provide for vision correction, adequate communication, low temperature work environments, and the concurrent use of other safety or radiological protection equipment. The licensee shall use equipment in such a way as not to interfere with the proper operation of the respirator.

(5) Standby rescue persons are required whenever one-piece atmosphere-supplying suits, or any combination of supplied air respiratory protection device and personnel protective equipment are used from which an unaided individual would have difficulty extricating himself or herself. The standby persons must be equipped with respiratory protection

devices or other apparatus appropriate for the potential hazards. The standby rescue persons shall observe or otherwise maintain continuous communication with the workers (visual, voice, signal line, telephone, radio, or other suitable means), and be immediately available to assist them in case of a failure of the air supply or for any other reason that requires relief from distress. A sufficient number of standby rescue persons must be immediately available to assist all users of this type of equipment and to provide effective emergency rescue if needed.

(6) Atmosphere-supplying respirators must be supplied with respirable air of grade D quality or better as defined by the Compressed Gas Association in publication G-7.1, "*Commodity Specification for Air*," 1997 and included in the regulations of the Occupational Safety and Health Administration (29 CFR 1910.134 (i)(1)(ii)(A) through (E)). Grade D quality air criteria include:

(a) Oxygen content (v/v) of 19.5-23.5%;

(b) Hydrocarbon (condensed) content of 5 milligrams per cubic meter of air or less;

(c) Carbon monoxide (CO) content of 10 ppm or less;

(d) Carbon dioxide content of 1,000 ppm or less; and

(e) Lack of noticeable odor.

(7) The licensee shall ensure that no objects, materials or substances, such as facial hair, or any conditions that interfere with the face-to-facepiece seal or valve function, and that are under the control of the respirator wearer, are present between the skin of the wearer's face and the sealing surface of a tight-fitting respirator facepiece.

(8) In estimating the dose to individuals from intake of airborne radioactive materials, the concentration of radioactive material in the air that is inhaled when respirators are worn is initially assumed to be the ambient concentration in air without respiratory protection, divided by the assigned protection factor. If the dose is later found to be greater than the estimated dose, the corrected value must be used. If the dose is later found to be less than the estimated dose, the corrected value may be used.

(9) The department may impose restrictions in addition to the provisions of this section, WAC 246-221-113 and 246-221-285, in order to:

(a) Ensure that the respiratory protection program of the licensee is adequate to limit doses to individuals from intakes of airborne radioactive materials consistent with maintaining total effective dose equivalent ALARA; and

(b) Limit the extent to which a licensee may use respiratory protection equipment instead of process or other engineering controls.

(10) The licensee shall obtain authorization from the department before using assigned protection factors in excess of those specified in WAC 246-221-285. The department may authorize a licensee to use higher assigned protection factors on receipt of an application that:

(a) Describes the situation for which a need exists for higher protection factors; and

(b) Demonstrates that the respiratory protection equipment provides these higher protection factors under the proposed conditions of use.

[Statutory Authority: RCW 70.98.050. 01-05-110, § 246-221-117, filed 2/21/01, effective 3/24/01; 98-13-034, § 246-221-117, filed 6/8/98, effective 7/9/98; 94-01-073, § 246-221-117, filed 12/9/93, effective 1/9/94.]

WAC 246-221-120 Caution signs, and labels. (1) The radiation symbol shall be used on all signs, labels, or other written means of warning individuals concerning radiation hazards.

(a) The symbol prescribed by this section is the conventional three-blade design: Radiation symbol

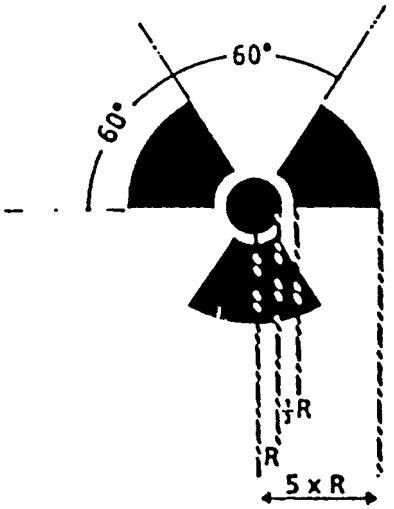

(b) The symbol prescribed by this section shall be:

(i) Magenta, purple, or black on a yellow background; or

(ii) Conspicuously etched or stamped without regard to a color requirement on sources, source holders or device components containing sources which are subjected to extreme environmental conditions which would cause the color to deteriorate.

(2) The conventional radiation symbol as described in subsection (1) of this section shall be used only for:

(a) Instructing individuals to be cognizant of a potential radiation hazard as prescribed in subsections (4) through (10) of this section.

(b) Indicating that information presented pertains to the topic of radiation.

(3) In addition to the contents of signs and labels prescribed in this section, a licensee or registrant may provide on or near such signs and labels any additional information which may be appropriate in aiding individuals to minimize exposure to radiation.

(4) Each *radiation area* and entrance thereto shall be conspicuously posted with a sign or signs bearing the radiation caution symbol and the words: CAUTION* - RADIATION AREA. However, in an exceptionally large room where other activities of a nonradiological nature are conducted the entrance need not be posted provided a conspicuous barricade with an appropriate number of signs is established to delineate the radiation area.

(5) Each high radiation area and all entrances thereto shall be conspicuously posted with a sign or signs bearing the radiation caution symbol and the words: CAUTION* - HIGH RADIATION AREA or DANGER - HIGH RADIATION AREA. To avoid unnecessary exposure, the licensee or registrant may satisfy this requirement by posting the sign at the estimated location or vicinity of the high radiation area.

(6) Each very high radiation area shall be conspicuously posted with a sign or signs bearing the radiation caution sym-

bol and the words: GRAVE DANGER - VERY HIGH RADIATION AREA. To avoid unnecessary exposure, the licensee or registrant may satisfy this requirement by posting the sign at the estimated location or vicinity of the very high radiation area.

(7) Each airborne radioactivity area shall be conspicuously posted with a sign or signs bearing the radiation caution symbol and the words: CAUTION* - AIRBORNE RADIOACTIVITY AREA or DANGER - AIRBORNE RADIOACTIVITY AREA.

(8) Each area or room in which any radioactive material is used or stored in an amount exceeding 10 times the quantity of radioactive material specified in WAC 246-221-300 shall be conspicuously posted with a sign or signs bearing the radiation caution symbol and the words: CAUTION* - RADIOACTIVE MATERIAL or DANGER - RADIOACTIVE MATERIAL.

(9) Each container of radioactive material shall bear a durable, clearly visible label identifying the radioactive contents including:

(a) The radiation caution symbol and the words: CAUTION* - RADIOACTIVE MATERIAL or DANGER - RADIOACTIVE MATERIAL.

(b) Sufficient information to permit individuals handling or using the containers, or working in the vicinity thereof, to take precautions to avoid or minimize exposures, such as radionuclides present, radiation levels, estimate of activity and mass enrichment.

(c) Where containers are used for storage, the quantities and kinds of radioactive materials in the containers and the date of measurement of the quantities.

(10) All radiation machines shall be labeled in a conspicuous manner so as to caution individuals that radiation is produced when the machine is being operated.

[Statutory Authority: RCW 70.98.050. 94-01-073, § 246-221-120, filed 12/9/93, effective 1/9/94. Statutory Authority: RCW 70.98.050 and 70.98.080. 91-15-112 (Order 184), § 246-221-120, filed 7/24/91, effective 8/24/91. Statutory Authority: RCW 43.70.040. 91-02-049 (Order 121), recodified as § 246-221-120, filed 12/27/90, effective 1/31/91. Statutory Authority: RCW 70.98.080. 87-01-031 (Order 2450), § 402-24-090, filed 12/11/86. Statutory Authority: RCW 70.98.050. 81-01-011 (Order 1570), § 402-24-090, filed 12/8/80; Order 1095, § 402-24-090, filed 2/6/76; Order 1, § 402-24-090, filed 1/8/69; Rules (part), filed 10/26/66.]

WAC 246-221-130 Exceptions from posting and labeling requirements. (1) A room or area is not required to be posted with a caution sign because of the presence of a sealed source, provided the radiation level 30 centimeters from the surface of the source container or housing does not exceed 0.05 mSv (five millirem) per hour.

(2) Rooms or other areas in hospitals that are occupied by patients are not required to be posted with caution signs because of the presence of patients containing radioactive material if the patient could be released from licensee control under chapter 246-240 WAC.

(3) Caution signs are not required to be posted in areas or rooms containing radioactive material for periods of less than eight hours if:

(a) The material is constantly attended during those periods by an individual who takes precautions necessary to prevent the exposure of any individual to radiation or radioactive material in excess of the limits established in these rules; and

(b) The area or room is subject to the licensee's or registrant's control.

(4) A room or other area is not required to be posted with a caution sign because of the presence of radioactive material prepared for transport and packaged and labeled in accordance with regulations of the United States Department of Transportation.

(5) A room or area is not required to be posted with a caution sign because of the presence of a diagnostic X-ray system used solely for healing arts purposes.

(6) The interior of a teletherapy room is not required to be posted with caution signs provided the posting is conspicuously placed at the entrance(s) to the rooms.

(7) A licensee is not required to label:

(a) Containers holding licensed material in quantities less than the quantities listed in WAC 246-221-300; or

(b) Containers holding licensed material in concentrations less than those specified in WAC 246-221-290, Table III; or

(c) Containers attended by an individual who takes the precautions necessary to prevent the exposure of any individual to radiation or radioactive material in excess of the limits established by this chapter; or

(d) Containers when they are in transport and packaged and labeled in accordance with the regulations of the United States Department of Transportation; or

(e) Containers such as those located in water-filled canals, storage vaults, or hot cells, that are accessible only to individuals authorized to handle or use them, or to work in the vicinity of the containers, provided the contents are identified to these individuals by a readily available written record. The record shall be retained as long as the containers are in use for the purpose indicated on the record; or

(f) Installed manufacturing or process equipment, such as chemical process equipment, piping, and tanks.

(8) Each licensee, prior to removal or disposal of empty uncontaminated containers to unrestricted areas, shall remove or deface the radioactive material label or otherwise clearly indicate that the container no longer contains radioactive materials.

[Statutory Authority: RCW 70.98.050. 06-05-019, § 246-221-130, filed 2/6/06, effective 3/9/06; 98-13-037, § 246-221-130, filed 6/8/98, effective 7/9/98; 94-01-073, § 246-221-130, filed 12/9/93, effective 1/9/94. Statutory Authority: RCW 70.98.050 and 70.98.080. 91-15-112 (Order 184), § 246-221-130, filed 7/24/91, effective 8/24/91. Statutory Authority: RCW 43.70.040. 91-02-049 (Order 121), recodified as § 246-221-130, filed 12/27/90, effective 1/31/91. Statutory Authority: RCW 70.98.080. 83-19-050 (Order 2026), § 402-24-095, filed 9/16/83. Statutory Authority: RCW 70.98.050. 81-01-011 (Order 1570), § 402-24-095, filed 12/8/80; Order 1095, § 402-24-095, filed 2/6/76.]

WAC 246-221-140 Instruction of personnel. Instructions required for individuals working in or frequenting any portion of a restricted area are specified in WAC 246-222-020, 246-222-030, and 246-222-040.

[Statutory Authority: RCW 70.98.050 and 70.98.080. 91-15-112 (Order 184), § 246-221-140, filed 7/24/91, effective 8/24/91. Statutory Authority: RCW 43.70.040. 91-02-049 (Order 121), recodified as § 246-221-140, filed 12/27/90, effective 1/31/91. Statutory Authority: RCW 70.98.080. 83-19-050 (Order 2026), § 402-24-110, filed 9/16/83; Order 1095, § 402-24-110, filed 2/6/76; Order 708, § 402-24-110, filed 8/24/72; Order 1, § 402-24-110, filed 7/2/71; Order 1, § 402-24-110, filed 1/8/69; Rules (part), filed 10/26/66.]

WAC 246-221-150 Security and control of radioactive material and radiation machines. (1) Licensed radioactive materials and registered radiation machines shall be secured from, or controlled in such a manner so as to prevent, unauthorized access or removal from the place of storage.

(2) Each portable gauge licensee shall use a minimum of two independent physical controls that form tangible barriers to secure portable gauges from unauthorized removal, whenever portable gauges are not under the control and constant surveillance of the licensee.

(3) Licensed radioactive materials in an unrestricted area and not in storage shall be tended under the constant surveillance and immediate control of the licensee.

(4) Registered radiation machines in an unrestricted area and not in storage shall be under the control of the registrant.

[Statutory Authority: RCW 70.98.050. 07-17-028, § 246-221-150, filed 8/7/07, effective 9/7/07; 94-01-073, § 246-221-150, filed 12/9/93, effective 1/9/94. Statutory Authority: RCW 43.70.040. 91-02-049 (Order 121), recodified as § 246-221-150, filed 12/27/90, effective 1/31/91. Statutory Authority: RCW 70.98.080. 83-19-050 (Order 2026), § 402-24-120, filed 9/16/83; Order 1095, § 402-24-120, filed 2/6/76; Order 1, § 402-24-120, filed 1/8/69; Rules (part), filed 10/26/66.]

WAC 246-221-160 Procedures for picking up, receiving, and opening packages. (1)(a) Each licensee who expects to receive a package containing quantities of radioactive material in excess of the Type A_1 or A_2 quantities specified in WAC 246-231-200 shall make arrangements to receive:

(i) The package when it is offered for delivery by the carrier; or

(ii) Immediate notification from the carrier of the arrival of the package at the carrier's terminal.

(b) Each licensee who picks up a package of radioactive material from a carrier's terminal shall pick up the package expeditiously upon receipt of notification from the carrier of its arrival.

(2) Each licensee shall:

(a) Monitor for radioactive contamination the external surfaces of any package labeled with a Radioactive White I, Yellow II or Yellow III label unless the package contains only radioactive material in the form of gas or in special form as defined in WAC 246-231-010; and

(b) Monitor the radiation levels of the external surfaces of any package labeled with a Radioactive White I, Yellow II or Yellow III label unless the package contains quantities of radioactive material that are less than or equal to the Type A quantity, as defined in WAC 246-231-200; and

(c) Monitor all packages known to contain radioactive material for radioactive contamination and radiation levels if the package has evidence of potential contamination, such as packages that are crushed, wet, or damaged.

(3) The monitoring shall be performed:

(a) Immediately upon receipt if there is evidence of package degradation or any other evidence of potential contamination or excessive radiation levels; or

(b) As soon as practicable after receipt, but no later than three hours after the package is received at the licensee's facility if received during the licensee's normal working hours, or no later than three hours from the beginning of the next working day if received after normal working hours.

(4) The licensee shall immediately notify the final delivery carrier and, by telephone and telegram, mailgram, or facsimile, the department when:

(a) For normal shipments, removable radioactive surface contamination exceeds either 22 dpm/cm2 for beta-gamma emitting radionuclides, all radionuclides with half-lives less than ten days, natural uranium, natural thorium, uranium-235, uranium-238, thorium-232, and thorium-228 and thorium 230 when contained in ores or concentrates; or 2.2 dpm/cm2 for all other alpha emitting radionuclides; or

(b) For exclusive use shipments, removable radioactive surface contamination exceeds either 220 dpm/cm2 for beta-gamma emitting radionuclides, all radionuclides with half-lives less than ten days, natural uranium, natural thorium, uranium-235, uranium-238, thorium-232, and thorium-228 and thorium 230 when contained in ores or concentrates; or 22 dpm/cm2 for all other alpha emitting radionuclides; or

(c) For normal or exclusive use shipments, external radiation levels exceed two mSv/hour (200 millirem per hour) at any point on the external surface of the package; or

(d) For exclusive use shipments where the shipment is made in a closed transport vehicle, packages are secured in a fixed position, and no loading or unloading occurs between the beginning and end of transportation, external radiation levels exceed ten mSv/hour (1000 millirem per hour) at any point on the external surface of the package.

(5) Each licensee shall establish and maintain procedures for safely opening packages in which radioactive material is received, and shall assure that such procedures are followed and that due consideration is given to instructions for the type of package being opened and the monitoring of potentially contaminated packaging material (including packages containing radioactive material in gaseous form) to assure that only background levels of radiation are present prior to disposal of such material as nonradioactive waste.

(6) Licensees transferring special form sources to and from a work site in vehicles owned or operated by the licensee are exempt from the contamination monitoring requirements of subsection (2)(a) of this section but are not exempt from the monitoring requirement in subsection (2)(b) of this section for measuring radiation levels to ensure that the source is still properly lodged in its shield.

[Statutory Authority: RCW 70.98.050. 99-15-105, § 246-221-160, filed 7/21/99, effective 8/21/99; 94-01-073, § 246-221-160, filed 12/9/93, effective 1/9/94. Statutory Authority: RCW 70.98.050 and 70.98.080. 91-15-112 (Order 184), § 246-221-160, filed 7/24/91, effective 8/24/91. Statutory Authority: RCW 43.70.040. 91-02-049 (Order 121), recodified as § 246-221-160, filed 12/27/90, effective 1/31/91. Statutory Authority: RCW 70.98.080. 87-01-031 (Order 2450), § 402-24-125, filed 12/11/86; 83-19-050 (Order 2026), § 402-24-125, filed 9/16/83. Statutory Authority: RCW 70.98.050. 81-01-011 (Order 1570), § 402-24-125, filed 12/8/80; Order 1095, § 402-24-125, filed 2/6/76.]

WAC 246-221-170 Waste disposal, general requirement. (1) No licensee shall dispose of any radioactive material except:

(a) By transfer to an authorized recipient as provided in WAC 246-232-080, or chapter 246-249 WAC; or

(b) As authorized pursuant to WAC 246-221-070, 246-221-180, 246-221-190, 246-221-200, 246-221-210, or 246-221-220.

(c) By decay in storage as authorized in a specific license.

(2) A person shall be specifically licensed to receive waste containing licensed material from other persons for:

(a) Treatment prior to disposal; or

(b) Treatment or disposal by incineration; or

(c) Decay in storage; or

(d) Disposal at a land disposal facility licensed pursuant to chapter 246-250 WAC; or

(e) Storage until transferred to a disposal facility authorized to receive the waste.

(3) Nothing in chapter 246-221 WAC relieves the licensee from complying with other applicable federal, state, and local regulations governing any other toxic or hazardous properties of materials that may be disposed pursuant to this chapter.

(4) Each licensee shall maintain records of all transfers and disposals of radioactive material. Requirements for the disposition of certain disposal records, prior to license termination, are located in WAC 246-232-060.

[Statutory Authority: RCW 70.98.050. 99-15-105, § 246-221-170, filed 7/21/99, effective 8/21/99; 94-01-073, § 246-221-170, filed 12/9/93, effective 1/9/94. Statutory Authority: RCW 70.98.050 and 70.98.080. 91-15-112 (Order 184), § 246-221-170, filed 7/24/91, effective 8/24/91. Statutory Authority: RCW 43.70.040. 91-02-049 (Order 121), recodified as § 246-221-170, filed 12/27/90, effective 1/31/91. Statutory Authority: RCW 70.98.050. 81-01-011 (Order 1570), § 402-24-130, filed 12/8/80; Order 1095, § 402-24-130, filed 2/6/76; Order 1, § 402-24-130, filed 1/8/69; Rules (part), filed 10/26/66.]

WAC 246-221-180 Method of obtaining approval of proposed disposal procedures. Any person may apply to the department for approval of proposed procedures to dispose of radioactive material in a manner not otherwise authorized in this chapter. Each application shall contain a description of the radioactive material, including the quantities and kinds of radioactive material and levels of radioactivity involved, the physical and chemical properties that have an impact on risk evaluation, and the proposed manner and conditions of disposal. The application, where appropriate, shall also include an analysis and evaluation of pertinent information as to the nature of the environment, including topographical, geological, meteorological, and hydrological characteristics; usage of ground and surface waters in the general area; the nature and location of other potentially affected facilities; analyses and procedures to ensure that doses are maintained ALARA within the dose limits of this chapter; and procedures to be observed to minimize the risk of unexpected or hazardous exposures.

The department will not approve any application for a license to receive radioactive material from other persons for disposal on land not owned by a state or the federal government.

[Statutory Authority: RCW 70.98.050. 94-01-073, § 246-221-180, filed 12/9/93, effective 1/9/94. Statutory Authority: RCW 43.70.040. 91-02-049 (Order 121), recodified as § 246-221-180, filed 12/27/90, effective 1/31/91. Statutory Authority: RCW 70.98.080. 87-01-031 (Order 2450), § 402-24-135, filed 12/11/86; Order 1095, § 402-24-135, filed 2/6/76.]

WAC 246-221-190 Disposal by release into sanitary sewerage systems. (1) No licensee shall discharge radioactive material into a sanitary sewerage system unless:

(a) It is readily soluble or it is biological material which is readily dispersible in water;

(b) The quantity of any radioactive material released in any one month, if diluted by the average monthly quantity of water released by the licensee, will not result in an average concentration exceeding the limits specified in WAC 246-221-290, Table III; and

(c) The sum of the fractions for each radionuclide, if more than one radionuclide is released, will not exceed unity; where the fraction for each radionuclide is determined by dividing the actual monthly average concentration of each radionuclide released by the licensee into the sewer by the concentration of that radionuclide listed in Table III of WAC 246-221-290; and

(d) The total quantity of licensed and other radioactive material that the licensee releases into the sanitary sewerage system in a year does not exceed 185 GBq (5 Ci) of hydrogen-3, 37 GBq (1 Ci) of carbon-14, and 37 GBq (1 Ci) of all other radioactive materials combined.

(2) Excreta from individuals undergoing medical diagnosis or therapy with radioactive material shall be exempt from any limitations contained in this section.

[Statutory Authority: RCW 70.98.050. 94-01-073, § 246-221-190, filed 12/9/93, effective 1/9/94. Statutory Authority: RCW 70.98.050 and 70.98.080. 91-15-112 (Order 184), § 246-221-190, filed 7/24/91, effective 8/24/91. Statutory Authority: RCW 43.70.040. 91-02-049 (Order 121), recodified as § 246-221-190, filed 12/27/90, effective 1/31/91. Statutory Authority: RCW 70.98.080. 83-19-050 (Order 2026), § 402-24-140, filed 9/16/83. Statutory Authority: RCW 70.98.050. 81-01-011 (Order 1570), § 402-24-140, filed 12/8/80; Order 1095, § 402-24-140, filed 2/6/76; Order 1, § 402-24-140, filed 1/8/69; Rules (part), filed 10/26/66.]

WAC 246-221-200 Disposal by burial in soil. No licensee shall dispose of radioactive material by burial in soil except as specifically approved by the department pursuant to WAC 246-221-180.

[Statutory Authority: RCW 70.98.050 and 70.98.080. 91-15-112 (Order 184), § 246-221-200, filed 7/24/91, effective 8/24/91. Statutory Authority: RCW 43.70.040. 91-02-049 (Order 121), recodified as § 246-221-200, filed 12/27/90, effective 1/31/91. Statutory Authority: RCW 70.98.050. 81-01-011 (Order 1570), § 402-24-150, filed 12/8/80; Order 1095, § 402-24-150, filed 2/6/76; Order 1, § 402-24-150, filed 1/8/69; Rules (part), filed 10/26/66.]

WAC 246-221-210 Disposal by incineration. No licensee shall incinerate radioactive material for the purpose of disposal or preparation for disposal except as specifically approved by the department pursuant to WAC 246-221-070 and 246-221-180.

[Statutory Authority: RCW 70.98.050 and 70.98.080. 91-15-112 (Order 184), § 246-221-210, filed 7/24/91, effective 8/24/91. Statutory Authority: RCW 43.70.040. 91-02-049 (Order 121), recodified as § 246-221-210, filed 12/27/90, effective 1/31/91; Order 1095, § 402-24-160, filed 2/6/76; Order 1, § 402-24-160, filed 1/8/69; Rules (part), filed 10/26/66.]

WAC 246-221-220 Disposal of specific wastes. (1) Any licensee may dispose of the following licensed material without regard to its radioactivity:

(a) 1.85 KBq (0.05 microcuries) or less of hydrogen-3 or carbon-14, per gram of medium, used for liquid scintillation counting; and

(b) 1.85 KBq (0.05 microcuries) or less of hydrogen-3 or carbon-14, per gram of animal tissue averaged over the weight of the entire animal.

(2) The licensee shall not dispose of tissue under this section in a manner that would permit its use either as food for humans or as animal feed; and

(3) Nothing in this section, however, relieves the licensee of maintaining records showing the receipt, transfer and disposal of such byproduct material as specified in WAC 246-220-020; and

(4) Nothing in this section relieves the licensee from complying with other applicable federal, state and local regulations governing any other toxic or hazardous property of these materials.

[Statutory Authority: RCW 70.98.050. 94-01-073, § 246-221-220, filed 12/9/93, effective 1/9/94. Statutory Authority: RCW 70.98.050 and 70.98.-080. 91-15-112 (Order 184), § 246-221-220, filed 7/24/91, effective 8/24/91. Statutory Authority: RCW 43.70.040. 91-02-049 (Order 121), recodified as § 246-221-220, filed 12/27/90, effective 1/31/91. Statutory Authority: RCW 70.98.080. 83-19-050 (Order 2026), § 402-24-165, filed 9/16/83.]

WAC 246-221-230 Records important to radiation safety. (1) Each licensee or registrant shall make and retain records of activities, program reviews, measurements, and calculations which may be necessary to determine the extent of occupational and public exposure from sources of radiation under the control of the licensee or registrant.

(2) Each record required by this section shall be legible throughout the specified retention period.

(3) Each licensee or registrant shall use the SI units: Becquerel, gray, sievert and coulomb per kilogram, or the special units: Curie, rad, rem, and roentgen, including multiples and subdivisions, and shall clearly indicate the units of all quantities on records required by these regulations.

(4) The licensee or registrant shall make a clear distinction among the quantities entered on the records required by these regulations such as, total effective dose equivalent, total organ dose equivalent, shallow dose equivalent, lens dose equivalent, deep dose equivalent, or committed effective dose equivalent.

(5) Records which must be maintained under this part shall be the original or a reproduced copy or microform if such reproduced copy or microform is duly authenticated by authorized personnel and the microform is capable of producing a clear and legible copy after storage for the period specified by department regulations. The record may also be stored in electronic media with the capability for producing legible, accurate, and complete records during the required retention period. Electronic media data storage systems shall incorporate standard or universally recognized security measures. Records, such as letters, drawings, and specifications, shall include all pertinent information, such as stamps, initials, and signatures.

(6) The licensee shall maintain adequate safeguards against tampering with and loss of records.

(7) The licensee or registrant shall retain the following required records until the department terminates each pertinent license or registration requiring the record, and upon termination of the license or registration, the licensee or registrant shall store for at least thirty years:

(a) Records of prior occupational dose and exposure history as recorded on department Form RHF-4 or RHF-4A, or equivalent;

(b) Records on department Form RHF-5 or RHF-5A, or equivalent, of doses received by all individuals for whom monitoring was required pursuant to WAC 246-221-090 and 246-221-100;

(c) Records of doses received during planned special exposures, accidents, and emergency conditions;

(d) The specific information used to calculate the committed effective dose equivalent pursuant to WAC 246-221-040(3);

(e) Records of the results of surveys to determine the dose from external sources of radiation used, in the absence of or in combination with individual monitoring data, in the assessment of individual dose equivalents;

(f) Records of the results of measurements and calculations used to determine individual intakes of radioactive material and used in the assessment of internal dose;

(g) Records showing the results of air sampling, surveys, and bioassays required pursuant to WAC 246-221-117 (1)(b)(i) and (ii);

(h) Records of the results of measurements and calculations used to evaluate the release of radioactive effluents to the environment.

(8) The licensee or registrant shall retain the following records until the department terminates the pertinent license or registration requiring the record:

(a) Records of waste disposal made under the provisions of WAC 246-221-180, 246-221-190, 246-221-210 and 246-221-220, chapter 246-249 WAC, and any burials in soil as previously authorized;

(b) Records of dose to individual members of the public as required by WAC 246-221-060(4);

(c) Records of the provisions of the radiation protection program as required by WAC 246-221-005.

(9) The licensee or registrant shall retain the following records for three years after the record is made:

(a) Records of testing entry control devices for very high radiation areas as required by WAC 246-221-106(3);

(b) Records used in preparing department Form RHF-4 or RHF-4A;

(c) Records showing the results of general surveys required by WAC 246-221-110 and package surveys required by WAC 246-221-160;

(d) Records of calibrations required by WAC 246-221-110;

(e) Records of program audits and other reviews of the content and implementation of the radiation protection program required by WAC 246-221-005;

(f) Records of waste disposal by decay in storage.

(10) If there is a conflict between the department's regulations in this part, license condition, or other written department approval or authorization pertaining to the retention period for the same type of record, the retention period specified in the regulations in this part for such records shall apply unless the department, under WAC 246-220-050, has granted a specific exemption from the record retention requirements specified in the regulations in this part.

(11) The discontinuance or curtailment of activities does not relieve the licensee or registrant of responsibility for retaining all records required by this section.

[Statutory Authority: RCW 70.98.050. 01-05-110, § 246-221-230, filed 2/21/01, effective 3/24/01; 94-01-073, § 246-221-230, filed 12/9/93, effective 1/9/94. Statutory Authority: RCW 70.98.050 and 70.98.080. 91-15-112 (Order 184), § 246-221-230, filed 7/24/91, effective 8/24/91. Statutory Authority: RCW 43.70.040. 91-02-049 (Order 121), recodified as § 246-221-230, filed 12/27/90, effective 1/31/91. Statutory Authority: RCW 70.98.080. 87-01-031 (Order 2450), § 402-24-170, filed 12/11/86; 83-19-050 (Order 2026), § 402-24-170, filed 9/16/83. Statutory Authority: RCW 70.98.050. 81-01-011 (Order 1570), § 402-24-170, filed 12/8/80; Order 1095, § 402-24-170, filed 2/6/76; Order 708, § 402-24-170, filed 8/24/72; Order 1, § 402-24-170, filed 7/2/71; Order 1, § 402-24-170, filed 1/8/69; Rules (part), filed 10/26/66.]

WAC 246-221-240 Reports of stolen, lost or missing radiation sources. (1) Each licensee and/or registrant shall report by telephone (206/682-5327) and confirm promptly by letter, telegram, mailgram, or facsimile to the State Department of Health, Division of Radiation Protection, P.O. Box 47827, Olympia, Washington 98504-7827.

(a) Immediately after its occurrence becomes known to the licensee, stolen, lost, or missing radioactive material in an aggregate quantity equal to or greater than one thousand times the quantity specified in WAC 246-221-300; or

(b) Within thirty days after its occurrence becomes known to the licensee, lost, stolen, or missing radioactive material in an aggregate quantity greater than ten times the quantity specified in Appendix C that is still missing or any item not exempted in chapter 246-232 WAC; or

(c) Immediately after its occurrence becomes known to the registrant, a stolen, lost, or missing radiation machine.

(2) Each licensee or registrant required to make a report pursuant to subsection (1) of this section shall, within thirty days after making the telephone report, make a written report to the department setting forth the following information:

(a) A description of the licensed or registered source of radiation involved, including, for radioactive material, the kind, quantity, and chemical and physical form; and, for radiation machines, the manufacturer, model and serial number, type and maximum energy of radiation emitted; and

(b) A description of the circumstances under which the loss or theft occurred; and

(c) A statement of disposition, or probable disposition, of the licensed or registered source of radiation involved; and

(d) Exposures of individuals to radiation, circumstances under which the exposures occurred, and the possible total effective dose equivalent to persons in unrestricted areas; and

(e) Actions that have been taken, or will be taken, to recover the source of radiation; and

(f) Procedures or measures that have been, or will be, adopted to ensure against a recurrence of the loss or theft of licensed or registered sources of radiation.

(3) Subsequent to filing the written report, the licensee or registrant shall also report additional substantive information on the loss or theft within thirty days after the licensee or registrant learns of such information.

(4) The licensee or registrant shall prepare any report filed with the department pursuant to this section so that names of individuals who may have received exposure to radiation are stated in a separate and detachable portion of the report.

[Statutory Authority: RCW 70.98.050. 94-01-073, § 246-221-240, filed 12/9/93, effective 1/9/94. Statutory Authority: RCW 70.98.050 and 70.98.080. 91-15-112 (Order 184), § 246-221-240, filed 7/24/91, effective 8/24/91. Statutory Authority: RCW 43.70.040. 91-02-049 (Order 121), recodified as § 246-221-240, filed 12/27/90, effective 1/31/91. Statutory Authority: RCW 70.98.080. 87-01-031 (Order 2450), § 402-24-180, filed 12/11/86; 83-19-050 (Order 2026), § 402-24-180, filed 9/16/83. Statutory Authority: RCW 70.98.050. 81-01-011 (Order 1570), § 402-24-180, filed 12/8/80; Order 1095, § 402-24-180, filed 2/6/76; Order 708, § 402-24-180, filed 8/24/72; Order 1, § 402-24-180, filed 7/2/71; Order 1, § 402-24-180, filed 1/8/69; Rules (part), filed 10/26/66.]

WAC 246-221-250 Notification of incidents. (1) **Immediate notification.** Notwithstanding other requirements for notification, each licensee and/or registrant shall immediately (as soon as possible but no later than four hours after discovery of an incident) notify the State Department of Health, Division of Radiation Protection, P.O. Box 47827, Olympia, Washington 98504-7827, by telephone (206/682-5327) and confirming letter, telegram, mailgram, or facsimile of any incident involving any radiation source which may have caused or threatens to cause:

(a) An individual to receive:

(i) A total effective dose equivalent of 0.25 Sv (25 rem) or more;

(ii) A lens dose equivalent of 0.75 Sv (75 rem) or more; or

(iii) A shallow dose equivalent to the skin or extremities or a total organ dose equivalent of 2.5 Sv (250 rem) or more;

(b) The release of radioactive material, inside or outside of a restricted area, so that, had an individual been present for twenty-four hours, the individual could have received an intake five times the occupational ALI. This provision does not apply to locations where personnel are not normally stationed during routine operations, such as hot-cells or process enclosures; or

(c) The loss of ability to take immediate protective actions necessary to avoid exposure to sources of radiation or releases of radioactive material that could exceed regulatory limits. Events which could cause such a loss of ability include fires, explosions, toxic gas releases, etc.

(2) **Twenty-four hour notification.** Each licensee and/or registrant shall within twenty-four hours of discovery of the event, notify the State Department of Health, Division of Radiation Protection, P.O. Box 47827, Olympia, Washington 98504-7827, by telephone (206/682-5327) and confirming letter, telegram, mailgram, or facsimile of any incident involving any radiation source possessed which may have caused or threatens to cause:

(a) An individual to receive, in a period of twenty-four hours:

(i) A total effective dose equivalent exceeding 0.05 Sv (5 rem);

(ii) A lens dose equivalent exceeding 0.15 Sv (15 rem); or

(iii) A shallow dose equivalent to the skin or extremities or a total organ dose equivalent exceeding 0.5 Sv (50 rem);

(b) The release of radioactive material, inside or outside of a restricted area, so that, had an individual been present for twenty-four hours, the individual could have received an intake in excess of one occupational ALI. This provision does not apply to locations where personnel are not normally sta-

tioned during routine operations, such as hot-cells or process enclosures;

(c) An unplanned contamination incident that:

(i) Requires access to the contaminated area, by workers or the general public, to be restricted for more than twenty-four hours by imposing additional radiological controls or by prohibiting entry into the area;

(ii) Involves a quantity of material greater than five times the lowest annual limit on intake specified in WAC 246-221-290; and

(iii) Has access to the area restricted for a reason other than to allow radionuclides with a half-life of less than twenty-four hours to decay prior to decontamination;

(d) Equipment failure or inability to function as designed when:

(i) The equipment is required by regulation or license condition to prevent releases exceeding regulatory limits, to prevent exposures to radiation and radioactive material exceeding regulatory limits or to mitigate the consequences of an accident;

(ii) The equipment is required to be available and operable at the time it becomes disabled or fails to function; and

(iii) No redundant equipment is available and operable to perform the required safety functions;

(e) An unplanned medical treatment at a medical facility of an individual with spreadable radioactive contamination on the individual's clothing or body; or

(f) An unplanned fire or explosion damaging any radioactive material or any device, container or equipment containing radioactive material when:

(i) The quantity of radioactive material involved is greater than five times the lowest annual limit on intake specified in WAC 246-221-290; and

(ii) The damage affects the integrity of the radioactive material or its container.

(3) For each occurrence requiring notification pursuant to this section, a prompt investigation of the situation shall be initiated by the licensee/registrant. A written report of the findings of the investigation shall be sent to the department within thirty days.

(4) The licensee or registrant shall prepare each report filed with the department under this section so that names of individuals who have received exposure to sources of radiation are stated in a separate and detachable portion of the report.

Any report filed with the department under this section shall contain the information described in WAC 246-221-260 (2) and (3).

(5) The provisions of this section do not apply to doses that result from planned special exposures, provided such doses are within the limits for planned special exposures and are reported pursuant to WAC 246-221-265.

(6) Telephone notifications that do not involve immediate or twenty-four hour notification should be made to the Olympia office (360 236-3300).

(7) Telephone notification required under this section shall include, to the extent that the information is available at the time of notification:

(a) The caller's name and call-back telephone number;

(b) A description of the incident including date and time;

(c) The exact location of the incident;

(d) The radionuclides, quantities, and chemical and physical forms of the radioactive materials involved; and

(e) Any personnel radiation exposure data available.

[Statutory Authority: RCW 70.98.050. 01-05-110, § 246-221-250, filed 2/21/01, effective 3/24/01; 98-13-037, § 246-221-250, filed 6/8/98, effective 7/9/98; 95-01-108, § 246-221-250, filed 12/21/94, effective 1/21/95; 94-01-073, § 246-221-250, filed 12/9/93, effective 1/9/94. Statutory Authority: RCW 70.98.050 and 70.98.080. 91-15-112 (Order 184), § 246-221-250, filed 7/24/91, effective 8/24/91. Statutory Authority: RCW 43.70.040. 91-02-049 (Order 121), recodified as § 246-221-250, filed 12/27/90, effective 1/31/91. Statutory Authority: RCW 70.98.080. 87-01-031 (Order 2450), § 402-24-190, filed 12/11/86; 83-19-050 (Order 2026), § 402-24-190, filed 9/16/83. Statutory Authority: RCW 70.98.050. 81-01-011 (Order 1570), § 402-24-190, filed 12/8/80; Order 1095, § 402-24-190, filed 2/6/76; Order 708, § 402-24-190, filed 8/24/72; Order 1, § 402-24-190, filed 7/2/71; Order 1, § 402-24-190, filed 1/8/69; Rules (part), filed 10/26/66.]

WAC 246-221-260 Reports of overexposures and excessive levels and concentrations. (1) In addition to any notification required by WAC 246-221-250, each licensee or registrant shall submit a written report to the department within thirty days after learning of any of the following occurrences:

(a) Incidents for which notification is required by WAC 246-221-250; or

(b) Doses in excess of any of the following:

(i) The occupational dose limits for adults in WAC 246-221-010; or

(ii) The occupational dose limits for a minor in WAC 246-221-050; or

(iii) The limits for an embryo/fetus of a declared pregnant woman in WAC 246-221-055; or

(iv) The limits for an individual member of the public in WAC 246-221-060; or

(v) Any applicable limit in the license; or

(vi) The ALARA constraints for air emissions established under WAC 246-221-005; or

(c) Levels of radiation or concentrations of radioactive material in:

(i) A restricted area in excess of applicable limits in the license; or

(ii) An unrestricted area in excess of ten times the applicable limit set forth in this chapter or in the license or registration, whether or not involving exposure of any individual in excess of the limits in WAC 246-221-060; or

(d) For source materials milling licensees and nuclear power plants subject to the provisions of United States Environmental Protection Agency's generally applicable environmental radiation standards in 40 CFR 190, levels of radiation or releases of radioactive material in excess of those standards, or of license conditions related to those standards.

(2) Each report required by subsection (1) of this section shall describe:

(a) The incident and its exact location, time and date;

(b) The extent of exposure of individuals to radiation or to radioactive material, including estimates of each individual's dose as required by subsection (3) of this section;

(c) Levels of radiation and concentrations of radioactive material involved, including the radionuclides, quantities, and chemical and physical form;

(d) The cause or probable cause of the exposure, levels of radiation or concentrations;

(e) The manufacturer and model number (if applicable) of any equipment that failed or malfunctioned;

(f) The results of any evaluations or assessments; and

(g) Corrective steps taken or planned to assure against a recurrence, including the schedule for achieving conformance with applicable limits, ALARA constraints, generally applicable environmental standards, and associated license conditions.

(3) Each report filed with the department pursuant to this section shall include for each individual exposed the name, social security number, and date of birth, and an estimate of the individual's dose. With respect to the limit for the embryo/fetus in WAC 246-221-055, the identifiers should be those of the declared pregnant woman. The report shall be prepared so that this information is stated in a separate and detachable part of the report.

(4) Individuals shall be notified of reports in accordance with the requirements of WAC 246-222-040.

[Statutory Authority: RCW 70.98.050. 99-15-105, § 246-221-260, filed 7/21/99, effective 8/21/99; 95-01-108, § 246-221-260, filed 12/21/94, effective 1/21/95; 94-01-073, § 246-221-260, filed 12/9/93, effective 1/9/94. Statutory Authority: RCW 70.98.050 and 70.98.080. 91-15-112 (Order 184), § 246-221-260, filed 7/24/91, effective 8/24/91. Statutory Authority: RCW 43.70.040. 91-02-049 (Order 121), recodified as § 246-221-260, filed 12/27/90, effective 1/31/91. Statutory Authority: RCW 70.98.050. 81-01-011 (Order 1570), § 402-24-200, filed 12/8/80; Order 1095, § 402-24-200, filed 2/6/76; Order 708, § 402-24-200, filed 8/24/72; Order 1, § 402-24-200, filed 7/2/71; Order 1, § 402-24-200, filed 1/8/69; Rules (part), filed 10/26/66.]

WAC 246-221-265 Special reports to the department—Planned special exposures and leaking sources. (1) The licensee or registrant shall submit a written report to the department within thirty days following any planned special exposure conducted in accordance with WAC 246-221-030. The written report shall:

(a) Inform the department that a planned special exposure was conducted;

(b) Indicate the date the planned special exposure occurred; and

(c) Provide the information required by WAC 246-221-030.

(2) The licensee shall file a written report with the department within five days after learning that a sealed source is leaking or contaminated. The report shall describe:

(a) The source;

(b) The source holder;

(c) The equipment in which the source is installed;

(d) The test results; and

(e) The corrective action taken.

[Statutory Authority: RCW 70.98.050. 99-05-013, § 246-221-265, filed 2/5/99, effective 3/8/99; 94-01-073, § 246-221-265, filed 12/9/93, effective 1/9/94.]

WAC 246-221-270 Vacating premises and release of equipment. (1) Each specific licensee shall notify the department in writing of intent to vacate, at least thirty days before vacating or relinquishing possession or control of premises which may have been contaminated with radioactive material as a result of licensed activities.

(2) Each licensee shall permanently decontaminate the premise, before vacating any premise or transferring the premise, in accordance with the standards specified in chapter 246-246 WAC. A survey by the licensee shall be made after the decontamination and the department and the landlord or subsequent tenant or transferee shall be provided with a copy of the survey no later than the date of vacating or relinquishing possession or control of the premise.

(3) No machinery, instruments, laboratory equipment or any other property used in contact with, or close proximity to radioactive material at a licensed premise shall be assigned, sold, leased, or transferred to an unlicensed person unless the property has been decontaminated and meets the standards specified in WAC 246-232-140. A survey shall be made after the decontamination and the department and subsequent owner or transferee shall be provided with a copy of the survey report.

[Statutory Authority: RCW 70.98.050. 00-07-085, § 246-221-270, filed 3/15/00, effective 4/15/00; 94-01-073, § 246-221-270, filed 12/9/93, effective 1/9/94. Statutory Authority: RCW 43.70.040. 91-02-049 (Order 121), recodified as § 246-221-270, filed 12/27/90, effective 1/31/91; Order 1095, § 402-24-210, filed 2/6/76; Order 1, § 402-24-210, filed 1/8/69; Rules (part), filed 10/26/66.]

WAC 246-221-275 Notification of changes in a facility. Each licensee or registrant shall notify the department of changes in any room or area in a facility where a source of radiation is used. Changes of interest to the department include, but are not limited to, new or replacement equipment containing or emitting radiation, increased occupancy, repair or replacement of existing shielding, new shielding, alteration of the ventilation system, and changes in procedures done in the room or area.

[Statutory Authority: RCW 70.98.050. 94-01-073, § 246-221-275, filed 12/9/93, effective 1/9/94.]

WAC 246-221-280 Notifications and reports to individuals. (1) Requirements for notification and reports to individuals of exposure to radiation or radioactive material are specified in WAC 246-222-040.

(2) When a licensee or registrant is required pursuant to WAC 246-221-260 to report to the department any exposure of an identified occupationally exposed individual, or an identified member of the public, or dosimetry device assigned to any individual to radiation from any source, the licensee or registrant shall also notify the individual. Such notice shall be transmitted at a time not later than the transmittal to the department, and shall comply with the provisions of WAC 246-222-040(1).

[Statutory Authority: RCW 70.98.050. 99-05-012, § 246-221-280, filed 2/5/99, effective 3/8/99. Statutory Authority: RCW 70.98.050 and 70.98.080. 91-15-112 (Order 184), § 246-221-280, filed 7/24/91, effective 8/24/91. Statutory Authority: RCW 43.70.040. 91-02-049 (Order 121), recodified as § 246-221-280, filed 12/27/90, effective 1/31/91. Statutory Authority: RCW 70.98.080. 87-01-031 (Order 2450), § 402-24-215, filed 12/11/86; Order 1095, § 402-24-215, filed 2/6/76.]

WAC 246-221-285 Assigned protection factors for respirators. [a]

		Operating mode	Assigned Protection Factors
I.	Air-Purifying Respirators (Particulate [b] only) [c]:		
	Filtering facepiece disposable [d]	Negative Pressure.	([d])
	Facepiece, half [e].	Negative Pressure.	10
	Facepiece, full.	Negative Pressure.	100
	Facepiece, half.	Powered air-purifying respirators	50
	Facepiece, full.	Powered air-purifying respirators	1000
	Helmet/hood.	Powered air-purifying respirators	1000
	Facepiece, loose-fitting.	Powered air-purifying respirators	25
II.	Atmosphere-Supplying Respirators (Particulate, gases and vapors [f]):		
	1. Air-line respirator:		
	Facepiece, half.	Demand.	10
	Facepiece, half.	Continuous Flow.	50
	Facepiece, half.	Pressure Demand.	50
	Facepiece, full.	Demand.	100
	Facepiece, full.	Continuous Flow.	1000
	Facepiece, full.	Pressure Demand.	1000
	Helmet/hood.	Continuous Flow.	1000
	Facepiece, loose-fitting.	Continuous Flow.	25
	Suit.	Continuous Flow.	([g])
	2. Self-contained breathing apparatus (SCBA):		
	Facepiece, full.	Demand.	[h]100
	Facepiece, full.	Pressure Demand.	[i]10,000
	Facepiece, full.	Demand, Recirculating.	[h]100
	Facepiece, full.	Positive Pressure Recirculating. . . .	[i]10,000
III.	Combination Respirators:		
	Any combination of air-purifying and atmosphere-supplying respirators.	Assigned protection factor for type and mode of operation as listed above.	

[a] These assigned protection factors apply only in a respiratory protection program that meets the requirements of this chapter. They are applicable only to airborne radiological hazards and may not be appropriate to circumstances when chemical or other respiratory hazards exist instead of, or in addition to, radioactive hazards. Selection and use of respirators for these circumstances must also comply with Department of Labor regulations.

Radioactive contaminants for which the concentration values in Table 1, Column 3 of WAC 246-221-290, Appendix A, are based on internal dose due to inhalation may, in addition, present external exposure hazards at higher concentrations. Under these circumstances, limitations on occupancy may have to be governed by external dose limits.

[b] Air-purifying respirators with APF <100 must be equipped with particulate filters that are at least 95 percent efficient. Air-purifying respirators with APF = 100 must be equipped with particulate filters that are at least 99 percent efficient. Air-purifying respirators with APFs >100 must be equipped with particulate filters that are at least 99.97 percent efficient.

[c] The licensee may apply to the department for the use of an APF greater than 1 for sorbent cartridges as protection against airborne radioactive gases and vapors (e.g., radioiodine).

[d] Licensees may permit individuals to use this type of respirator who have not been medically screened or fit tested on the device provided that no credit be taken for their use in estimating intake or dose. It is also recognized that it is difficult to perform an effective positive or negative pressure preuse user seal check on this type of device. All other respiratory protection program requirements listed in WAC 246-221-117 apply. An assigned protection factor has not been assigned for these devices. However, an APF equal to 10 may be used if the licensee can demonstrate a fit factor of at least 100 by use of a validated or evaluated, qualitative or quantitative fit test.

[e] Under-chin type only. No distinction is made in this section between elastomeric half-masks with replaceable cartridges and those designed with the filter medium as an integral part of the facepiece (e.g., disposable or reusable disposable). Both types are acceptable so long as the seal area of the latter contains some substantial type of seal-enhancing material such as rubber or plastic, the two or more suspension straps are adjustable, the filter medium is at least 95 percent efficient and all other requirements of this part are met.

[f] The assigned protection factors for gases and vapors are not applicable to radioactive contaminants that present an absorption or submersion hazard. For tritium oxide vapor, approximately one-third of the intake occurs by absorption through the skin so that an overall protection factor of 3 is appropriate when atmosphere-supplying respirators are used to protect against tritium oxide. Exposure to radioactive noble gases is not considered a significant respiratory hazard, and protective actions for these contaminants should be based on external (submersion) dose considerations.

[g] No NIOSH approval schedule is currently available for atmosphere-supplying suits. This equipment may be used in an acceptable respiratory protection program as long as all the other minimum program requirements, with the exception of fit testing, are met (i.e., WAC 246-221-117).

[h] The licensee should implement institutional controls to assure that these devices are not used in areas immediately dangerous to life or health (IDLH).

[i] This type of respirator may be used as an emergency device in unknown concentrations for protection against inhalation hazards. External radiation hazards and other limitations to permitted exposure such as skin absorption shall be taken into account in these circumstances. This device may not be used by any individual who experiences perceptible outward leakage of breathing gas while wearing the device.

[Statutory Authority: RCW 70.98.050. 01-05-110, § 246-221-285, filed 2/21/01, effective 3/24/01; 94-01-073, § 246-221-285, filed 12/9/93, effective 1/9/94.]

WAC 246-221-290 Appendix A—Annual limits on intake (ALI) and derived air concentrations (DAC) of radionuclides for occupational exposure; effluent concen-

trations; concentrations for release to sanitary sewerage. For each radionuclide, Table I indicates the chemical form which is to be used for selecting the appropriate ALI or DAC value. The ALIs and DACs for inhalation are given for an aerosol with an activity median aerodynamic diameter (AMAD) of 1 μm (micron) and for three classes (D,W,Y) of radioactive material, which refer to their retention (approximately days, weeks or years) in the pulmonary region of the lung. This classification applies to a range of clearance half-times for D if less than ten days, for W from ten to one hundred days, and for Y greater than one hundred days. Table II provides concentration limits for airborne and liquid effluents released to the general environment. Table III provides concentration limits for discharges to sanitary sewerage.

Note: The values in Tables I, II, and III are presented in the computer "E" notation. In this notation a value of 6E-02 represents a value of 6×10^{-2} or 0.06, 6E+2 represents $6 \times 1O^{2}$ or 600, and 6E+0 represents 6×10^{0} or 6.

Table I "Occupational Values"

Note that the columns in Table I of this appendix captioned "Oral Ingestion ALI," "Inhalation ALI," and "DAC," are applicable to occupational exposure to radioactive material.

The ALIs in this appendix are the annual intakes of given radionuclide by "Reference Man" which would result in either: A committed effective dose equivalent of 0.05 Sv (5 rem), stochastic ALI; or a committed dose equivalent of 0.5 Sv (50 rem) to an organ or tissue, nonstochastic ALI. The stochastic ALIs were derived to result in a risk, due to irradiation of organs and tissues, comparable to the risk associated with deep dose equivalent to the whole body of 0.05 Sv (5 rem). The derivation includes multiplying the committed dose equivalent to an organ or tissue by a weighting factor, w_T. This weighting factor is the proportion of the risk of stochastic effects resulting from irradiation of the organ or tissue, T, to the total risk of stochastic effects when the whole body is irradiated uniformly. The values of w_T are listed under the definition of weighting factor in WAC 246-221-005. The nonstochastic ALIs were derived to avoid nonstochastic effects, such as prompt damage to tissue or reduction in organ function.

A value of $w_T = 0.06$ is applicable to each of the five organs or tissues in the "remainder" category receiving the highest dose equivalents, and the dose equivalents of all other remaining tissues may be disregarded. The following portions of the GI tract — stomach, small intestine, upper large intestine, and lower large intestine — are to be treated as four separate organs.

Note that the dose equivalents for an extremity, elbows, arms below the elbows, feet and lower legs, knees, and legs below the knees, skin, and lens of the eye are not considered in computing the committed effective dose equivalent, but are subject to limits that must be met separately.

When an ALI is defined by the stochastic dose limit, this value alone is given. When an ALI is determined by the nonstochastic dose limit to an organ, the organ or tissue to which the limit applies is shown, and the ALI for the stochastic limit is shown in parentheses. Abbreviated organ or tissue designations are used:

LLI wall	=	lower large intestine wall;
St. wall	=	stomach wall;
Blad wall	=	bladder wall; and
Bone surf	=	bone surface.

The use of the ALIs listed first, the more limiting of the stochastic and nonstochastic ALIs, will ensure that nonstochastic effects are avoided and that the risk of stochastic effects is limited to an acceptably low value. If, in a particular situation involving a radionuclide for which the nonstochastic ALI is limiting, use of that nonstochastic ALI is considered unduly conservative, the licensee may use the stochastic ALI to determine the committed effective dose equivalent. However, the licensee shall also ensure that the 0.5 Sv (50 rem) dose equivalent limit for any organ or tissue is not exceeded by the sum of the external deep dose equivalent plus the internal committed dose equivalent to that organ, not the effective dose. For the case where there is no external dose contribution, this would be demonstrated if the sum of the fractions of the nonstochastic ALIs (ALI_{ns}) that contribute to the committed dose equivalent to the organ receiving the highest dose does not exceed unity, that is, $\sum$ (intake (in μCi) of each radionuclide/ALI_{ns}) ≤ 1.0. If there is an external deep dose equivalent contribution of H_d, then this sum must be less than $1 - (H_d/50)$, instead of ≤ 1.0.

The derived air concentration (DAC) values are derived limits intended to control chronic occupational exposures. The relationship between the DAC and the ALI is given by:

DAC = ALI (in μCi)/(2000 hours per working year x 60 minutes/hour x 2×10^4 ml per minute) = [ALI/2.4×10^9] μCi/ml,
where 2×10^4 ml per minute is the volume of air breathed per minute at work by Reference Man under working conditions of light work.

The DAC values relate to one of two modes of exposure: Either external submersion or the internal committed dose equivalents resulting from inhalation of radioactive materials. DACs based upon submersion are for immersion in a semi-infinite cloud of uniform concentration and apply to each radionuclide separately.

The ALI and DAC values include contributions to exposure by the single radionuclide named and any in-growth of daughter radionuclides produced in the body by decay of the parent. However, intakes that include both the parent and daughter radionuclides should be treated by the general method appropriate for mixtures.

The values of ALI and DAC do not apply directly when the individual both ingests and inhales a radionuclide, when the individual is exposed to a mixture of radionuclides by either inhalation or ingestion or both, or when the individual is exposed to both internal and external irradiation. See WAC 246-221-015. When an individual is exposed to radioactive materials which fall under several of the translocation classifications of the same radionuclide, such as, Class D, Class W,

or Class Y, the exposure may be evaluated as if it were a mixture of different radionuclides.

It should be noted that the classification of a compound as Class D, W, or Y is based on the chemical form of the compound and does not take into account the radiological half-life of different radionuclides. For this reason, values are given for Class D, W, and Y compounds, even for very short-lived radionuclides.

Table II "Effluent Concentrations"

The columns in Table II of this appendix captioned "Effluents," "Air" and "Water" are applicable to the assessment and control of dose to the public, particularly in the implementation of the provisions of WAC 246-221-070. The concentration values given in Columns 1 and 2 of Table II are equivalent to the radionuclide concentrations which, if inhaled or ingested continuously over the course of a year, would produce a total effective dose equivalent of 0.50 mSv (0.05 rem).

Consideration of nonstochastic limits has not been included in deriving the air and water effluent concentration limits because nonstochastic effects are presumed not to occur at or below the dose levels established for individual members of the public. For radionuclides, where the nonstochastic limit was governing in deriving the occupational DAC, the stochastic ALI was used in deriving the corresponding airborne effluent limit in Table II. For this reason, the DAC and airborne effluent limits are not always proportional as was the case in the previous Appendix A of this chapter.

The air concentration values listed in Table II, Column 1 were derived by one of two methods. For those radionuclides for which the stochastic limit is governing, the occupational stochastic inhalation ALI was divided by 2.4×10^9, relating the inhalation ALI to the DAC, as explained above, and then divided by a factor of three hundred. The factor of three hundred includes the following components: A factor of fifty to relate the 0.05 Sv (5 rem) annual occupational dose limit to the 1 mSv (0.1 rem) limit for members of the public, a factor of three to adjust for the difference in exposure time and the inhalation rate for a worker and that for members of the public; and a factor of two to adjust the occupational values, derived for adults, so that they are applicable to other age groups.

For those radionuclides for which submersion, that is external dose, is limiting, the occupational DAC in Table I, Column 3 was divided by two hundred nineteen. The factor of two hundred nineteen is composed of a factor of fifty, as described above, and a factor of 4.38 relating occupational exposure for two thousand hours per year to full-time exposure (eight thousand seven hundred sixty hours per year). Note that an additional factor of two for age considerations is not warranted in the submersion case.

The water concentrations were derived by taking the most restrictive occupational stochastic oral ingestion ALI and dividing by 7.3×10^7. The factor of 7.3×10^7 (ml) includes the following components: The factors of fifty and two described above and a factor of 7.3×10^5 (ml) which is the annual water intake of Reference Man.

Note 2 of this appendix provides groupings of radionuclides which are applicable to unknown mixtures of radionuclides. These groupings, including occupational inhalation ALIs and DACs, air and water effluent concentrations and releases to sewer, require demonstrating that the most limiting radionuclides in successive classes are absent. The limit for the unknown mixture is defined when the presence of one of the listed radionuclides cannot be definitely excluded as being present either from knowledge of the radionuclide composition of the source or from actual measurements.

Table III "Releases to Sewers"

The monthly average concentrations for release to sanitary sewerage are applicable to the provisions in WAC 246-221-190. The concentration values were derived by taking the most restrictive occupational stochastic oral ingestion ALI and dividing by $7.3 \times 1O^6$ (ml). The factor of $7.3 \times 1O^6$ (ml) is composed of a factor of $7.3 \times 1O^5$ (ml), the annual water intake by Reference Man, and a factor of ten, such that the concentrations, if the sewage released by the licensee were the only source of water ingested by a Reference Man during a year, would result in a committed effective dose equivalent of 5 mSv (0.5 rem).

LIST OF ELEMENTS

Name	Symbol	Atomic Number	Name	Symbol	Atomic Number
Actinium	Ac	89	Mercury	Hg	80
Aluminum	Al	13	Molybdenum	Mo	42
Americium	Am	95	Neodymium	Nd	60
Antimony	Sb	51	Neptunium	Np	93
Argon	Ar	18	Nickel	Ni	28
Arsenic	As	33	Niobium	Nb	41
Astatine	At	85	Osmium	Os	76
Barium	Ba	56	Palladium	Pd	46
Berkelium	Bk	97	Phosphorus	P	15
Beryllium	Be	4	Platinum	Pt	78
Bismuth	Bi	83	Plutonium	Pu	94
Bromine	Br	35	Polonium	Po	84
Cadmium	Cd	48	Potassium	K	19
Calcium	Ca	20	Praseodymium	Pr	59
Californium	Cf	98	Promethium	Pm	61
Carbon	C	6	Protactinium	Pa	91
Cerium	Ce	58	Radium	Ra	88
Cesium	Cs	55	Radon	Rn	86
Chlorine	Cl	17	Rhenium	Re	75
Chromium	Cr	24	Rhodium	Rh	45
Cobalt	Co	27	Rubidium	Rb	37
Copper	Cu	29	Ruthenium	Ru	44
Curium	Cm	96	Samarium	Sm	62
Dysprosium	Dy	66	Scandium	Sc	21
Einsteinium	Es	99	Selenium	Se	34
Erbium	Er	68	Silicon	Si	14
Europium	Eu	63	Silver	Ag	47
Fermium	Fm	100	Sodium	Na	11
Fluorine	F	9	Strontium	Sr	38
Francium	Fr	87	Sulfur	S	16
Gadolinium	Gd	64	Tantalum	Ta	73
Gallium	Ga	31	Technetium	Tc	43
Germanium	Ge	32	Tellurium	Te	52
Gold	Au	79	Terbium	Tb	65
Hafnium	Hf	72	Thallium	Tl	81
Holmium	Ho	67	Thorium	Th	90
Hydrogen	H	1	Thulium	Tm	69
Indium	In	49	Tin	Sn	50
Iodine	I	53	Titanium	Ti	22

LIST OF ELEMENTS

Name	Symbol	Atomic Number	Name	Symbol	Atomic Number
Iridium	Ir	77	Tungsten	W	74
Iron	Fe	26	Uranium	U	92
Krypton	Kr	36	Vanadium	V	23
Lanthanum	La	57	Xenon	Xe	54
Lead	Pb	82	Ytterbium	Yb	70
Lutetium	Lu	71	Yttrium	Y	39
Magnesium	Mg	12	Zinc	Zn	30
Manganese	Mn	25	Zirconium	Zr	40
Mendelevium	Md	101			

			Table 1 Occupational Values			Table II Effluent Concentration		Table III Releases to Sewers
			Col. 1 Oral Ingestion	Col. 2 Inhalation	Col. 3 Inhalation	Col. 1	Col. 2	Monthly Average Concen-tration
Atomic No.	Radionuclide	Class	ALI µCi	ALI µCi	DAC µCi/ml	Air µCi/ml	Water µCi/ml	µCi/ml
1	Hydrogen-3	Water, DAC includes skin absorption	8E+4	8E+4	2E-5	1E-7	1E-3	1E-2
	Gas (HT or T_2) Submersion[1]: Use above values as HT and T_2 oxidize in air and in the body to HTO.							
4	Beryllium-7	W, all compounds except those given for Y	4E+4	2E+4	9E-6	3E-8	6E-4	6E-3
		Y, oxides, halides, and nitrates	-	2E+4	8E-6	3E-8	-	-
4	Beryllium-10	W, see ^{7}Be	1E+3	2E+2	6E-8	2E-10	-	-
			LLI wall (1E+3)	-	-	-	2E-5	2E-4
		Y, see ^{7}Be	-	1E+1	6E-9	2E-11	-	-
6	Carbon-11[2]	Monoxide	-	1E+6	5E-4	2E-6	-	-
		Dioxide	-	6E+5	3E-4	9E-7	-	-
		Compounds	4E+5	4E+5	2E-4	6E-7	6E-3	6E-2
6	Carbon-14	Monoxide	-	2E+6	7E-4	2E-6	-	-
		Dioxide	-	2E+5	9E-5	3E-7	-	-
		Compounds	2E+3	2E+3	1E-6	3E-9	3E-5	3E-4
9	Fluorine-18[2]	D, fluorides of H, Li, Na, K, Rb, Cs, and Fr	5E+4	7E+4	3E-5	1E-7	-	-
			St wall (5E+4)	-	-	-	7E-4	7E-3
		W, fluorides of Be, Mg, Ca, Sr, Ba, Ra, Al, Ga, In, Tl, As, Sb, Bi, Fe, Ru, Os, Co, Ni, Pd, Pt, Cu, Ag, Au, Zn, Cd, Hg, Sc, Y, Ti, Zr, V, Nb, Ta, Mn, Tc, and Re	-	9E+4	4E-5	1E-7	-	-
		Y, lanthanum fluoride	-	8E+4	3E-5	1E-7	-	-
11	Sodium-22	D, all compounds	4E+2	6E+2	3E-7	9E-10	6E-6	6E-5
11	Sodium-24	D, all compounds	4E+3	5E+3	2E-6	7E-9	5E-5	5E-4
12	Magnesium-28	D, all compounds except those given for W	7E+2	2E+3	7E-7	2E-9	9E-6	9E-5
		W, oxides, hydroxides, carbides, halides, and nitrates	-	1E+3	5E-7	2E-9	-	-
13	Aluminum-26	D, all compounds except those given for W	4E+2	6E+1	3E-8	9E-11	6E-6	6E-5
		W, oxides, hydroxides, carbides, halides, and nitrates	-	9E+1	4E-8	1E-10	-	-
14	Silicon-31	D, all compounds except those given for W and Y	9E+3	3E+4	1E-5	4E-8	1E-4	1E-3

			Table 1 Occupational Values			Table II Effluent Concentration		Table III Releases to Sewers
			Col. 1 Oral Ingestion	Col. 2 Inhalation	Col. 3 Inhalation	Col. 1	Col. 2	Monthly Average Concen-tration
Atomic No.	Radionuclide	Class	ALI µCi	ALI µCi	DAC µCi/ml	Air µCi/ml	Water µCi/ml	µCi/ml
		W, oxides, hydroxides, carbides, and nitrates	-	3E+4	1E-5	5E-8	-	-
		Y, aluminosilicate glass	-	3E+4	1E-5	4E-8	-	-
14	Silicon-32	D, see ^{31}Si	2E+3	2E+2	1E-7	3E-10	-	-
			LLI wall (3E+3)	-	-	-	4E-5	4E-4
		W, see ^{31}Si	-	1E+2	5E-8	2E-10	-	-
		Y, see ^{31}Si	-	5E+0	2E-9	7E-12	-	-
15	Phosphorus-32	D, all compounds except phosphates given for W	6E+2	9E+2	4E-7	1E-9	9E-6	9E-5
		W, phosphates of Zn^{2+}, S^{3+}, Mg^{2+}, Fe^{3+}, Bi^{3+}, and lanthanides	-	4E+2	2E-7	5E-10	-	-
15	Phosphorus-33	D, see ^{32}P	6E+3	8E+3	4E-6	1E-8	8E-5	8E-4
		W, see ^{32}P	-	3E+3	1E-6	4E-9	-	-
16	Sulfur-35	Vapor	-	1E+4	6E-6	2E-8	-	-
		D, sulfides and sulfates except those given for W	1E+4	2E+4	7E-6	2E-8	-	-
			LLI wall (8E+3)	-	-	-	1E-4	1E-3
		W, elemental sulfur, sulfides of Sr, Ba, Ge, Sn, Pb, As, Sb, Bi, Cu, Ag, Au, Zn, Cd, Hg, W, and Mo. Sulfates of Ca, Sr, Ba, Ra, As, Sb, and Bi	6E+3 -	2E+3	9E-7	3E-9	-	-
17	Chlorine-36	D, chlorides of H, Li, Na, K, Rb, Cs, and Fr	2E+3	2E+3	1E-6	3E-9	2E-5	2E-4
		W, chlorides of lantha-nides, Be, Mg, Ca, Sr, Ba, Ra, Al, Ga, In, Tl, Ge, Sn, Pb, As, Sb, Bi, Fe, Ru, Os, Co, Rh, Ir, Ni, Pd, Pt, Cu, Ag, Au, Zn, Cd, Hg, Sc, Y, Ti, Zr, Hf, V, Nb, Ta, Cr, Mo, W, Mn, Tc, and Re	-	2E+2	1E-7	3E-10	-	-
17	Chlorine-38[2]	D, see ^{36}Cl	2E+4	4E+4	2E-5	6E-8	-	-
			St wall (3E+4)	-	-	-	3E-4	3E-3
		W, see ^{36}Cl	-	5E+4	2E-5	6E-8	-	-
17	Chlorine-39[2]	D, see ^{36}Cl	2E+4	5E+4	2E-5	7E-8	-	-
			St wall (4E+4)	-	-	-	5E-4	5E-3
		W, see ^{36}Cl	-	6E+4	2E-5	8E-8	-	-
18	Argon-37	Submersion[1]	-	-	1E+0	6E-3	-	-
18	Argon-39	Submersion[1]	-	-	2E-4	8E-7	-	-
18	Argon-41	Submersion[1]	-	-	3E-6	1E-8	-	-
19	Potassium-40	D, all compounds	3E+2	4E+2	2E-7	6E-10	4E-6	4E-5
19	Potassium-42	D, all compounds	5E+3	5E+3	2E-6	7E-9	6E-5	6E-4
19	Potassium-43	D, all compounds	6E+3	9E+3	4E-6	1E-8	9E-5	9E-4
19	Potassium-44[2]	D, all compounds	2E+4	7E+4	3E-5	9E-8	-	-

			Table 1 Occupational Values			Table II Effluent Concentration		Table III Releases to Sewers
			Col. 1 Oral Ingestion	Col. 2 Inhalation	Col. 3 Inhalation	Col. 1	Col. 2	Monthly Average Concen-tration
Atomic No.	Radionuclide	Class	ALI µCi	ALI µCi	DAC µCi/ml	Air µCi/ml	Water µCi/ml	µCi/ml
			St wall (4E+4)	-	-	-	5E-4	5E-3
19	Potassium-45[2]	D, all compounds	3E+4	1E+5	5E-5	2E-7	-	-
			St wall (5E+4)	-	-	-	7E-4	7E-3
20	Calcium-41	W, all compounds	3E+3	4E+3	2E-6	-	-	-
			Bone surf (4E+3)	Bone surf (4E+3)	-	5E-9	6E-5	6E-4
20	Calcium-45	W, all compounds	2E+3	8E+2	4E-7	1E-9	2E-5	2E-4
20	Calcium-47	W, all compounds	8E+2	9E+2	4E-7	1E-9	1E-5	1E-4
21	Scandium-43	Y, all compounds	7E+3	2E+4	9E-6	3E-8	1E-4	1E-3
21	Scandium-44m	Y, all compounds	5E+2	7E+2	3E-7	1E-9	7E-6	7E-5
21	Scandium-44	Y, all compounds	4E+3	1E+4	5E-6	2E-8	5E-5	5E-4
21	Scandium-46	Y, all compounds	9E+2	2E+2	1E-7	3E-10	1E-5	1E-4
21	Scandium-47	Y, all compounds	2E+3	3E+3	1E-6	4E-9	-	-
			LLI wall (3E+3)	-	-	-	4E-5	4E-4
21	Scandium-48	Y, all compounds	8E+2	1E+3	6E-7	2E-9	1E-5	1E-4
21	Scandium-49[2]	Y, all compounds	2E+4	5E+4	2E-5	8E-8	3E-4	3E-3
22	Titanium-44	D, all compounds except those given for W and Y	3E+2	1E+1	5E-9	2E-11	4E-6	4E-5
		W, oxides, hydroxides, carbides, halides, and nitrates	-	3E+1	1E-8	4E-11	-	-
		Y, SrTi0	-	6E+0	2E-9	8E-12	-	-
22	Titanium-45	D, see ^{44}Ti	9E+3	3E+4	1E-5	3E-8	1E-4	1E-3
		W, see ^{44}Ti	-	4E+4	1E-5	5E-8	-	-
		Y, see ^{44}Ti	-	3E+4	1E-5	4E-8	-	-
23	Vanadium-472	D, all compounds except those given for W	3E+4	8E+4	3E-5	1E-7	-	-
			St wall (3E+4)	-	-	-	4E-4	4E-3
		W, oxides, hydroxides, carbides, and halides	-	1E+5	4E-5	1E-7	-	-
23	Vanadium-48	D, see ^{47}V	6E+2	1E+3	5E-7	2E-9	9E-6	9E-5
		W, see ^{47}V	-	6E+2	3E-7	9E-10	-	-
23	Vanadium-49	D, see ^{47}V	7E+4	3E+4	1E-5	-	-	-
			LLI wall (9E+4)	Bone surf (3E+4)	-	5E-8	1E-3	1E-2
		W, see ^{47}V	-	2E+4	8E-6	2E-8	-	-
24	Chromium-48	D, all compounds except those given for W and Y	6E+3	1E+4	5E-6	2E-8	8E-5	8E-4
		W, halides and nitrates	-	7E+3	3E-6	1E-8	-	-
		Y, oxides and hydroxides	-	7E+3	3E-6	1E-8	-	-
24	Chromium-49[2]	D, see ^{48}Cr	3E+4	8E+4	4E-5	1E-7	4E-4	4E-3
		W, see ^{48}Cr	-	1E+5	4E-5	1E-7	-	-
		Y, see ^{48}Cr	-	9E+4	4E-5	1E-7	-	-
24	Chromium-51	D, see ^{48}Cr	4E+4	5E+4	2E-5	6E-8	5E-4	5E-3

			Table 1 Occupational Values			Table II Effluent Concentration		Table III Releases to Sewers
			Col. 1 Oral Ingestion	Col. 2 Inhalation	Col. 3 Inhalation	Col. 1	Col. 2	Monthly Average Concen-tration
Atomic No.	Radionuclide	Class	ALI µCi	ALI µCi	DAC µCi/ml	Air µCi/ml	Water µCi/ml	µCi/ml
		W, see ^{48}Cr	-	2E+4	1E-5	3E-8	-	-
		Y, see ^{48}Cr	-	2E+4	8E-6	3E-8	-	-
25	Manganese-51[2]	D, all compounds except those given for W	2E+4	5E+4	2E-5	7E-8	3E-4	3E-3
		W, oxides, hydroxides, halides, and nitrates	-	6E+4	3E-5	8E-8	-	-
25	Manganese-52m[2]	D, see ^{51}Mn	3E+4	9E+4	4E-5	1E-7	-	-
			St wall (4E+4)	-	-	-	5E-4	5E-3
		W, see ^{51}Mn	-	1E+5	4E-5	1E-7	-	-
25	Manganese-52	D, see ^{51}Mn	7E+2	1E+3	5E-7	2E-9	1E-5	1E-4
		W, see ^{51}Mn	-	9E+2	4E-7	1E-9	-	-
25	Manganese-53	D, see ^{51}Mn	5E+4	1E+4	5E-6	-	7E-4	7E-3
			-	Bone surf (2E+4)	-	3E-8	-	-
		W, see ^{51}Mn	-	1E+4	5E-6	2E-8	-	-
25	Manganese-54	D, see ^{51}Mn	2E+3	9E+2	4E-7	1E-9	3E-5	3E-4
		W, see ^{51}Mn	-	8E+2	3E-7	1E-9	-	-
25	Manganese-56	D, see ^{51}Mn	5E+3	2E+4	6E-6	2E-8	7E-5	7E-4
		W, see ^{51}Mn	-	2E+4	9E-6	3E-8	-	-
26	Iron-52	D, all compounds except those given for W	9E+2	3E+3	1E-6	4E-9	1E-5	1E-4
		W, oxides, hydroxides, and halides	-	2E+3	1E-6	3E-9	-	-
26	Iron-55	D, see ^{52}Fe	9E+3	2E+3	8E-7	3E-9	1E-4	1E-3
		W, see ^{52}Fe	-	4E+3	2E-6	6E-9	-	-
26	Iron-59	D, see ^{52}Fe	8E+2	3E+2	1E-7	5E-10	1E-5	1E-4
		W, see ^{52}Fe	-	5E+2	2E-7	7E-10	-	-
26	Iron-60	D, see ^{52}Fe	3E+1	6E+0	3E-9	9E-12	4E-7	4E-6
		W, see ^{52}Fe	-	2E+1	8E-9	3E-11	-	-
27	Cobalt-55	W, all compounds except those given for Y	1E+3	3E+3	1E-6	4E-9	2E-5	2E-4
		Y, oxides, hydroxides, halides, and nitrates	-	3E+3	1E-6	4E-9	-	-
27	Cobalt-56	W, see ^{55}Co	5E+2	3E+2	1E-7	4E-10	6E-6	6E-5
		Y, see ^{55}Co	4E+2	2E+2	8E-8	3E-10	-	-
27	Cobalt-57	W, see ^{55}Co	8E+3	3E+3	1E-6	4E-9	6E-5	6E-4
		Y, see ^{55}Co	4E+3	7E+2	3E-7	9E-10	-	-
27	Cobalt-58m	W, see ^{55}Co	6E+4	9E+4	4E-5	1E-7	8E-4	8E-3
		Y, see ^{55}Co	-	6E+4	3E-5	9E-8	-	-
27	Cobalt-58	W, see ^{55}Co	2E+3	1E+3	5E-7	2E-9	2E-5	2E-4
		Y, see ^{55}Co	1E+3	7E+2	3E-7	1E-9	-	-
27	Cobalt-60m[2]	W, see ^{55}Co	1E+6	4E+6	2E-3	6E-6	-	-
			St wall (1E+6)	-	-	-	2E-2	2E-1
		Y, see ^{55}Co	-	3E+6	1E-3	4E-6	-	-
27	Cobalt-60	W, see ^{55}Co	5E+2	2E+2	7E-8	2E-10	3E-6	3E-5
		Y, see ^{55}Co	2E+2	3E+1	1E-8	5E-11	-	-

			Table 1 Occupational Values			Table II Effluent Concentration		Table III Releases to Sewers
			Col. 1 Oral Ingestion	Col. 2 Inhalation	Col. 3 Inhalation	Col. 1	Col. 2	Monthly Average Concen-tration
Atomic No.	Radionuclide	Class	ALI µCi	ALI µCi	DAC µCi/ml	Air µCi/ml	Water µCi/ml	µCi/ml
27	Cobalt-61[2]	W, see ^{55}Co	2E+4	6E+4	3E-5	9E-8	3E-4	3E-3
		Y, see ^{55}Co	2E+4	6E+4	2E-5	8E-8	-	-
27	Cobalt-62m[2]	W, see ^{55}Co	4E+4	2E+5	7E-5	2E-7	-	-
			St wall (5E+4)	-	-	-	7E-4	7E-3
		Y, see ^{55}Co	-	2E+5	6E-5	2E-7	-	-
28	Nickel-56	D, all compounds except those given for W	1E+3	2E+3	8E-7	3E-9	2E-5	2E-4
		W, oxides, hydroxides, and carbides	-	1E+3	5E-7	2E-9	-	-
		Vapor	-	1E+3	5E-7	2E-9	-	-
28	Nickel-57	D, see ^{56}Ni	2E+3	5E+3	2E-6	7E-9	2E-5	2E-4
		W, see ^{56}Ni	-	3E+3	1E-6	4E-9	-	-
		Vapor	-	6E+3	3E-6	9E-9	-	-
28	Nickel-59	D, see ^{56}Ni	2E+4	4E+3	2E-6	5E-9	3E-4	3E-3
		W, see ^{56}Ni	-	7E+3	3E-6	1E-8	-	-
		Vapor	-	2E+3	8E-7	3E-9	-	-
28	Nickel-63	D, see ^{56}Ni	9E+3	2E+3	7E-7	2E-9	1E-4	1E-3
		W, see ^{56}Ni	-	3E+3	1E-6	4E-9	-	-
		Vapor	-	8E+2	3E-7	1E-9	-	-
28	Nickel-65	D, see ^{56}Ni	8E+3	2E+4	1E-5	3E-8	1E-4	1E-3
		W, see ^{56}Ni	-	3E+4	1E-5	4E-8	-	-
		Vapor	-	2E+4	7E-6	2E-8	-	-
28	Nickel-66	D, see ^{56}Ni	4E+2	2E+3	7E-7	2E-9	-	-
			LLI wall (5E+2)	-	-	-	6E-6	6E-5
		W, see ^{56}Ni	-	6E+2	3E-7	9E-10	-	-
		Vapor	-	3E+3	1E-6	4E-9	-	-
29	Copper-60[2]	D, all compounds except those given for W and Y	3E+4	9E+4	4E-5	1E-7	-	-
			St wall (3E+4)	-	-	-	4E-4	4E-3
		W, sulfides, halides, and nitrates	-	1E+5	5E-5	2E-7	-	-
		Y, oxides and hydroxides	-	1E+5	4E-5	1E-7	-	-
29	Copper-61	D, see ^{60}Cu	1E+4	3E+4	1E-5	4E-8	2E-4	2E-3
		W, see ^{60}Cu	-	4E+4	2E-5	6E-8	-	-
		Y, see ^{60}Cu	-	4E+4	1E-5	5E-8	-	-
29	Copper-64	D, see ^{60}Cu	1E+4	3E+4	1E-5	4E-8	2E-4	2E-3
		W, see ^{60}Cu	-	2E+4	1E-5	3E-8	-	-
		Y, see ^{60}Cu	-	2E+4	9E-6	3E-8	-	-
29	Copper-67	D, see ^{60}Cu	5E+3	8E+3	3E-6	1E-8	6E-5	6E-4
		W, see ^{60}Cu	-	5E+3	2E-6	7E-9	-	-
		Y, see ^{60}Cu	-	5E+3	2E-6	6E-9	-	-
30	Zinc-62	Y, all compounds	1E+3	3E+3	1E-6	4E-9	2E-5	2E-4
30	Zinc-63[2]	Y, all compounds	2E+4	7E+4	3E-5	9E-8	-	-
			St wall (3E+4)	-	-	-	3E-4	3E-3
30	Zinc-65	Y, all compounds	4E+2	3E+2	1E-7	4E-10	5E-6	5E-5
30	Zinc-69m	Y, all compounds	4E+3	7E+3	3E-6	1E-8	6E-5	6E-4

			Table 1 Occupational Values			Table II Effluent Concentration		Table III Releases to Sewers
			Col. 1 Oral Ingestion	Col. 2 Inhalation	Col. 3 Inhalation	Col. 1	Col. 2	Monthly Average Concen-tration
Atomic No.	Radionuclide	Class	ALI µCi	ALI µCi	DAC µCi/ml	Air µCi/ml	Water µCi/ml	µCi/ml
30	Zinc-69[2]	Y, all compounds	6E+4	1E+5	6E-5	2E-7	8E-4	8E-3
30	Zinc-71m	Y, all compounds	6E+3	2E+4	7E-6	2E-8	8E-5	8E-4
30	Zinc-72	Y, all compounds	1E+3	1E+3	5E-7	2E-9	1E-5	1E-4
31	Gallium-65[2]	D, all compounds except those given for W	5E+4	2E+5	7E-5	2E-7	-	-
			St wall (6E+4)	-	-	-	9E-4	9E-3
		W, oxides, hydroxides, carbides, halides, and nitrates	-	2E+5	8E-5	3E-7	-	-
31	Gallium-66	D, see ^{65}Ga	1E+3	4E+3	1E-6	5E-9	1E-5	1E-4
		W, see ^{65}Ga	-	3E+3	1E-6	4E-9	-	-
31	Gallium-67	D, see ^{65}Ga	7E+3	1E+4	6E-6	2E-8	1E-4	1E-3
		W, see ^{65}Ga	-	1E+4	4E-6	1E-8	-	-
31	Gallium-68[2]	D, see ^{65}Ga	2E+4	4E+4	2E-5	6E-8	2E-4	2E-3
		W, see ^{65}Ga	-	5E+4	2E-5	7E-8	-	-
31	Gallium-70[2]	D, see ^{65}Ga	5E+4	2E+5	7E-5	2E-7	-	-
			St wall (7E+4)	-	-	-	1E-3	1E-2
		W, see ^{65}Ga	-	2E+5	8E-5	3E-7	-	-
31	Gallium-72	D, see ^{65}Ga	1E+3	4E+3	1E-6	5E-9	2E-5	2E-4
		W, see ^{65}Ga	-	3E+3	1E-6	4E-9	-	-
31	Gallium-73	D, see ^{65}Ga	5E+3	2E+4	6E-6	2E-8	7E-5	7E-4
		W, see ^{65}Ga	-	2E+4	6E-6	2E-8	-	-
32	Germanium-66	D, all compounds except those given for W	2E+4	3E+4	1E-5	4E-8	3E-4	3E-3
		W, oxides, sulfides, and halides	-	2E+4	8E-6	3E-8	-	-
32	Germanium-67[2]	D, see ^{66}Ge	3E+4	9E+4	4E-5	1E-7	-	-
			St wall (4E+4)	-	-	-	6E-4	6E-3
		W, see ^{66}Ge	-	1E+5	4E-5	1E-7	-	-
32	Germanium-68	D, see ^{66}Ge	5E+3	4E+3	2E-6	5E-9	6E-5	6E-4
		W, see ^{66}Ge	-	1E+2	4E-8	1E-10	-	-
32	Germanium-69	D, see ^{66}Ge	1E+4	2E+4	6E-6	2E-8	2E-4	2E-3
		W, see ^{66}Ge	-	8E+3	3E-6	1E-8	-	-
32	Germanium-71	D, see ^{66}Ge	5E+5	4E+5	2E-4	6E-7	7E-3	7E-2
		W, see ^{66}Ge	-	4E+4	2E-5	6E-8	-	-
32	Germanium-75[2]	D, see ^{66}Ge	4E+4	8E+4	3E-5	1E-7	-	-
			St wall (7E+4)	-	-	-	9E-4	9E-3
		W, see ^{66}Ge	-	8E+4	4E-5	1E-7	-	-
32	Germanium-77	D, see ^{66}Ge	9E+3	1E+4	4E-6	1E-8	1E-4	1E-3
		W, see ^{66}Ge	-	6E+3	2E-6	8E-9	-	-
32	Germanium-78[2]	D, see ^{66}Ge	2E+4	2E+4	9E-6	3E-8	-	-
			St wall (2E+4)	-	-	-	3E-4	3E-3
		W, see ^{66}Ge	-	2E+4	9E-6	3E-8	-	-
33	Arsenic-69[2]	W, all compounds	3E+4	1E+5	5E-5	2E-7	-	-

			Table 1 Occupational Values			Table II Effluent Concentration		Table III Releases to Sewers
			Col. 1 Oral Ingestion	Col. 2 Inhalation	Col. 3 Inhalation	Col. 1	Col. 2	Monthly Average Concen-tration
Atomic No.	Radionuclide	Class	ALI µCi	ALI µCi	DAC µCi/ml	Air µCi/ml	Water µCi/ml	µCi/ml
			St wall (4E+4)	-	-	-	6E-4	6E-3
33	Arsenic-70[2]	W, all compounds	1E+4	5E+4	2E-5	7E-8	2E-4	2E-3
33	Arsenic-71	W, all compounds	4E+3	5E+3	2E-6	6E-9	5E-5	5E-4
33	Arsenic-72	W, all compounds	9E+2	1E+3	6E-7	2E-9	1E-5	1E-4
33	Arsenic-73	W, all compounds	8E+3	2E+3	7E-7	2E-9	1E-4	1E-3
33	Arsenic-74	W, all compounds	1E+3	8E+2	3E-7	1E-9	2E-5	2E-4
33	Arsenic-76	W, all compounds	1E+3	1E+3	6E-7	2E-9	1E-5	1E-4
33	Arsenic-77	W, all compounds	4E+3	5E+3	2E-6	7E-9	-	-
			LLI wall (5E+3)	-	-	-	6E-5	6E-4
33	Arsenic-78[2]	W, all compounds	8E+3	2E+4	9E-6	3E-8	1E-4	1E-3
34	Selenium-70[2]	D, all compounds except those given for W	2E+4	4E+4	2E-5	5E-8	1E-4	1E-3
		W, oxides, hydroxides, carbides, and elemental Se	1E+4	4E+4	2E-5	6E-8	-	-
34	Selenium-73m[2]	D, see ^{70}Se	6E+4	2E+5	6E-5	2E-7	4E-4	4E-3
		W, see ^{70}Se	3E+4	1E+5	6E-5	2E-7	-	-
34	Selenium-73	D, see ^{70}Se	3E+3	1E+4	5E-6	2E-8	4E-5	4E-4
		W, see ^{70}Se	-	2E+4	7E-6	2E-8	-	-
34	Selenium-75	D, see ^{70}Se	5E+2	7E+2	3E-7	1E-9	7E-6	7E-5
		W, see ^{70}Se	-	6E+2	3E-7	8E-10	-	-
34	Selenium-79	D, see ^{70}Se	6E+2	8E+2	3E-7	1E-9	8E-6	8E-5
		W, see ^{70}Se	-	6E+2	2E-7	8E-10	-	-
34	Selenium-81m[2]	D, see ^{70}Se	4E+4	7E+4	3E-5	9E-8	3E-4	3E-3
		W, see ^{70}Se	2E+4	7E+4	3E-5	1E-7	-	-
34	Selenium-81[2]	D, see ^{70}Se	6E+4	2E+5	9E-5	3E-7	-	-
			St wall (8E+4)	-	-	-	1E-3	1E-2
		W, see ^{70}Se	-	2E+5	1E-4	3E-7	-	-
34	Selenium-83[2]	D, see ^{70}Se	4E+4	1E+5	5E-5	2E-7	4E-4	4E-3
		W, see ^{70}Se	3E+4	1E+5	5E-5	2E-7	-	-
35	Bromine-74m[2]	D, bromides of H, Li, Na, K, Rb, Cs, and Fr	1E+4	4E+4	2E-5	5E-8	-	-
			St wall (2E+4)	-	-	-	3E-4	3E-3
		W, bromides of lantha-nides, Be, Mg, Ca, Sr, Ba, Ra, Al, Ga, In, Tl, Ge, Sn, Pb, As, Sb, Bi, Fe, Ru, Os, Co, Rh, Ir, Ni, Pd, Pt, Cu, Ag, Au, Zn, Cd, Hg, Sc, Y, Ti, Zr, Hf, V, Nb, Ta, Mn, Tc, and Re	-	4E+4	2E-5	6E-8	-	-
35	Bromine-74[2]	D, see ^{74m}Br	2E+4	7E+4	3E-5	1E-7	-	-
			St wall (4E+4)	-	-	-	5E-45E-3	-

			Table 1 Occupational Values			Table II Effluent Concentration		Table III Releases to Sewers
			Col. 1 Oral Ingestion	Col. 2 Inhalation	Col. 3 Inhalation	Col. 1	Col. 2	Monthly Average Concen-tration
Atomic No.	Radionuclide	Class	ALI µCi	ALI µCi	DAC µCi/ml	Air µCi/ml	Water µCi/ml	µCi/ml
		W, see ^{74m}Br	-	8E+4	4E-5	1E-7	-	-
35	Bromine-75[2]	D, see ^{74m}Br	3E+4	5E+4	2E-5	7E-8	-	-
			St wall (4E+4)	-	-	-	5E-4	5E-3
		W, see ^{74m}Br	-	5E+4	2E-5	7E-8	-	-
35	Bromine-76	D, see ^{74m}Br	4E+3	5E+3	2E-6	7E-9	5E-5	5E-4
		W, see ^{74m}Br	-	4E+3	2E-6	6E-9	-	-
35	Bromine-77	D, see ^{74m}Br	2E+4	2E+4	1E-5	3E-8	2E-4	2E-3
		W, see ^{74m}Br	-	2E+4	8E-6	3E-8	-	-
35	Bromine-80m	D, see ^{74m}Br	2E+4	2E+4	7E-6	2E-8	3E-4	3E-3
		W, see ^{74m}Br	-	1E+4	6E-6	2E-8	-	-
35	Bromine-80[2]	D, see ^{74m}Br	5E+4	2E+5	8E-5	3E-7	-	-
			St wall (9E+4)	-	-	-	1E-3	1E-2
		W, see ^{74m}Br	-	2E+5	9E-5	3E-7	-	-
35	Bromine-82	D, see ^{74m}Br	3E+3	4E+3	2E-6	6E-9	4E-5	4E-4
		W, see ^{74m}Br	-	4E+3	2E-6	5E-9	-	-
35	Bromine-83	D, see ^{74m}Br	5E+4	6E+4	3E-5	9E-8	-	-
			St wall (7E+4)	-	-	-	9E-4	9E-3
		W, see ^{74m}Br	-	6E+4	3E-5	9E-8	-	-
35	Bromine-84[2]	D, see ^{74m}Br	2E+4	6E+4	2E-5	8E-8	-	-
			St wall (3E+4)	-	-	-	4E-4	4E-3
		W, see ^{74m}Br	-	6E+4	3E-5	9E-8	-	-
36	Krypton-74[2]	Submersion[1]	-	-	3E-6	1E-8	-	-
36	Krypton-76	Submersion[1]	-	-	9E-6	4E-8	-	-
36	Krypton-77[2]	Submersion[1]	-	-	4E-6	2E-8	-	-
36	Krypton-79	Submersion[1]	-	-	2E-5	7E-8	-	-
36	Krypton-81	Submersion[1]	-	-	7E-4	3E-6	-	-
36	Krypton-83m[2]	Submersion[1]	-	-	1E-2	5E-5	-	-
36	Krypton-85m	Submersion[1]	-	-	2E-5	1E-7	-	-
36	Krypton-85	Submersion[1]	-	-	1E-4	7E-7	-	-
36	Krypton-87[2]	Submersion[1]	-	-	5E-6	2E-8	-	-
36	Krypton-88	Submersion[1]	-	-	2E-6	9E-9	-	-
37	Rubidium-79[2]	D, all compounds	4E+4	1E+5	5E-5	2E-7	-	-
			St wall (6E+4)	-	-	-	8E-4	8E-3
37	Rubidium-81m[2]	D, all compounds	2E+5	3E+5	1E-4	5E-7	-	-
			St wall (3E+5)	-	-	-	4E-3	4E-2
37	Rubidium-81	D, all compounds	4E+4	5E+4	2E-5	7E-8	5E-4	5E-3
37	Rubidium-82m	D, all compounds	1E+4	2E+4	7E-6	2E-8	2E-4	2E-3

			Table 1 Occupational Values			Table II Effluent Concentration		Table III Releases to Sewers
			Col. 1 Oral Ingestion	Col. 2 Inhalation	Col. 3 Inhalation	Col. 1	Col. 2	Monthly Average Concen-tration
Atomic No.	Radionuclide	Class	ALI µCi	ALI µCi	DAC µCi/ml	Air µCi/ml	Water µCi/ml	µCi/ml
37	Rubidium-83	D, all compounds	6E+2	1E+3	4E-7	1E-9	9E-6	9E-5
37	Rubidium-84	D, all compounds	5E+2	8E+2	3E-7	1E-9	7E-6	7E-5
37	Rubidium-86	D, all compounds	5E+2	8E+2	3E-7	1E-9	7E-6	7E-5
37	Rubidium-87	D, all compounds	1E+3	2E+3	6E-7	2E-9	1E-5	1E-4
37	Rubidium-88[2]	D, all compounds	2E+4	6E+4	3E-5	9E-8	-	-
			St wall (3E+4)	-	-	-	4E-4	4E-3
37	Rubidium-89[2]	D, all compounds	4E+4	1E+5	6E-5	2E-7	-	-
			St wall (6E+4)	-	-	-	9E-4	9E-3
38	Strontium-80[2]	D, all soluble compounds except SrTiO	4E+3	1E+4	5E-6	2E-8	6E-5	6E-4
		Y, all insoluble com-pounds and SrTi0	-	1E+4	5E-6	2E-8	-	-
38	Strontium-81[2]	D, see ^{80}Sr	3E+4	8E+4	3E-5	1E-7	3E-4	3E-3
		Y, see ^{80}Sr	2E+4	8E+4	3E-5	1E-7	-	-
38	Strontium-82	D, see ^{80}Sr	3E+2	4E+2	2E-7	6E-10	-	-
			LLI wall (2E+2)	-	-	-	3E-6	3E-5
		Y, see ^{80}Sr	2E+2	9E+1	4E-8	1E-10	-	-
38	Strontium-83	D, see ^{80}Sr	3E+3	7E+3	3E-6	1E-8	3E-5	3E-4
		Y, see ^{80}Sr	2E+3	4E+3	1E-6	5E-9	-	-
38	Strontium-85m[2]	D, see ^{80}Sr	2E+5	6E+5	3E-4	9E-7	3E-3	3E-2
		Y, see ^{80}Sr	-	8E+5	4E-4	1E-6	-	-
38	Strontium-85	D, see ^{80}Sr	3E+3	3E+3	1E-6	4E-9	4E-5	4E-4
		Y, see ^{80}Sr	-	2E+3	6E-7	2E-9	-	-
38	Strontium-87m	D, see ^{80}Sr	5E+4	1E+5	5E-5	2E-7	6E-4	6E-3
		Y, see ^{80}Sr	4E+4	2E+5	6E-5	2E-7	-	-
38	Strontium-89	D, see ^{80}Sr	6E+2	8E+2	4E-7	1E-9	-	-
			LLI wall (6E+2)	-	-	-	8E-6	8E-5
		Y, see ^{80}Sr	5E+2	1E+2	6E-8	2E-10	-	-
38	Strontium-90	D, see ^{80}Sr	3E+1	2E+1	8E-9	-	-	-
			Bone surf (4E+1)	Bone surf (2E+1)	-	3E-11	5E-7	5E-6
		Y, see ^{80}Sr	-	4E+0	2E-9	6E-12	-	-
38	Strontium-91	D, see ^{80}Sr	2E+3	6E+3	2E-6	8E-9	2E-5	2E-4
		Y, see ^{80}Sr	-	4E+3	1E-6	5E-9	-	-
38	Strontium-92	D, see ^{80}Sr	3E+3	9E+3	4E-6	1E-8	4E-5	4E-4
		Y, see ^{80}Sr	-	7E+3	3E-6	9E-9	-	-
39	Yttrium-86m[2]	W, all compounds except those given for Y	2E+4	6E+4	2E-5	8E-8	3E-4	3E-3
		Y, oxides and hydroxides	-	5E+4	2E-5	8E-8	-	-
39	Yttrium-86	W, see ^{86m}Y	1E+3	3E+3	1E-6	5E-9	2E-5	2E-4
		Y, see ^{86m}Y	-	3E+3	1E-6	5E-9	-	-
39	Yttrium-87	W, see ^{86m}Y	2E+3	3E+3	1E-6	5E-9	3E-5	3E-4

			Table 1 Occupational Values			Table II Effluent Concentration		Table III Releases to Sewers
			Col. 1 Oral Ingestion	Col. 2 Inhalation	Col. 3 Inhalation	Col. 1	Col. 2	Monthly Average Concen-tration
Atomic No.	Radionuclide	Class	ALI µCi	ALI µCi	DAC µCi/ml	Air µCi/ml	Water µCi/ml	µCi/ml
		Y, see ^{86m}Y	-	3E+3	1E-6	5E-9	-	-
39	Yttrium-88	W, see ^{86m}Y	1E+3	3E+2	1E-7	3E-10	1E-5	1E-4
		Y, see ^{86m}Y	-	2E+2	1E-7	3E-10	-	-
39	Yttrium-90m	W, see ^{86m}Y	8E+3	1E+4	5E-6	2E-8	1E-4	1E-3
		Y, see ^{86m}Y	-	1E+4	5E-6	2E-8	-	-
39	Yttrium-90	W, see ^{86m}Y	4E+2	7E+2	3E-7	9E-10	-	-
			LLI wall (5E+2)	-	-	-	7E-6	7E-5
		Y, see ^{86m}Y	-	6E+2	3E-7	9E-10	-	-
39	Yttrium-91m[2]	W, see ^{86m}Y	1E+5	2E+5	1E-4	3E-7	2E-3	2E-2
		Y, see ^{86m}Y	-	2E+5	7E-5	2E-7	-	-
39	Yttrium-91	W, see ^{86m}Y	5E+2	2E+2	7E-8	2E-10	-	-
			LLI wall (6E+2)	-	-	-	8E-6	8E-5
		Y, see ^{86m}Y	-	1E+2	5E-8	2E-10	-	-
39	Yttrium-92	W, see ^{86m}Y	3E+3	9E+3	4E-6	1E-8	4E-5	4E-4
		Y, see ^{86m}Y	-	8E+3	3E-6	1E-8	-	-
39	Yttrium-93	W, see ^{86m}Y	1E+3	3E+3	1E-6	4E-9	2E-5	2E-4
		Y, see ^{86m}Y	-	2E+3	1E-6	3E-9	-	-
39	Yttrium-94[2]	W, see ^{86m}Y	2E+4	8E+4	3E-5	1E-7	-	-
			St wall (3E+4)	-	-	-	4E-4	4E-3
		Y, see ^{86m}Y	-	8E+4	3E-5	1E-7	-	-
39	Yttrium-95[2]	W, see ^{86m}Y	4E+4	2E+5	6E-5	2E-7	-	-
			St wall (5E+4)	-	-	-	7E-4	7E-3
		Y, see ^{86m}Y	-	1E+5	6E-5	2E-7	-	-
40	Zirconium-86	D, all compounds except those given for W and Y	1E+3	4E+3	2E-6	6E-9	2E-5	2E-4
		W, oxides, hydroxides, halides, and nitrates	-	3E+3	1E-6	4E-9	-	-
		Y, carbide	-	2E+3	1E-6	3E-9	-	-
40	Zirconium-88	D, see ^{86}Zr	4E+3	2E+2	9E-8	3E-10	5E-5	5E-4
		W, see ^{86}Zr	-	5E+2	2E-7	7E-10	-	-
		Y, see ^{86}Zr	-	3E+2	1E-7	4E-10	-	-
40	Zirconium-89	D, see ^{86}Zr	2E+3	4E+3	1E-6	5E-9	2E-5	2E-4
		W, see ^{86}Zr	-	2E+3	1E-6	3E-9	-	-
		Y, see ^{86}Zr	-	2E+3	1E-6	3E-9	-	-
40	Zirconium-93	D, see ^{86}Zr	1E+3	6E+0	3E-9	-	-	-
			Bone surf (3E+3)	Bone surf (2E+1)	-	2E-11	4E-5	4E-4
		W, see ^{86}Zr	-	2E+1	1E-8	-	-	-
			-	Bone surf (6E+1)	-	9E-11	-	-
		Y, see ^{86}Zr	-	6E+1	2E-8	-	-	-
			-	Bone surf (7E+1)	-	9E-11	-	-
40	Zirconium-95	D, see ^{86}Zr	1E+3	1E+2	5E-8	-	2E-5	2E-4
			-	Bone surf (3E+2)	-	4E-10	-	-
		W, see ^{86}Zr	-	4E+2	2E-7	5E-10	-	-

			Table 1 Occupational Values			Table II Effluent Concentration		Table III Releases to Sewers
			Col. 1 Oral Ingestion	Col. 2 Inhalation	Col. 3 Inhalation	Col. 1	Col. 2	Monthly Average Concen-tration
Atomic No.	Radionuclide	Class	ALI µCi	ALI µCi	DAC µCi/ml	Air µCi/ml	Water µCi/ml	µCi/ml
		Y, see ^{86}Zr	-	3E+2	1E-7	4E-10	-	-
40	Zirconium-97	D, see ^{86}Zr	6E+2	2E+3	8E-7	3E-9	9E-6	9E-5
		W, see ^{86}Zr	-	1E+3	6E-7	2E-9	-	-
		Y, see ^{86}Zr	-	1E+3	5E-7	2E-9	-	-
41	Niobium-88[2]	W, all compounds except those given for Y	5E+4	2E+5	9E-5	3E-7	-	-
			St wall (7E+4)	-	-	-	1E-3	1E-2
		Y, oxides and hydroxides	-	2E+5	9E-5	3E-7	-	-
41	Niobium-89[2] (66 min)	W, see ^{88}Nb	1E+4	4E+4	2E-5	6E-8	1E-4	1E-3
		Y, see ^{88}Nb	-	4E+4	2E-5	5E-8	-	-
41	Niobium-89 (122 min)	W, see ^{88}Nb	5E+3	2E+4	8E-6	3E-8	7E-5	7E-4
		Y, see ^{88}Nb	-	2E+4	6E-6	2E-8	-	-
41	Niobium-90	W, see ^{88}Nb	1E+3	3E+3	1E-6	4E-9	1E-5	1E-4
		Y, see ^{88}Nb	-	2E+3	1E-6	3E-9	-	-
41	Niobium-93m	W, see ^{88}Nb	9E+3	2E+3	8E-7	3E-9	-	-
			LLI wall (1E+4)	-	-	-	2E-4	2E-3
		Y, see ^{88}Nb	-	2E+2	7E-8	2E-10	-	-
41	Niobium-94	W, see ^{88}Nb	9E+2	2E+2	8E-8	3E-10	1E-5	1E-4
		Y, see ^{88}Nb	-	2E+1	6E-9	2E-11	-	-
41	Niobium-95m	W, see ^{88}Nb	2E+3	3E+3	1E-6	4E-9	-	-
			LLI wall (2E+3)	-	-	-	3E-5	3E-4
		Y, see ^{88}Nb	-	2E+3	9E-7	3E-9	-	-
41	Niobium-95	W, see ^{88}Nb	2E+3	1E+3	5E-7	2E-9	3E-5	3E-4
		Y, see ^{88}Nb	-	1E+3	5E-7	2E-9	-	-
41	Niobium-96	W, see ^{88}Nb	1E+3	3E+3	1E-6	4E-9	2E-5	2E-4
		Y, see ^{88}Nb	-	2E+3	1E-6	3E-9	-	-
41	Niobium-97[2]	W, see ^{88}Nb	2E+4	8E+4	3E-5	1E-7	3E-4	3E-3
		Y, see ^{88}Nb	-	7E+4	3E-5	1E-7	-	-
41	Niobium-98[2]	W, see ^{88}Nb	1E+4	5E+4	2E-5	8E-8	2E-4	2E-3
		Y, see ^{88}Nb	-	5E+4	2E-5	7E-8	-	-
42	Molybdenum-90	D, all compounds except those given for Y	4E+3	7E+3	3E-6	1E-8	3E-5	3E-4
		Y, oxides, hydroxides, and MoS	2E+3	5E+3	2E-6	6E-9	-	-
42	Molybdenum-93m	D, see ^{90}Mo	9E+3	2E+4	7E-6	2E-8	6E-5	6E-4
		Y, see ^{90}Mo	4E+3	1E+4	6E-6	2E-8	-	-
42	Molybdenum-93	D, see ^{90}Mo	4E+3	5E+3	2E-6	8E-9	5E-5	5E-4
		Y, see ^{90}Mo	2E+4	2E+2	8E-8	2E-10	-	-
42	Molybdenum-99	D, see ^{90}Mo	2E+3	3E+3	1E-6	4E-9	-	-
			LLI wall (1E+3)	-	-	-	2E-5	2E-4
		Y, see ^{90}Mo	1E+3	1E+3	6E-7	2E-9	-	-
42	Molybdenum-101[2]	D, see ^{90}Mo	4E+4	1E+5	6E-5	2E-7	-	-

			Table 1 Occupational Values			Table II Effluent Concentration		Table III Releases to Sewers
			Col. 1 Oral Ingestion	Col. 2 Inhalation	Col. 3 Inhalation	Col. 1	Col. 2	Monthly Average Concen-tration
Atomic No.	Radionuclide	Class	ALI µCi	ALI µCi	DAC µCi/ml	Air µCi/ml	Water µCi/ml	µCi/ml
			St wall (5E+4)	-	-	-	7E-4	7E-3
		Y, see ^{90}Mo	-	1E+5	6E-5	2E-7	-	-
43	Technetium-93m[2]	D, all compounds except those given for W	7E+4	2E+5	6E-5	2E-7	1E-3	1E-2
		W, oxides, hydroxides, halides, and nitrates	-	3E+5	1E-4	4E-7	-	-
43	Technetium-93	D, see ^{93m}Tc	3E+4	7E+4	3E-5	1E-7	4E-4	4E-3
		W, see ^{93m}Tc	-	1E+5	4E-5	1E-7	-	-
43	Technetium-94m[2]	D, see ^{93m}Tc	2E+4	4E+4	2E-5	6E-8	3E-4	3E-3
		W, see ^{93m}Tc	-	6E+4	2E-5	8E-8	-	-
43	Technetium-94	D, see ^{93m}Tc	9E+3	2E+4	8E-6	3E-8	1E-4	1E-3
		W, see ^{93m}Tc	-	2E+4	1E-5	3E-8	-	-
43	Technetium-95m	D, see ^{93m}Tc	4E+3	5E+3	2E-6	8E-9	5E-5	5E-4
		W, see ^{93m}Tc	-	2E+3	8E-7	3E-9	-	-
43	Technetium-95	D, see ^{93m}Tc	1E+4	2E+4	9E-6	3E-8	1E-4	1E-3
		W, see ^{93m}Tc	-	2E+4	8E-6	3E-8	-	-
43	Technetium-96m[2]	D, see ^{93m}Tc	2E+5	3E+5	1E-4	4E-7	2E-3	2E-2
		W, see ^{93m}Tc	-	2E+5	1E-4	3E-7	-	-
43	Technetium-96	D, see ^{93m}Tc	2E+3	3E+3	1E-6	5E-9	3E-5	3E-4
		W, see ^{93m}Tc	-	2E+3	9E-7	3E-9	-	-
43	Technetium-97m	D, see ^{93m}Tc	5E+3	7E+3	3E-6	-	6E-5	6E-4
			-	St wall (7E+3)	-	1E-8	-	-
		W, see ^{93m}Tc	-	1E+3	5E-7	2E-9	-	-
43	Technetium-97	D, see ^{93m}Tc	4E+4	5E+4	2E-5	7E-8	5E-4	5E-3
		W, see ^{93m}Tc	-	6E+3	2E-6	8E-9	-	-
43	Technetium-98	D, see ^{93m}Tc	1E+3	2E+3	7E-7	2E-9	1E-5	1E-4
		W, see ^{93m}Tc	-	3E+2	1E-7	4E-10	-	-
43	Technetium-99m	D, see ^{93m}Tc	8E+4	2E+5	6E-5	2E-7	1E-3	1E-2
		W, see ^{93m}Tc	-	2E+5	1E-4	3E-7	-	-
43	Technetium-99	D, see ^{93m}Tc	4E+3	5E+3	2E-6	-	6E-5	6E-4
			-	St wall (6E+3)	-	8E-9	-	-
		W, see ^{93m}Tc	-	7E+2	3E-7	9E-10	-	-
43	Technetium-101[2]	D, see ^{93m}Tc	9E+4	3E+5	1E-4	5E-7	-	-
			St wall (1E+5)	-	-	-	2E-3	2E-2
		W, see ^{93m}Tc	-	4E+5	2E-4	5E-7	-	-
43	Technetium-104[2]	D, see ^{93m}Tc	2E+4	7E+4	3E-5	1E-7	-	-
			St wall (3E+4)	-	-	-	4E-4	4E-3
		W, see ^{93m}Tc	-	9E+4	4E-5	1E-7	-	-
44	Ruthenium-94[2]	D, all compounds except those given for W and Y	2E+4	4E+4	2E-5	6E-8	2E-4	2E-3
		W, halides	-	6E+4	3E-5	9E-8	-	-
		Y, oxides and hydroxides	-	6E+4	2E-5	8E-8	-	-
44	Ruthenium-97	D, see ^{94}Ru	8E+3	2E+4	8E-6	3E-8	1E-4	1E-3

			Table 1 Occupational Values			Table II Effluent Concentration		Table III Releases to Sewers
			Col. 1 Oral Ingestion	Col. 2 Inhalation	Col. 3 Inhalation	Col. 1	Col. 2	Monthly Average Concen-tration
Atomic No.	Radionuclide	Class	ALI µCi	ALI µCi	DAC µCi/ml	Air µCi/ml	Water µCi/ml	µCi/ml
		W, see ^{94}Ru	-	1E+4	5E-6	2E-8	-	-
		Y, see ^{94}Ru	-	1E+4	5E-6	2E-8	-	-
44	Ruthenium-103	D, see ^{94}Ru	2E+3	2E+3	7E-7	2E-9	3E-5	3E-4
		W, see ^{94}Ru	-	1E+3	4E-7	1E-9	-	-
		Y, see ^{94}Ru	-	6E+2	3E-7	9E-10	-	-
44	Ruthenium-105	D, see ^{94}Ru	5E+3	1E+4	6E-6	2E-8	7E-5	7E-4
		W, see ^{94}Ru	-	1E+4	6E-6	2E-8	-	-
		Y, see ^{94}Ru	-	1E+4	5E-6	2E-8	-	-
44	Ruthenium-106	D, see ^{94}Ru	2E+2	9E+1	4E-8	1E-10	-	-
			LLI wall (2E+2)	-	-	-	3E-6	3E-5
		W, see ^{94}Ru	-	5E+1	2E-8	8E-11	-	-
		Y, see ^{94}Ru	-	1E+1	5E-9	2E-11	-	-
45	Rhodium-99m	D, all compounds except those given for W and Y	2E+4	6E+4	2E-5	8E-8	2E-4	2E-3
		W, halides	-	8E+4	3E-5	1E-7	-	-
		Y, oxides and hydroxides	-	7E+4	3E-5	9E-8	-	-
45	Rhodium-99	D, see ^{99m}Rh	2E+3	3E+3	1E-6	4E-9	3E-5	3E-4
		W, see ^{99m}Rh	-	2E+3	9E-7	3E-9	-	-
		Y, see ^{99m}Rh	-	2E+3	8E-7	3E-9	-	-
45	Rhodium-100	D, see ^{99m}Rh	2E+3	5E+3	2E-6	7E-9	2E-5	2E-4
		W, see ^{99m}Rh	-	4E+3	2E-6	6E-9	-	-
		Y, see ^{99m}Rh	-	4E+3	2E-6	5E-9	-	-
45	Rhodium-101m	D, see ^{99m}Rh	6E+3	1E+4	5E-6	2E-8	8E-5	8E-4
		W, see ^{99m}Rh	-	8E+3	4E-6	1E-8	-	-
		Y, see ^{99m}Rh	-	8E+3	3E-6	1E-8	-	-
45	Rhodium-101	D, see ^{99m}Rh	2E+3	5E+2	2E-7	7E-10	3E-5	3E-4
		W, see ^{99m}Rh	-	8E+2	3E-7	1E-9	-	-
		Y, see ^{99m}Rh	-	2E+2	6E-8	2E-10	-	-
45	Rhodium-102m	D, see ^{99m}Rh	1E+3	5E+2	2E-7	7E-10	-	-
			LLI wall (1E+3)	-	-	-	2E-5	2E-4
		W, see ^{99m}Rh	-	4E+2	2E-7	5E-10	-	-
		Y, see ^{99m}Rh	-	1E+2	5E-8	2E-10	-	-
45	Rhodium-102	D, see ^{99m}Rh	6E+2	9E+1	4E-8	1E-10	8E-6	8E-5
		W, see ^{99m}Rh	-	2E+2	7E-8	2E-10	-	-
		Y, see ^{99m}Rh	-	6E+1	2E-8	8E-11	-	-
45	Rhodium-103m[2]	D, see ^{99m}Rh	4E+5	1E+6	5E-4	2E-6	6E-3	6E-2
		W, see ^{99m}Rh	-	1E+6	5E-4	2E-6	-	-
		Y, see ^{99m}Rh	-	1E+6	5E-4	2E-6	-	-
45	Rhodium-105	D, see ^{99m}Rh	4E+3	1E+4	5E-6	2E-8	-	-
			LLI wall (4E+3)	-	-	-	5E-5	5E-4
		W, see ^{99m}Rh	-	6E+3	3E-6	9E-9	-	-
		Y, see ^{99m}Rh	-	6E+3	2E-6	8E-9	-	-
45	Rhodium-106m	D, see ^{99m}Rh	8E+3	3E+4	1E-5	4E-8	1E-4	1E-3
		W, see ^{99m}Rh	-	4E+4	2E-5	5E-8	-	-
		Y, see ^{99m}Rh	-	4E+4	1E-5	5E-8	-	-
45	Rhodium-107[2]	D, see ^{99m}Rh	7E+4	2E+5	1E-4	3E-7	-	-

			Table 1 Occupational Values			Table II Effluent Concentration		Table III Releases to Sewers
			Col. 1 Oral Ingestion	Col. 2 Inhalation	Col. 3 Inhalation	Col. 1	Col. 2	Monthly Average Concen-tration
Atomic No.	Radionuclide	Class	ALI µCi	ALI µCi	DAC µCi/ml	Air µCi/ml	Water µCi/ml	µCi/ml
			St wall (9E+4)	-	-	-	1E-3	1E-2
		W, see ^{99m}Rh	-	3E+5	1E-4	4E-7	-	-
		Y, see ^{99m}Rh	-	3E+5	1E-4	3E-7	-	-
46	Palladium-100	D, all compounds except those given for W and Y	1E+3	1E+3	6E-7	2E-9	2E-5	2E-4
		W, nitrates	-	1E+3	5E-7	2E-9	-	-
		Y, oxides and hydroxides	-	1E+3	6E-7	2E-9	-	-
46	Palladium-101	D, see ^{100}Pd	1E+4	3E+4	1E-5	5E-8	2E-4	2E-3
		W, see ^{100}Pd	-	3E+4	1E-5	5E-8	-	-
		Y, see ^{100}Pd	-	3E+4	1E-5	4E-8	-	-
46	Palladium-103	D, see ^{100}Pd	6E+3	6E+3	3E-6	9E-9	-	-
			LLI wall (7E+3)	-	-	-	1E-4	1E-3
		W, see ^{100}Pd	-	4E+3	2E-6	6E-9	-	-
		Y, see ^{100}Pd	-	4E+3	1E-6	5E-9	-	-
46	Palladium-107	D, see ^{100}Pd	3E+4	2E+4	9E-6	-	-	-
			LLI wall (4E+4)	Kidneys (2E+4)	-	3E-8	5E-4	5E-3
		W, see ^{100}Pd	-	7E+3	3E-6	1E-8	-	-
		Y, see ^{100}Pd	-	4E+2	2E-7	6E-10	-	-
46	Palladium-109	D, see ^{100}Pd	2E+3	6E+3	3E-6	9E-9	3E-5	3E-4
		W, see ^{100}Pd	-	5E+3	2E-6	8E-9	-	-
		Y, see ^{100}Pd	-	5E+3	2E-6	6E-9	-	-
47	Silver-102[2]	D, all compounds except those given for W and Y	5E+4	2E+5	8E-5	2E-7	-	-
			St wall (6E+4)	-	-	-	9E-4	9E-3
		W, nitrates and sulfides	-	2E+5	9E-5	3E-7	-	-
		Y, oxides and hydroxides	-	2E+5	8E-5	3E-7	-	-
47	Silver-103[2]	D, see ^{102}Ag	4E+4	1E+5	4E-5	1E-7	5E-4	5E-3
		W, see ^{102}Ag	-	1E+5	5E-5	2E-7	-	-
		Y, see ^{102}Ag	-	1E+5	5E-5	2E-7	-	-
47	Silver-104m[2]	D, see ^{102}Ag	3E+4	9E+4	4E-5	1E-7	4E-4	4E-3
		W, see ^{102}Ag	-	1E+5	5E-5	2E-7	-	-
		Y, see ^{102}Ag	-	1E+5	5E-5	2E-7	-	-
47	Silver-104[2]	D, see ^{102}Ag	2E+4	7E+4	3E-5	1E-7	3E-4	3E-3
		W, see ^{102}Ag	-	1E+5	6E-5	2E-7	-	-
		Y, see ^{102}Ag	-	1E+5	6E-5	2E-7	-	-
47	Silver-105	D, see ^{102}Ag	3E+3	1E+3	4E-7	1E-9	4E-5	4E-4
		W, see ^{102}Ag	-	2E+3	7E-7	2E-9	-	-
		Y, see ^{102}Ag	-	2E+3	7E-7	2E-9	-	-
47	Silver-106m	D, see ^{102}Ag	8E+2	7E+2	3E-7	1E-9	1E-5	1E-4
		W, see ^{102}Ag	-	9E+2	4E-7	1E-9	-	-
		Y, see ^{102}Ag	-	9E+2	4E-7	1E-9	-	-
47	Silver-106[2]	D, see ^{102}Ag	6E+4	2E+5	8E-5	3E-7	-	-
			St. wall (6E+4)	-	-	-	9E-4	9E-3
		W, see ^{102}Ag	-	2E+5	9E-5	3E-7	-	-
		Y, see ^{102}Ag	-	2E+5	8E-5	3E-7	-	-
47	Silver-108m	D, see ^{102}Ag	6E+2	2E+2	8E-8	3E-10	9E-6	9E-5

			Table 1 Occupational Values			Table II Effluent Concentration		Table III Releases to Sewers
			Col. 1 Oral Ingestion	Col. 2 Inhalation	Col. 3 Inhalation	Col. 1	Col. 2	Monthly Average Concen-tration
Atomic No.	Radionuclide	Class	ALI µCi	ALI µCi	DAC µCi/ml	Air µCi/ml	Water µCi/ml	µCi/ml
		W, see ^{102}Ag	-	3E+2	1E-7	4E-10	-	-
		Y, see ^{102}Ag	-	2E+1	1E-8	3E-11	-	-
47	Silver-110m	D, see ^{102}Ag	5E+2	1E+2	5E-8	2E-10	6E-6	6E-5
		W, see ^{102}Ag	-	2E+2	8E-8	3E-10	-	-
		Y, see ^{102}Ag	-	9E+1	4E-8	1E-10	-	-
47	Silver-111	D, see ^{102}Ag	9E+2	2E+3	6E-7	-	-	-
			LLI wall (1E+3)	Liver (2E+3)	-	2E-9	2E-5	2E-4
		W, see ^{102}Ag	-	9E+2	4E-7	1E-9	-	-
		Y, see ^{102}Ag	-	9E+2	4E-7	1E-9	-	-
47	Silver-112	D, see ^{102}Ag	3E+3	8E+3	3E-6	1E-8	4E-5	4E-4
		W, see ^{102}Ag	-	1E+4	4E-6	1E-8	-	-
		Y, see ^{102}Ag	-	9E+3	4E-6	1E-8	-	-
47	Silver-115[2]	D, see ^{102}Ag	3E+4	9E+4	4E-5	1E-7	-	-
			St wall (3E+4)	-	-	-	4E-4	4E-3
		W, see ^{102}Ag	-	9E+4	4E-5	1E-7	-	-
		Y, see ^{102}Ag	-	8E+4	3E-5	1E-7	-	-
48	Cadmium-104[2]	D, all compounds except those given for W and Y	2E+4	7E+4	3E-5	9E-8	3E-4	3E-3
		W, sulfides, halides, and nitrates	-	1E+5	5E-5	2E-7	-	-
		Y, oxides and hydroxides	-	1E+5	5E-5	2E-7	-	-
48	Cadmium-107	D, see ^{104}Cd	2E+4	5E+4	2E-5	8E-8	3E-4	3E-3
		W, see ^{104}Cd	-	6E+4	2E-5	8E-8	-	-
		Y, see ^{104}Cd	-	5E+4	2E-5	7E-8	-	-
48	Cadmium-109	D, see ^{104}Cd	3E+2	4E+1	1E-8	-	-	-
			Kidneys (4E+2)	Kidneys (5E+1)	-	7E-11	6E-6	6E-5
		W, see ^{104}Cd	-	1E+2	5E-8	-	-	-
			-	Kidneys (1E+2)	-	2E-10	-	-
		Y, see ^{104}Cd	-	1E+2	5E-8	2E-10	-	-
48	Cadmium-113m	D, see ^{104}Cd	2E+1	2E+0	1E-9	-	-	-
			Kidneys (4E+1)	Kidneys (4E+0)	-	5E-12	5E-7	5E-6
		W, see ^{104}Cd	-	8E+0	4E-9	-	-	-
			-	Kidneys (1E+1)	-	2E-11	-	-
		Y, see ^{104}Cd	-	1E+1	5E-9	2E-11	-	-
48	Cadmium-113	D, see ^{104}Cd	2E+1	2E+0	9E-10	-	-	-
			Kidneys (3E+1)	Kidneys (3E+0)	-	5E-12	4E-7	4E-6
		W, see ^{104}Cd	-	8E+0	3E-9	-	-	-
			-	Kidneys (1E+1)	-	2E-11	-	-
		Y, see ^{104}Cd	-	1E+1	6E-9	2E-11	-	-
48	Cadmium-115m	D, see ^{104}Cd	3E+2	5E+1	2E-8	-	4E-6	4E-5
			-	Kidneys (8E+1)	-	1E-10	-	-
		W, see ^{104}Cd	-	1E+2	5E-8	2E-10	-	-
		Y, see ^{104}Cd	-	1E+2	6E-8	2E-10	-	-
48	Cadmium-115	D, see ^{104}Cd	9E+2	1E+3	6E-7	2E-9	-	-

			Table 1 Occupational Values			Table II Effluent Concentration		Table III Releases to Sewers
			Col. 1 Oral Ingestion	Col. 2 Inhalation	Col. 3 Inhalation	Col. 1	Col. 2	Monthly Average Concentration
Atomic No.	Radionuclide	Class	ALI µCi	ALI µCi	DAC µCi/ml	Air µCi/ml	Water µCi/ml	µCi/ml
			LLI wall (1E+3)	-	-	-	1E-5	1E-4
		W, see ^{104}Cd	-	1E+3	5E-7	2E-9	-	-
		Y, see ^{104}Cd	-	1E+3	6E-7	2E-9	-	-
48	Cadmium-117m	D, see ^{104}Cd	5E+3	1E+4	5E-6	2E-8	6E-5	6E-4
		W, see ^{104}Cd	-	2E+4	7E-6	2E-8	-	-
		Y, see ^{104}Cd	-	1E+4	6E-6	2E-8	-	-
48	Cadmium-117	D, see ^{104}Cd	5E+3	1E+4	5E-6	2E-8	6E-5	6E-4
		W, see ^{104}Cd	-	2E+4	7E-6	2E-8	-	-
		Y, see ^{104}Cd	-	1E+4	6E-6	2E-8	-	-
49	Indium-109	D, all compounds except those given for W	2E+4	4E+4	2E-5	6E-8	3E-4	3E-3
		W, oxides, hydroxides, halides, and nitrates	-	6E+4	3E-5	9E-8	-	-
49	Indium-110[2] (69.1 min)	D, see ^{109}In	2E+4	4E+4	2E-5	6E-8	2E-4	2E-3
		W, see ^{109}In	-	6E+4	2E-5	8E-8	-	-
49	Indium-110 (4.9 h)	D, see ^{109}In	5E+3	2E+4	7E-6	2E-8	7E-5	7E-4
		W, see ^{109}In	-	2E+4	8E-6	3E-8	-	-
49	Indium-111	D, see ^{109}In	4E+3	6E+3	3E-6	9E-9	6E-5	6E-4
		W, see ^{109}In	-	6E+3	3E-6	9E-9	-	-
49	Indium-112[2]	D, see ^{109}In	2E+5	6E+5	3E-4	9E-7	2E-3	2E-2
		W, see ^{109}In	-	7E+5	3E-4	1E-6	-	-
49	Indium-113m[2]	D, see ^{109}In	5E+4	1E+5	6E-5	2E-7	7E-4	7E-3
		W, see ^{109}In	-	2E+5	8E-5	3E-7	-	-
49	Indium-114m	D, see ^{109}In	3E+2	6E+1	3E-8	9E-11	-	-
			LLI wall (4E+2)	-	-	-	5E-6	5E-5
		W, see ^{109}In	-	1E+2	4E-8	1E-10	-	-
49	Indium-115m	D, see ^{109}In	1E+4	4E+4	2E-5	6E-8	2E-4	2E-3
		W, see ^{109}In	-	5E+4	2E-5	7E-8	-	-
49	Indium-115	D, see ^{109}In	4E+1	1E+0	6E-10	2E-12	5E-7	5E-6
		W, see ^{109}In	-	5E+0	2E-9	8E-12	-	-
49	Indium-116m[2]	D, see ^{109}In	2E+4	8E+4	3E-5	1E-7	3E-4	3E-3
		W, see ^{109}In	-	1E+5	5E-5	2E-7	-	-
49	Indium-117m[2]	D, see ^{109}In	1E+4	3E+4	1E-5	5E-8	2E-4	2E-3
		W, see ^{109}In	-	4E+4	2E-5	6E-8	-	-
49	Indium-117[2]	D, see ^{109}In	6E+4	2E+5	7E-5	2E-7	8E-4	8E-3
		W, see ^{109}In	-	2E+5	9E-5	3E-7	-	-
49	Indium-119m[2]	D, see ^{109}In	4E+4	1E+5	5E-5	2E-7	-	-
			St wall (5E+4)	-	-	-	7E-4	7E-3
		W, see ^{109}In	-	1E+5	6E-5	2E-7	-	-
50	Tin-110	D, all compounds except those given for W	4E+3	1E+4	5E-6	2E-8	5E-5	5E-4
		W, sulfides, oxides, hydroxides, halides, nitrates, and stannic phosphate	-	1E+4	5E-6	2E-8	-	-

			Table 1 Occupational Values			Table II Effluent Concentration		Table III Releases to Sewers
			Col. 1 Oral Ingestion	Col. 2 Inhalation	Col. 3 Inhalation	Col. 1	Col. 2	Monthly Average Concen-tration
Atomic No.	Radionuclide	Class	ALI µCi	ALI µCi	DAC µCi/ml	Air µCi/ml	Water µCi/ml	µCi/ml
50	Tin-111[2]	D, see ^{110}Sn	7E+4	2E+5	9E-5	3E-7	1E-3	1E-2
		W, see ^{110}Sn	-	3E+5	1E-4	4E-7	-	-
50	Tin-113	D, see ^{110}Sn	2E+3	1E+3	5E-7	2E-9	-	-
			LLI wall (2E+3)	-	-	-	3E-5	3E-4
		W, see ^{110}Sn	-	5E+2	2E-7	8E-10	-	-
50	Tin-117m	D, see ^{110}Sn	2E+3	1E+3	5E-7	-	-	-
			LLI wall (2E+3)	Bone surf (2E+3)	-	3E-9	3E-5	3E-4
		W, see ^{110}Sn	-	1E+3	6E-7	2E-9	-	-
50	Tin-119m	D, see ^{110}Sn	3E+3	2E+3	1E-6	3E-9	-	-
			LLI wall (4E+3)	-	-	-	6E-5	6E-4
		W, see ^{110}Sn	-	1E+3	4E-7	1E-9	-	-
50	Tin-121m	D, see ^{110}Sn	3E+3	9E+2	4E-7	1E-9	-	-
			LLI wall (4E+3)	-	-	-	5E-5	5E-4
		W, see ^{110}Sn	-	5E+2	2E-7	8E-10	-	-
50	Tin-121	D, see ^{110}Sn	6E+3	2E+4	6E-6	2E-8	-	-
			LLI wall (6E+3)	-	-	-	8E-5	8E-4
		W, see ^{110}Sn	-	1E+4	5E-6	2E-8	-	-
50	Tin-123m[2]	D, see ^{110}Sn	5E+4	1E+5	5E-5	2E-7	7E-4	7E-3
		W, see ^{110}Sn	-	1E+5	6E-5	2E-7	-	-
50	Tin-123	D, see ^{110}Sn	5E+2	6E+2	3E-7	9E-10	-	-
			LLI wall (6E+2)	-	-	-	9E-6	9E-5
		W, see ^{110}Sn	-	2E+2	7E-8	2E-10	-	-
50	Tin-125	D, see ^{110}Sn	4E+2	9E+2	4E-7	1E-9	-	-
			LLI wall (5E+2)	-	-	-	6E-6	6E-5
		W, see ^{110}Sn	-	4E+2	1E-7	5E-10	-	-
50	Tin-126	D, see ^{110}Sn	3E+2	6E+1	2E-8	8E-11	4E-6	4E-5
		W, see ^{110}Sn	-	7E+1	3E-8	9E-11	-	-
50	Tin-127	D, see ^{110}Sn	7E+3	2E+4	8E-6	3E-8	9E-5	9E-4
		W, see ^{110}Sn	-	2E+4	8E-6	3E-8	-	-
50	Tin-128[2]	D, see ^{110}Sn	9E+3	3E+4	1E-5	4E-8	1E-4	1E-3
		W, see ^{110}Sn	-	4E+4	1E-5	5E-8	-	-
51	Antimony-115[2]	D, all compounds except those given for W	8E+4	2E+5	1E-4	3E-7	1E-3	1E-2
		W, oxides, hydroxides, halides, sulfides, sulfates, and nitrates	-	3E+5	1E-4	4E-7	-	-
51	Antimony-116m[2]	D, see ^{115}Sb	2E+4	7E+4	3E-5	1E-7	3E-4	3E-3
		W, see ^{115}Sb	-	1E+5	6E-5	2E-7	-	-
51	Antimony-116[2]	D, see ^{115}Sb	7E+4	3E+5	1E-4	4E-7	-	-
			St wall (9E+4)	-	-	-	1E-3	1E-2
		W, see ^{115}Sb	-	3E+5	1E-4	5E-7	-	-
51	Antimony-117	D, see ^{115}Sb	7E+4	2E+5	9E-5	3E-7	9E-4	9E-3

			Table 1 Occupational Values			Table II Effluent Concentration		Table III Releases to Sewers
			Col. 1 Oral Ingestion	Col. 2 Inhalation	Col. 3 Inhalation	Col. 1	Col. 2	Monthly Average Concen-tration
Atomic No.	Radionuclide	Class	ALI µCi	ALI µCi	DAC µCi/ml	Air µCi/ml	Water µCi/ml	µCi/ml
		W, see ^{115}Sb	-	3E+5	1E-4	4E-7	-	-
51	Antimony-118m	D, see ^{115}Sb	6E+3	2E+4	8E-6	3E-8	7E-5	7E-4
		W, see ^{115}Sb	5E+3	2E+4	9E-6	3E-8	-	-
51	Antimony-119	D, see ^{115}Sb	2E+4	5E+4	2E-5	6E-8	2E-4	2E-3
		W, see ^{115}Sb	2E+4	3E+4	1E-5	4E-8	-	-
51	Antimony-120[2] (16 min)	D, see ^{115}Sb	1E+5	4E+5	2E-4	6E-7	-	-
			St wall (2E+5)	-	-	-	2E-3	2E-2
		W, see ^{115}Sb	-	5E+5	2E-4	7E-7	-	-
51	Antimony-120 (5.76 d)	D, see ^{115}Sb	1E+3	2E+3	9E-7	3E-9	1E-5	1E-4
		W, see ^{115}Sb	9E+2	1E+3	5E-7	2E-9	-	-
51	Antimony-122	D, see ^{115}Sb	8E+2	2E+3	1E-6	3E-9	-	-
			LLI wall (8E+2)	-	-	-	1E-5	1E-4
		W, see ^{115}Sb	7E+2	1E+3	4E-7	2E-9	-	-
51	Antimony-124m[2]	D, see ^{115}Sb	3E+5	8E+5	4E-4	1E-6	3E-3	3E-2
		W, see ^{115}Sb	2E+5	6E+5	2E-4	8E-7	-	-
51	Antimony-124	D, see ^{115}Sb	6E+2	9E+2	4E-7	1E-9	7E-6	7E-5
		W, see ^{115}Sb	5E+2	2E+2	1E-7	3E-10	-	-
51	Antimony-125	D, see ^{115}Sb	2E+3	2E+3	1E-6	3E-9	3E-5	3E-4
		W, see ^{115}Sb	-	5E+2	2E-7	7E-10	-	-
51	Antimony-126m[2]	D, see ^{115}Sb	5E+4	2E+5	8E-5	3E-7	-	-
			St wall (7E+4)	-	-	-	9E-4	9E-3
		W, see ^{115}Sb	-	2E+5	8E-5	3E-7	-	-
51	Antimony-126	D, see ^{115}Sb	6E+2	1E+3	5E-7	2E-9	7E-6	7E-5
		W, see ^{115}Sb	5E+2	5E+2	2E-7	7E-10	-	-
51	Antimony-127	D, see ^{115}Sb	8E+2	2E+3	9E-7	3E-9	-	-
			LLI wall (8E+2)	-	-	-	1E-5	1E-4
		W, see ^{115}Sb	7E+2	9E+2	4E-7	1E-9	-	-
51	Antimony-128[2] (10.4 min)	D, see ^{115}Sb	8E+4	4E+5	2E-4	5E-7	-	-
			St wall (1E+5)	-	-	-	1E-3	1E-2
		W, see ^{115}Sb	-	4E+5	2E-4	6E-7	-	-
51	Antimony-128 (9.01 h)	D, see ^{115}Sb	1E+3	4E+3	2E-6	6E-9	2E-5	2E-4
		W, see ^{115}Sb	-	3E+3	1E-6	5E-9	-	-
51	Antimony-129	D, see ^{115}Sb	3E+3	9E+3	4E-6	1E-8	4E-5	4E-4
		W, see ^{115}Sb	-	9E+3	4E-6	1E-8	-	-
51	Antimony-130[2]	D, see ^{115}Sb	2E+4	6E+4	3E-5	9E-8	3E-4	3E-3
		W, see ^{115}Sb	-	8E+4	3E-5	1E-7	-	-
51	Antimony-131[2]	D, see ^{115}Sb	1E+4	2E+4	1E-5	-	-	-
			Thyroid (2E+4)	Thyroid (4E+4)	-	6E-8	2E-4	2E-3
		W, see ^{115}Sb	-	2E+4	1E-5		-	-
			-	Thyroid (4E+4)	-	6E-8	-	-

			Table 1 Occupational Values			Table II Effluent Concentration		Table III Releases to Sewers
			Col. 1 Oral Ingestion	Col. 2 Inhalation	Col. 3 Inhalation	Col. 1	Col. 2	Monthly Average Concen-tration
Atomic No.	Radionuclide	Class	ALI µCi	ALI µCi	DAC µCi/ml	Air µCi/ml	Water µCi/ml	µCi/ml
52	Tellurium-116	D, all compounds except those given for W	8E+3	2E+4	9E-6	3E-8	1E-4	1E-3
		W, oxides, hydroxides, and nitrates	-	3E+4	1E-5	4E-8	-	-
52	Tellurium-121m	D, see ^{116}Te	5E+2	2E+2	8E-8	-	-	-
			Bone surf (7E+2)	Bone surf (4E+2)	-	5E-10	1E-5	1E-4
		W, see ^{116}Te	-	4E+2	2E-7	6E-10	-	-
52	Tellurium-121	D, see ^{116}Te	3E+3	4E+3	2E-6	6E-9	4E-5	4E-4
		W, see ^{116}Te	-	3E+3	1E-6	4E-9	-	-
52	Tellurium-123m	D, see ^{116}Te	6E+2	2E+2	9E-8	-	-	-
			Bone surf (1E+3)	Bone surf (5E+2)	-	8E-10	1E-5	1E-4
		W, see ^{116}Te	-	5E+2	2E-7	8E-10	-	-
52	Tellurium-123	D, see ^{116}Te	5E+2	2E+2	8E-8	-	-	-
			Bone surf (1E+3)	Bone surf (5E+2)	-	7E-10	2E-5	2E-4
		W, see ^{116}Te	-	4E+2	2E-7	-	-	-
			-	Bone surf (1E+3)	-	2E-9	-	-
52	Tellurium-125m	D, see ^{116}Te	1E+3	4E+2	2E-7	-	-	-
			Bone surf (1E+3)	Bone surf (1E+3)	-	1E-9	2E-5	2E-4
		W, see ^{116}Te	-	7E+2	3E-7	1E-9	-	-
52	Tellurium-127m	D, see ^{116}Te	6E+2	3E+2	1E-7	-	9E-6	9E-5
			-	Bone surf (4E+2)	-	6E-10	-	-
		W, see ^{116}Te	-	3E+2	1E-7	4E-10	-	-
52	Tellurium-127	D, see ^{116}Te	7E+3	2E+4	9E-6	3E-8	1E-4	1E-3
		W, see ^{116}Te	-	2E+4	7E-6	2E-8	-	-
52	Tellurium-129m	D, see ^{116}Te	5E+2	6E+2	3E-7	9E-10	7E-6	7E-5
		W, see ^{116}Te	-	2E+2	1E-7	3E-10	-	-
52	Tellurium-129[2]	D, see ^{116}Te	3E+4	6E+4	3E-5	9E-8	4E-4	4E-3
		W, see ^{116}Te	-	7E+4	3E-5	1E-7	-	-
52	Tellurium-131m	D, see ^{116}Te	3E+2	4E+2	2E-7	-	-	-
			Thyroid (6E+2)	Thyroid (1E+3)	-	2E-9	8E-6	8E-5
		W, see ^{116}Te	-	4E+2	2E-7	-	-	-
			-	Thyroid (9E+2)	-	1E-9	-	-
52	Tellurium-131[2]	D, see ^{116}Te	3E+3	5E+3	2E-6	-	-	-
			Thyroid (6E+3)	Thyroid (1E+4)	-	2E-8	8E-5	8E-4
		W, see ^{116}Te	-	5E+3	2E-6	-	-	-
			-	Thyroid (1E+4)	-	2E-8	-	-
52	Tellurium-132	D, see ^{116}Te	2E+2	2E+2	9E-8	-	-	-
			Thyroid (7E+2)	Thyroid (8E+2)	-	1E-9	9E-6	9E-5
		W, see ^{116}Te	-	2E+2	9E-8	-	-	-
			-	Thyroid (6E+2)	-	9E-10	-	-

			Table 1 Occupational Values			Table II Effluent Concentration		Table III Releases to Sewers
			Col. 1 Oral Ingestion	Col. 2 Inhalation	Col. 3 Inhalation	Col. 1	Col. 2	Monthly Average Concen-tration
Atomic No.	Radionuclide	Class	ALI µCi	ALI µCi	DAC µCi/ml	Air µCi/ml	Water µCi/ml	µCi/ml
52	Tellurium-133m[2]	D, see ^{116}Te	3E+3 Thyroid (6E+3)	5E+3 Thyroid (1E+4)	2E-6 -	2E-8	9E-5	9E-4
		W, see ^{116}Te	- -	5E+3 Thyroid (1E+4)	2E-6 -	2E-8	- -	- -
52	Tellurium-133[2]	D, see ^{116}Te	1E+4 Thyroid (3E+4)	2E+4 Thyroid (6E+4)	9E-6 -	8E-8	4E-4	4E-3
		W, see ^{116}Te	- -	2E+4 Thyroid (6E+4)	9E-6 -	8E-8	- -	- -
52	Tellurium-134[2]	D, see ^{116}Te	2E+4 Thyroid (2E+4)	2E+4 Thyroid (5E+4)	1E-5 -	7E-8	3E-4	3E-3
		W, see ^{116}Te	- -	2E+4 Thyroid (5E+4)	1E-5 -	7E-8	- -	- -
53	Iodine-120m[2]	D, all compounds	1E+4 Thyroid (1E+4)	2E+4 -	9E-6 -	3E-8 -	- 2E-4	- 2E-3
53	Iodine-120[2]	D, all compounds	4E+3 Thyroid (8E+3)	9E+3 Thyroid (1E+4)	4E-6 -	2E-8	1E-4	1E-3
53	Iodine-121	D, all compounds	1E+4 Thyroid (3E+4)	2E+4 Thyroid (5E+4)	8E-6 -	7E-8	4E-4	4E-3
53	Iodine-123	D, all compounds	3E+3 Thyroid (1E+4)	6E+3 Thyroid (2E+4)	3E-6 -	2E-8	1E-4	1E-3
53	Iodine-124	D, all compounds	5E+1 Thyroid (2E+2)	8E+1 Thyroid (3E+2)	3E-8 -	4E-10	2E-6	2E-5
53	Iodine-125	D, all compounds	4E+1 Thyroid (1E+2)	6E+1 Thyroid (2E+2)	3E-8 -	3E-10	2E-6	2E-5
53	Iodine-126	D, all compounds	2E+1 Thyroid (7E+1)	4E+1 Thyroid (1E+2)	1E-8 -	2E-10	1E-6	1E-5
53	Iodine-128[2]	D, all compounds	4E+4 St wall (6E+4)	1E+5 -	5E-5 -	2E-7 -	- 8E-4	- 8E-3
53	Iodine-129	D, all compounds	5E+0 Thyroid (2E+1)	9E+0 Thyroid (3E+1)	4E-9 -	4E-11	2E-7	2E-6
53	Iodine-130	D, all compounds	4E+2 Thyroid (1E+3)	7E+2 Thyroid (2E+3)	3E-7 -	3E-9	2E-5	2E-4
53	Iodine-131	D, all compounds	3E+1 Thyroid (9E+1)	5E+1 Thyroid (2E+2)	2E-8 -	2E-10	1E-6	1E-5
53	Iodine-132m[2]	D, all compounds	4E+3	8E+3	4E-6	-	-	-

			Table 1 Occupational Values			Table II Effluent Concentration		Table III Releases to Sewers
			Col. 1 Oral Ingestion	Col. 2 Inhalation	Col. 3 Inhalation	Col. 1	Col. 2	Monthly Average Concen-tration
Atomic No.	Radionuclide	Class	ALI µCi	ALI µCi	DAC µCi/ml	Air µCi/ml	Water µCi/ml	µCi/ml
			Thyroid (1E+4)	Thyroid (2E+4)	-	3E-8	1E-4	1E-3
53	Iodine-132	D, all compounds	4E+3	8E+3	3E-6	-	-	-
			Thyroid (9E+3)	Thyroid (1E+4)	-	2E-8	1E-4	1E-3
53	Iodine-133	D, all compounds	1E+2	3E+2	1E-7	-	-	-
			Thyroid (5E+2)	Thyroid (9E+2)	-	1E-9	7E-6	7E-5
53	Iodine-134[2]	D, all compounds	2E+4	5E+4	2E-5	6E-8	-	-
			Thyroid (3E+4)	-	-	-	4E-4	4E-3
53	Iodine-135	D, all compounds	8E+2	2E+3	7E-7	-	-	-
			Thyroid (3E+3)	Thyroid (4E+3)	-	6E-9	3E-5	3E-4
54	Xenon-120[2]	Submersion[1]	-	-	1E-5	4E-8	-	-
54	Xenon-121[2]	Submersion[1]	-	-	2E-6	1E-8	-	-
54	Xenon-122	Submersion[1]	-	-	7E-5	3E-7	-	-
54	Xenon-123	Submersion[1]	-	-	6E-6	3E-8	-	-
54	Xenon-125	Submersion[1]	-	-	2E-5	7E-8	-	-
54	Xenon-127	Submersion[1]	-	-	1E-5	6E-8	-	-
54	Xenon-129m	Submersion[1]	-	-	2E-4	9E-7	-	-
54	Xenon-131m	Submersion[1]	-	-	4E-4	2E-6	-	-
54	Xenon-133m	Submersion[1]	-	-	1E-4	6E-7	-	-
54	Xenon-133	Submersion[1]	-	-	1E-4	5E-7	-	-
54	Xenon-135m[2]	Submersion[1]	-	-	9E-6	4E-8	-	-
54	Xenon-135	Submersion[1]	-	-	1E-5	7E-8	-	-
54	Xenon-138[2]	Submersion[1]	-	-	4E-6	2E-8	-	-
55	Cesium-125[2]	D, all compounds	5E+4	1E+5	6E-5	2E-7	-	-
			St wall (9E+4)	-	-	-	1E-3	1E-2
55	Cesium-127	D, all compounds	6E+4	9E+4	4E-5	1E-7	9E-4	9E-3
55	Cesium-129	D, all compounds	2E+4	3E+4	1E-5	5E-8	3E-4	3E-3
55	Cesium-130[2]	D, all compounds	6E+4	2E+5	8E-5	3E-7	-	-
			St wall (1E+5)	-	-	-	1E-3	1E-2
55	Cesium-131	D, all compounds	2E+4	3E+4	1E-5	4E-8	3E-4	3E-3
55	Cesium-132	D, all compounds	3E+3	4E+3	2E-6	6E-9	4E-5	4E-4
55	Cesium-134m	D, all compounds	1E+5	1E+5	6E-5	2E-7	-	-
			St wall (1E+5)	-	-	-	2E-3	2E-2
55	Cesium-134	D, all compounds	7E+1	1E+2	4E-8	2E-10	9E-7	9E-6

			Table 1 Occupational Values			Table II Effluent Concentration		Table III Releases to Sewers
			Col. 1 Oral Ingestion	Col. 2 Inhalation	Col. 3 Inhalation	Col. 1	Col. 2	Monthly Average Concen-tration
Atomic No.	Radionuclide	Class	ALI µCi	ALI µCi	DAC µCi/ml	Air µCi/ml	Water µCi/ml	µCi/ml
55	Cesium-135m[2]	D, all compounds	1E+5	2E+5	8E-5	3E-7	1E-3	1E-2
55	Cesium-135	D, all compounds	7E+2	1E+3	5E-7	2E-9	1E-5	1E-4
55	Cesium-136	D, all compounds	4E+2	7E+2	3E-7	9E-10	6E-6	6E-5
55	Cesium-137	D, all compounds	1E+2	2E+2	6E-8	2E-10	1E-6	1E-5
55	Cesium-138[2]	D, all compounds	2E+4	6E+4	2E-5	8E-8	-	-
			St wall (3E+4)	-	-	-	4E-4	4E-3
56	Barium-126[2]	D, all compounds	6E+3	2E+4	6E-6	2E-8	8E-5	8E-4
56	Barium-128	D, all compounds	5E+2	2E+3	7E-7	2E-9	7E-6	7E-5
56	Barium-131m[2]	D, all compounds	4E+5	1E+6	6E-4	2E-6	-	-
			St wall (5E+5)	-	-	-	7E-3	7E-2
56	Barium-131	D, all compounds	3E+3	8E+3	3E-6	1E-8	4E-5	4E-4
56	Barium-133m	D, all compounds	2E+3	9E+3	4E-6	1E-8	-	-
			LLI wall (3E+3)	-	-	-	4E-5	4E-4
56	Barium-133	D, all compounds	2E+3	7E+2	3E-7	9E-10	2E-5	2E-4
56	Barium-135m	D, all compounds	3E+3	1E+4	5E-6	2E-8	4E-5	4E-4
56	Barium-139[2]	D, all compounds	1E+4	3E+4	1E-5	4E-8	2E-4	2E-3
56	Barium-140	D, all compounds	5E+2	1E+3	6E-7	2E-9	-	-
			LLI wall (6E+2)	-	-	-	8E-6	8E-5
56	Barium-141[2]	D, all compounds	2E+4	7E+4	3E-5	1E-7	3E-4	3E-3
56	Barium-142[2]	D, all compounds	5E+4	1E+5	6E-5	2E-7	7E-4	7E-3
57	Lanthanum-131[2]	D, all compounds except those given for W	5E+4	1E+5	5E-5	2E-7	6E-4	6E-3
		W, oxides and hydroxides	-	2E+5	7E-5	2E-7	-	-
57	Lanthanum-132	D, see ^{131}La	3E+3	1E+4	4E-6	1E-8	4E-5	4E-4
		W, see ^{131}La	-	1E+4	5E-6	2E-8	-	-
57	Lanthanum-135	D, see ^{131}La	4E+4	1E+5	4E-5	1E-7	5E-4	5E-3
		W, see ^{131}La	-	9E+4	4E-5	1E-7	-	-
57	Lanthanum-137	D, see ^{131}La	1E+4	6E+1	3E-8	-	2E-4	2E-3
			-	Liver (7E+1)	-	1E-10	-	-
		W, see ^{131}La	-	3E+2	1E-7	-	-	-
			-	Liver (3E+2)	-	4E-10	-	-
57	Lanthanum-138	D, see ^{131}La	9E+2	4E+0	1E-9	5E-12	1E-5	1E-4
		W, see ^{131}La	-	1E+1	6E-9	2E-11	-	-
57	Lanthanum-140	D, see ^{131}La	6E+2	1E+3	6E-7	2E-9	9E-6	9E-5
		W, see ^{131}La	-	1E+3	5E-7	2E-9	-	-
57	Lanthanum-141	D, see ^{131}La	4E+3	9E+3	4E-6	1E-8	5E-5	5E-4
		W, see ^{131}La	-	1E+4	5E-6	2E-8	-	-

			Table 1 Occupational Values			Table II Effluent Concentration		Table III Releases to Sewers
			Col. 1 Oral Ingestion	Col. 2 Inhalation	Col. 3 Inhalation	Col. 1	Col. 2	Monthly Average Concen-tration
Atomic No.	Radionuclide	Class	ALI µCi	ALI µCi	DAC µCi/ml	Air µCi/ml	Water µCi/ml	µCi/ml
57	Lanthanum-142[2]	D, see ^{131}La	8E+3	2E+4	9E-6	3E-8	1E-4	1E-3
		W, see ^{131}La	-	3E+4	1E-5	5E-8	-	-
57	Lanthanum-143[2]	D, see ^{131}La	4E+4	1E+5	4E-5	1E-7	-	-
			St wall (4E+4)	-	-	-	5E-4	5E-3
		W, see ^{131}La	-	9E+4	4E-5	1E-7	-	-
58	Cerium-134	W, all compounds except those given for Y	5E+2	7E+2	3E-7	1E-9	-	-
			LLI wall (6E+2)	-	-	-	8E-6	8E-5
		Y, oxides, hydroxides, and fluorides	-	7E+2	3E-7	9E-10	-	-
58	Cerium-135	W, see ^{134}Ce	2E+3	4E+3	2E-6	5E-9	2E-5	2E-4
		Y, see ^{134}Ce	-	4E+3	1E-6	5E-9	-	-
58	Cerium-137m	W, see ^{134}Ce	2E+3	4E+3	2E-6	6E-9	-	-
			LLI wall (2E+3)	-	-	-	3E-5	3E-4
		Y, see ^{134}Ce	-	4E+3	2E-6	5E-9	-	-
58	Cerium-137	W, see ^{134}Ce	5E+4	1E+5	6E-5	2E-7	7E-4	7E-3
		Y, see ^{134}Ce	-	1E+5	5E-5	2E-7	-	-
58	Cerium-139	W, see ^{134}Ce	5E+3	8E+2	3E-7	1E-9	7E-5	7E-4
		Y, see ^{134}Ce	-	7E+2	3E-7	9E-10	-	-
58	Cerium-141	W, see ^{134}Ce	2E+3	7E+2	3E-7	1E-9	-	-
			LLI wall (2E+3)	-	-	-	3E-5	3E-4
		Y, see ^{134}Ce	-	6E+2	2E-7	8E-10	-	-
58	Cerium-143	W, see ^{134}Ce	1E+3	2E+3	8E-7	3E-9	-	-
			LLI wall (1E+3)	-	-	-	2E-5	2E-4
		Y, see ^{134}Ce	-	2E+3	7E-7	2E-9	-	-
58	Cerium-144	W, see ^{134}Ce	2E+2	3E+1	1E-8	4E-11	-	-
			LLI wall (3E+2)	-	-	-	3E-6	3E-5
		Y, see ^{134}Ce	-	1E+1	6E-9	2E-11	-	-
59	Praseodymium-136[2]	W, all compounds except those given for Y	5E+4	2E+5	1E-4	3E-7	-	-
			St wall (7E+4)	-	-	-	1E-3	1E-2
		Y, oxides, hydroxides, carbides, and fluorides	-	2E+5	9E-5	3E-7	-	-
59	Praseodymium-137[2]	W, see ^{136}Pr	4E+4	2E+5	6E-5	2E-7	5E-4	5E-3
		Y, see ^{136}Pr	-	1E+5	6E-5	2E-7	-	-
59	Praseodymium-138m	W, see ^{136}Pr	1E+4	5E+4	2E-5	8E-8	1E-4	1E-3
		Y, see ^{136}Pr	-	4E+4	2E-5	6E-8	-	-
59	Praseodymium-139	W, see ^{136}Pr	4E+4	1E+5	5E-5	2E-7	6E-4	6E-3
		Y, see ^{136}Pr	-	1E+5	5E-5	2E-7	-	-
59	Praseodymium-142m[2]	W, see ^{136}Pr	8E+4	2E+5	7E-5	2E-7	1E-3	1E-2
		Y, see ^{136}Pr	-	1E+5	6E-5	2E-7	-	-
59	Praseodymium-142	W, see ^{136}Pr	1E+3	2E+3	9E-7	3E-9	1E-5	1E-4
		Y, see ^{136}Pr	-	2E+3	8E-7	3E-9	-	-

			Table 1 Occupational Values			Table II Effluent Concentration		Table III Releases to Sewers
			Col. 1 Oral Ingestion	Col. 2 Inhalation	Col. 3 Inhalation	Col. 1	Col. 2	Monthly Average Concen-tration
Atomic No.	Radionuclide	Class	ALI µCi	ALI µCi	DAC µCi/ml	Air µCi/ml	Water µCi/ml	µCi/ml
59	Praseodymium-143	W, see ^{136}Pr	9E+2	8E+2	3E-7	1E-9	-	-
			LLI wall (1E+3)	-	-	-	2E-5	2E-4
		Y, see ^{136}Pr	-	7E+2	3E-7	9E-10	-	-
59	Praseodymium-144[2]	W, see ^{136}Pr	3E+4	1E+5	5E-5	2E-7	-	-
			St wall (4E+4)	-	-	-	6E-4	6E-3
		Y, see ^{136}Pr	-	1E+5	5E-5	2E-7	-	-
59	Praseodymium-145	W, see ^{136}Pr	3E+3	9E+3	4E-6	1E-8	4E-5	4E-4
		Y, see ^{136}Pr	-	8E+3	3E-6	1E-8	-	-
59	Praseodymium-147[2]	W, see ^{136}Pr	5E+4	2E+5	8E-5	3E-7	-	-
			St wall (8E+4)	-	-	-	1E-3	1E-2
		Y, see ^{136}Pr	-	2E+5	8E-5	3E-7	-	-
60	Neodymium-136[2]	W, all compounds except those given for Y	1E+4	6E+4	2E-5	8E-8	2E-4	2E-3
		Y, oxides, hydroxides, carbides, and fluorides	-	5E+4	2E-5	8E-8	-	-
60	Neodymium-138	W, see ^{136}Nd	2E+3	6E+3	3E-6	9E-9	3E-5	3E-4
		Y, see ^{136}Nd	-	5E+3	2E-6	7E-9	-	-
60	Neodymium-139m	W, see ^{136}Nd	5E+3	2E+4	7E-6	2E-8	7E-5	7E-4
		Y, see ^{136}Nd	-	1E+4	6E-6	2E-8	-	-
60	Neodymium-139[2]	W, see ^{136}Nd	9E+4	3E+5	1E-4	5E-7	1E-3	1E-2
		Y, see ^{136}Nd	-	3E+5	1E-4	4E-7	-	-
60	Neodymium-141	W, see ^{136}Nd	2E+5	7E+5	3E-4	1E-6	2E-3	2E-2
		Y, see ^{136}Nd	-	6E+5	3E-4	9E-7	-	-
60	Neodymium-147	W, see ^{136}Nd	1E+3	9E+2	4E-7	1E-9	-	-
			LLI wall (1E+3)	-	-	-	2E-5	2E-4
		Y, see ^{136}Nd	-	8E+2	4E-7	1E-9	-	-
60	Neodymium-149[2]	W, see ^{136}Nd	1E+4	3E+4	1E-5	4E-8	1E-4	1E-3
		Y, see ^{136}Nd	-	2E+4	1E-5	3E-8	-	-
60	Neodymium-151[2]	W, see ^{136}Nd	7E+4	2E+5	8E-5	3E-7	9E-4	9E-3
		Y, see ^{136}Nd	-	2E+5	8E-5	3E-7	-	-
61	Promethium-141[2]	W, all compounds except those given for Y	5E+4	2E+5	8E-5	3E-7	-	-
			St wall (6E+4)	-	-	-	8E-4	8E-3
		Y, oxides, hydroxides, carbides, and fluorides	-	2E+5	7E-5	2E-7	-	-
61	Promethium-143	W, see ^{141}Pm	5E+3	6E+2	2E-7	8E-10	7E-5	7E-4
		Y, see ^{141}Pm	-	7E+2	3E-7	1E-9	-	-
61	Promethium-144	W, see ^{141}Pm	1E+3	1E+2	5E-8	2E-10	2E-5	2E-4
		Y, see ^{141}Pm	-	1E+2	5E-8	2E-10	-	-
61	Promethium-145	W, see ^{141}Pm	1E+4	2E+2	7E-8	-	1E-4	1E-3
			-	Bone surf (2E+2)	-	3E-10	-	-
		Y, see ^{141}Pm	-	2E+2	8E-8	3E-10	-	-
61	Promethium-146	W, see ^{141}Pm	2E+3	5E+1	2E-8	7E-11	2E-5	2E-4

			Table 1 Occupational Values			Table II Effluent Concentration		Table III Releases to Sewers
			Col. 1 Oral Ingestion	Col. 2 Inhalation	Col. 3 Inhalation	Col. 1	Col. 2	Monthly Average Concen-tration
Atomic No.	Radionuclide	Class	ALI µCi	ALI µCi	DAC µCi/ml	Air µCi/ml	Water µCi/ml	µCi/ml
		Y, see ^{141}Pm	-	4E+1	2E-8	6E-11	-	-
61	Promethium-147	W, see ^{141}Pm	4E+3	1E+2	5E-8	-	-	-
			LLI wall (5E+3)	Bone surf (2E+2)	-	3E-10	7E-5	7E-4
		Y, see ^{141}Pm	-	1E+2	6E-8	2E-10	-	-
61	Promethium-148m	W, see ^{141}Pm	7E+2	3E+2	1E-7	4E-10	1E-5	1E-4
		Y, see ^{141}Pm	-	3E+2	1E-7	5E-10	-	-
61	Promethium-148	W, see ^{141}Pm	4E+2	5E+2	2E-7	8E-10	-	-
			LLI wall (5E+2)	-	-	-	7E-6	7E-5
		Y, see ^{141}Pm	-	5E+2	2E-7	7E-10	-	-
61	Promethium-149	W, see ^{141}Pm	1E+3	2E+3	8E-7	3E-9	-	-
			LLI wall (1E+3)	-	-	-	2E-5	2E-4
		Y, see ^{141}Pm	-	2E+3	8E-7	2E-9	-	-
61	Promethium-150	W, see ^{141}Pm	5E+3	2E+4	8E-6	3E-8	7E-5	7E-4
		Y, see ^{141}Pm	-	2E+4	7E-6	2E-8	-	-
61	Promethium-151	W, see ^{141}Pm	2E+3	4E+3	1E-6	5E-9	2E-5	2E-4
		Y, see ^{141}Pm	-	3E+3	1E-6	4E-9	-	-
62	Samarium-141m[2]	W, all compounds	3E+4	1E+5	4E-5	1E-7	4E-4	4E-3
62	Samarium-141[2]	W, all compounds	5E+4	2E+5	8E-5	2E-7	-	-
			St wall (6E+4)	-	-	-	8E-4	8E-3
62	Samarium-142[2]	W, all compounds	8E+3	3E+4	1E-5	4E-8	1E-4	1E-3
62	Samarium-145	W, all compounds	6E+3	5E+2	2E-7	7E-10	8E-5	8E-4
62	Samarium-146	W, all compounds	1E+1	4E-2	1E-11	-	-	-
			Bone surf (3E+1)	Bone surf (6E-2)	-	9E-14	3E-7	3E-6
62	Samarium-147	W, all compounds	2E+1	4E-2	2E-11	-	-	-
			Bone surf (3E+1)	Bone surf (7E-2)	-	1E-13	4E-7	4E-6
62	Samarium-151	W, all compounds	1E+4	1E+2	4E-8	-	-	-
			LLI wall (1E+4)	Bone surf (2E+2)	-	2E-10	2E-4	2E-3
62	Samarium-153	W, all compounds	2E+3	3E+3	1E-6	4E-9	-	-
			LLI wall (2E+3)	-	-	-	3E-5	3E-4
62	Samarium-155[2]	W, all compounds	6E+4	2E+5	9E-5	3E-7	-	-
			St wall (8E+4)	-	-	-	1E-3	1E-2
62	Samarium-156	W, all compounds	5E+3	9E+3	4E-6	1E-8	7E-5	7E-4
63	Europium-145	W, all compounds	2E+3	2E+3	8E-7	3E-9	2E-5	2E-4
63	Europium-146	W, all compounds	1E+3	1E+3	5E-7	2E-9	1E-5	1E-4
63	Europium-147	W, all compounds	3E+3	2E+3	7E-7	2E-9	4E-5	4E-4
63	Europium-148	W, all compounds	1E+3	4E+2	1E-7	5E-10	1E-5	1E-4

			Table 1 Occupational Values			Table II Effluent Concentration		Table III Releases to Sewers
			Col. 1 Oral Ingestion	Col. 2 Inhalation	Col. 3 Inhalation	Col. 1	Col. 2	Monthly Average Concen-tration
Atomic No.	Radionuclide	Class	ALI µCi	ALI µCi	DAC µCi/ml	Air µCi/ml	Water µCi/ml	µCi/ml
63	Europium-149	W, all compounds	1E+4	3E+3	1E-6	4E-9	2E-4	2E-3
63	Europium-150 (12.62h)	W, all compounds	3E+3	8E+3	4E-6	1E-8	4E-5	4E-4
63	Europium-150 (34.2 y)	W, all compounds	8E+2	2E+1	8E-9	3E-11	1E-5	1E-4
63	Europium-152m	W, all compounds	3E+3	6E+3	3E-6	9E-9	4E-5	4E-4
63	Europium-152	W, all compounds	8E+2	2E+1	1E-8	3E-11	1E-5	1E-4
63	Europium-154	W, all compounds	5E+2	2E+1	8E-9	3E-11	7E-6	7E-5
63	Europium-155	W, all compounds	4E+3	9E+1	4E-8	-	5E-5	5E-4
			-	Bone surf (1E+2)	-	2E-10	-	-
63	Europium-156	W, all compounds	6E+2	5E+2	2E-7	6E-10	8E-6	8E-5
63	Europium-157	W, all compounds	2E+3	5E+3	2E-6	7E-9	3E-5	3E-4
63	Europium-158[2]	W, all compounds	2E+4	6E+4	2E-5	8E-8	3E-4	3E-3
64	Gadolinium-145[2]	D, all compounds except those given for W	5E+4	2E+5	6E-5	2E-7	-	-
			St wall (5E+4)	-	-	-	6E-4	6E-3
		W, oxides, hydroxides, and fluorides	-	2E+5	7E-5	2E-7	-	-
64	Gadolinium-146	D, see ^{145}Gd	1E+3	1E+2	5E-8	2E-10	2E-5	2E-4
		W, see ^{145}Gd	-	3E+2	1E-7	4E-10	-	-
64	Gadolinium-147	D, see ^{145}Gd	2E+3	4E+3	2E-6	6E-9	3E-5	3E-4
		W, see ^{145}Gd	-	4E+3	1E-6	5E-9	-	-
64	Gadolinium-148	D, see ^{145}Gd	1E+1	8E+3	3E-12	-	-	-
			Bone surf (2E+1)	Bone surf (2E+2)	-	2E-14	3E-7	3E-6
		W, see ^{145}Gd	-	3E-2	1E-11	-	-	-
			-	Bone surf (6E-2)	-	8E-14	-	-
64	Gadolinium-149	D, see ^{145}Gd	3E+3	2E+3	9E-7	3E-9	4E-5	4E-4
		W, see ^{145}Gd	-	2E+3	1E-6	3E-9	-	-
64	Gadolinium-151	D, see ^{145}Gd	6E+3	4E+2	2E-7	-	9E-5	9E-4
			-	Bone surf (6E+2)	-	9E-10	-	-
		W, see ^{145}Gd	-	1E+3	5E-7	2E-9	-	-
64	Gadolinium-152	D, see ^{145}Gd	2E+1	1E-2	4E-12	-	-	-
			Bone surf (3E+1)	Bone surf (2E-2)	-	3E-14	4E-7	4E-6
		W, see ^{145}Gd	-	4E-2	2E-11	-	-	-
			-	Bone surf (8E-2)	-	1E-13	-	-
64	Gadolinium-153	D, see ^{145}Gd	5E+3	1E+2	6E-8	-	6E-5	6E-4
			-	Bone surf (2E+2)	-	3E-10	-	-
		W, see ^{145}Gd	-	6E+2	2E-7	8E-10	-	-
64	Gadolinium-159	D, see ^{145}Gd	3E+3	8E+3	3E-6	1E-8	4E-5	4E-4
		W, see ^{145}Gd	-	6E+3	2E-6	8E-9	-	-

			Table 1 Occupational Values			Table II Effluent Concentration		Table III Releases to Sewers
			Col. 1 Oral Ingestion	Col. 2 Inhalation	Col. 3 Inhalation	Col. 1	Col. 2	Monthly Average Concen-tration
Atomic No.	Radionuclide	Class	ALI µCi	ALI µCi	DAC µCi/ml	Air µCi/ml	Water µCi/ml	µCi/ml
65	Terbium-147[2]	W, all compounds	9E+3	3E+4	1E-5	5E-8	1E-4	1E-3
65	Terbium-149	W, all compounds	5E+3	7E+2	3E-7	1E-9	7E-5	7E-4
65	Terbium-150	W, all compounds	5E+3	2E+4	9E-6	3E-8	7E-5	7E-4
65	Terbium-151	W, all compounds	4E+3	9E+3	4E-6	1E-8	5E-5	5E-4
65	Terbium-153	W, all compounds	5E+3	7E+3	3E-6	1E-8	7E-5	7E-4
65	Terbium-154	W, all compounds	2E+3	4E+3	2E-6	6E-9	2E-5	2E-4
65	Terbium-155	W, all compounds	6E+3	8E+3	3E-6	1E-8	8E-5	8E-4
65	Terbium-156m (5.0 h)	W, all compounds	2E+4	3E+4	1E-5	4E-8	2E-4	2E-3
65	Terbium-156m (24.4 h)	W, all compounds	7E+3	8E+3	3E-6	1E-8	1E-4	1E-3
65	Terbium-156	W, all compounds	1E+3	1E+3	6E-7	2E-9	1E-5	1E-4
65	Terbium-157	W, all compounds	5E+4	3E+2	1E-7	-	-	-
			LLI wall (5E+4)	Bone surf (6E+2)	-	8E-10	7E-4	7E-3
65	Terbium-158	W, all compounds	1E+3	2E+1	8E-9	3E-11	2E-5	2E-4
65	Terbium-160	W, all compounds	8E+2	2E+2	9E-8	3E-10	1E-5	1E-4
65	Terbium-161	W, all compounds	2E+3	2E+3	7E-7	2E-9	-	-
			LLI wall (2E+3)	-	-	-	3E-5	3E-4
66	Dysprosium-155	W, all compounds	9E+3	3E+4	1E-5	4E-8	1E-4	1E-3
66	Dysprosium-157	W, all compounds	2E+4	6E+4	3E-5	9E-8	3E-4	3E-3
66	Dysprosium-159	W, all compounds	1E+4	2E+3	1E-6	3E-9	2E-4	2E-3
66	Dysprosium-165	W, all compounds	1E+4	5E+4	2E-5	6E-8	2E-4	2E-3
66	Dysprosium-166	W, all compounds	6E+2	7E+2	3E-7	1E-9	-	-
			LLI wall (8E+2)	-	-	-	1E-5	1E-4
67	Holmium-155[2]	W, all compounds	4E+4	2E+5	6E-5	2E-7	6E-4	6E-3
67	Holmium-157[2]	W, all compounds	3E+5	1E+6	6E-4	2E-6	4E-3	4E-2
67	Holmium-159[2]	W, all compounds	2E+5	1E+6	4E-4	1E-6	3E-3	3E-2
67	Holmium-161	W, all compounds	1E+5	4E+5	2E-4	6E-7	1E-3	1E-2
67	Holmium-162m[2]	W, all compounds	5E+4	3E+5	1E-4	4E-7	7E-4	7E-3
67	Holmium-162[2]	W, all compounds	5E+5	2E+6	1E-3	3E-6	-	-
			St wall (8E+5)	-	-	-	1E-2	1E-1
67	Holmium-164m[2]	W, all compounds	1E+5	3E+5	1E-4	4E-7	1E-3	1E-2
67	Holmium-164[2]	W, all compounds	2E+5	6E+5	3E-4	9E-7	-	-
			St wall (2E+5)	-	-	-	3E-3	3E-2

			Table 1 Occupational Values			Table II Effluent Concentration		Table III Releases to Sewers
			Col. 1 Oral Ingestion	Col. 2 Inhalation	Col. 3 Inhalation	Col. 1	Col. 2	Monthly Average Concen-tration
Atomic No.	Radionuclide	Class	ALI µCi	ALI µCi	DAC µCi/ml	Air µCi/ml	Water µCi/ml	µCi/ml
67	Holmium-166m	W, all compounds	6E+2	7E+0	3E-9	9E-12	9E-6	9E-5
67	Holmium-166	W, all compounds	9E+2	2E+3	7E-7	2E-9	-	-
			LLI wall (9E+2)	-	-	-	1E-5	1E-4
67	Holmium-167	W, all compounds	2E+4	6E+4	2E-5	8E-8	2E-4	2E-3
68	Erbium-161	W, all compounds	2E+4	6E+4	3E-5	9E-8	2E-4	2E-3
68	Erbium-165	W, all compounds	6E+4	2E+5	8E-5	3E-7	9E-4	9E-3
68	Erbium-169	W, all compounds	3E+3	3E+3	1E-6	4E-9	-	-
			LLI wall (4E+3)	-	-	-	5E-5	5E-4
68	Erbium-171	W, all compounds	4E+3	1E+4	4E-6	1E-8	5E-5	5E-4
68	Erbium-172	W, all compounds	1E+3	1E+3	6E-7	2E-9	-	-
			LLI wall (E+3)	-	-	-	2E-5	2E-4
69	Thulium-162[2]	W, all compounds	7E+4	3E+5	1E-4	4E-7	-	-
			St wall (7E+4)	-	-	-	1E-3	1E-2
69	Thulium-166	W, all compounds	4E+3	1E+4	6E-6	2E-8	6E-5	6E-4
69	Thulium-167	W, all compounds	2E+3	2E+3	8E-7	3E-9	-	-
			LLI wall (2E+3)	-	-	-	3E-5	3E-4
69	Thulium-170	W, all compounds	8E+2	2E+2	9E-8	3E-10	-	-
			LLI wall (1E+3)	-	-	-	1E-5	1E-4
69	Thulium-171	W, all compounds	1E+4	3E+2	1E-7	-	-	-
			LLI wall (1E+4)	Bone surf (6E+2)	-	8E-10	2E-4	2E-3
69	Thulium-172	W, all compounds	7E+2	1E+3	5E-7	2E-9	-	-
			LLI wall (8E+2)	-	-	-	1E-5	1E-4
69	Thulium-173	W, all compounds	4E+3	1E+4	5E-6	2E-8	6E-5	6E-4
69	Thulium-175[2]	W, all compounds	7E+4	3E+5	1E-4	4E-7	-	-
			St wall (9E+4)	-	-	-	1E-3	1E-2
70	Ytterbium-162[2]	W, all compounds except those given for Y	7E+4	3E+5	1E-4	4E-7	1E-3	1E-2
		Y, oxides, hydroxides, and fluorides	-	3E+5	1E-4	4E-7	-	-
70	Ytterbium-166	W, see ^{162}Yb	1E+3	2E+3	8E-7	3E-9	2E-5	2E-4
		Y, see ^{162}Yb	-	2E+3	8E-7	3E-9	-	-
70	Ytterbium-167[2]	W, see ^{162}Yb	3E+5	8E+5	3E-4	1E-6	4E-3	4E-2
		Y, see ^{162}Yb	-	7E+5	3E-4	1E-6	-	-
70	Ytterbium-169	W, see ^{162}Yb	2E+3	8E+2	4E-7	1E-9	2E-5	2E-4
		Y, see ^{162}Yb	-	7E+2	3E-7	1E-9	-	-
70	Ytterbium-175	W, see ^{162}Yb	3E+3	4E+3	1E-6	5E-9	-	-

			Table 1 Occupational Values			Table II Effluent Concentration		Table III Releases to Sewers
			Col. 1 Oral Ingestion	Col. 2 Inhalation	Col. 3 Inhalation	Col. 1	Col. 2	Monthly Average Concen-tration
Atomic No.	Radionuclide	Class	ALI µCi	ALI µCi	DAC µCi/ml	Air µCi/ml	Water µCi/ml	µCi/ml
			LLI wall (3E+3)	-	-	-	4E-5	4E-4
		Y, see ^{162}Yb	-	3E+3	1E-6	5E-9	-	-
70	Ytterbium-177[2]	W, see ^{162}Yb	2E+4	5E+4	2E-5	7E-8	2E-4	2E-3
		Y, see ^{162}Yb	-	5E+4	2E-5	6E-8	-	-
70	Ytterbium-178[2]	W, see ^{162}Yb	1E+4	4E+4	2E-5	6E-8	2E-4	2E-3
		Y, see ^{162}Yb	-	4E+4	2E-5	5E-8	-	-
71	Lutetium-169	W, all compounds except those given for Y	3E+3	4E+3	2E-6	6E-9	3E-5	3E-4
		Y, oxides, hydroxides, and fluorides	-	4E+3	2E-6	6E-9	-	-
71	Lutetium-170	W, see ^{169}Lu	1E+3	2E+3	9E-7	3E-9	2E-5	2E-4
		Y, see ^{169}Lu	-	2E+3	8E-7	3E-9	-	-
71	Lutetium-171	W, see ^{169}Lu	2E+3	2E+3	8E-7	3E-9	3E-5	3E-4
		Y, see ^{169}Lu	-	2E+3	8E-7	3E-9	-	-
71	Lutetium-172	W, see ^{169}Lu	1E+3	1E+3	5E-7	2E-9	1E-5	1E-4
		Y, see ^{169}Lu	-	1E+3	5E-7	2E-9	-	-
71	Lutetium-173	W, see ^{169}Lu	5E+3	3E+2	1E-7	-	7E-5	7E-4
			-	Bone surf (5E+2)	-	6E-10	-	-
		Y, see ^{169}Lu	-	3E+2	1E-7	4E-10	-	-
71	Lutetium-174m	W, see ^{169}Lu	2E+3	2E+2	1E-7	-	-	-
			LLI wall (3E+3)	Bone surf (3E+2)	-	5E-10	4E-5	4E-4
		Y, see ^{169}Lu	-	2E+2	9E-8	3E-10	-	-
71	Lutetium-174	W, see ^{169}Lu	5E+3	1E+2	5E-8	-	7E-5	7E-4
			-	Bone surf (2E+2)	-	3E-10	-	-
		Y, see ^{169}Lu	-	2E+2	6E-8	2E-10	-	-
71	Lutetium-176m	W, see ^{169}Lu	8E+3	3E+4	1E-5	3E-8	1E-4	1E-3
		Y, see ^{169}Lu	-	2E+4	9E-6	3E-8	-	-
71	Lutetium-176	W, see ^{169}Lu	7E+2	5E+0	2E-9	-	1E-5	1E-4
			-	Bone surf (1E+1)	-	2E-11	-	-
		Y, see ^{169}Lu	-	8E+0	3E-9	1E-11	-	-
71	Lutetium-177m	W, see ^{169}Lu	7E+2	1E+2	5E-8	-	1E-5	1E-4
			-	Bone surf (1E+2)	-	2E-10	-	-
		Y, see ^{169}Lu	-	8E+1	3E-8	1E-10	-	-
71	Lutetium-177	W, see ^{169}Lu	2E+3	2E+3	9E-7	3E-9	-	-
			LLI wall (3E+3)	-	-	-	4E-5	4E-4
		Y, see ^{169}Lu	-	2E+3	9E-7	3E-9	-	-
71	Lutetium-178m[2]	W, see ^{169}Lu	5E+4	2E+5	8E-5	3E-7	-	-
			St. wall (6E+4)	-	-	-	8E-4	8E-3
		Y, see ^{169}Lu	-	2E+5	7E-5	2E-7	-	-
71	Lutetium-178[2]	W, see ^{169}Lu	4E+4	1E+5	5E-5	2E-7	-	-
			St wall (4E+4)	-	-	-	6E-4	6E-3

			Table 1 Occupational Values			Table II Effluent Concentration		Table III Releases to Sewers
			Col. 1 Oral Ingestion	Col. 2 Inhalation	Col. 3 Inhalation	Col. 1	Col. 2	Monthly Average Concen-tration
Atomic No.	Radionuclide	Class	ALI µCi	ALI µCi	DAC µCi/ml	Air µCi/ml	Water µCi/ml	µCi/ml
		Y, see ^{169}Lu	-	1E+5	5E-5	2E-7	-	-
71	Lutetium-179	W, see ^{169}Lu	6E+3	2E+4	8E-6	3E-8	9E-5	9E-4
		Y, see ^{169}Lu	-	2E+4	6E-6	3E-8	-	-
72	Hafnium-170	D, all compounds except those given for W	3E+3	6E+3	2E-6	8E-9	4E-5	4E-4
		W, oxides, hydroxides, carbides, and nitrates	-	5E+3	2E-6	6E-9	-	-
72	Hafnium-172	D, see ^{170}Hf	1E+3	9E+0	4E-9	-	2E-5	2E-4
			-	Bone surf (2E+1)	-	3E-11	-	-
		W, see ^{170}Hf	-	4E+1	2E-8	-	-	-
			-	Bone surf (6E+1)	-	8E-11	-	-
72	Hafnium-173	D, see ^{170}Hf	5E+3	1E+4	5E-6	2E-8	7E-5	7E-4
		W, see ^{170}Hf	-	1E+4	5E-6	2E-8	-	-
72	Hafnium-175	D, see ^{170}Hf	3E+3	9E+2	4E-7	-	4E-5	4E-4
			-	Bone surf (1E+3)	-	1E-9	-	-
		W, see ^{170}Hf	-	1E+3	5E-7	2E-9	-	-
72	Hafnium-177m[2]	D, see ^{170}Hf	2E+4	6E+4	2E-5	8E-8	3E-4	3E-3
		W, see ^{170}Hf	-	9E+4	4E-5	1E-7	-	-
72	Hafnium-178m	D, see ^{170}Hf	3E+2	1E+0	5E-10	-	3E-6	3E-5
			-	Bone surf (2E+0)	-	3E-12	-	-
		W, see ^{170}Hf	-	5E+0	2E-9	-	-	-
			-	Bone surf (9E+0)	-	1E-11	-	-
72	Hafnium-179m	D, see ^{170}Hf	1E+3	3E+2	1E-7	-	1E-5	1E-4
			-	Bone surf (6E+2)	-	8E-10	-	-
		W, see ^{170}Hf	-	6E+2	3E-7	8E-10	-	-
72	Hafnium-180m	D, see ^{170}Hf	7E+3	2E+4	9E-6	3E-8	1E-4	1E-3
		W, see ^{170}Hf	-	3E+4	1E-5	4E-8	-	-
72	Hafnium-181	D, see ^{170}Hf	1E+3	2E+2	7E-8	-	2E-5	2E-4
			-	Bone surf (4E+2)	-	6E-10	-	-
		W, see ^{170}Hf	-	4E+2	2E-7	6E-10	-	-
72	Hafnium-182m[2]	D, see ^{170}Hf	4E+4	9E+4	4E-5	1E-7	5E-4	5E-3
		W, see ^{170}Hf	-	1E+5	6E-5	2E-7	-	-
72	Hafnium-182	D, see ^{170}Hf	2E+2	8E-1	3E-10	-	-	-
			Bone surf (4E+2)	Bone surf (2E+0)	-	2E-12	5E-6	5E-5
		W, see ^{170}Hf	-	3E+0	1E-9	-	-	-
			-	Bone surf (7E+0)	-	1E-11	-	-
72	Hafnium-183[2]	D, see ^{170}Hf	2E+4	5E+4	2E-5	6E-8	3E-4	3E-3
		W, see ^{170}Hf	-	6E+4	2E-5	8E-8	-	-
72	Hafnium-184	D, see ^{170}Hf	2E+3	8E+3	3E-6	1E-8	3E-5	3E-4
		W, see ^{170}Hf	-	6E+3	3E-6	9E-9	-	-

			Table 1 Occupational Values			Table II Effluent Concentration		Table III Releases to Sewers
			Col. 1 Oral Ingestion	Col. 2 Inhalation	Col. 3 Inhalation	Col. 1	Col. 2	Monthly Average Concen-tration
Atomic No.	Radionuclide	Class	ALI µCi	ALI µCi	DAC µCi/ml	Air µCi/ml	Water µCi/ml	µCi/ml
73	Tantalum-172[2]	W, all compounds except those given for Y	4E+4	1E+5	5E-5	2E-7	5E-4	5E-3
		Y, elemental Ta, oxides, hydroxides, halides, carbides, nitrates, and nitrides	-	1E+5	4E-5	1E-7	-	-
73	Tantalum-173	W, see ^{172}Ta	7E+3	2E+4	8E-6	3E-8	9E-5	9E-4
		Y, see ^{172}Ta	-	2E+4	7E-6	2E-8	-	-
73	Tantalum-174[2]	W, see ^{172}Ta	3E+4	1E+5	4E-5	1E-7	4E-4	4E-3
		Y, see ^{172}Ta	-	9E+4	4E-5	1E-7	-	-
73	Tantalum-175	W, see ^{172}Ta	6E+3	2E+4	7E-6	2E-8	8E-5	8E-4
		Y, see ^{172}Ta	-	1E+4	6E-6	2E-8	-	-
73	Tantalum-176	W, see ^{172}Ta	4E+3	1E+4	5E-6	2E-8	5E-5	5E-4
		Y, see ^{172}Ta	-	1E+4	5E-6	2E-8	-	-
73	Tantalum-177	W, see ^{172}Ta	1E+4	2E+4	8E-6	3E-8	2E-4	2E-3
		Y, see ^{172}Ta	-	2E+4	7E-6	2E-8	-	-
73	Tantalum-178	W, see ^{172}Ta	2E+4	9E+4	4E-5	1E-7	2E-4	2E-3
		Y, see ^{172}Ta	-	7E+4	3E-5	1E-7	-	-
73	Tantalum-179	W, see ^{172}Ta	2E+4	5E+3	2E-6	8E-9	3E-4	3E-3
		Y, see ^{172}Ta	-	9E+2	4E-7	1E-9	-	-
73	Tantalum-180m	W, see ^{172}Ta	2E+4	7E+4	3E-5	9E-8	3E-4	3E-3
		Y, see ^{172}Ta	-	6E+4	2E-5	8E-8	-	-
73	Tantalum-180	W, see ^{172}Ta	1E+3	4E+2	2E-7	6E-10	2E-5	2E-4
		Y, see ^{172}Ta	-	2E+1	1E-8	3E-11	-	-
73	Tantalum-182m[2]	W, see ^{172}Ta	2E+5	5E+5	2E-4	8E-7	-	-
			St wall (2E+5)	-	-	-	3E-3	3E-2
		Y, see ^{172}Ta	-	4E+5	2E-4	6E-7	-	-
73	Tantalum-182	W, see ^{172}Ta	8E+2	3E+2	1E-7	5E-10	1E-5	1E-4
		Y, see ^{172}Ta	-	1E+2	6E-8	2E-10	-	-
73	Tantalum-183	W, see ^{172}Ta	9E+2	1E+3	5E-7	2E-9	-	-
			LLI wall (1E+3)	-	-	-	2E-5	2E-4
		Y, see ^{172}Ta	-	1E+3	4E-7	1E-9	-	-
73	Tantalum-184	W, see ^{172}Ta	2E+3	5E+3	2E-6	8E-9	3E-5	3E-4
		Y, see ^{172}Ta	-	5E+3	2E-6	7E-9	-	-
73	Tantalum-185[2]	W, see ^{172}Ta	3E+4	7E+4	3E-5	1E-7	4E-4	4E-3
		Y, see ^{172}Ta	-	6E+4	3E-5	9E-8	-	-
73	Tantalum-186[2]	W, see ^{172}Ta	5E+4	2E+5	1E-4	3E-7	-	-
			St wall (7E+4)	-	-	-	1E-3	1E-2
		Y, see ^{172}Ta	-	2E+5	9E-5	3E-7	-	-
74	Tungsten-176	D, all compounds	1E+4	5E+4	2E-5	7E-8	1E-4	1E-3
74	Tungsten-177	D, all compounds	2E+4	9E+4	4E-5	1E-7	3E-4	3E-3
74	Tungsten-178	D, all compounds	5E+3	2E+4	8E-6	3E-8	7E-5	7E-4
74	Tungsten-179[2]	D, all compounds	5E+5	2E+6	7E-4	2E-6	7E-3	7E-2

			Table 1 Occupational Values			Table II Effluent Concentration		Table III Releases to Sewers
			Col. 1 Oral Ingestion	Col. 2 Inhalation	Col. 3 Inhalation	Col. 1	Col. 2	Monthly Average Concen-tration
Atomic No.	Radionuclide	Class	ALI µCi	ALI µCi	DAC µCi/ml	Air µCi/ml	Water µCi/ml	µCi/ml
74	Tungsten-181	D, all compounds	2E+4	3E+4	1E-5	5E-8	2E-4	2E-3
74	Tungsten-185	D, all compounds	2E+3	7E+3	3E-6	9E-9	-	-
			LLI wall (3E+3)	-	-	-	4E-5	4E-4
74	Tungsten-187	D, all compounds	2E+3	9E+3	4E-6	1E-8	3E-5	3E-4
74	Tungsten-188	D, all compounds	4E+2	1E+3	5E-7	2E-9	-	-
			LLI wall (5E+2)	-	-	-	7E-6	7E-5
75	Rhenium-177[2]	D, all compounds except those given for W	9E+4	3E+5	1E-4	4E-7	-	-
			St wall (1E+5)	-	-	-	2E-3	2E-2
		W, oxides, hydroxides, and nitrates	-	4E+5	1E-4	5E-7	-	-
75	Rhenium-178[2]	D, see ^{177}Re	7E+4	3E+5	1E-4	4E-7	-	-
			St wall (1E+5)	-	-	-	1E-3	1E-2
		W, see ^{177}Re	-	3E+5	1E-4	4E-7	-	-
75	Rhenium-181	D, see ^{177}Re	5E+3	9E+3	4E-6	1E-8	7E-5	7E-4
		W, see ^{177}Re	-	9E+3	4E-6	1E-8	-	-
75	Rhenium-182 (12.7 h)	D, see ^{177}Re	7E+3	1E+4	5E-6	2E-8	9E-5	9E-4
		W, see ^{177}Re	-	2E+4	6E-6	2E-8	-	-
75	Rhenium-182 (64.0 h)	D, see ^{177}Re	1E+3	2E+3	1E-6	3E-9	2E-5	2E-4
		W, see ^{177}Re	-	2E+3	9E-7	3E-9	-	-
75	Rhenium-184m	D, see ^{177}Re	2E+3	3E+3	1E-6	4E-9	3E-5	3E-4
		W, see ^{177}Re	-	4E+2	2E-7	6E-10	-	-
75	Rhenium-184	D, see ^{177}Re	2E+3	4E+3	1E-6	5E-9	3E-5	3E-4
		W, see ^{177}Re	-	1E+3	6E-7	2E-9	-	-
75	Rhenium-186m	D, see ^{177}Re	1E+3	2E+3	7E-7	-	-	-
			St wall (2E+3)	St wall (2E+3)	-	3E-9	2E-5	2E-4
		W, see ^{177}Re	-	2E+2	6E-8	2E-10	-	-
75	Rhenium-186	D, see ^{177}Re	2E+3	3E+3	1E-6	4E-9	3E-5	3E-4
		W, see ^{177}Re	-	2E+3	7E-7	2E-9	-	-
75	Rhenium-187	D, see ^{177}Re	6E+5	8E+5	4E-4	-	8E-3	8E-2
			-	St wall (9E+5)	-	1E-6	-	-
		W, see ^{177}Re	-	1E+5	4E-5	1E-7	-	-
75	Rhenium-188m[2]	D, see ^{177}Re	8E+4	1E+5	6E-5	2E-7	1E-3	1E-2
		W, see ^{177}Re	-	1E+5	6E-5	2E-7	-	-
75	Rhenium-188	D, see ^{177}Re	2E+3	3E+3	1E-6	4E-9	2E-5	2E-4
		W, see ^{177}Re	-	3E+3	1E-6	4E-9	-	-
75	Rhenium-189	D, see ^{177}Re	3E+3	5E+3	2E-6	7E-9	4E-5	4E-4
		W, see ^{177}Re	-	4E+3	2E-6	6E-9	-	-
76	Osmium-180[2]	D, all compounds except those given for W and Y	1E+5	4E+5	2E-4	5E-7	1E-3	1E-2
		W, halides and nitrates	-	5E+5	2E-4	7E-7	-	-
		Y, oxides and hydroxides	-	5E+5	2E-4	6E-7	-	-

			Table 1 Occupational Values			Table II Effluent Concentration		Table III Releases to Sewers
			Col. 1 Oral Ingestion	Col. 2 Inhalation	Col. 3 Inhalation	Col. 1	Col. 2	Monthly Average Concen-tration
Atomic No.	Radionuclide	Class	ALI µCi	ALI µCi	DAC µCi/ml	Air µCi/ml	Water µCi/ml	µCi/ml
76	Osmium-181[2]	D, see ^{180}Os	1E+4	4E+4	2E-5	6E-8	2E-4	2E-3
		W, see ^{180}Os	-	5E+4	2E-5	6E-8	-	-
		Y, see ^{180}Os	-	4E+4	2E-5	6E-8	-	-
76	Osmium-182	D, see ^{180}Os	2E+3	6E+3	2E-6	8E-9	3E-5	3E-4
		W, see ^{180}Os	-	4E+3	2E-6	6E-9	-	-
		Y, see ^{180}Os	-	4E+3	2E-6	6E-9	-	-
76	Osmium-185	D, see ^{180}Os	2E+3	5E+2	2E-7	7E-10	3E-5	3E-4
		W, see ^{180}Os	-	8E+2	3E-7	1E-9	-	-
		Y, see ^{180}Os	-	8E+2	3E-7	1E-9	-	-
76	Osmium-189m	D, see ^{180}Os	8E+4	2E+5	1E-4	3E-7	1E-3	1E-2
		W, see ^{180}Os	-	2E+5	9E-5	3E-7	-	-
		Y, see ^{180}Os	-	2E+5	7E-5	2E-7	-	-
76	Osmium-191m	D, see ^{180}Os	1E+4	3E+4	1E-5	4E-8	2E-4	2E-3
		W, see ^{180}Os	-	2E+4	8E-6	3E-8	-	-
		Y, see ^{180}Os	-	2E+4	7E-6	2E-8	-	-
76	Osmium-191	D, see ^{180}Os	2E+3	2E+3	9E-7	3E-9	-	-
			LLI wall (3E+3)	-	-	-	3E-5	3E-4
		W, see ^{180}Os	-	2E+3	7E-7	2E-9	-	-
		Y, see ^{180}Os	-	1E+3	6E-7	2E-9	-	-
76	Osmium-193	D, see ^{180}Os	2E+3	5E+3	2E-6	6E-9	-	-
			LLI wall (2E+3)	-	-	-	2E-5	2E-4
		W, see ^{180}Os	-	3E+3	1E-6	4E-9	-	-
		Y, see ^{180}Os	-	3E+3	1E-6	4E-9	-	-
76	Osmium-194	D, see ^{180}Os	4E+2	4E+1	2E-8	6E-11	-	-
			LLI wall (6E+2)	-	-	-	8E-6	8E-5
		W, see ^{180}Os	-	6E+1	2E-8	8E-11	-	-
		Y, see ^{180}Os	-	8E+0	3E-9	1E-11	-	-
77	Iridium-182[2]	D, all compounds except those given for W and Y	4E+4	1E+5	6E-5	2E-7	-	-
			St wall (4E+4)	-	-	-	6E-4	6E-3
		W, halides, nitrates, and metallic iridium	-	2E+5	6E-5	2E-7	-	-
		Y, oxides and hydroxides	-	1E+5	5E-5	2E-7	-	-
77	Iridium-184	D, see ^{182}Ir	8E+3	2E+4	1E-5	3E-8	1E-4	1E-3
		W, see ^{182}Ir	-	3E+4	1E-5	5E-8	-	-
		Y, see ^{182}Ir	-	3E+4	1E-5	4E-8	-	-
77	Iridium-185	D, see ^{182}Ir	5E+3	1E+4	5E-6	2E-8	7E-5	7E-4
		W, see ^{182}Ir	-	1E+4	5E-6	2E-8	-	-
		Y, see ^{182}Ir	-	1E+4	4E-6	1E-8	-	-
77	Iridium-186	D, see ^{182}Ir	2E+3	8E+3	3E-6	1E-8	3E-5	3E-4
		W, see ^{182}Ir	-	6E+3	3E-6	9E-9	-	-
		Y, see ^{182}Ir	-	6E+3	2E-6	8E-9	-	-
77	Iridium-187	D, see ^{182}Ir	1E+4	3E+4	1E-5	5E-8	1E-4	1E-3
		W, see ^{182}Ir	-	3E+4	1E-5	4E-8	-	-
		Y, see ^{182}Ir	-	3E+4	1E-5	4E-8	-	-
77	Iridium-188	D, see ^{182}Ir	2E+3	5E+3	2E-6	6E-9	3E-5	3E-4
		W, see ^{182}Ir	-	4E+3	1E-6	5E-9	-	-

			Table 1 Occupational Values			Table II Effluent Concentration		Table III Releases to Sewers
			Col. 1 Oral Ingestion	Col. 2 Inhalation	Col. 3 Inhalation	Col. 1	Col. 2	Monthly Average Concen-tration
Atomic No.	Radionuclide	Class	ALI µCi	ALI µCi	DAC µCi/ml	Air µCi/ml	Water µCi/ml	µCi/ml
		Y, see ^{182}Ir	-	3E+3	1E-6	5E-9	-	-
77	Iridium-189	D, see ^{182}Ir	5E+3	5E+3	2E-6	7E-9	-	-
			LLI wall (5E+3)	-	-	-	7E-5	7E-4
		W, see ^{182}Ir	-	4E+3	2E-6	5E-9	-	-
		Y, see ^{182}Ir	-	4E+3	1E-6	5E-9	-	-
77	Iridium-190m[2]	D, see ^{182}Ir	2E+5	2E+5	8E-5	3E-7	2E-3	2E-2
		W, see ^{182}Ir	-	2E+5	9E-5	3E-7	-	-
		Y, see ^{182}Ir	-	2E+5	8E-5	3E-7	-	-
77	Iridium-190	D, see ^{182}Ir	1E+3	9E+2	4E-7	1E-9	1E-5	1E-4
		W, see ^{182}Ir	-	1E+3	4E-7	1E-9	-	-
		Y, see ^{182}Ir	-	9E+2	4E-7	1E-9	-	-
77	Iridium-192m	D, see ^{182}Ir	3E+3	9E+1	4E-8	1E-10	4E-5	4E-4
		W, see ^{182}Ir	-	2E+2	9E-8	3E-10	-	-
		Y, see ^{182}Ir	-	2E+1	6E-9	2E-11	-	-
77	Iridium-192	D, see ^{182}Ir	9E+2	3E+2	1E-7	4E-10	1E-5	1E-4
		W, see ^{182}Ir	-	4E+2	2E-7	6E-10	-	-
		Y, see ^{182}Ir	-	2E+2	9E-8	3E-10	-	-
77	Iridium-194m	D, see ^{182}Ir	6E+2	9E+1	4E-8	1E-10	9E-6	9E-5
		W, see ^{182}Ir	-	2E+2	7E-8	2E-10	-	-
		Y, see ^{182}Ir	-	1E+2	4E-8	1E-10	-	-
77	Iridium-194	D, see ^{182}Ir	1E+3	3E+3	1E-6	4E-9	1E-5	1E-4
		W, see ^{182}Ir	-	2E+3	9E-7	3E-9	-	-
		Y, see ^{182}Ir	-	2E+3	8E-7	3E-9	-	-
77	Iridium-195m	D, see ^{182}Ir	8E+3	2E+4	1E-5	3E-8	1E-4	1E-3
		W, see ^{182}Ir	-	3E+4	1E-5	4E-8	-	-
		Y, see ^{182}Ir	-	2E+4	9E-6	3E-8	-	-
77	Iridium-195	D, see ^{182}Ir	1E+4	4E+4	2E-5	6E-8	2E-4	2E-3
		W, see ^{182}Ir	-	5E+4	2E-5	7E-8	-	-
		Y, see ^{182}Ir	-	4E+4	2E-5	6E-8	-	-
78	Platinum-186	D, all compounds	1E+4	4E+4	2E-5	5E-8	2E-4	2E-3
78	Platinum-188	D, all compounds	2E+3	2E+3	7E-7	2E-9	2E-5	2E-4
78	Platinum-189	D, all compounds	1E+4	3E+4	1E-5	4E-8	1E-4	1E-3
78	Platinum-191	D, all compounds	4E+3	8E+3	4E-6	1E-8	5E-5	5E-4
78	Platinum-193m	D, all compounds	3E+3	6E+3	3E-6	8E-9	-	-
			LLI wall (3E+4)	-	-	-	4E-5	4E-4
78	Platinum-193	D, all compounds	4E+4	2E+4	1E-5	3E-8	-	-
			LLI wall (5E+4)	-	-	-	6E-4	6E-3
78	Platinum-195m	D, all compounds	2E+3	4E+3	2E-6	6E-9	-	-
			LLI wall (2E+3)	-	-	-	3E-5	3E-4
78	Platinum-197m[2]	D, all compounds	2E+4	4E+4	2E-5	6E-8	2E-4	2E-3
78	Platinum-197	D, all compounds	3E+3	1E+4	4E-6	1E-8	4E-5	4E-4
78	Platinum-199[2]	D, all compounds	5E+4	1E+5	6E-5	2E-7	7E-4	7E-3

			Table 1 Occupational Values			Table II Effluent Concentration		Table III Releases to Sewers
			Col. 1 Oral Ingestion	Col. 2 Inhalation	Col. 3 Inhalation	Col. 1	Col. 2	Monthly Average Concen-tration
Atomic No.	Radionuclide	Class	ALI µCi	ALI µCi	DAC µCi/ml	Air µCi/ml	Water µCi/ml	µCi/ml
78	Platinum-200	D, all compounds	1E+3	3E+3	1E-6	5E-9	2E-5	2E-4
79	Gold-193	D, all compounds except those given for W and Y	9E+3	3E+4	1E-5	4E-8	1E-4	1E-3
		W, halides and nitrates	-	2E+4	9E-6	3E-8	-	-
		Y, oxides and hydroxides	-	2E+4	8E-6	3E-8	-	-
79	Gold-194	D, see ^{193}Au	3E+3	8E+3	3E-6	1E-8	4E-5	4E-4
		W, see ^{193}Au	-	5E+3	2E-6	8E-9	-	-
		Y, see ^{193}Au	-	5E+3	2E-6	7E-9	-	-
79	Gold-195	D, see ^{193}Au	5E+3	1E+4	5E-6	2E-8	7E-5	7E-4
		W, see ^{193}Au	-	1E+3	6E-7	2E-9	-	-
		Y, see ^{193}Au	-	4E+2	2E-7	6E-10	-	-
79	Gold-198m	D, see ^{193}Au	1E+3	3E+3	1E-6	4E-9	1E-5	1E-4
		W, see ^{193}Au	-	1E+3	5E-7	2E-9	-	-
		Y, see ^{193}Au	-	1E+3	5E-7	2E-9	-	-
79	Gold-198	D, see ^{193}Au	1E+3	4E+3	2E-6	5E-9	2E-5	2E-4
		W, see ^{193}Au	-	2E+3	8E-7	3E-9	-	-
		Y, see ^{193}Au	-	2E+3	7E-7	2E-9	-	-
79	Gold-199	D, see ^{193}Au	3E+3	9E+3	4E-6	1E-8	-	-
			LLI wall (3E+3)	-	-	-	4E-5	4E-4
		W, see ^{193}Au	-	4E+3	2E-6	6E-9	-	-
		Y, see ^{193}Au	-	4E+3	2E-6	5E-9	-	-
79	Gold-200m	D, see ^{193}Au	1E+3	4E+3	1E-6	5E-9	2E-5	2E-4
		W, see ^{193}Au	-	3E+3	1E-6	4E-9	-	-
		Y, see ^{193}Au	-	2E+4	1E-6	3E-9	-	-
79	Gold-200[2]	D, see ^{193}Au	3E+4	6E+4	3E-5	9E-8	4E-4	4E-3
		W, see ^{193}Au	-	8E+4	3E-5	1E-7	-	-
		Y, see ^{193}Au	-	7E+4	3E-5	1E-7	-	-
79	Gold-201[2]	D, see ^{193}Au	7E+4	2E+5	9E-5	3E-7	-	-
			St wall (9E+4)	-	-	-	1E-3	1E-2
		W, see ^{193}Au	-	2E+5	1E-4	3E-7	-	-
		Y, see ^{193}Au	-	2E+5	9E-5	3E-7	-	-
80	Mercury-193m	Vapor	-	8E+3	4E-6	1E-8	-	-
		Organic D	4E+3	1E+4	5E-6	2E-8	6E-5	6E-4
		D, sulfates	3E+3	9E+3	4E-6	1E-8	4E-5	4E-4
		W, oxides, hydroxides, halides, nitrates, and sulfides	-	8E+3	3E-6	1E-8	-	-
80	Mercury-193	Vapor	-	3E+4	1E-5	4E-8	-	-
		Organic D	2E+4	6E+4	3E-5	9E-8	3E-4	3E-3
		D, see ^{193m}Hg	2E+4	4E+4	2E-5	6E-8	2E-4	2E-3
		W, see ^{193m}Hg	-	4E+4	2E-5	6E-8	-	-
80	Mercury-194	Vapor	-	3E+1	1E-8	4E-11	-	-
		Organic D	2E+1	3E+1	1E-8	4E-11	2E-7	2E-6
		D, see ^{193m}Hg	8E+2	4E+1	2E-8	6E-11	1E-5	1E-4
		W, see ^{193m}Hg	-	1E+2	5E-8	2E-10	-	-
80	Mercury-195m	Vapor	-	4E+3	2E-6	6E-9	-	-
		Organic D	3E+3	6E+3	3E-6	8E-9	4E-5	4E-4
		D, see ^{193m}Hg	2E+3	5E+3	2E-6	7E-9	3E-5	3E-4
		W, see ^{193m}Hg	-	4E+3	2E-6	5E-9	-	-

			Table 1 Occupational Values			Table II Effluent Concentration		Table III Releases to Sewers
			Col. 1 Oral Ingestion	Col. 2 Inhalation	Col. 3 Inhalation	Col. 1	Col. 2	Monthly Average Concen-tration
Atomic No.	Radionuclide	Class	ALI µCi	ALI µCi	DAC µCi/ml	Air µCi/ml	Water µCi/ml	µCi/ml
80	Mercury-195	Vapor	-	3E+4	1E-5	4E-8	-	-
		Organic D	2E+4	5E+4	2E-5	6E-8	2E-4	2E-3
		D, see ^{193m}Hg	1E+4	4E+4	1E-5	5E-8	2E-4	2E-3
		W, see ^{193m}Hg	-	3E+4	1E-5	5E-8	-	-
80	Mercury-197m	Vapor	-	5E+3	2E-6	7E-9	-	-
		Organic D	4E+3	9E+3	4E-6	1E-8	5E-5	5E-4
		D, see ^{193m}Hg	3E+3	7E+3	3E-6	1E-8	4E-5	4E-4
		W, see ^{193m}Hg	-	5E+3	2E-6	7E-9	-	-
80	Mercury-197	Vapor	-	8E+3	4E-6	1E-8	-	-
		Organic D	7E+3	1E+4	6E-6	2E-8	9E-5	9E-4
		D, see ^{193m}Hg	6E+3	1E+4	5E-6	2E-8	8E-5	8E-4
		W, see ^{193m}Hg	-	9E+3	4E-6	1E-8	-	-
80	Mercury-199m[2]	Vapor	-	8E+4	3E-5	1E-7	-	-
		Organic D	6E+4	2E+5	7E-5	2E-7	-	-
			St wall (1E+5)	-	-	-	1E-3	1E-2
		D, see ^{193m}Hg	6E+4	1E+5	6E-5	2E-7	8E-4	8E-3
		W, see ^{193m}Hg	-	2E+5	7E-5	2E-7	-	-
80	Mercury-203	Vapor	-	8E+2	4E-7	1E-9	-	-
		Organic D	5E+2	8E+2	3E-7	1E-9	7E-6	7E-5
		D, see ^{193m}Hg	2E+3	1E+3	5E-7	2E-9	3E-5	3E-4
		W, see ^{193m}Hg	-	1E+3	5E-7	2E-9	-	-
81	Thallium-194m[2]	D, all compounds	5E+4	2E+5	6E-5	2E-7	-	-
			St wall (7E+4)	-	-	-	1E-3	1E-2
81	Thallium-194[2]	D, all compounds	3E+5	6E+5	2E-4	8E-7	-	-
			St wall (3E+5)	-	-	-	4E-3	4E-2
81	Thallium-195[2]	D, all compounds	6E+4	1E+5	5E-5	2E-7	9E-4	9E-3
81	Thallium-197	D, all compounds	7E+4	1E+5	5E-5	2E-7	1E-3	1E-2
81	Thallium-198m[2]	D, all compounds	3E+4	5E+4	2E-5	8E-8	4E-4	4E-3
81	Thallium-198	D, all compounds	2E+4	3E+4	1E-5	5E-8	3E-4	3E-3
81	Thallium-199	D, all compounds	6E+4	8E+4	4E-5	1E-7	9E-4	9E-3
81	Thallium-200	D, all compounds	8E+3	1E+4	5E-6	2E-8	1E-4	1E-3
81	Thallium-201	D, all compounds	2E+4	2E+4	9E-6	3E-8	2E-4	2E-3
81	Thallium-202	D, all compounds	4E+3	5E+3	2E-6	7E-9	5E-5	5E-4
81	Thallium-204	D, all compounds	2E+3	2E+3	9E-7	3E-9	2E-5	2E-4
82	Lead-195m[2]	D, all compounds	6E+4	2E+5	8E-5	3E-7	8E-4	8E-3
82	Lead-198	D, all compounds	3E+4	6E+4	3E-5	9E-8	4E-4	4E-3
82	Lead-199[2]	D, all compounds	2E+4	7E+4	3E-5	1E-7	3E-4	3E-3
82	Lead-200	D, all compounds	3E+3	6E+3	3E-6	9E-9	4E-5	4E-4
82	Lead-201	D, all compounds	7E+3	2E+4	8E-6	3E-8	1E-4	1E-3
82	Lead-202m	D, all compounds	9E+3	3E+4	1E-5	4E-8	1E-4	1E-3
82	Lead-202	D, all compounds	1E+2	5E+1	2E-8	7E-11	2E-6	2E-5

			Table 1 Occupational Values			Table II Effluent Concentration		Table III Releases to Sewers
			Col. 1 Oral Ingestion	Col. 2 Inhalation	Col. 3 Inhalation	Col. 1	Col. 2	Monthly Average Concen-tration
Atomic No.	Radionuclide	Class	ALI µCi	ALI µCi	DAC µCi/ml	Air µCi/ml	Water µCi/ml	µCi/ml
82	Lead-203	D, all compounds	5E+3	9E+3	4E-6	1E-8	7E-5	7E-4
82	Lead-205	D, all compounds	4E+3	1E+3	6E-7	2E-9	5E-5	5E-4
82	Lead-209	D, all compounds	2E+4	6E+4	2E-5	8E-8	3E-4	3E-3
82	Lead-210	D, all compounds	6E-1	2E-1	1E-10	-	-	-
			Bone surf (1E+0)	Bone surf (4E-1)	-	6E-13	1E-8	1E-7
82	Lead-211[2]	D, all compounds	1E+4	6E+2	3E-7	9E-10	2E-4	2E-3
82	Lead-212	D, all compounds	8E+1	3E+1	1E-8	5E-11	-	-
			Bone surf (1E+2)	-	-	-	2E-6	2E-5
82	Lead-214[2]	D, all compounds	9E+3	8E+2	3E-7	1E-9	1E-4	1E-3
83	Bismuth-200[2]	D, nitrates	3E+4	8E+4	4E-5	1E-7	4E-4	4E-3
		W, all other compounds	-	1E+5	4E-5	1E-7	-	-
83	Bismuth-201[2]	D, see ^{200}Bi	1E+4	3E+4	1E-5	4E-8	2E-4	2E-3
		W, see ^{200}Bi	-	4E+4	2E-5	5E-8	-	-
83	Bismuth-202[2]	D, see ^{200}Bi	1E+4	4E+4	2E-5	6E-8	2E-4	2E-3
		W, see ^{200}Bi	-	8E+4	3E-5	1E-7	-	-
83	Bismuth-203	D, see ^{200}Bi	2E+3	7E+3	3E-6	9E-9	3E-5	3E-4
		W, see ^{200}Bi	-	6E+3	3E-6	9E-9	-	-
83	Bismuth-205	D, see ^{200}Bi	1E+3	3E+3	1E-6	3E-9	2E-5	2E-4
		W, see ^{200}Bi	-	1E+3	5E-7	2E-9	-	-
83	Bismuth-206	D, see ^{200}Bi	6E+2	1E+3	6E-7	2E-9	9E-6	9E-5
		W, see ^{200}Bi	-	9E+2	4E-7	1E-9	-	-
83	Bismuth-207	D, see ^{200}Bi	1E+3	2E+3	7E-7	2E-9	1E-5	1E-4
		W, see ^{200}Bi	-	4E+2	1E-7	5E-10	-	-
83	Bismuth-210m	D, see ^{200}Bi	4E+1	5E+0	2E-9	-	-	-
			Kidneys (6E+1)	Kidneys (6E+0)	-	9E-12	8E-7	8E-6
		W, see ^{200}Bi	-	7E-1	3E-10	9E-13	-	-
83	Bismuth-210	D, see ^{200}Bi	8E+2	2E+2	1E-7	-	1E-5	1E-4
			-	Kidneys				
			-	(4E+2)	-	5E-10	-	-
		W, see ^{200}Bi	-	3E+1	1E-8	4E-11	-	-
83	Bismuth-212[2]	D, see ^{200}Bi	5E+3	2E+2	1E-7	3E-10	7E-5	7E-4
		W, see ^{200}Bi	-	3E+2	1E-7	4E-10	-	-
83	Bismuth-213[2]	D, see ^{200}Bi	7E+3	3E+2	1E-7	4E-10	1E-4	1E-3
		W, see ^{200}Bi	-	4E+2	1E-7	5E-10	-	-
83	Bismuth-214[2]	D, see ^{200}Bi	2E+4	8E+2	3E-7	1E-9	-	-
			St wall (2E+4)	-	-	-	3E-4	3E-3
		W, see ^{200}Bi	-	9E-2	4E-7	1E-9	-	-
84	Polonium-203[2]	D, all compounds except those given for W	3E+4	6E+4	3E-5	9E-8	3E-4	3E-3
		W, oxides, hydroxides, and nitrates	-	9E+4	4E-5	1E-7	-	-

			Table 1 Occupational Values			Table II Effluent Concentration		Table III Releases to Sewers
			Col. 1 Oral Ingestion	Col. 2 Inhalation	Col. 3 Inhalation	Col. 1	Col. 2	Monthly Average Concentration
Atomic No.	Radionuclide	Class	ALI µCi	ALI µCi	DAC µCi/ml	Air µCi/ml	Water µCi/ml	µCi/ml
84	Polonium-205[2]	D, see ^{203}Po	2E+4	4E+4	2E-5	5E-8	3E-4	3E-3
		W, see ^{203}Po	-	7E+4	3E-5	1E-7	-	-
84	Polonium-207	D, see ^{203}Po	8E+3	3E+4	1E-5	3E-8	1E-4	1E-3
		W, see ^{203}Po	-	3E+4	1E-5	4E-8	-	-
84	Polonium-210	D, see ^{203}Po	3E+0	6E-1	3E-10	9E-13	4E-8	4E-7
		W, see ^{203}Po	-	6E-1	3E-10	9E-13	-	-
85	Astatine-207[2]	D, halides	6E+3	3E+3	1E-6	4E-9	8E-5	8E-4
		W	-	2E+3	9E-7	3E-9	-	-
85	Astatine-211	D, halides	1E+2	8E+1	3E-8	1E-10	2E-6	2E-5
		W	-	5E+1	2E-8	8E-11	-	-
86	Radon-220	With daughters removed	-	2E+4	7E-6	2E-8	-	-
		With daughters present	-	2E+1 (or 12 working level months)	9E-9	3E-11 (or 1.0 working level)	-	-
86	Radon-222	With daughters removed	-	1E+4	4E-6	1E-8	-	-
		With daughters present	-	1E+2 (or 4 working level months)	3E-8	1E-10 (or 0.33 working level)	-	-
87	Francium-222[2]	D, all compounds	2E+3	5E+2	2E-7	6E-10	3E-5	3E-4
87	Francium-223[2]	D, all compounds	6E+2	8E+2	3E-7	1E-9	8E-6	8E-5
88	Radium-223	W, all compounds	5E+0	7E-1	3E-10	9E-13	-	-
			Bone surf (9E+0)	-	-	-	1E-7	1E-6
88	Radium-224	W, all compounds	8E+0	2E+0	7E-10	2E-12	-	-
			Bone surf (2E+1)	-	-	-	2E-7	2E-6
88	Radium-225	W, all compounds	8E+0	7E-1	3E-10	9E-13	-	-
			Bone surf (2E+1)	-	-	-	2E-7	2E-6
88	Radium-226	W, all compounds	2E+0	6E-1	3E-10	9E-13	-	-
			Bone surf (5E+0)	-	-	-	6E-8	6E-7
88	Radium-227[2]	W, all compounds	2E+4	1E+4	6E-6	-	-	-
			Bone surf (2E+4)	Bone surf (2E+4)	-	3E-8	3E-4	3E-3
88	Radium-228	W, all compounds	2E+0	1E+0	5E-10	2E-12	-	-
			Bone surf (4E+0)	-	-	-	6E-8	6E-7
89	Actinium-224	D, all compounds except those given for W and Y	2E+3	3E+1	1E-8	-	-	-
			LLI wall (2E+3)	Bone surf (4E+1)	-	5E-11	3E-5	3E-4
		W, halides and nitrates	-	5E+1	2E-8	7E-11	-	-
		Y, oxides and hydroxides	-	5E+1	2E-8	6E-11	-	-
89	Actinium-225	D, see ^{224}Ac	5E+1	3E-1	1E-10	-	-	-
			LLI wall (5E+1)	Bone surf (5E-1)	-	7E-13	7E-7	7E-6
		W, see ^{224}Ac	-	6E-1	3E-10	9E-13	-	-

			Table 1 Occupational Values			Table II Effluent Concentration		Table III Releases to Sewers
			Col. 1 Oral Ingestion	Col. 2 Inhalation	Col. 3 Inhalation	Col. 1	Col. 2	Monthly Average Concen-tration
Atomic No.	Radionuclide	Class	ALI µCi	ALI µCi	DAC µCi/ml	Air µCi/ml	Water µCi/ml	µCi/ml
		Y, see ^{224}Ac	-	6E-1	3E-10	9E-13	-	-
89	Actinium-226	D, see ^{224}Ac	1E+2	3E+0	1E-9	-	-	-
			LLI wall (1E+2)	Bone surf (4E+0)	-	5E-12	2E-6	2E-5
		W, see ^{224}Ac	-	5E+0	2E-9	7E-12	-	-
		Y, see ^{224}Ac	-	5E+0	2E-9	6E-12	-	-
89	Actinium-227	D, see ^{224}Ac	2E-1	4E-4	2E-13	-	-	-
			Bone surf (4E-1)	Bone surf (8E-4)	-	1E-15	5E-9	5E-8
		W, see ^{224}Ac	-	2E-3	7E-13	-	-	-
			-	Bone surf (3E-3)	-	4E-15	-	-
		Y, see ^{224}Ac	-	4E-3	2E-12	6E-15	-	-
89	Actinium-228	D, see ^{224}Ac	2E+3	9E+0	4E-9	-	3E-5	3E-4
			-	Bone surf (2E+1)	-	2E-11	-	-
		W, see ^{224}Ac	-	4E+1	2E-8	-	-	-
			-	Bone surf (6E+1)	-	8E-11	-	-
		Y, see ^{224}Ac	-	4E+1	2E-8	6E-11	-	-
90	Thorium-226[2]	W, all compounds except those given for Y	5E+3	2E+2	6E-8	2E-10	-	-
			St wall (5E+3)	-	-	-	7E-5	7E-4
		Y, oxides and hydroxides	-	1E+2	6E-8	2E-10	-	-
90	Thorium-227	W, see ^{226}Th	1E+2	3E-1	1E-10	5E-13	2E-6	2E-5
		Y, see ^{226}Th	-	3E-1	1E-10	5E-13	-	-
90	Thorium-228	W, see ^{226}Th	6E+0	1E-2	4E-12	-	-	-
			Bone surf (1E+1)	Bone surf (2E-2)	-	3E-14	2E-7	2E-6
		Y, see ^{226}Th	-	2E-2	7E-12	2E-14	-	-
90	Thorium-229	W, see ^{226}Th	6E-1	9E-4	4E-13	-	-	-
			Bone surf (1E+0)	Bone surf (2E-3)	-	3E-15	2E-8	2E-7
		Y, see ^{226}Th	-	2E-3	1E-12	-	-	-
			-	Bone surf (3E-3)	-	4E-15	-	-
90	Thorium-230	W, see ^{226}Th	4E+0	6E-3	3E-12	-	-	-
			Bone surf (9E+0)	Bone surf (2E-2)	-	2E-14	1E-7	1E-6
		Y, see ^{226}Th	-	2E-2	6E-12	-	-	-
			-	Bone surf (2E-2)	-	3E-14	-	-
90	Thorium-231	W, see ^{226}Th	4E+3	6E+3	3E-6	9E-9	5E-5	5E-4
		Y, see ^{226}Th	-	6E+3	3E-6	9E-9	-	-
90	Thorium-232	W, see ^{226}Th	7E-1	1E-3	5E-13	-	-	-
			Bone surf (2E+0)	Bone surf (3E-3)	-	4E-15	3E-8	3E-7
		Y, see ^{226}Th	-	3E-3	1E-12	-	-	-
			-	Bone surf (4E-3)	-	6E-15	-	-
90	Thorium-234	W, see ^{226}Th	3E+2	2E+2	8E-8	3E-10	-	-
			LLI wall (4E+2)	-	-	-	5E-6	5E-5

			Table 1 Occupational Values			Table II Effluent Concentration		Table III Releases to Sewers
			Col. 1 Oral Ingestion	Col. 2 Inhalation	Col. 3 Inhalation	Col. 1	Col. 2	Monthly Average Concen-tration
Atomic No.	Radionuclide	Class	ALI µCi	ALI µCi	DAC µCi/ml	Air µCi/ml	Water µCi/ml	µCi/ml
		Y, see ^{226}Th	-	2E+2	6E-8	2E-10	-	-
91	Protactinium-227[2]	W, all compounds except those given for Y	4E+3	1E+2	5E-8	2E-10	5E-5	5E-4
		Y, oxides and hydroxides	-	1E+2	4E-8	1E-10	-	-
91	Protactinium-228	W, see ^{227}Pa	1E+3	1E+1	5E-9	-	2E-5	2E-4
			-	Bone surf (2E+1)	-	3E-11	-	-
		Y, see ^{227}Pa	-	1E+1	5E-9	2E-11	-	-
91	Protactinium-230	W, see ^{227}Pa	6E+2	5E+0	2E-9	7E-12	-	-
			Bone surf (9E+2)	-	-	-	1E-5	1E-4
		Y, see ^{227}Pa	-	4E+0	1E-9	5E-12	-	-
91	Protactinium-231	W, see ^{227}Pa	2E-1	2E-3	6E-13	-	-	-
			Bone surf (5E-1)	Bone surf (4E-3)	-	6E-15	6E-9	6E-8
		Y, see ^{227}Pa	-	4E-3	2E-12	-	-	-
			-	Bone surf (6E-3)	-	8E-15	-	-
91	Protactinium-232	W, see ^{227}Pa	1E+3	2E+1	9E-9	-	2E-5	2E-4
			-	Bone surf (6E+1)	-	8E-11	-	-
		Y, see ^{227}Pa	-	6E+1	2E-8	-	-	-
			-	Bone surf (7E+1)	-	1E-10	-	-
91	Protactinium-233	W, see ^{227}Pa	1E+3	7E+2	3E-7	1E-9	-	-
			LLI wall (2E+3)	-	-	-	2E-5	2E-4
		Y, see ^{227}Pa	-	6E+2	2E-7	8E-10	-	-
91	Protactinium-234	W, see ^{227}Pa	2E+3	8E+3	3E-6	1E-8	3E-5	3E-4
		Y, see ^{227}Pa	-	7E+3	3E-6	9E-9	-	-
92	Uranium-230	D, UF_6, UO_2F_2, $UO_2(NO_3)_2$	4E+0	4E-1	2E-10	-	-	-
			Bone surf (6E+0)	Bone surf (6E-1)	-	8E-13	8E-8	8E-7
		W, UO_3, UF_4, UCl_4	-	4E-1	1E-10	5E-13	-	-
		Y, UO_2, U_3O_8	-	3E-1	1E-10	4E-13	-	-
92	Uranium-231	D, see ^{230}U	5E+3	8E+3	3E-6	1E-8	-	-
			LLI wall (4E+3)	-	-	-	6E-5	6E-4
		W, see ^{230}U	-	6E+3	2E-6	8E-9	-	-
		Y, see ^{230}U	-	5E+3	2E-6	6E-9	-	-
92	Uranium-232	D, see ^{230}U	2E+0	2E-1	9E-11	-	-	-
			Bone surf (4E+0)	Bone surf (4E-1)	-	6E-13	6E-8	6E-7
		W, see ^{230}U	-	4E-1	2E-10	5E-13	-	-
		Y, see ^{230}U	-	8E-3	3E-12	1E-14	-	-
92	Uranium-233	D, see ^{230}U	1E+1	1E+0	5E-10	-	-	-
			Bone surf (2E+1)	Bone surf (2E+0)	-	3E-12	3E-7	3E-6
		W, see ^{230}U	-	7E-1	3E-10	1E-12	-	-
		Y, see ^{230}U	-	4E-2	2E-11	5E-14	-	-
92	Uranium-234[3]	D, see ^{230}U	1E+1	1E+0	5E-10	-	-	-
			Bone surf (2E+1)	Bone surf (2E+0)	-	3E-12	3E-7	3E-6

			Table 1 Occupational Values			Table II Effluent Concentration		Table III Releases to Sewers
			Col. 1 Oral Ingestion	Col. 2 Inhalation	Col. 3 Inhalation	Col. 1	Col. 2	Monthly Average Concen-tration
Atomic No.	Radionuclide	Class	ALI µCi	ALI µCi	DAC µCi/ml	Air µCi/ml	Water µCi/ml	µCi/ml
		W, see ^{230}U	-	7E-1	3E-10	1E-12	-	-
		Y, see ^{230}U	-	4E-2	2E-11	5E-14	-	-
92	Uranium-235[3]	D, see ^{230}U	1E+1 Bone surf (2E+1)	1E+0 Bone surf (2E+0)	6E-10 -	- 3E-12	- 3E-7	- 3E-6
		W, see ^{230}U	-	8E-1	3E-10	1E-12	-	-
		Y, see ^{230}U	-	4E-2	2E-11	6E-14	-	-
92	Uranium-236	D, see ^{230}U	1E+1 Bone surf (2E+1)	1E+0 Bone surf (2E+0)	5E-10 -	- 3E-12	- 3E-7	- 3E-6
		W, see ^{230}U	-	8E-1	3E-10	1E-12	-	-
		Y, see ^{230}U	-	4E-2	2E-11	6E-14	-	-
92	Uranium-237	D, see ^{230}U	2E+3 LLI wall (2E+3)	3E+3 -	1E-6 -	4E-9 -	- 3E-5	- 3E-4
		W, see ^{230}U	-	2E+3	7E-7	2E-9	-	-
		Y, see ^{230}U	-	2E+3	6E-7	2E-9	-	-
92	Uranium-238[3]	D, see ^{230}U	1E+1 Bone surf (2E+1)	1E+0 Bone surf (2E+0)	6E-10 -	- 3E-12	- 3E-7	- 3E-6
		W, see ^{230}U	-	8E-1	3E-10	1E-12	-	-
		Y, see ^{230}U	-	4E-2	2E-11	6E-14	-	-
92	Uranium-239[2]	D, see ^{230}U	7E+4	2E+5	8E-5	3E-7	9E-4	9E-3
		W, see ^{230}U	-	2E+5	7E-5	2E-7	-	-
		Y, see ^{230}U	-	2E+5	6E-5	2E-7	-	-
92	Uranium-240	D, see ^{230}U	1E+3	4E+3	2E-6	5E-9	2E-5	2E-4
		W, see ^{230}U	-	3E+3	1E-6	4E-9	-	-
		Y, see ^{230}U	-	2E+3	1E-6	3E-9	-	-
92	Uranium-natural[3]	D, see ^{230}U	1E+1 Bone surf (2E+1)	1E+0 Bone surf (2E+0)	5E-10 -	- 3E-12	- 3E-7	- 3E-6
		W, see ^{230}U	-	8E-1	3E-10	9E-13	-	-
		Y, see ^{230}U	-	5E-2	2E-11	9E-14	-	-
93	Neptunium-232[2]	W, all compounds	1E+5 -	2E+3 Bone surf (5E+2)	7E-7 -	- 6E-9	2E-3 -	2E-2 -
93	Neptunium-233[2]	W, all compounds	8E+5	3E+6	1E-3	4E-6	1E-2	1E-1
93	Neptunium-234	W, all compounds	2E+3	3E+3	1E-6	4E-9	3E-5	3E-4
93	Neptunium-235	W, all compounds	2E+4 LLI wall (2E+4)	8E+2 Bone surf (1E+3)	3E-7 -	- 2E-9	- 3E-4	- 3E-3
93	Neptunium-236 (1.15E+5 y)	W, all compounds	3E+0 Bone surf (6E+0)	2E-2 Bone surf (5E-2)	9E-12 -	- 8E-14	- 9E-8	- 9E-7
93	Neptunium-236 (22.5 h)	W, all compounds	3E+3 Bone surf (4E+3)	3E+1 Bone surf (7E+1)	1E-8 -	- 1E-10	- 5E-5	- 5E-4
93	Neptunium-237	W, all compounds	5E-1 Bone surf (1E+0)	4E-3 Bone surf (1E-2)	2E-12 -	- 1E-14	- 2E-8	- 2E-7

			Table 1 Occupational Values			Table II Effluent Concentration		Table III Releases to Sewers
			Col. 1 Oral Ingestion	Col. 2 Inhalation	Col. 3 Inhalation	Col. 1	Col. 2	Monthly Average Concen-tration
Atomic No.	Radionuclide	Class	ALI µCi	ALI µCi	DAC µCi/ml	Air µCi/ml	Water µCi/ml	µCi/ml
93	Neptunium-238	W, all compounds	1E+3	6E+1	3E-8	-	2E-5	2E-4
			-	Bone surf (2E+2)	-	2E-10	-	-
93	Neptunium-239	W, all compounds	2E+3	2E+3	9E-7	3E-9	-	-
			LLI wall (2E+3)	-	-	-	2E-5	2E-4
93	Neptunium-240[2]	W, all compounds	2E+4	8E+4	3E-5	1E-7	3E-4	3E-3
94	Plutonium-234	W, all compounds except PuO_2	8E+3	2E+2	9E-8	3E-10	1E-4	1E-3
		Y, PuO_2	-	2E+2	8E-8	3E-10	-	-
94	Plutonium-235[2]	W, see ^{234}Pu	9E+5	3E+6	1E-3	4E-6	1E-2	1E-1
		Y, see ^{234}Pu	-	3E+6	1E-3	3E-6	-	-
94	Plutonium-236	W, see ^{234}Pu	2E+0	2E-2	8E-12	-	-	-
			Bone surf (4E+0)	Bone surf (4E-2)	-	5E-14	6E-8	6E-7
		Y, see ^{234}Pu	-	4E-2	2E-11	6E-14	-	-
94	Plutonium-237	W, see ^{234}Pu	1E+4	3E+3	1E-6	5E-9	2E-4	2E-3
		Y, see ^{234}Pu	-	3E+3	1E-6	4E-9	-	-
94	Plutonium-238	W, see ^{234}Pu	9E-1	7E-3	3E-12	-	-	-
			Bone surf (2E+0)	Bone surf (1E-2)	-	2E-14	2E-8	2E-7
		Y, see ^{234}Pu	-	2E-2	8E-12	2E-14	-	-
94	Plutonium-239	W, see ^{234}Pu	8E-1	6E-3	3E-12	-	-	-
			Bone surf (1E+0)	Bone surf (1E-2)	-	2E-14	2E-8	2E-7
		Y, see ^{234}Pu	-	2E-2	7E-12	-	-	-
			-	Bone surf (2E-2)	-	2E-14	-	-
94	Plutonium-240	W, see ^{234}Pu	8E-1	6E-3	3E-12	-	-	-
			Bone surf (1E+0)	Bone surf (1E-2)	-	2E-14	2E-8	2E-7
		Y, see ^{234}Pu	-	2E-2	7E-12	-	-	-
			-	Bone surf (2E-2)	-	2E-14	-	-
94	Plutonium-241	W, see ^{234}Pu	4E+1	3E-1	1E-10	-	-	-
			Bone surf (7E+1)	Bone surf (6E-1)	-	8E-13	1E-6	1E-5
		Y, see ^{234}Pu	-	8E-1	3E-10	-	-	-
			-	Bone surf (1E+0)	-	1E-12	-	-
94	Plutonium-242	W, see ^{234}Pu	8E-1	7E-3	3E-12	-	-	-
			Bone surf (1E+0)	Bone surf (1E-2)	-	2E-14	2E-8	2E-7
		Y, see ^{234}Pu	-	2E-2	7E-12	-	-	-
			-	Bone surf (2E-2)	-	2E-14	-	-
94	Plutonium-243	W, see ^{234}Pu	2E+4	4E+4	2E-5	5E-8	2E-4	2E-3
		Y, see ^{234}Pu	-	4E+4	2E-5	5E-8	-	-
94	Plutonium-244	W, see ^{234}Pu	8E-1	7E-3	3E-12	-	-	-
			Bone surf (2E+0)	Bone surf (1E-2)	-	2E-14	2E-8	2E-7
		Y, see ^{234}Pu	-	2E-2	7E-12	-	-	-

			Table 1 Occupational Values			Table II Effluent Concentration		Table III Releases to Sewers
			Col. 1 Oral Ingestion	Col. 2 Inhalation	Col. 3 Inhalation	Col. 1	Col. 2	Monthly Average Concen-tration
Atomic No.	Radionuclide	Class	ALI µCi	ALI µCi	DAC µCi/ml	Air µCi/ml	Water µCi/ml	µCi/ml
			-	Bone surf (2E-2)	-	2E-14	-	-
94	Plutonium-245	W, see ^{234}Pu	2E+3	5E+3	2E-6	6E-9	3E-5	3E-4
		Y, see ^{234}Pu	-	4E+3	2E-6	6E-9	-	-
94	Plutonium-246	W, see ^{234}Pu	4E+2	3E+2	1E-7	4E-10	-	-
			LLI wall (4E+2)	-	-	-	6E-6	6E-5
		Y, see ^{234}Pu	-	3E+2	1E-7	4E-10	-	-
95	Americium-237[2]	W, all compounds	8E+4	3E+5	1E-4	4E-7	1E-3	1E-2
95	Americium-238[2]	W, all compounds	4E+4	3E+3	1E-6	-	5E-4	5E-3
			-	Bone surf (6E+3)	-	9E-9	-	-
95	Americium-239	W, all compounds	5E+3	1E+4	5E-6	2E-8	7E-5	7E-4
95	Americium-240	W, all compounds	2E+3	3E+3	1E-6	4E-9	3E-5	3E-4
95	Americium-241	W, all compounds	8E-1	6E-3	3E-12	-	-	-
			Bone surf (1E+0)	Bone surf (1E-2)	-	2E-14	2E-8	2E-7
95	Americium-242m	W, all compounds	8E-1	6E-3	3E-12	-	-	-
			Bone surf (1E+0)	Bone surf (1E-2)	-	2E-14	2E-8	2E-7
95	Americium-242	W, all compounds	4E+3	8E+1	4E-8	-	5E-5	5E-4
			-	Bone surf (9E+1)	-	1E-10	-	-
95	Americium-243	W, all compounds	8E-1	6E-3	3E-12	-	-	-
			Bone surf (1E+0)	Bone surf (1E-2)	-	2E-14	2E-8	2E-7
95	Americium-244m[2]	W, all compounds	6E+4	4E+3	2E-6	-	-	-
			St wall (8E+4)	Bone surf (7E+3)	-	1E-8	1E-3	1E-2
95	Americium-244	W, all compounds	3E+3	2E+2	8E-8	-	4E-5	4E-4
			-	Bone surf (3E+2)	-	4E-10	-	-
95	Americium-245	W, all compounds	3E+4	8E+4	3E-5	1E-7	4E-4	4E-3
95	Americium-246m[2]	W, all compounds	5E+4	2E+5	8E-5	3E-7	-	-
			St wall (6E+4)	-	-	-	8E-4	8E-3
95	Americium-246[2]	W, all compounds	3E+4	1E+5	4E-5	1E-7	4E-4	4E-3
96	Curium-238	W, all compounds	2E+4	1E+3	5E-7	2E-9	2E-4	2E-3
96	Curium-240	W, all compounds	6E+1	6E-1	2E-10	-	-	-
			Bone surf (8E+1)	Bone surf (6E-1)	-	9E-13	1E-6	1E-5
96	Curium-241	W, all compounds	1E+3	3E+1	1E-8	-	2E-5	2E-4
			-	Bone surf (4E+1)	-	5E-11	-	-
96	Curium-242	W, all compounds	3E+1	3E-1	1E-10	-	-	-
			Bone surf (5E+1)	Bone surf (3E-1)	-	4E-13	7E-7	7E-6

			Table 1 Occupational Values			Table II Effluent Concentration		Table III Releases to Sewers
			Col. 1 Oral Ingestion	Col. 2 Inhalation	Col. 3 Inhalation	Col. 1	Col. 2	Monthly Average Concen-tration
Atomic No.	Radionuclide	Class	ALI µCi	ALI µCi	DAC µCi/ml	Air µCi/ml	Water µCi/ml	µCi/ml
96	Curium-243	W, all compounds	1E+0	9E-3	4E-12	-	-	-
			Bone surf (2E+0)	Bone surf (2E-2)	-	2E-14	3E-8	3E-7
96	Curium-244	W, all compounds	1E+0	1E-2	5E-12	-	-	-
			Bone surf (3E+0)	Bone surf (2E-2)	-	3E-14	3E-8	3E-7
96	Curium-245	W, all compounds	7E-1	6E-3	3E-12	-	-	-
			Bone surf (1E+0)	Bone surf (1E-2)	-	2E-14	2E-8	2E-7
96	Curium-246	W, all compounds	7E-1	6E-3	3E-12	-	-	-
			Bone surf (1E+0)	Bone surf (1E-2)	-	2E-14	2E-8	2E-7
96	Curium-247	W, all compounds	8E-1	6E-3	3E-12	-	-	-
			Bone surf (1E+0)	Bone surf (1E-2)	-	2E-14	2E-8	2E-7
96	Curium-248	W, all compounds	2E-1	2E-3	7E-13	-	-	-
			Bone surf (4E-1)	Bone surf (3E-3)	-	4E-15	5E-9	5E-8
96	Curium-249[2]	W, all compounds	5E+4	2E+4	7E-6	-	7E-4	7E-3
			-	Bone surf (3E+4)	-	4E-8	-	-
96	Curium-250	W, all compounds	4E-2	3E-4	1E-13	-	-	-
			Bone surf (6E-2)	Bone surf (5E-4)	-	8E-16	9E-10	9E-9
97	Berkelium-245	W, all compounds	2E+3	1E+3	5E-7	2E-9	3E-5	3E-4
97	Berkelium-246	W, all compounds	3E+3	3E+3	1E-6	4E-9	4E-5	4E-4
97	Berkelium-247	W, all compounds	5E-1	4E-3	2E-12	-	-	-
			Bone surf (1E+0)	Bone surf (9E-3)	-	1E-14	2E-8	2E-7
97	Berkelium-249	W, all compounds	2E+2	2E+0	7E-10	-	-	-
			Bone surf (5E+2)	Bone surf (4E+0)	-	5E-12	6E-6	6E-5
97	Berkelium-250	W, all compounds	9E+3	3E+2	1E-7	-	1E-4	1E-3
			-	Bone surf (7E+2)	-	1E-9	-	-
98	Californium-244[2]	W, all compounds except those given for Y	3E+4	6E+2	2E-7	8E-10	-	-
			St wall (3E+4)	-	-	-	4E-4	4E-3
		Y, oxides and hydroxides	-	6E+2	2E-7	8E-10	-	-
98	Californium-246	W, see ^{244}Cf	4E+2	9E+0	4E-9	1E-11	5E-6	5E-5
		Y, see ^{244}Cf	-	9E+0	4E-9	1E-11	-	-
98	Californium-248	W, see ^{244}Cf	8E+0	6E-2	3E-11	-	-	-
			Bone surf (2E+1)	Bone surf (1E-1)	-	2E-13	2E-7	2E-6
		Y, see ^{244}Cf	-	1E-1	4E-11	1E-13	-	-
98	Californium-249	W, see ^{244}Cf	5E-1	4E-3	2E-12	-	-	-
			Bone surf (1E+0)	Bone surf (9E-3)	-	1E-14	2E-8	2E-7
		Y, see ^{244}Cf	-	1E-2	4E-12	-	-	-

			Table 1 Occupational Values			Table II Effluent Concentration		Table III Releases to Sewers
			Col. 1 Oral Ingestion	Col. 2 Inhalation	Col. 3 Inhalation	Col. 1	Col. 2	Monthly Average Concen-tration
Atomic No.	Radionuclide	Class	ALI µCi	ALI µCi	DAC µCi/ml	Air µCi/ml	Water µCi/ml	µCi/ml
			-	Bone surf (1E-2)	-	2E-14	-	-
98	Californium-250	W, see ^{244}Cf	1E+0	9E-3	4E-12	-	-	-
			Bone surf (2E+0)	Bone surf (2E-2)	-	3E-14	3E-8	3E-7
		Y, see ^{244}Cf	-	3E-2	1E-11	4E-14	-	-
98	Californium-251	W, see ^{244}Cf	5E-1	4E-3	2E-12	-	-	-
			Bone surf (1E+0)	Bone surf (9E-3)	-	1E-14	2E-8	2E-7
		Y, see ^{244}Cf	-	1E-2	4E-12	-	-	-
			-	Bone surf (1E-2)	-	2E-14	-	-
98	Californium-252	W, see ^{244}Cf	2E+0	2E-2	8E-12	-	-	-
			Bone surf (5E+0)	Bone surf (4E-2)	-	5E-14	7E-8	7E-7
		Y, see ^{244}Cf	-	3E-2	1E-11	5E-14	-	-
98	Californium-253	W, see ^{244}Cf	2E+2	2E+0	8E-10	3E-12	-	-
			Bone surf (4E+2)	-	-	-	5E-6	5E-5
		Y, see ^{244}Cf	-	2E+0	7E-10	2E-12	-	-
98	Californium-254	W, see ^{244}Cf	2E+0	2E-2	9E-12	3E-14	3E-8	3E-7
		Y, see ^{244}Cf	-	2E-2	7E-12	2E-14	-	-
99	Einsteinium-250	W, all compounds	4E+4	5E+2	2E-7	-	6E-4	6E-3
			-	Bone surf (1E+3)	-	2E-9	-	-
99	Einsteinium-251	W, all compounds	7E+3	9E+2	4E-7	-	1E-4	1E-3
			-	Bone surf (1E+3)	-	2E-9	-	-
99	Einsteinium-253	W, all compounds	2E+2	1E+0	6E-10	2E-12	2E-6	2E-5
99	Einsteinium-254m	W, all compounds	3E+2	1E+1	4E-9	1E-11	-	-
			LLI wall (3E+2)	-	-	-	4E-6	4E-5
99	Einsteinium-254	W, all compounds	8E+0	7E-2	3E-11	-	-	-
			Bone surf (2E+1)	Bone surf (1E-1)	-	2E-13	2E-7	2E-6
100	Fermium-252	W, all compounds	5E+2	1E+1	5E-9	2E-11	6E-6	6E-5
100	Fermium-253	W, all compounds	1E+3	1E+1	4E-9	1E-11	1E-5	1E-4
100	Fermium-254	W, all compounds	3E+3	9E+1	4E-8	1E-10	4E-5	4E-4
100	Fermium-255	W, all compounds	5E+2	2E+1	9E-9	3E-11	7E-6	7E-5
100	Fermium-257	W, all compounds	2E+1	2E-1	7E-11	-	-	-
			Bone surf (4E+1)	Bone surf (2E-1)	-	3E-13	5E-7	5E-6
101	Mendelevium-257	W, all compounds	7E+3	8E+1	4E-8	-	1E-4	1E-3
			-	Bone surf (9E+1)	-	1E-10	-	-
101	Mendelevium-258	W, all compounds	3E+1	2E-1	1E-10	-	-	-
			Bone surf (5E+1)	Bone surf (3E-1)	-	5E-13	6E-7	6E-6

			Table 1 Occupational Values			Table II Effluent Concentration		Table III Releases to Sewers
			Col. 1 Oral Ingestion	Col. 2 Inhalation	Col. 3 Inhalation	Col. 1	Col. 2	Monthly Average Concentration
Atomic No.	Radionuclide	Class	ALI µCi	ALI µCi	DAC µCi/ml	Air µCi/ml	Water µCi/ml	µCi/ml
-	Any single radionuclide not listed above with decay mode other than alpha emission or spontaeneous fission and with radioactive half-life less than 2 hours	Submersion[1]	-	2E+2	1E-7	1E-9	-	-
-	Any single radionuclide not listed above with decay mode other than alpha emission or spontaeneous fission and with radioactive half-life less than 2 hours	. . . .	-	2E-1	1E-10	1E-12	1E-8	1E-7
-	Any single radionuclide not listed above that decays by alpha emission or spontaneous fission, or any mixture for which either the identity or the concentration of any radionuclide in the mixture is not known	. . . .	-	4E-4	2E-13	1E-15	2E-9	2E-8

FOOTNOTES:

[1]"Submersion" means that values given are for submersion in a hemispherical semi-infinite cloud of airborne material.

[2]These radionuclides have radiological half-lives of less than 2 hours. The total effective dose equivalent received during operations with these radionuclides might include a significant contribution from external exposure. The DAC values for all radionuclides, other than those designated Class "Submersion," are based upon the committed effective dose equivalent due to the intake of the radionuclide into the body and do NOT include potentially significant contributions to dose equivalent from external exposures. The licensee may substitute 1E-7 µCi/ml for the listed DAC to account for the submersion dose prospectively, but should use individual monitoring devices or other radiation measuring instruments that measure external exposure to demonstrate compliance with the limits. (See WAC 246-221-015(5).)

[3]For soluble mixtures of U-238, U-234, and U-235 in air, chemical toxicity may be the limiting factor (see WAC 246-221-010(5)). If the percent by weight (enrichment) of U-235 is not greater than 5, the concentration value for a 40-hour workweek is 0.2 milligrams uranium per cubic meter of air average. For any enrichment, the product of the average concentration and time of exposure during a 40-hour workweek shall not exceed 8E-3 (SA) µCi-hr/ml, where SA is the specific activity of the uranium inhaled. The specific activity for natural uranium is 6.77E-7 curies per gram U. The specific activity for other mixtures of U-238, U-235, and U-234, if not known, shall be:

SA = 3.6E-7 curies/gram U, U-depleted

$SA = [0.4 + 0.38\ (\text{enrichment}) + 0.0034\ (\text{enrichment})^2]\ E\text{-}6,\ \text{enrichment} \geq 0.72$

where enrichment is the percentage by weight of U-235, expressed as percent.

NOTE:

1. If the identity of each radionuclide in a mixture is known but the concentration of one or more of the radionuclides in the mixture is not known, the DAC for the mixture shall be the most restrictive DAC of any radionuclide in the mixture.
2. If the identity of each radionuclide in the mixture is not known, but it is known that certain radionuclides specified in this appendix are not present in the mixture, the inhalation ALI, DAC, and effluent and sewage concentrations for the mixture are the lowest values specified in this appendix for any radionuclide that is not known to be absent from the mixture; or

If it is known that Ac-227-D and Cm-250-W are not present	-	7E-4	3E-13	-	-	-
If, in addition, it is known that Ac-227-W,Y, Th-229-W,Y, Th-230-W, Th-232-W,Y, Pa-231-W,Y, Np-237-W, Pu-239-W, Pu-240-W, Pu-242-W, Am-241-W, Am-242m-W, Am-243-W, Cm-245-W, Cm-246-W, Cm-247-W, Cm-248-W, Bk-247-W, Cf-249-W, and Cf-251-W are not present	-	7E-3	3E-12	-	-	-
If, in addition, it is known that Sm-146-W, Sm-147-W, Gd-148-D,W, Gd-152-D,W, Th-228-W,Y, Th-230-Y, U-232-Y, U-233-Y, U-234-Y, U-235-Y, U-236-Y, U-238-Y, Np-236-W, Pu-236-W,Y, Pu-238-W,Y, Pu-239-Y, Pu-240-Y, Pu-242-Y, Pu-244-W,Y, Cm-243-W, Cm-244-W, Cf-248-W, Cf-249-Y, Cf-250-W,Y, Cf-251-Y, Cf-252-W,Y, and Cf-254-W,Y are not present	-	7E-2	3E-11	-	-	-
If, in addition, it is known that Pb-210-D, Bi-210m-W, Po-210-D,W, Ra-223-W, Ra-225-W, Ra-226-W, Ac-225-D,W,Y, Th-227-W,Y, U-230-D,W,Y, U-232-D,W, Pu-241-W, Cm-240-W, Cm-242-W, Cf-248-Y, Es-254-W, Fm-257-W, and Md-258-W are not present	-	7E-1	3E-10	-	-	-

If, in addition, it is known that Si-32-Y, Ti-44-Y, Fe-60-D, Sr-90-Y, Zr-93-D, Cd-113m-D, Cd-113-D, In-115-D,W, La-138-D, Lu-176-W, Hf-178m-D,W, Hf-182-D,W, Bi-210m-D, Ra-224-W, Ra-228-W, Ac-226-D,W,Y, Pa-230-W,Y, U-233-D,W, U-234-D,W, U-235-D,W, U-236-D,W, U-238-D,W, Pu-241-Y, Bk-249-W, Cf-253-W,Y, and Es-253-W are not present	-	7E+0	3E-9	-	-	-
If it is known that Ac-227-D,W,Y, Th-229-W,Y, Th-232-W,Y, Pa-231-W,Y, Cm-248-W, and Cm-250-W are not present	-	-	-	1E-14	-	-
If, in addition, it is known that Sm-146-W, Gd-148-D,W, Gd-152-D, Th-228-W,Y, Th-230-W,Y, U-232-Y, U-233-Y, U-234-Y, U-235-Y, U-236-Y, U-238-Y, U-Nat-Y, Np-236-W, Np-237-W, Pu-236-W,Y, Pu-238-W,Y, Pu-239-W,Y, Pu-240-W,Y, Pu-242-W,Y, Pu-244-W,Y, Am-241-W, Am-242m-W, Am-243-W, Cm-243-W, Cm-244-W, Cm-245-W, Cm-246-W, Cm-247-W, Bk-247-W, Cf-249-W,Y, Cf-250-W,Y, Cf-251-W,Y, Cf-252-W,Y, and Cf-254-W,Y are not present	-	-	-	1E-13	-	-
If, in addition, it is known that Sm-147-W, Gd-152-W, Pb-210-D, Bi-210m-W, Po-210-D,W, Ra-223-W, Ra-225-W, Ra-226-W, Ac-225-D,W,Y, Th-227-W,Y, U-230-D,W,Y, U-232-D,W, U-Nat-W, Pu-241-W, Cm-240-W, Cm-242-W, Cf-248-W,Y, Es-254-W, Fm-257-W, and Md-258-W are not present	-	-	-	-	1E-12	-
If, in addition, it is known that Fe-60, Sr-90, Cd-113m, Cd-113, In-115, I-129, Cs-134, Sm-145, Sm-147, Gd-148, Gd-152, Hg-194 (organic), Bi-210m, Ra-223, Ra-224, Ra-225, Ac-225, Th-228, Th-230, U-233, U-234, U-235, U-236, U-238, U-Nat, Cm-242, Cf-248, Es-254, Fm-257, and Md-258 are not present	-	-	-	-	1E-6	1E-5

3. If a mixture of radionuclides consists of uranium and its daughters in ore dust (10 µm AMAD particle distribution assumed) prior to chemical separation of the uranium from the ore, the following values may be used for the DAC of the mixture: 6E-11 µCi of gross alpha activity from uranium-238, uranium-234, thorium-230, and radium-226 per milliliter of air; 3E-11 µCi of natural uranium per milliliter of air; or 45 micrograms of natural uranium per cubic meter of air.
4. If the identity and concentration of each radionuclide in a mixture are known, the limiting values should be derived as follows: Determine, for each radionuclide in the mixture, the ratio between the concentration present in the mixture and the concentration otherwise established in this section for the specific radionuclide when not in a mixture. The sum of such ratios for all of the radionuclides in the mixture may not exceed "1" (i.e., "unity").
   Example: If radionuclides "A," "B," and "C" are present in concentrations CA, CB, and CC, and if the applicable DACs are DAC_A, DAC_B, and DAC_C, respectively, then the concentrations shall be limited so that the following relationship exists:

$$\frac{C_A}{DAC_A} + \frac{C_B}{DAC_B} + \frac{C_C}{DAC_C} \leq 1$$

[Statutory Authority: RCW 70.98.050. 94-01-073, § 246-221-290, filed 12/9/93, effective 1/9/94. Statutory Authority: RCW 43.70 040. 91-02-049 (Order 121), recodified as § 246-221-290, filed 12/27/90, effective 1/31/91. Statutory Authority: RCW 70.98.050. 81-01-011 (Order 1570), § 402-24-220, filed 12/8/80; Order 1095, § 402-24-220, filed 2/6/76; Order 1, § 402-24-220, filed 1/8/69; Rules (part), filed 10/26/66.]

Reviser's note: The brackets and enclosed material in the text of the above section occurred in the copy filed by the agency.

WAC 246-221-300 Appendix B—Minimum quantities of radioactive material requiring labeling.

Minimum Quantities[1] of Radioactive Material Requiring Labeling

Radionuclide	Quantity*(µCi)
Actinium-224	1
Actinium-225	0.01
Actinium-226	0.1
Actinium-227	0.001
Actinium-228	1
Aluminum-26	10
Americium-237	1,000
Americium-238	100
Americium-239	1,000
Americium-240	100
Americium-241	0.001
Americium-242	10
Americium-242m	0.001
Americium-243	0.001
Americium-244	10
Americium-244m	100
Americium-245	1,000
Americium-246	1,000

Minimum Quantities[1] of Radioactive Material Requiring Labeling

Radionuclide	Quantity*(µCi)
Americium-246m	1,000
Antimony-115	1,000
Antimony-116	1,000
Antimony-116m	1,000
Antimony-117	1,000
Antimony-118m	1,000
Antimony-119	1,000
Antimony-120 (16min)	1,000
Antimony-120 (5.76d)	100
Antimony-122	100
Antimony-124	10
Antimony-124m	1,000
Antimony-125	100
Antimony-126	100
Antimony-126m	1,000
Antimony-127	100
Antimony-128 (9.01h)	100
Antimony-128 (10.4min)	1,000
Antimony-129	100
Antimony-130	1,000

Minimum Quantities[1] of Radioactive Material Requiring Labeling

Radionuclide	Quantity*(μCi)
Antimony-131	1,000
Argon-39	1,000
Argon-41	1,000
Arsenic-69	1,000
Arsenic-70	1,000
Arsenic-71	100
Arsenic-72	100
Arsenic-73	100
Arsenic-74	100
Arsenic-76	100
Arsenic-77	100
Arsenic-78	1,000
Astatine-207	100
Astatine-211	10
Barium-126	1,000
Barium-128	100
Barium-131	100
Barium-131m	1,000
Barium-133	100
Barium-133m	100
Barium-135m	100
Barium-139	1,000
Barium-140	100
Barium-141	1,000
Barium-142	1,000
Berkelium-245	100
Berkelium-246	100
Berkelium-247	0.001
Berkelium-249	0.1
Berkelium-250	10
Beryllium-7	1,000
Beryllium-10	1
Bismuth-200	1,000
Bismuth-201	1,000
Bismuth-202	1,000
Bismuth-203	100
Bismuth-205	100
Bismuth-206	100
Bismuth-207	10
Bismuth-210	1
Bismuth-210m	0.1
Bismuth-212	10
Bismuth-213	10
Bismuth-214	100
Bromine-74	1,000
Bromine-74m	1,000
Bromine-75	1,000
Bromine-76	100
Bromine-77	1,000
Bromine-80	1,000
Bromine-80m	1,000
Bromine-82	100
Bromine-83	1,000
Bromine-84	1,000
Cadmium-104	1,000
Cadmium-107	1,000
Cadmium-109	1

Minimum Quantities[1] of Radioactive Material Requiring Labeling

Radionuclide	Quantity*(μCi)
Cadmium-113	100
Cadmium-113m	0.1
Cadmium-115	100
Cadmium-115m	10
Cadmium-117	1,000
Cadmium-117m	1,000
Calcium-41	100
Calcium-45	100
Calcium-47	100
Californium-244	100
Californium-246	1
Californium-248	0.01
Californium-249	0.001
Californium-250	0.001
Californium-251	0.001
Californium-252	0.001
Californium-253	0.1
Californium-254	0.001
Carbon-11	1,000
Carbon-14	1,000
Cerium-134	100
Cerium-135	100
Cerium-137	1,000
Cerium-137m	100
Cerium-139	100
Cerium-141	100
Cerium-143	100
Cerium-144	1
Cesium-125	1,000
Cesium-127	1,000
Cesium-129	1,000
Cesium-130	1,000
Cesium-131	1,000
Cesium-132	100
Cesium-134	10
Cesium-134m	1,000
Cesium-135	100
Cesium-135m	1,000
Cesium-136	10
Cesium-137	10
Cesium-138	1,000
Chlorine-36	10
Chlorine-38	1,000
Chlorine-39	1,000
Chromium-48	1,000
Chromium-49	1,000
Chromium-51	1,000
Cobalt-55	100
Cobalt-56	10
Cobalt-57	100
Cobalt-58	100
Cobalt-58m	1,000
Cobalt-60	1
Cobalt-60m	1,000
Cobalt-61	1,000
Cobalt-62m	1,000
Copper-60	1,000

Minimum Quantities[1] of Radioactive Material Requiring Labeling

Radionuclide	Quantity*(μCi)
Copper-61	1,000
Copper-64	1,000
Copper-67	1,000
Curium-238	100
Curium-240	0.1
Curium-241	1
Curium-242	0.01
Curium-243	0.001
Curium-244	0.001
Curium-245	0.001
Curium-246	0.001
Curium-247	0.001
Curium-248	0.001
Curium-249	1,000
Dysprosium-155	1,000
Dysprosium-157	1,000
Dysprosium-159	100
Dysprosium-165	1,000
Dysprosium-166	100
Einsteinium-250	100
Einsteinium-251	100
Einsteinium-253	0.1
Einsteinium-254	0.01
Einsteinium-254m	1
Erbium-161	1,000
Erbium-165	1,000
Erbium-169	100
Erbium-171	100
Erbium-172	100
Europium-145	100
Europium-146	100
Europium-147	100
Europium-148	10
Europium-149	100
Europium-150 (12.62h)	100
Europium-150 (34.2y)	1
Europium-152	1
Europium-152m	100
Europium-154	1
Europium-155	10
Europium-156	100
Europium-157	100
Europium-158	1,000
Fermium-252	1
Fermium-253	1
Fermium-254	10
Fermium-255	1
Fermium-257	0.01
Fluorine-18	1,000
Francium-222	100
Francium-223	100
Gadolinium-145	1,000
Gadolinium-146	10
Gadolinium-147	100
Gadolinium-148	0.001
Gadolinium-149	100
Gadolinium-151	10

Minimum Quantities[1] of Radioactive Material Requiring Labeling

Radionuclide	Quantity*(μCi)
Gadolinium-152	100
Gadolinium-153	10
Gadolinium-159	100
Gallium-65	1,000
Gallium-66	100
Gallium-67	1,000
Gallium-68	1,000
Gallium-70	1,000
Gallium-72	100
Gallium-73	1,000
Germanium-66	1,000
Germanium-67	1,000
Germanium-68	10
Germanium-69	1,000
Germanium-71	1,000
Germanium-75	1,000
Germanium-77	1,000
Germanium-78	1,000
Gold-193	1,000
Gold-194	100
Gold-195	10
Gold-198	100
Gold-198m	100
Gold-199	100
Gold-200	1,000
Gold-200m	100
Gold-201	1,000
Hafnium-170	100
Hafnium-172	1
Hafnium-173	1,000
Hafnium-175	100
Hafnium-177m	1,000
Hafnium-178m	0.1
Hafnium-179m	10
Hafnium-180m	1,000
Hafnium-181	10
Hafnium-182	0.1
Hafnium-182m	1,000
Hafnium-183	1,000
Hafnium-184	100
Holmium-155	1,000
Holmium-157	1,000
Holmium-159	1,000
Holmium-161	1,000
Holmium-162	1,000
Holmium-162m	1,000
Holmium-164	1,000
Holmium-164m	1,000
Holmium-166	100
Holmium-166m	1
Holmium-167	1,000
Hydrogen-3	1,000
Indium-109	1,000
Indium-110 (4.9h)	1,000
Indium-110m (69.1min)	1,000
Indium-111	100
Indium-112	1,000

Radionuclide	Minimum Quantities[1] of Radioactive Material Requiring Labeling Quantity*(μCi)
Indium-113m	1,000
Indium-114m	10
Indium-115	100
Indium-115m	1,000
Indium-116m	1,000
Indium-117	1,000
Indium-117m	1,000
Indium-119m	1,000
Iodine-120	100
Iodine-120m	1,000
Iodine-121	1,000
Iodine-123	100
Iodine-124	10
Iodine-125	1
Iodine-126	1
Iodine-128	1,000
Iodine-129	1
Iodine-130	10
Iodine-131	1
Iodine-132	100
Iodine-132m	100
Iodine-133	10
Iodine-134	1,000
Iodine-135	100
Iridium-182	1,000
Iridium-184	1,000
Iridium-185	1,000
Iridium-186	100
Iridium-187	1,000
Iridium-188	100
Iridium-189	100
Iridium-190	100
Iridium-190m	1,000
Iridium-192 (73.8d)	1
Iridium-192m (1.4min)	10
Iridium-194	100
Iridium-194m	10
Iridium-195	1,000
Iridium-195m	1,000
Iron-52	100
Iron-55	100
Iron-59	10
Iron-60	1
Krypton-74	1,000
Krypton-76	1,000
Krypton-77	1,000
Krypton-79	1,000
Krypton-81	1,000
Krypton-83m	1,000
Krypton-85	1,000
Krypton-85m	1,000
Krypton-87	1,000
Krypton-88	1,000
Lanthanum-131	1,000
Lanthanum-132	100
Lanthanum-135	1,000
Lanthanum-137	10

Radionuclide	Minimum Quantities[1] of Radioactive Material Requiring Labeling Quantity*(μCi)
Lanthanum-138	100
Lanthanum-140	100
Lanthanum-141	100
Lanthanum-142	1,000
Lanthanum-143	1,000
Lead-195m	1,000
Lead-198	1,000
Lead-199	1,000
Lead-200	100
Lead-201	1,000
Lead-202	10
Lead-202m	1,000
Lead-203	1,000
Lead-205	100
Lead-209	1,000
Lead-210	0.01
Lead-211	100
Lead-212	1
Lead-214	100
Lutetium-169	100
Lutetium-170	100
Lutetium-171	100
Lutetium-172	100
Lutetium-173	10
Lutetium-174	10
Lutetium-174m	10
Lutetium-176	100
Lutetium-176m	1,000
Lutetium-177	100
Lutetium-177m	10
Lutetium-178	1,000
Lutetium-178m	1,000
Lutetium-179	1,000
Magnesium-28	100
Manganese-51	1,000
Manganese-52	100
Manganese-52m	1,000
Manganese-53	1,000
Manganese-54	100
Manganese-56	1,000
Mendelevium-257	10
Mendelevium-258	0.01
Mercury-193	1,000
Mercury-193m	100
Mercury-194	1
Mercury-195	1,000
Mercury-195m	100
Mercury-197	1,000
Mercury-197m	100
Mercury-199m	1,000
Mercury-203	100
Molybdenum-90	100
Molybdenum-93	10
Molybdenum-93m	100
Molybdenum-99	100
Molybdenum-101	1,000
Neodymium-136	1,000

Minimum Quantities[1] of Radioactive Material Requiring Labeling

Radionuclide	Quantity*(μCi)
Neodymium-138	100
Neodymium-139	1,000
Neodymium-139m	1,000
Neodymium-141	1,000
Neodymium-147	100
Neodymium-149	1,000
Neodymium-151	1,000
Neptunium-232	100
Neptunium-233	1,000
Neptunium-234	100
Neptunium-235	100
Neptunium-236 (1.15E+5y)	0.001
Neptunium-236 (22.5h)	1
Neptunium-237	0.001
Neptunium-238	10
Neptunium-239	100
Neptunium-240	1,000
Nickel-56	100
Nickel-57	100
Nickel-59	100
Nickel-63	100
Nickel-65	1,000
Nickel-66	10
Niobium-88	1,000
Niobium-89 (122min)	1,000
Niobium-89m (66min)	1,000
Niobium-90	100
Niobium-93m	10
Niobium-94	1
Niobium-95	100
Niobium-95m	100
Niobium-96	100
Niobium-97	1,000
Niobium-98	1,000
Osmium-180	1,000
Osmium-181	1,000
Osmium-182	100
Osmium-185	100
Osmium-189m	1,000
Osmium-191	100
Osmium-191m	1,000
Osmium-193	100
Osmium-194	1
Palladium-100	100
Palladium-101	1,000
Palladium-103	100
Palladium-107	10
Palladium-109	100
Phosphorus-32	10
Phosphorus-33	100
Platinum-186	1,000
Platinum-188	100
Platinum-189	1,000
Platinum-191	100
Platinum-193	1,000
Platinum-193m	100
Platinum-195m	100

Minimum Quantities[1] of Radioactive Material Requiring Labeling

Radionuclide	Quantity*(μCi)
Platinum-197	100
Platinum-197m	1,000
Platinum-199	1,000
Platinum-200	100
Plutonium-234	10
Plutonium-235	1,000
Plutonium-236	0.001
Plutonium-237	100
Plutonium-238	0.001
Plutonium-239	0.001
Plutonium-240	0.001
Plutonium-241	0.01
Plutonium-242	0.001
Plutonium-243	1,000
Plutonium-244	0.001
Plutonium-245	100
Polonium-203	1,000
Polonium-205	1,000
Polonium-207	1,000
Polonium-210	0.1
Potassium-40	100
Potassium-42	1,000
Potassium-43	1,000
Potassium-44	1,000
Potassium-45	1,000
Praseodymium-136	1,000
Praseodymium-137	1,000
Praseodymium-138m	1,000
Praseodymium-139	1,000
Praseodymium-142	100
Praseodymium-142m	1,000
Praseodymium-143	100
Praseodymium-144	1,000
Praseodymium-145	100
Praseodymium-147	1,000
Promethium-141	1,000
Promethium-143	100
Promethium-144	10
Promethium-145	10
Promethium-146	1
Promethium-147	10
Promethium-148	10
Promethium-148m	10
Promethium-149	100
Promethium-150	1,000
Promethium-151	100
Protactinium-227	10
Protactinium-228	1
Protactinium-230	0.1
Protactinium-231	0.001
Protactinium-232	1
Protactinium-233	100
Protactinium-234	100
Radium-223	0.1
Radium-224	0.1
Radium-225	0.1
Radium-226	0.1

Minimum Quantities[1] of Radioactive Material Requiring Labeling

Radionuclide	Quantity*(μCi)
Radium-227	1,000
Radium-228	0.1
Radon-220	1
Radon-222	1
Rhenium-177	1,000
Rhenium-178	1,000
Rhenium-181	1,000
Rhenium-182 (64.0h)	100
Rhenium-182 (12.7h)	1,000
Rhenium-184	100
Rhenium-184m	10
Rhenium-186	100
Rhenium-186m	10
Rhenium-187	1,000
Rhenium-188	100
Rhenium-188m	1,000
Rhenium-189	100
Rhodium-99	100
Rhodium-99m	1,000
Rhodium-100	100
Rhodium-101	10
Rhodium-101m	1,000
Rhodium-102	10
Rhodium-102m	10
Rhodium-103m	1,000
Rhodium-105	100
Rhodium-106m	1,000
Rhodium-107	1,000
Rubidium-79	1,000
Rubidium-81	1,000
Rubidium-81m	1,000
Rubidium-82m	1,000
Rubidium-83	100
Rubidium-84	100
Rubidium-86	100
Rubidium-87	100
Rubidium-88	1,000
Rubidium-89	1,000
Ruthenium-94	1,000
Ruthenium-97	1,000
Ruthenium-103	100
Ruthenium-105	1,000
Ruthenium-106	1
Samarium-141	1,000
Samarium-141m	1,000
Samarium-142	1,000
Samarium-145	100
Samarium-146	1
Samarium-147	100
Samarium-151	10
Samarium-153	100
Samarium-155	1,000
Samarium-156	1,000
Scandium-43	1,000
Scandium-44	100
Scandium-44m	100
Scandium-46	10

Minimum Quantities[1] of Radioactive Material Requiring Labeling

Radionuclide	Quantity*(μCi)
Scandium-47	100
Scandium-48	100
Scandium-49	1,000
Selenium-70	1,000
Selenium-73	100
Selenium-73m	1,000
Selenium-75	100
Selenium-79	100
Selenium-81	1,000
Selenium-81m	1,000
Selenium-83	1,000
Silicon-31	1,000
Silicon-32	1
Silver-102	1,000
Silver-103	1,000
Silver-104	1,000
Silver-104m	1,000
Silver-105	100
Silver-106	1,000
Silver-106m	100
Silver-108m	1
Silver-111	100
Silver-112	100
Silver-115	1,000
Silver-110m	10
Sodium-22	10
Sodium-24	100
Strontium-80	100
Strontium-81	1,000
Strontium-83	100
Strontium-85	100
Strontium-85m	1,000
Strontium-87m	1,000
Strontium-89	10
Strontium-90	0.1
Strontium-91	100
Strontium-92	100
Sulfur-35	100
Tantalum-172	1,000
Tantalum-173	1,000
Tantalum-174	1,000
Tantalum-175	1,000
Tantalum-176	100
Tantalum-177	1,000
Tantalum-178	1,000
Tantalum-179	100
Tantalum-180	100
Tantalum-180m	1,000
Tantalum-182	10
Tantalum-182m	1,000
Tantalum-183	100
Tantalum-184	100
Tantalum-185	1,000
Tantalum-186	1,000
Technetium-93	1,000
Technetium-93m	1,000
Technetium-94	1,000

Minimum Quantities[1] of Radioactive Material Requiring Labeling

Radionuclide	Quantity*(μCi)
Technetium-94m	1,000
Technetium-96	100
Technetium-96m	1,000
Technetium-97	1,000
Technetium-97m	100
Technetium-98	10
Technetium-99	100
Technetium-99m	1,000
Technetium-101	1,000
Technetium-104	1,000
Tellurium-116	1,000
Tellurium-121	100
Tellurium-121m	10
Tellurium-123	100
Tellurium-123m	10
Tellurium-125m	10
Tellurium-127	1,000
Tellurium-127m	10
Tellurium-129	1,000
Tellurium-129m	10
Tellurium-131	100
Tellurium-131m	10
Tellurium-132	10
Tellurium-133	1,000
Tellurium-133m	100
Tellurium-134	1,000
Terbium-147	1,000
Terbium-149	100
Terbium-150	1,000
Terbium-151	100
Terbium-153	1,000
Terbium-154	100
Terbium-155	1,000
Terbium-156	100
Terbium-156m (24.4h)	1,000
Terbium-156m (5.0h)	1,000
Terbium-157	10
Terbium-158	1
Terbium-160	10
Terbium-161	100
Thallium-194	1,000
Thallium-194m	1,000
Thallium-195	1,000
Thallium-197	1,000
Thallium-198	1,000
Thallium-198m	1,000
Thallium-199	1,000
Thallium-200	1,000
Thallium-201	1,000
Thallium-202	100
Thallium-204	100
Thorium-226	10
Thorium-227	0.01
Thorium-228	0.001
Thorium-229	0.001
Thorium-230	0.001
Thorium-231	100

Minimum Quantities[1] of Radioactive Material Requiring Labeling

Radionuclide	Quantity*(μCi)
Thorium-232	100
Thorium-234	10
Thorium-natural	100
Thulium-162	1,000
Thulium-166	100
Thulium-167	100
Thulium-170	10
Thulium-171	10
Thulium-172	100
Thulium-173	100
Thulium-175	1,000
Tin-110	100
Tin-111	1,000
Tin-113	100
Tin-117m	100
Tin-119m	100
Tin-121	1,000
Tin-121m	100
Tin-123	10
Tin-123m	1,000
Tin-125	10
Tin-126	10
Tin-127	1,000
Tin-128	1,000
Titanium-44	1
Titanium-45	1,000
Tungsten-176	1,000
Tungsten-177	1,000
Tungsten-178	1,000
Tungsten-179	1,000
Tungsten-181	1,000
Tungsten-185	100
Tungsten-187	100
Tungsten-188	10
Uranium-230	0.01
Uranium-231	100
Uranium-232	0.001
Uranium-233	0.001
Uranium-234	0.001
Uranium-235	0.001
Uranium-236	0.001
Uranium-237	100
Uranium-238	100
Uranium-239	1,000
Uranium-240	100
Uranium-natural	100
Vanadium-47	1,000
Vanadium-48	100
Vanadium-49	1,000
Xenon-120	1,000
Xenon-121	1,000
Xenon-122	1,000
Xenon-123	1,000
Xenon-125	1,000
Xenon-127	1,000
Xenon-129m	1,000
Xenon-131m	1,000

Minimum Quantities[1] of Radioactive Material Requiring Labeling

Radionuclide	Quantity*(µCi)
Xenon-133	1,000
Xenon-133m	1,000
Xenon-135	1,000
Xenon-135m	1,000
Xenon-138	1,000
Ytterbium-162	1,000
Ytterbium-166	100
Ytterbium-167	1,000
Ytterbium-169	100
Ytterbium-175	100
Ytterbium-177	1,000
Ytterbium-178	1,000
Yttrium-86	100
Yttrium-86m	1,000
Yttrium-87	100
Yttrium-88	10
Yttrium-90	10
Yttrium-90m	1,000
Yttrium-91	10
Yttrium-91m	1,000
Yttrium-92	100
Yttrium-93	100
Yttrium-94	1,000
Yttrium-95	1,000
Zinc-62	100
Zinc-63	1,000
Zinc-65	10
Zinc-69	1,000
Zinc-69m	100
Zinc-71m	1,000
Zinc-72	100
Zirconium-86	100
Zirconium-88	10
Zirconium-89	100
Zirconium-93	1
Zirconium-95	10
Zirconium-97	100
Any alpha-emitting radionuclide not listed above or mixtures of alpha-emitters of unknown composition	0.001
Any radionuclide other than alpha-emitting radionuclides not listed above, or mixtures of beta emitters of unknown composition	0.01

Note: For purposes of WAC 246-221-120(8), 246-221-130 (7)(a), and 246-221-240(1) where there is involved a combination of radionuclides in known amounts, the limit for the combination shall be derived as follows: Determine, for each radionuclide in the combination, the ratio between the quantity present in the combination and the limit otherwise established for the specific radionuclide when not in combination. The sum of such ratios for all radionuclides in the combination may not exceed "1" — that is, unity.

[1] The quantities listed above were derived by taking 1/10th of the most restrictive ALI listed in Table I, Columns 1 and 2, of WAC 246-221-290, rounding to the nearest factor of 10, and constraining the values listed between 37 Bq and 37 MBq (0.001 and 1,000µCi). Values of 3.7 MBq (100 µCi) have been assigned for radionuclides having a radioactive half-life in excess of E+9 years, except rhenium, 37 MBq (1,000 µCi), to take into account their low specific activity.

* To convert µCi to kBq, multiply the µCi value by 37.

[Statutory Authority: RCW 70.98.050. 94-01-073, § 246-221-300, filed 12/9/93, effective 1/9/94. Statutory Authority: RCW 70.98.050 and 70.98.-080. 91-15-112 (Order 184), § 246-221-300, filed 7/24/91, effective 8/24/91. Statutory Authority: RCW 43.70 040. 91-02-049 (Order 121), recodified as § 246-221-300, filed 12/27/90, effective 1/31/91. Statutory Authority: RCW 70.98.080. 83-19-050 (Order 2026), § 402-24-230, filed 9/16/83. Statutory Authority: RCW 70.98.050. 81-01-011 (Order 1570), § 402-24-230, filed 12/8/80; Order 1095, § 402-24-230, filed 2/6/76; Order 708, § 402-24-230, filed 8/24/72; Order 1, § 402-24-230, filed 7/2/71; Order 1, § 402-24-230, filed 1/8/69; Rules (part), filed 10/26/66.]

Chapter 246-222 WAC

RADIATION PROTECTION—WORKER RIGHTS

WAC

246-222-001 Purpose and scope.
246-222-020 Posting of notices to workers.
246-222-030 Instructions to workers.
246-222-040 Notifications and reports to individuals.
246-222-050 Presence of representatives of licensees or registrants and workers during inspection.
246-222-060 Consultation with workers during inspections.
246-222-070 Requests by workers for inspections.
246-222-080 Inspections not warranted—Informal review.

WAC 246-222-001 Purpose and scope. This chapter establishes requirements for notices, instructions and reports by licensees or registrants to individuals engaged in work under a license or registration and options available to such individuals in connection with department inspections of licensees or registrants to ascertain compliance with the provisions of the act and regulations, orders and licenses issued thereunder regarding radiological working conditions. The regulations in this chapter apply to all persons who receive, possess, use, own or transfer a source of radiation licensed by or registered with the department pursuant to the regulations in chapters 246-224, 246-232, and 246-235 WAC. The definitions contained in WAC 246-220-010 also apply to this chapter.

[Statutory Authority: RCW 70.98.050 and 70.98.080. 91-15-112 (Order 184), § 246-222-001, filed 7/24/91, effective 8/24/91. Statutory Authority: RCW 43.70.040. 91-02-049 (Order 121), recodified as § 246-222-001, filed 12/27/90, effective 1/31/91. Statutory Authority: RCW 70.98.080. 87-01-031 (Order 2450), § 402-48-010, filed 12/11/86. Statutory Authority: RCW 70.98.050. 81-01-011 (Order 1570), § 402-48-010, filed 12/8/80; Order 1084, § 402-48-010, filed 1/14/76.]

WAC 246-222-020 Posting of notices to workers. (1) Each licensee or registrant shall post current copies of the following documents:

(a) The regulations in this chapter and in chapter 246-221 WAC;

(b) The license, conditions or documents incorporated into the license by reference and amendments thereto;

(c) The operating procedures applicable to work under the license or registration;

(d) Any notice of noncompliance involving radiological working conditions, proposed imposition of civil penalty, order issued pursuant to chapter 246-220 WAC, or any response from the licensee or registrant.

(2) If posting of a document specified in subsection (1)(a), (b), or (c) of this section is not practicable, the licensee or registrant may post a notice which describes the document and states where it may be examined.

(3) Each licensee or registrant shall conspicuously post pertinent emergency procedures when emergency procedures are required by the department.

(4) Properly completed department Form RHF-3 "Notice to employees," shall be posted by each licensee or registrant wherever individuals work in or frequent any portion of a restricted area.

(5) Documents, notices or forms posted pursuant to this section shall appear in a sufficient number of places to permit individuals engaged in work under the license or registration to observe them on the way to or from any particular work location to which the document applies, shall be conspicuous, and shall be replaced if defaced or altered.

(6) Department documents posted pursuant to subsection (1)(d) of this section shall be posted as specified by subsection (5) of this section within five working days after receipt of the documents from the department; the licensee's or registrant's response, if any, shall be posted within five working days after dispatch from the licensee or registrant. Such documents shall remain posted for a minimum of five working days or until action correcting the item(s) of noncompliance has been completed, whichever is later.

[Statutory Authority: RCW 70.98.050. 94-01-073, § 246-222-020, filed 12/9/93, effective 1/9/94. Statutory Authority: RCW 70.98.050 and 70.98.-080. 91-15-112 (Order 184), § 246-222-020, filed 7/24/91, effective 8/24/91. Statutory Authority: RCW 43.70.040. 91-02-049 (Order 121), recodified as § 246-222-020, filed 12/27/90, effective 1/31/91. Statutory Authority: RCW 70.98.080. 87-01-031 (Order 2450), § 402-48-020, filed 12/11/86. Statutory Authority: RCW 70.98.050. 81-01-011 (Order 1570), § 402-48-020, filed 12/8/80; Order 1084, § 402-48-020, filed 1/14/76.]

WAC 246-222-030 Instructions to workers. (1) All individuals likely to receive in a year an occupational dose in excess of 1 mSv (100 mrem):

(a) Shall be kept informed of the storage, transfer, or use of sources of radiation in the licensee's or registrant's facility;

(b) Shall be instructed in the health protection considerations for the individual and potential offspring associated with exposure to radiation or radioactive material, in precautions or procedures to minimize exposure, and in the purposes and functions of protective devices employed;

(c) Shall be instructed in, and instructed to observe, to the extent within the worker's control, the applicable provisions of these regulations, department form RHF-3 "Notice to employees," and license conditions for the protection of personnel from exposures to radiation or radioactive material;

(d) Shall be instructed that any worker or representative of workers who believes that a violation of the regulations, license conditions, or unnecessary exposure to radiation exists or occurred, may request an inspection by the department by oral or written notification. The notification shall set forth specific grounds for the complaint. Any such notification to the department is confidential;

(e) Shall be instructed of their right to notify the department if the individual suspects improper actions by a licensee/registrant, or conditions which may lead to a violation of these regulations, the license/registration, or unnecessary exposure to radiation or radioactive materials;

(f) Shall be instructed that employment discrimination by a licensee/registrant against an employee because of actions described in this chapter is prohibited;

(g) Shall be instructed as to their responsibility to report promptly to the licensee or registrant any condition which may constitute, lead to, or cause a violation of the act, these regulations, and licenses or unnecessary exposure to radiation or radioactive material;

(h) Shall be instructed in the appropriate response to warnings made in the event of any unusual occurrence or malfunction that may involve exposure to radiation or radioactive material; and

(i) Shall be advised as to the radiation exposure reports which workers shall be furnished pursuant to WAC 246-222-040.

(2) Records of these instructions described in subsection (1) of this section for all individuals working in, or frequenting any portion of, a restricted area shall be maintained for inspection by the department until further notice. These records shall include a copy of this section, or all the information contained in this section, along with a dated verification signature by the employee stating that the individual has received an explanation of the instructions contained in this section.

(3) In determining those individuals subject to the requirements of subsection (1) of this section, licensees and registrants shall take into consideration assigned activities during normal and abnormal situations involving exposure to sources of radiation which can reasonably be expected to occur during the life of a licensed or registered facility. The extent of these instructions shall be commensurate with potential radiological health protection considerations present in the workplace.

[Statutory Authority: RCW 70.98.050. 99-05-012, § 246-222-030, filed 2/5/99, effective 3/8/99; 94-01-073, § 246-222-030, filed 12/9/93, effective 1/9/94. Statutory Authority: RCW 70.98.050 and 70.98.080. 91-15-112 (Order 184), § 246-222-030, filed 7/24/91, effective 8/24/91. Statutory Authority: RCW 43.70.040. 91-02-049 (Order 121), recodified as § 246-222-030, filed 12/27/90, effective 1/31/91. Statutory Authority: RCW 70.98.080. 83-19-050 (Order 2026), § 402-48-030, filed 9/16/83. Statutory Authority: RCW 70.98.050. 81-01-011 (Order 1570), § 402-48-030, filed 12/8/80; Order 1084, § 402-48-030, filed 1/14/76.]

WAC 246-222-040 Notifications and reports to individuals. (1) Radiation exposure data for an individual and the results of any measurements, analyses, and calculations of radioactive material deposited or retained in the body of an individual shall be reported to the individual as specified in this section. The information reported shall include data and results obtained pursuant to these regulations, orders, and license conditions, as shown in records maintained by the licensee or registrant pursuant to these regulations. Each notification and report shall:

(a) Be in writing;

(b) Include appropriate identifying data such as the name of the licensee or registrant, the name of the individual, and the individual's identification number, preferably Social Security number;

(c) Include the individual's exposure information; and

(d) Contain the following statement:

> "This report is furnished to you under the provisions of the Washington state department of health, division of radiation protection, rules and regulations for radiation protection. You should preserve this report for further reference."

(2) Each licensee or registrant shall advise each worker annually of the worker's dose as shown in records maintained by the licensee or registrant pursuant to WAC 246-221-090, 246-221-100, and 246-221-230.

(3) At the request of a worker formerly engaged in work controlled by the licensee or the registrant, each licensee or registrant shall furnish to each worker or former worker a report of the worker's dose due to exposure to radiation or radioactive material upon termination. For the purposes of this section, termination means the end of employment with the licensee or the end of a work assignment in the licensee's restricted area(s) in a given calendar quarter without expectation, or specific scheduling, of reentry into such restricted area(s) during the remainder of that calendar quarter. Such report shall be furnished within thirty days from the time the request is made, or within thirty days after the exposure of the individual has been determined by the licensee or registrant, whichever is later; shall cover, within the period of time specified in the request, the dose record for each year in which the worker's activities involved exposure to radiation from radioactive material licensed by, or radiation machines registered with the department; and shall include the dates and locations of work under the license or registration in which the worker participated during this period.

(4) In addition to the requirements of subsection (3) of this section, at the request of a worker who is terminating employment with the licensee or registrant in work involving radiation exposure, during the current year, each licensee or registrant shall provide at termination to each such worker, or to the worker's designee a written report regarding the radiation dose received by that worker from operations of the licensee or registrant during the current year. If the most recent individual monitoring results are not available at that time, a written estimate of the dose shall be provided together with a clear indication that this is an estimate.

(5) When a licensee or registrant is required pursuant to WAC 246-221-260 to report to the department any exposure of an individual to radiation or radioactive material, the licensee or the registrant shall also provide the individual a written report on the individual's exposure data included therein. Such reports shall be transmitted at a time not later than the transmittal to the department.

[Statutory Authority: RCW 70.98.050. 94-01-073, § 246-222-040, filed 12/9/93, effective 1/9/94. Statutory Authority: RCW 70.98.050 and 70.98.-080. 91-15-112 (Order 184), § 246-222-040, filed 7/24/91, effective 8/24/91. Statutory Authority: RCW 43.70.040. 91-02-049 (Order 121), recodified as § 246-222-040, filed 12/27/90, effective 1/31/91. Statutory Authority: RCW 70.98.080. 87-01-031 (Order 2450), § 402-48-040, filed 12/11/86; 83-19-050 (Order 2026), § 402-48-040, filed 9/16/83. Statutory Authority: RCW 70.98.050. 81-01-011 (Order 1570), § 402-48-040, filed 12/8/80; Order 1084, § 402-48-040, filed 1/14/76.]

WAC 246-222-050 Presence of representatives of licensees or registrants and workers during inspection. (1) Each licensee or registrant shall afford to the department at all reasonable times opportunity to inspect materials, machines, activities, facilities, premises, and records pursuant to these regulations.

(2) During an inspection, department inspectors may consult privately with workers as specified in WAC 246-222-060. The licensee or registrant may accompany department inspectors during other phases of an inspection.

(3) If, at the time of inspection, an individual has been authorized by the workers to represent them during department inspections, the licensee or registrant shall notify the inspectors of such authorization and shall give the workers' representative an opportunity to accompany the inspectors during the inspection of physical working conditions.

(4) Each workers' representative shall be routinely engaged in work under control of the licensee or registrant and shall have received instructions as specified in WAC 246-222-030.

(5) Different representatives of licensees or registrants and workers may accompany the inspectors during different phases of an inspection if there is no resulting interference with the conduct of the inspection. However, only one workers' representative at a time may accompany the inspectors.

(6) With the approval of the licensee or registrant and the workers' representative an individual who is not routinely engaged in work under control of the licensee or registrant, for example, a consultant to the licensee or registrant or to the workers' representative, shall be afforded the opportunity to accompany department inspectors during the inspection of physical working conditions.

(7) Notwithstanding the other provisions of this section, department inspectors are authorized to refuse to permit accompaniment by any individual who deliberately interferes with a fair and orderly inspection. With regard to any area containing proprietary information, the workers' representative for that area shall be an individual previously authorized by the licensee or registrant to enter that area.

[Statutory Authority: RCW 70.98.050 and 70.98.080. 91-15-112 (Order 184), § 246-222-050, filed 7/24/91, effective 8/24/91. Statutory Authority: RCW 43.70.040. 91-02-049 (Order 121), recodified as § 246-222-050, filed 12/27/90, effective 1/31/91; Order 1084, § 402-48-050, filed 1/14/76.]

WAC 246-222-060 Consultation with workers during inspections. (1) Department inspectors may consult privately with workers concerning matters of occupational radiation protection and other matters related to applicable provisions of department regulations and licenses to the extent the inspectors deem necessary for the conduct of an effective and thorough inspection.

(2) During the course of an inspection any worker may bring privately to the attention of the inspectors, either orally or in writing, any past or present condition which the worker has reason to believe may have contributed to or caused any violation of the act, these regulations, or license condition, or any unnecessary exposure of an individual to radiation from licensed radioactive material or a registered radiation machine under the licensee's or registrant's control. Any such notice in writing shall comply with the requirements of WAC 246-222-070(1).

(3) The provisions of subsection (2) of this section shall not be interpreted as authorization to disregard instructions pursuant to WAC 246-222-030.

[Statutory Authority: RCW 70.98.050 and 70.98.080. 91-15-112 (Order 184), § 246-222-060, filed 7/24/91, effective 8/24/91. Statutory Authority: RCW 43.70.040. 91-02-049 (Order 121), recodified as § 246-222-060, filed 12/27/90, effective 1/31/91; Order 1084, § 402-48-060, filed 1/14/76.]

WAC 246-222-070 Requests by workers for inspections. (1) Any worker or representative of workers who

believes that a violation of the act, of these regulations, or of license conditions exists or has occurred in work under a license or registration with regard to radiological working conditions in which the worker is engaged, may request an inspection by giving notice of the alleged violation to the Washington state department of health, division of radiation protection. Any such notice shall be in writing, shall set forth the specific grounds for the notice, and shall be signed by the worker or representative of the workers. A copy shall be provided to the licensee or registrant by the office of radiation protection no later than at the time of inspection except that, upon the request of the worker giving such notice, his or her name and the name of individuals referred to therein shall not appear in such copy or on any record published, released, or made available by the department, except for good cause shown.

(2) If, upon receipt of such notice, the inspector for the division of radiation protection determines that the complaint meets the requirements set forth in subsection (1) of this section, and that there are reasonable grounds to believe that the alleged violation exists or has occurred, the inspector shall cause an inspection to be made as soon as practicable, to determine if such alleged violation exists or has occurred. Inspections pursuant to this section need not be limited to matters referred to in the complaint.

(3) No licensee or registrant shall discharge or in any manner discriminate against any worker because such worker has filed any complaint or instituted or caused to be instituted any proceeding under these regulations or has testified or is about to testify in any such proceeding or because of the exercise by such worker on behalf of the worker or other workers of any option afforded by this chapter.

[Statutory Authority: RCW 70.98.050. 94-01-073, § 246-222-070, filed 12/9/93, effective 1/9/94. Statutory Authority: RCW 70.98.050 and 70.98.080. 91-15-112 (Order 184), § 246-222-070, filed 7/24/91, effective 8/24/91. Statutory Authority: RCW 43.70.040. 91-02-049 (Order 121), recodified as § 246-222-070, filed 12/27/90, effective 1/31/91. Statutory Authority: RCW 70.98.080. 87-01-031 (Order 2450), § 402-48-070, filed 12/11/86; Order 1084, § 402-48-070, filed 1/14/76.]

WAC 246-222-080 Inspections not warranted—Informal review. (1) If the department of health, division of radiation protection determines, with respect to a complaint under WAC 246-222-070 that an inspection is not warranted because there are no reasonable grounds to believe that a violation exists or has occurred, the division of radiation protection shall notify the complainant in writing of such determination.

(a) If the complaint resulted from activities concerning naturally occurring or accelerator produced radioactive materials and/or radiation producing machines: The complainant may obtain review of such determination by submitting a written statement of position to the Assistant Director, Division of Industrial Safety and Health, P.O. Box 4600, Olympia, Washington 98504-4600. Such request for informal review will be processed according to the provisions of WAC 296-350-460 and the provisions of the interagency agreement between the department of labor and industries and the department of health, division of radiation protection, if any.

(b) If the complaint resulted from activities concerning byproduct material, source material, and/or special nuclear material: The complainant may obtain review of such determination by submitting a written statement of position with the Department of Health, Division of Radiation Protection, P.O. Box 47827, Olympia, Washington 98504-7827 (360 236-3300), who will provide the licensee or registrant with a copy of such statement by certified mail, excluding, at the request of the complainant, the name of the complainant. The licensee or registrant may submit an opposing written statement of position with the department of health, division of radiation protection, who will provide the complainant with a copy of such statement by certified mail. Upon the request of the complainant, the department of health may hold an informal conference in which the complainant and the licensee or registrant may orally present their views. An informal conference may also be held at the request of the licensee or registrant, but disclosure of the identity of the complainant will be made only following receipt of written authorization from the complainant. After considering all written or oral views presented, the department of health shall affirm, modify, or reverse the determination of the division of radiation protection and furnish the complainant and the licensee or registrant a written notification of the decision and the reason therefor.

(2) If the division of radiation protection determines that an inspection is not warranted because the requirements of WAC 246-222-070(1) have not been met, it shall notify the complainant in writing of such determination. Such determination shall be without prejudice to the filing of a new complaint meeting the requirements of WAC 246-222-070(1).

[Statutory Authority: RCW 70.98.050. 98-13-037, § 246-222-080, filed 6/8/98, effective 7/9/98; 94-01-073, § 246-222-080, filed 12/9/93, effective 1/9/94. Statutory Authority: RCW 70.98.050 and 70.98.080. 91-15-112 (Order 184), § 246-222-080, filed 7/24/91, effective 8/24/91. Statutory Authority: RCW 43.70.040. 91-02-049 (Order 121), recodified as § 246-222-080, filed 12/27/90, effective 1/31/91. Statutory Authority: RCW 70.98.080. 87-01-031 (Order 2450), § 402-48-080, filed 12/11/86; Order 1084, § 402-48-080, filed 1/14/76.]

Chapter 246-224 WAC

RADIATION PROTECTION—RADIATION MACHINE ASSEMBLY AND REGISTRATION

WAC

246-224-0001	Purpose.
246-224-0010	Definitions.
246-224-0020	Who must register a radiation machine?
246-224-0030	Are there any radiation machines within Washington state that do not have to be registered?
246-224-0040	What if we have separate locations with radiation machines?
246-224-0050	When and how do I register?
246-224-0060	Are there other requirements besides registration?
246-224-0070	When and how do I report changes to my registration?
246-224-0080	When and how do I renew my registration?
246-224-0090	What are my obligations if I close my facility or get rid of a machine?
246-224-0100	What are the responsibilities of the X-ray agent?
246-224-0110	What if I want to bring a radiation machine into Washington state for temporary use from out-of-state?
246-224-0120	What happens if I do not register my radiation machine?

DISPOSITION OF SECTIONS FORMERLY CODIFIED IN THIS CHAPTER

246-224-001 Purpose and scope. [Statutory Authority: RCW 70.98.-050 and 70.98.080. 91-15-083 (Order 183), § 246-224-001, filed 7/23/91, effective 8/23/91. Statutory Authority: RCW 43.70.040. 91-02-049 (Order 121), recodified as § 246-224-001, filed 12/27/90, effective 1/31/91. Statutory Authority: RCW 70.98.050. 81-01-011 (Order 1570), § 402-16-210, filed 12/8/80; Order 1084,

§ 402-16-210, filed 1/14/76. Formerly WAC 402-16-010.] Repealed by 02-14-050, filed 6/27/02, effective 7/28/02. Statutory Authority: RCW 70.98.050 and [70.98.]080.

246-224-010 Exemptions. [Statutory Authority: RCW 43.70.040. 91-02-049 (Order 121), recodified as § 246-224-010, filed 12/27/90, effective 1/31/91; Order 1084, § 402-16-220, filed 1/14/76. Formerly WAC 402-16-100.] Repealed by 02-14-050, filed 6/27/02, effective 7/28/02. Statutory Authority: RCW 70.98.050 and [70.98.]080.

246-224-020 Application for registration of radiation machine facilities. [Statutory Authority: RCW 70.98.050 and 70.98.-080. 91-15-083 (Order 183), § 246-224-020, filed 7/23/91, effective 8/23/91. Statutory Authority: RCW 43.70.040. 91-02-049 (Order 121), recodified as § 246-224-020, filed 12/27/90, effective 1/31/91. Statutory Authority: RCW 70.98.080. 83-19-050 (Order 2026), § 402-16-230, filed 9/16/83. Statutory Authority: RCW 70.98.050. 81-01-011 (Order 1570), § 402-16-230, filed 12/8/80; Order 1084, § 402-16-230, filed 1/14/76. Formerly WAC 402-16-020 and 402-16-040.] Repealed by 02-14-050, filed 6/27/02, effective 7/28/02. Statutory Authority: RCW 70.98.050 and [70.98.]080.

246-224-030 Issuance of certificate of registration. [Statutory Authority: RCW 70.98.050 and 70.98.080. 91-15-083 (Order 183), § 246-224-030, filed 7/23/91, effective 8/23/91. Statutory Authority: RCW 43.70.040. 91-02-049 (Order 121), recodified as § 246-224-030, filed 12/27/90, effective 1/31/91. Statutory Authority: RCW 70.98.080. 83-19-050 (Order 2026), § 402-16-232, filed 9/16/83. Statutory Authority: RCW 70.98.050. 81-01-011 (Order 1570), § 402-16-232, filed 12/8/80.] Repealed by 94-01-073, filed 12/9/93, effective 1/9/94. Statutory Authority: RCW 70.98.050.

246-224-040 Expiration of registration. [Statutory Authority: RCW 70.98.050. 94-01-073, § 246-224-040, filed 12/9/93, effective 1/9/94. Statutory Authority: RCW 70.98.050 and 70.98.080. 91-15-083 (Order 183), § 246-224-040, filed 7/23/91, effective 8/23/91. Statutory Authority: RCW 43.70.040. 91-02-049 (Order 121), recodified as § 246-224-040, filed 12/27/90, effective 1/31/91. Statutory Authority: RCW 70.98.080. 83-19-050 (Order 2026), § 402-16-234, filed 9/16/83. Statutory Authority: RCW 70.98.050. 81-01-011 (Order 1570), § 402-16-234, filed 12/8/80.] Repealed by 97-20-101, filed 9/29/97, effective 10/30/97. Statutory Authority: RCW 43.70.040.

246-224-050 Renewal of registration. [Statutory Authority: RCW 70.98.050. 94-01-073, § 246-224-050, filed 12/9/93, effective 1/9/94. Statutory Authority: RCW 70.98.050 and 70.98.080. 91-15-083 (Order 183), § 246-224-050, filed 7/23/91, effective 8/23/91. Statutory Authority: RCW 43.70.040. 91-02-049 (Order 121), recodified as § 246-224-050, filed 12/27/90, effective 1/31/91. Statutory Authority: RCW 70.98.080. 83-19-050 (Order 2026), § 402-16-238, filed 9/16/83. Statutory Authority: RCW 70.98.050. 81-01-011 (Order 1570), § 402-16-238, filed 12/8/80.] Repealed by 02-14-050, filed 6/27/02, effective 7/28/02. Statutory Authority: RCW 70.98.050 and [70.98.]080.

246-224-060 Separate locations. [Statutory Authority: RCW 70.98.050 and 70.98.080. 91-15-083 (Order 183), § 246-224-060, filed 7/23/91, effective 8/23/91. Statutory Authority: RCW 43.70.040. 91-02-049 (Order 121), recodified as § 246-224-060, filed 12/27/90, effective 1/31/91. Statutory Authority: RCW 70.98.080. 83-19-050 (Order 2026), § 402-16-240, filed 9/16/83. Statutory Authority: RCW 70.98.050. 81-01-011 (Order 1570), § 402-16-240, filed 12/8/80; Order 1084, § 402-16-240, filed 1/14/76. Formerly WAC 402-16-050.] Repealed by 02-14-050, filed 6/27/02, effective 7/28/02. Statutory Authority: RCW 70.98.050 and [70.98.]080.

246-224-070 Report of changes. [Statutory Authority: RCW 70.98.050. 94-01-073, § 246-224-070, filed 12/9/93, effective 1/9/94. Statutory Authority: RCW 70.98.050 and 70.98.080. 91-15-083 (Order 183), § 246-224-070, filed 7/23/91, effective 8/23/91. Statutory Authority: RCW 43.70.040. 91-02-049 (Order 121), recodified as § 246-224-070, filed 12/27/90, effective 1/31/91. Statutory Authority: RCW 70.98.080. 83-19-050 (Order 2026), § 402-16-250, filed 9/16/83. Statutory Authority: RCW 70.98.050. 81-01-011 (Order 1570), § 402-16-250, filed 12/8/80; Order 1084, § 402-16-250, filed 1/14/76. Formerly WAC 402-16-060.] Repealed by 02-14-050, filed 6/27/02, effective 7/28/02. Statutory Authority: RCW 70.98.050 and [70.98.]080.

246-224-080 Approval not implied. [Statutory Authority: RCW 70.98.050 and 70.98.080. 91-15-083 (Order 183), § 246-224-080, filed 7/23/91, effective 8/23/91. Statutory Authority: RCW 43.70.040. 91-02-049 (Order 121), recodified as § 246-224-080, filed 12/27/90, effective 1/31/91; Order 1084, § 402-16-260, filed 1/14/76. Formerly WAC 402-16-070.] Repealed by 97-20-101, filed 9/29/97, effective 10/30/97. Statutory Authority: RCW 43.70.040.

246-224-090 Repair person, assembler, or installer obligation. [Statutory Authority: RCW 70.98.050 and 70.98.080. 91-15-083 (Order 183), § 246-224-090, filed 7/23/91, effective 8/23/91. Statutory Authority: RCW 43.70.040. 91-02-049 (Order 121), recodified as § 246-224-090, filed 12/27/90, effective 1/31/91. Statutory Authority: RCW 70.98.080. 83-19-050 (Order 2026), § 402-16-270, filed 9/16/83. Statutory Authority: RCW 70.98.050. 81-01-011 (Order 1570), § 402-16-270, filed 12/8/80; Order 1084, § 402-16-270, filed 1/14/76. Formerly WAC 402-16-090.] Repealed by 02-14-050, filed 6/27/02, effective 7/28/02. Statutory Authority: RCW 70.98.050 and [70.98.]080.

246-224-100 Out-of-state radiation machines. [Statutory Authority: RCW 70.98.050 and 70.98.080. 91-15-083 (Order 183), § 246-224-100, filed 7/23/91, effective 8/23/91. Statutory Authority: RCW 43.70.040. 91-02-049 (Order 121), recodified as § 246-224-100, filed 12/27/90, effective 1/31/91. Statutory Authority: RCW 70.98.050. 81-01-011 (Order 1570), § 402-16-280, filed 12/8/80; Order 1084, § 402-16-280, filed 1/14/76. Formerly WAC 402-16-110.] Repealed by 02-14-050, filed 6/27/02, effective 7/28/02. Statutory Authority: RCW 70.98.050 and [70.98.]080.

WAC 246-224-0001 Purpose. The purpose of this chapter is to regulate sources of ionizing radiation as required by RCW 70.98.050 and 70.98.080. This chapter provides for the registration of all radiation machines installed, manufactured, tested, used, or located in Washington state.

[Statutory Authority: RCW 70.98.050 and [70.98.]080. 02-14-050, § 246-224-0001, filed 6/27/02, effective 7/28/02.]

WAC 246-224-0010 Definitions. "Agent" means a person, company, or dealer; which assembles, installs, repairs, sells, or leases X-ray machines.

"Application" means, for the purpose of this chapter, the master business application and appropriate addenda used by the master license service of the department of licensing (DOL).

"Department" means the department of health.

"DOL" means the department of licensing.

"Facility" means all buildings, structures, and operations on one contiguous site or identified by one physical location address designation at which one or more radiation machines are installed, manufactured, tested, or used.

"FDA" means the United States Food and Drug Administration.

"MLS" means the department of licensing's master license service.

"Radiation" means, for the purposes of this chapter, ionizing radiation, including X-ray, electron beam, and other machine produced particulate radiation.

"Radiation machine" means, for purposes of this chapter, a device that, when operated, produces X-ray or electron radiation, in a prescribed manner, with defined characteristics, techniques, or parameters. It does not include devices with radioactive material as the only source of radiation.

"Registrant" means the owner or controller of the radiation machine who is responsible for the safe operation of the radiation machine.

"Registration" means providing required information and continuing contact with the department by any person possessing a radiation machine in accordance with regulations adopted by the department.

"Storage" means the status of a radiation machine that is approved by the department as being unable to produce radiation without substantial effort at set-up, reassembly, or reinstallation. For facilities with a radiation control authority, (e.g., radiation safety office) a locking or disabling procedure may serve to provide this status.

[Statutory Authority: RCW 19.02.050, 43.20B.020, 43.70.110, 70.98.050, and 70.98.080. 08-09-079, § 246-224-0010, filed 4/16/08, effective 5/17/08. Statutory Authority: RCW 70.98.050 and [70.98.]080. 02-14-050, § 246-224-0010, filed 6/27/02, effective 7/28/02.]

WAC 246-224-0020 Who must register a radiation machine? Any X-ray facility within Washington state must register with the department.

[Statutory Authority: RCW 70.98.050 and [70.98.]080. 02-14-050, § 246-224-0020, filed 6/27/02, effective 7/28/02.]

WAC 246-224-0030 Are there any radiation machines within Washington state that do not have to be registered? Machines do not need to be registered when:

(1) Electronic equipment (including television receivers) produces incidental X rays provided that the dose equivalent rate does not exceed 5 μSv/hr (0.5 mrem/hr) at 5 cm from any accessible equipment surface averaged over an area of 10 square centimeters;

(2) Radiation machines are in transit;

(3) Radiation machines are held for sale or lease by X-ray agents; or

(4) The department allows an exemption.

[Statutory Authority: RCW 70.98.050 and [70.98.]080. 02-14-050, § 246-224-0030, filed 6/27/02, effective 7/28/02.]

WAC 246-224-0040 What if we have separate locations with radiation machines? (1) Geographically separate facilities must register separately even if these separate facilities are under one administrative control (e.g., several satellite clinics operated by one health care institution).

(2) Each facility must designate a contact person.

(3) If machines are routinely moved between or among separate facilities, notify DOL prior to the machine being moved, or notify the department at the time shielding plans are submitted for review.

[Statutory Authority: RCW 19.02.050, 43.20B.020, 43.70.110, 70.98.050, and 70.98.080. 08-09-079, § 246-224-0040, filed 4/16/08, effective 5/17/08. Statutory Authority: RCW 70.98.050 and [70.98.]080. 02-14-050, § 246-224-0040, filed 6/27/02, effective 7/28/02.]

WAC 246-224-0050 When and how do I register? (1) You must register with the department through submission of a master business license application and appropriate addendum used by MLS no later than fifteen calendar days of initial use unless shielding plans review is required.

(2) Facilities requiring shielding plan review must register with DOL and submit plans to the department for review prior to construction or installation of radiation machines according to WAC 246-225-030, General requirements—Plan review.

(3) Registration is valid for one year from the department approval date, or any other date as may be determined through partnership with MLS.

(4) Pay applicable registration fees according to WAC 246-254-053, Radiation machine facility registration fees.

(5) Submit registration information and applicable fees to MLS in accordance with their instructions.

Note: For DOL information, visit the following web site: http://www.dol.wa.gov/business/xray.htm.

[Statutory Authority: RCW 19.02.050, 43.20B.020, 43.70.110, 70.98.050, and 70.98.080. 08-09-079, § 246-224-0050, filed 4/16/08, effective 5/17/08. Statutory Authority: RCW 70.98.050 and [70.98.]080. 02-14-050, § 246-224-0050, filed 6/27/02, effective 7/28/02.]

WAC 246-224-0060 Are there other requirements besides registration? All registrants must:

(1) Follow applicable standards according to chapter 246-225 WAC, Radiation protection—X-rays in the healing arts; chapter 246-227 WAC, Radiation protection—Industrial X ray; chapter 246-228 WAC, Radiation protection—Analytical X-ray equipment; and chapter 246-229 WAC, Radiation protection—Particle accelerators;

(2) Meet general radiation protection rules and standards according to chapter 246-220 WAC, Radiation protection—General provisions; chapter 246-221 WAC, Radiation protection standards; chapter 246-222 WAC, Radiation protection—Worker rights; and

(3) Pay applicable fees for radiation machine use according to WAC 246-254-053, Radiation machine facility registration fees.

[Statutory Authority: RCW 70.98.050 and [70.98.]080. 02-14-050, § 246-224-0060, filed 6/27/02, effective 7/28/02.]

WAC 246-224-0070 When and how do I report changes to my registration? (1) You must notify DOL within thirty days of any change to your registration information.

(2) Submit registration changes to:

Department of Licensing
Master License Service
P.O. Box 49034
Olympia, WA 98504-9034
360-664-1400 or fax 360-570-7875

Note: For office of radiation protection information, visit the following web site: http://www.doh.wa.gov/ehp/rp/Default.htm. For department of licensing information, visit the following web site: http://www.dol.wa.gov/business/xray.htm.

[Statutory Authority: RCW 19.02.050, 43.20B.020, 43.70.110, 70.98.050, and 70.98.080. 08-09-079, § 246-224-0070, filed 4/16/08, effective 5/17/08. Statutory Authority: RCW 70.98.050 and [70.98.]080. 02-14-050, § 246-224-0070, filed 6/27/02, effective 7/28/02.]

WAC 246-224-0080 When and how do I renew my registration? (1) You will receive registration renewal notices from DOL.

(2) You must submit renewal information and the applicable fees to DOL as specified by MLS.

(3) If you do not receive a renewal notice, contact DOL.

[Statutory Authority: RCW 19.02.050, 43.20B.020, 43.70.110, 70.98.050, and 70.98.080. 08-09-079, § 246-224-0080, filed 4/16/08, effective 5/17/08. Statutory Authority: RCW 70.98.050 and [70.98.]080. 02-14-050, § 246-224-0080, filed 6/27/02, effective 7/28/02.]

WAC 246-224-0090 What are my obligations if I close my facility or get rid of a machine? (1) You must notify the department or DOL of the machine status within thirty days of closure or removal.

(2) If the machine is disposed of or transferred within Washington state, you must provide the department the following:

(a) The name and contact information of the recipient;

(b) The address of the recipient; and

(c) The date of the disposal or transfer.

(3) If the machine is to be placed in storage and retained, contact the department for approval.

[Statutory Authority: RCW 19.02.050, 43.20B.020, 43.70.110, 70.98.050, and 70.98.080. 08-09-079, § 246-224-0090, filed 4/16/08, effective 5/17/08. Statutory Authority: RCW 70.98.050 and [70.98.]080. 02-14-050, § 246-224-0090, filed 6/27/02, effective 7/28/02.]

WAC 246-224-0100 What are the responsibilities of the X-ray agent? (1) Within fifteen calendar days, any agent who sells, leases, transfers, lends, disposes of, assembles, repairs, replaces, or installs radiation machines or components in Washington state must notify the department of the:

(a) Recipient's name and facility address;

(b) Manufacturer, model, and serial number of each radiation machine master control; and

(c) Date of transfer of the radiation machine.

Note: An FDA form 2579 or equivalent may be used for this notification requirement.

(2) Any agent who installs X-ray systems, controls, or components must ensure that machines, accessories, or components (including exposure switch placement) meet the applicable requirements of chapter 246-225 WAC, Radiation protection—X rays in the healing arts; chapter 246-227 WAC, Radiation protection—Industrial X ray; chapter 246-228 WAC, Radiation protection—Analytical X-ray equipment; and chapter 246-229 WAC, Radiation protection—Particle accelerators.

(3) Agents shall not install or transfer a radiation machine if the registrant does not complete:

(a) A required plan review according to chapter 246-225 WAC, Radiation protection—X rays in the healing arts or chapter 246-227 WAC, Radiation protection—Industrial radiography; or

(b) Shielding and/or required design construction.

(4) Agents must assemble certified X-ray systems according to 21 CFR, subchapter J so that manufacturer's specifications and intended performance designs are met.

[Statutory Authority: RCW 70.98.050 and [70.98.]080. 02-14-050, § 246-224-0100, filed 6/27/02, effective 7/28/02.]

WAC 246-224-0110 What if I want to bring a radiation machine into Washington state for temporary use from out-of-state? (1) Notify the department at least three business days prior to in-state use when bringing an X-ray machine into the state for any temporary use. The department may waive the time requirement upon hardship request by the owner. Notification to the department includes, at a minimum, the:

(a) Type of radiation machine;

(b) Nature, duration, and scope of use; and

(c) Exact location where the radiation machine is to be used.

(2) All machines and assemblies must comply with all applicable regulations.

(3) Any medical or dental use radiation (e.g., X-ray) machines within the state must register with the department according to WAC 246-224-0020.

(4) For radiation (e.g., X-ray) machines not intended for patient diagnosis and treatment, you must register the machine if it is used for more than sixty calendar days. Registration is waived for sixty or fewer calendar days per year.

[Statutory Authority: RCW 70.98.050 and [70.98.]080. 02-14-050, § 246-224-0110, filed 6/27/02, effective 7/28/02.]

WAC 246-224-0120 What happens if I do not register my radiation machine? You must pay a late fee plus registration fees due for the period of time the machine has been in operation and not registered according to WAC 246-254-053, Radiation machine facility registration fees.

[Statutory Authority: RCW 70.98.050 and [70.98.]080. 02-14-050, § 246-224-0120, filed 6/27/02, effective 7/28/02.]

Chapter 246-225 WAC

RADIATION PROTECTION—X RAYS IN THE HEALING ARTS

WAC

246-225-001	Purpose and scope.
246-225-010	Definitions.
246-225-020	General requirements—Administrative controls.
246-225-030	General requirements—Plan review.
246-225-040	General requirements for diagnostic X-ray systems.
246-225-050	Fluoroscopic X-ray systems.
246-225-060	Radiographic systems other than fluoroscopic, dental intraoral, or veterinary systems—Beam limitation.
246-225-070	Radiographic systems other than fluoroscopic, dental intraoral, or veterinary systems—Radiation exposure control devices.
246-225-080	Radiographic systems other than fluoroscopic, dental intraoral, or veterinary systems—Source-to-skin or receptor distance.
246-225-090	Radiographic systems other than fluoroscopic and dental intraoral—Exposure reproducibility.
246-225-100	Radiographic systems—Standby radiation from capacitor energy storage equipment.
246-225-120	Therapeutic X-ray installations less than 1 MeV.
246-225-130	X-ray and electron therapy systems with energies of one MeV and above.
246-225-140	Veterinary medicine radiographic installations.
246-225-150	X-ray film developing requirements.
246-225-160	Mammography.
246-225-99920	Appendix II—Determination of competency.
246-225-99930	Appendix III—Information to be submitted by persons proposing to conduct healing arts screening using ionizing radiation.

DISPOSITION OF SECTIONS FORMERLY CODIFIED IN THIS CHAPTER

246-225-110 Intraoral dental radiographic systems. [Statutory Authority: RCW 70.98.050 and 70.98.080. 91-15-083 (Order 183), § 246-225-110, filed 7/23/91, effective 8/23/91. Statutory Authority: RCW 43.70.040. 91-02-049 (Order 121), recodified as § 246-225-110, filed 12/27/90, effective 1/31/91. Statutory Authority: RCW 70.98.080. 83-19-050 (Order 2026), § 402-28-080, filed

9/16/83. Statutory Authority: RCW 70.98.050. 81-01-011 (Order 1570), § 402-28-080, filed 12/8/80; Order 1084, § 402-28-080, filed 1/14/76; Order 1, § 402-28-080, filed 1/8/69; Rules (part), filed 10/26/66.] Repealed by 08-14-074, filed 6/26/08, effective 7/27/08. Statutory Authority: RCW 70.98.050 and 70.98.080.

246-225-99910 Appendix I—Good practices. [Statutory Authority: RCW 70.98.050. 94-01-073, § 246-225-99910, filed 12/9/93, effective 1/9/94. Statutory Authority: RCW 70.98.050 and 70.98.080. 91-15-083 (Order 183), § 246-225-99910, filed 7/23/91, effective 8/23/91. Statutory Authority: RCW 43.70.040. 91-02-049 (Order 121), recodified as § 246-225-99910, filed 12/27/90, effective 1/31/91. Statutory Authority: RCW 70.98.080. 83-19-050 (Order 2026), § 402-28-99001, filed 9/16/83; Order 1084, Appendix D (codified as WAC 402-28-99001), filed 1/14/76.] Repealed by 97-20-101, filed 9/29/97, effective 10/30/97. Statutory Authority: RCW 43.70.040.

WAC 246-225-001 Purpose and scope. This chapter establishes requirements, for which a registrant is responsible, for use of X-ray equipment by or under the supervision of an individual authorized by and licensed in accordance with state statutes to engage in the healing arts. The provisions of this chapter are in addition to, and not in substitution for, other applicable provisions of these regulations.

[Statutory Authority: RCW 43.70.040. 91-02-049 (Order 121), recodified as § 246-225-001, filed 12/27/90, effective 1/31/91. Statutory Authority: RCW 70.98.050. 81-01-011 (Order 1570), § 402-28-010, filed 12/8/80; Order 1084, § 402-28-010, filed 1/14/76; Order 1, § 402-28-101 (codified as WAC 402-28-010), filed 1/8/69; Rules (part), filed 10/26/66.]

WAC 246-225-010 Definitions. As used in this chapter, the following definitions apply:

(1) "Accessible surface" means the external surface of the enclosure or housing provided by the manufacturer.

(2) "Accidental radiation exposure incident" means an exposure to a patient, an operator, or a member of the public that was unintentional.

(3) "Added filter" means the filter added to the inherent filtration.

(4) "Aluminum equivalent" means the thickness of aluminum (type 1100 alloy) affording the same attenuation, under specified conditions, as the material in question. (The nominal chemical composition of type 1100 aluminum alloy is 99.00 percent minimum aluminum, 0.12 percent copper.)

(5) "Assembler" means any person engaged in the business of assembling, replacing, or installing one or more components into an X-ray system or subsystem. An assembler may be the practitioner, his/her employee, an outside contractor, or an employee of an outside firm.

(6) "Attenuation block" means a block or stack, having dimensions 20 cm by 20 cm by 3.8 cm, of type 1100 aluminum alloy or other aluminum alloys having equivalent attenuation.

(7) "Automatic exposure control" means a device which automatically controls one or more technique factors in order to obtain at a preselected location(s) a required quantity of radiation (see also "phototimer").

(8) "Barrier" (see "protective barrier").

(9) "Beam axis" means a line from the source through the centers of the X-ray fields.

(10) "Beam-limiting device" means a device which provides a means to restrict the dimensions of the X-ray field.

(11) "Beam monitoring system" means a system designed to detect and measure the radiation present in the useful beam.

(12) "C-arm X-ray system" means an X-ray system in which the image receptor and X-ray tube housing assembly are connected by a common mechanical support system in order to maintain a desired spatial relationship. This system is designed to allow a change in the projection of the beam through the patient without a change in the position of the patient.

(13) "Cephalometric device" means a device intended for the radiographic visualization and measurement of the dimensions of the human head.

(14) "Certified components" means components of X-ray systems which have been certified by the manufacturer as meeting the requirements of the federal performance standard for X-ray equipment.

(15) "Certified system" means any X-ray system which has one or more certified component(s).

(16) "Changeable filters" means any filter, exclusive of inherent filtration, which can be removed from the useful beam through any electronic, mechanical or physical process.

(17) "Coefficient of variation (C)" means the ratio of the standard deviation to the mean value of a population of observations. It is estimated using the following equation:

$$C = \frac{s}{\bar{X}} = \frac{1}{\bar{X}} \left[\sum_{i=1}^{n} \frac{(X_i - \bar{X})^2}{n-1} \right]^{1/2}$$

where

s = Estimated standard deviation of the population.

X = Mean value of observations in sample.

X(i) = i^{th} observation sampled.

n = Number of observations in sample.

(18) "Contact therapy system" means an X-ray system wherein the X-ray tube port is put in contact with or within 5 centimeters of, the surface being treated.

(19) "Control panel" means that part of the X-ray control upon which are mounted the switches, knobs, pushbuttons, and other hardware necessary for manually setting the technique factors.

(20) "Cooling curve" means the graphical relationship between heat units stored and cooling time.

(21) "Date of transfer." See installation date.

(22) "Dead-man switch" means a switch so constructed that a circuit closing contact can be maintained only by continuous pressure on the switch by the operator.

(23) "Department" means the department of health which has been designated as the state radiation control agency.

(24) "Detector" (see "radiation detector").

(25) "Diagnostic source assembly" means the tube housing assembly with a beam-limiting device attached.

(26) "Diagnostic X-ray system" means an X-ray system designed for irradiation of any part of the human or animal body for the purpose of recording or visualization for diagnostic purposes.

(27) "Direct scattered radiation" means that scattered radiation which has been deviated in direction only by materials irradiated by the useful beam (see also "scattered radiation").

(28) "Electronic product defect" means an error in design, manufacture, or performance of an X-ray system such that unintentional radiation exposure to a patient, an operator, or a member of the public has occurred.

(29) "Entrance exposure rate" means the exposure measured free-in-air per unit time where the useful beam enters the patient.

(30) "Equipment" (see "X-ray equipment").

(31)*"Exposure" means the quotient of dQ divided by dm where dQ is the absolute value of the total charge of the ions of one sign produced in air when all the electrons (negatrons and positrons) liberated by photons in a volume element of air having mass dm are completely stopped in air. (The special unit of exposure is the roentgen.)

Note: *When the word, exposure, is used in this part to mean one or more irradiations of a person for a healing arts purpose, or in a more general sense, it will not be underlined.

(32) "Field emission equipment" means equipment which uses an X-ray tube in which electron emission from the cathode is due solely to the action of an electric field.

(33) "Filter" means material placed in the useful beam to absorb preferentially selected radiations.

(34) "Fluoroscopic imaging assembly" means a component which comprises a reception system in which X-ray photons produce a fluoroscopic image. It includes equipment housings, electrical interlocks if any, the primary protective barrier, and structural material providing linkage between the image receptor and the diagnostic source assembly.

(35) "Focal spot" means the area on the anode of the X-ray tube bombarded by the electrons accelerated from the cathode, and from which the useful beam originates.

(36) "Full beam detector" means a radiation detector of such size that the total cross section of the maximum size useful beam is intercepted.

(37) "General purpose radiographic X-ray system" means any radiographic X-ray system which, by design, is not limited to radiographic examination of specific anatomical regions.

(38) "Gonad shield" means a protective barrier for the testes or ovaries.

(39) "Half-value layer (HVL)" means the thickness of specified material which attenuates the beam of radiation to an extent such that the exposure rate is reduced to one-half of its original value. In this definition the contribution of all scattered radiation, other than any which might be present initially in the beam concerned, is deemed to be excluded.

(40) "Healing arts screening" means the testing of an asymptomatic population using X-ray machines for the detection or evaluation of health indications when such tests are not specifically and individually ordered by a licensed practitioner of the healing arts legally authorized to prescribe such X-ray tests for the purpose of diagnosis or treatment.

(41) "Heat unit" means a unit of energy equal to the product of the peak kilovoltage, miliamperes, and seconds, i.e., kVp x mA x second.

(42) "Image intensifier" means a device consisting of an image intensifier tube installed in its housing which instantaneously converts an X-ray pattern into a light image of higher energy density.

(43) "Image receptor" means any device, such as a fluorescent screen or radiographic film, which transforms incident X-ray photons either into a visible image or into another form which can be made into a visible image by further transformations.

(44) "Image receptor support" means that part of a mammographic system designed to support the image receptor in a plane perpendicular to the X-ray beam during mammography.

(45) "Inherent filtration" means the filtration of the useful beam provided by the permanently installed components of the tube housing assembly.

(46) "Installation date" means the earliest date that a machine, accessory, or component is able to be used by a registrant or transferee but no later than the date of the first human exposure made using the machine, accessory, or component that has been installed.

(47) "Interlock" means a device arranged or connected such that the occurrence of an event or condition is required before a second event or condition can occur or continue to occur.

(48) "Irradiation" means the exposure of matter to ionizing radiation.

(49) "Kilovolts peak (kVp)" (see "peak tube potential").

(50) "kV" means kilovolts.

(51) "kWs" means kilowatt second which is equal to the product of peak kilovolts, amperes, and seconds or 10^{-3} X kV X mA X sec.

(52) "Lead equivalent" means the thickness of lead affording the same attenuation, under specified conditions, as the material in question.

(53) "Leakage radiation" means radiation emanating from the diagnostic or therapeutic source assembly except for:

(a) The useful beam and

(b) Radiation produced when the exposure switch or timer is not activated.

(54) "Leakage technique factors" means the technique factors associated with the tube housing assembly which are used in measuring leakage radiation. They are defined as follows:

(a) For capacitor energy storage equipment, the maximum rated peak tube potential and the maximum rated number of exposures in an hour for operation at the maximum rated peak tube potential with the quantity of charge per exposure being 10 milliampere seconds, or the minimum obtainable from the unit, whichever is larger.

(b) For field emission equipment rated for pulsed operation, the maximum rated peak tube potential and the maximum rated number of X-ray pulses in an hour for operation at the maximum rated peak tube potential.

(c) For all other equipment, the maximum rated peak tube potential and the maximum rated continuous tube current for the maximum rated peak tube potential.

(55) "Light field" means that area of the intersection of the light beam from the beam-limiting device and one of the set of planes parallel to and including the plane of the image

receptor, whose perimeter is the locus of points at which the illumination is one-fourth of the maximum in the intersection.

(56) "Line-voltage regulation" means the difference between the no-load and the load line potentials expressed as a percent of the load line potential; that is,

$$\text{Percent line-voltage regulation} = 100\,(V_n - V_1)/V_1$$

where:

$V_{(n)}$ = No-load line potential

$V_{(1)}$ = Load line potential

(57) "mA" means tube current in milliamperes.

(58) "mAs" means milliampere second or the product of the tube current in milliamperes and the time of exposure in seconds.

(59) "Maximum line current" means the root mean squared current in the supply line of an X-ray machine operating at its maximum rating.

(60) "Mobile equipment" (see "X-ray equipment").

(61) "Modified installation" means a room, building, office, or facility in which structural parameters which affect radiation safety are being changed; these parameters include such things as reconstruction or moving of walls, replacement of the X-ray machine with one of higher kVp or mA, a change in the direction of the beam, replacement of the control panel so that operator protection is adversely affected, a change in occupancy of adjacent areas, workload changes, etc.

(62) "New installation" means a room, building, office, or facility newly built, or in which previously there has been no radiation machine.

(63) "Peak tube potential" means the maximum value of the potential difference across the X-ray tube during an exposure.

(64) "Phantom" means a volume of material similar to tissue with respect to attenuation and scattering of X-ray photons. This requires that the atomic number (Z) and the density of the material be similar to those of tissue.

(65) "Phototimer" - means a device which controls radiation exposure to the image receptor by detecting the total amount of radiation reaching the device. The radiation monitoring device(s) is part of an electronic circuit which controls the time the tube is activated (see also "automatic exposure control").

(66) "Portable equipment" (see "X-ray equipment").

(67) "Position indicating device (PID)" means a device, on dental X-ray equipment which indicate the beam position and establishes a definite source-surface (skin) distance. The device may or may not incorporate or serve as a beam-limiting device.

(68) "Positive beam limitation" means the automatic or semi-automatic adjustment of an X-ray beam to the selected image receptor size, whereby exposures cannot be made without such adjustment.

(69) "Primary protective barrier" (see "protective barrier").

(70) "Protected area" means a shielded area in which attenuation of x-radiation is sufficient to meet the exposure limits of WAC 246-221-010 and the principles of WAC 246-220-007 and "ALARA" for individuals in that area.

(71) "Protective apron" means an apron made of radiation absorbing materials, used to reduce radiation exposure.

(72) "Protective barrier" means a barrier of radiation absorbing material(s) used to reduce radiation exposure.

(a) "Primary protective barrier" means the material, excluding filters, placed in the useful beam, to protect anyone other than the patient from radiation exposure.

(b) "Secondary protective barrier" means a barrier sufficient to attenuate the stray radiation to the required degree.

(73) "Protective glove" means a glove made of radiation absorbing materials used to reduce radiation exposure.

(74) "Quality assurance" is a program designed to produce high quality radiographs at minimal cost and minimal patient exposure.

(75) "Quality control" is the routine measurement of the performance of the diagnostic X-ray imaging system, from X-ray beam output to the viewing of radiographs, and the continual adjustment of that performance to an optimal and consistent level.

(76) "Radiation detector" means a device which in the presence of radiation provides by either direct or indirect means, a signal or other information suitable for use in measuring one or more quantities of incident radiation.

(77) "Radiation safety" means efforts directed at occupational exposure reduction, patient exposure reduction, image quality improvement, diagnostic imaging system quality assurance, radiation measurements, dose evaluations, compliance with state and federal regulations, and related issues.

(78) "Radiation therapy simulation system" means a fluoroscopic or radiographic X-ray system intended for localizing the volume to be exposed during radiation therapy and confirming the position and size of the therapeutic irradiation field.

(79) "Radiograph" means an image receptor on which the image is created directly or indirectly by an X-ray pattern and results in a permanent record.

(80) "Radiographic imaging system" means any system whereby a permanent or temporary image is recorded on an image receptor by the action of ionizing radiation.

(81) "Rating" means the operating limits of an X-ray system or subsystem as specified by the component manufacturer.

(82) "Recording" means producing a permanent form of an image resulting from X-ray photons (e.g., film, video tape).

(83) "Response time" means the time required for an instrument system to reach 90 percent of its final reading when the radiation-sensitive volume of the instrument system is exposed to a step change in radiation flux from zero sufficient to provide a steady state midscale reading.

(84) "Scattered radiation" means radiation that, during passage through matter, has been deviated in direction (see also "direct scattered radiation").

(85) "Secondary protective barrier" (see "protective barrier").

(86) "Shutter" means a device attached to the tube housing assembly which can totally intercept the entire cross sectional area of the useful beam and which has a lead equivalency at least that of the tube housing assembly.

(87) "SID" (see "source-image receptor distance").

(88) "Source" means the focal spot of the X-ray tube.

(89) "Source-image receptor distance (SID)" means the distance from the source to the center of the input surface of the image receptor.

(90) "Source-to-skin-distance (SSD)" means the distance between the source and the skin entrance plane of the patient.

(91) "Special purpose X-ray equipment" means that which is designed for radiographic examination of one specific area of the body.

(92) "Spot check" means an abbreviated calibration procedure which is performed to assure that a previous calibration continues to be valid.

(93) "Spot film device" means a device intended to transport and/or position a radiographic image receptor between the X-ray source and fluoroscopic image receptor, including a device intended to hold a cassette over the input end of an image intensifier for the purpose of making a radiograph.

(94) "Spot film" means a radiograph which is made during a fluoroscopic examination to record permanently conditions which exist during that fluoroscopic procedure.

(95) "Stationary equipment" (see "X-ray equipment").

(96) "Stray radiation" means the sum of leakage and scattered radiation.

(97) "Technique factors" means the conditions of operation. They are specified as follows:

(a) For capacitor energy storage equipment, peak tube potential in kV and quantity of charge in mAs.

(b) For field emission equipment rated for pulsed operation, peak tube potential in kV and number of X-ray pulses.

(c) For all other equipment, peak tube potential in kV and:

(i) Either tube current in mA and exposure time in seconds,

(ii) Or the product of tube current and exposure time in mAs.

(98) "Transmission detector" means a radiation detector through which the useful beam or part of the useful beam passes.

(99) "Treatment volume" means the region, in the patient, to which a specified dose is to be delivered.

(100) "Tube" means an X-ray tube, unless otherwise specified.

(101) "Tube housing assembly" means the tube housing with tube installed. It includes high-voltage and/or filament transformers and other appropriate elements when they are contained within the tube housing.

(102) "Tube rating chart" means the set of curves which specify the rated limits of operation of the tube in terms of the technique factors.

(103) "Useful beam" means the radiation which passes through the tube housing port and the aperture of the beam-limiting device when the exposure switch or timer is activated.

(104) "Variable-aperture beam-limiting device" means a beam-limiting device which has capacity for stepless adjustment of the X-ray field size.

(105) "Visible area" means that portion of the input surface of the image receptor over which incident X-ray photons produce a visible image.

(106) "Wedge filter" means an added filter with changing radio-opacities used to achieve more uniform optical densities on the image receptor when a body part of varying absorption characteristics is radiographed.

(107) "X-ray control" means a device which controls input power to the X-ray high-voltage generator and/or the X-ray tube. It includes equipment which controls the technique factors of an X-ray exposure.

(108) "X-ray equipment" means an X-ray system, subsystem, or component thereof. Types of X-ray equipment are as follows:

(a) 'Mobile' means X-ray equipment mounted on a permanent base with wheels and/or casters for moving while completely assembled.

(b) 'Portable' means X-ray equipment designed to be hand-carried.

(c) 'Stationary' means X-ray equipment which is installed in a fixed location.

(109) "X-ray field" means that area of the intersection of the useful beam and any one of the set of planes parallel to and including the plane of the image receptor, whose perimeter is the locus of points at which the exposure rate is one-fourth of the maximum in the intersection.

(110) "X-ray high-voltage generator" means a device which transforms electrical energy from the potential supplied by the X-ray control to the tube operating potential. The device may also include means for transforming alternating current to direct current, filament transformers for the X-ray tube(s), high-voltage switches, electrical protective devices, and other appropriate elements.

(111) "X-ray system" means an assemblage of components for the controlled production of x-rays. It includes minimally an X-ray high-voltage generator, an X-ray control, a tube housing assembly, a beam-limiting device, and the necessary supporting structures. Additional components which function with the system are considered integral parts of the system.

(112) "X-ray subsystem" means any combination of two or more components of an X-ray system for which there are requirements specified in this part.

(113) "X-ray tube" means any electron tube which is designed to be used primarily for the production of X rays.

[Statutory Authority: RCW 70.98.050 and 70.98.080. 91-15-083 (Order 183), § 246-225-010, filed 7/23/91, effective 8/23/91. Statutory Authority: RCW 43.70.040. 91-02-049 (Order 121), recodified as § 246-225-010, filed 12/27/90, effective 1/31/91. Statutory Authority: RCW 70.98.080. 83-19-050 (Order 2026), § 402-28-020, filed 9/16/83. Statutory Authority: RCW 70.98.050. 81-01-011 (Order 1570), § 402-28-020, filed 12/8/80; Order 1084, § 402-28-020, filed 1/14/76; Order 1, § 402-28-020, filed 1/8/69; Rules (part), filed 10/26/66.]

WAC 246-225-020 General requirements—Administrative controls. (1) No person shall make, sell, lease, transfer, lend, or install X-ray equipment or the accessories used in connection with such equipment unless such accessories and equipment, when properly placed in operation and properly used, shall meet the requirements of this chapter.

(2) The registrant in control of the X-ray machines shall be responsible for directing the operation of the X-ray machines. The registrant or registrant's agent shall assure the following provisions are met in the operation of the X-ray machine or machines:

(a) The registrant shall not operate an X-ray machine for diagnostic or therapeutic purposes when the X-ray machine:

(i) Does not meet the provisions of this chapter; or

(ii) Is malfunctioning and threatens the health or safety of the patient, operator, or general public.

(b) X-ray machine operator requirements.

(i) Individuals operating the X-ray equipment shall be adequately instructed in safe operating procedures and shall be able to demonstrate competence, upon request from the department, in the correct use of the equipment. Required areas of competence are listed in Appendix II. The department may determine compliance with subsection (2)(b) of this section by observation, interview, or testing;

(ii) A medical X-ray machine operator shall be licensed, certified or registered by the department as either:

(A) A health care practitioner, licensed under Title 18 RCW; or

(B) A diagnostic or therapeutic radiologic technologist certified in accordance with chapter 18.84 RCW; or

(C) An X-ray technician registered in accordance with chapter 18.84 RCW.

(c) At each X-ray system's control panel, a chart shall be provided which specifies for the examinations performed by that system the following information:

(i) Patient's anatomical size versus technique factors utilized;

(ii) Source to image receptor distance used;

(iii) Type and placement of patient shielding used, for example, gonad, thyroid, lap apron;

(iv) If applicable, settings for automatic exposure devices; and

(v) Type and size of film or screen-film combination to be used.

(d) When required by the department, a registrant shall create and provide to operators of the X-ray system, radiation safety procedures which address patient and occupationally exposed personnel safety. These procedures shall define restrictions of the operating technique required for safe operation of the particular X-ray system;

(e) Except for patients who cannot be moved out of the room and the patient being examined, only the staff and ancillary personnel required for the medical procedure or training shall be present in the room during the radiographic exposure. Other than the patient being examined:

(i) All individuals shall be positioned such that no part of the body including the extremities not protected by 0.5 mm lead equivalent will be struck by the useful beam;

(ii) The X-ray operator, other staff and ancillary personnel shall be protected from the direct scatter radiation by protective aprons or whole body protective barriers of not less than 0.25 mm lead equivalent;

(iii) Patients who cannot be removed from the room shall be:

(A) Protected from the direct scatter radiation by whole body protective barriers of not less than 0.25 mm lead equivalent; or

(B) Positioned so the nearest portion of the body is at least 2 meters from both the tube head and the nearest edge of the image receptor.

(iv) The department may require additional protective devices when a portion of the body of staff or ancillary personnel is potentially subjected to stray radiation which may result in that individual receiving one quarter of the maximum permissible dose defined under WAC 246-221-010.

(f) Gonad shielding of not less than 0.5 mm lead equivalent shall be used for patients of reproductive age during radiographic procedures in which the gonads are in the direct (useful) beam, except for cases when gonad shielding may interfere with the diagnostic procedure;

(g) Persons shall not be exposed to the useful beam except for healing arts purposes. Only a licensed practitioner of the healing arts shall authorize an exposure to the useful beam. This requirement prohibits deliberate exposure for the following purposes:

(i) Exposure of an individual for training, demonstration, or other purposes unless there are also healing arts requirements and proper prescription is provided;

(ii) Except for mammography performed by registered facilities on self-referred patients, the exposure of an individual for the purpose of healing arts screening without prior written approval of the state health officer; and

(iii) Exposure of an individual for the sole purpose of satisfying a third party's prerequisite for reimbursement under any health care plan, except for exposure required under medicare provisions.

(h) When a patient or film must be provided with auxiliary support during a radiation exposure:

(i) Mechanical holding devices shall be used when the technique permits. The safety rules, when required under subdivision (d) of this subsection, shall list individual projections where holding devices cannot be utilized;

(ii) Written safety procedures, when required under subdivision (d) of this subsection, shall indicate the requirements for selecting a human holder and the procedure the holder shall follow;

(iii) The human holder shall be protected as required under subdivision (e)(i) of this subsection;

(iv) No person shall be used routinely to hold film or patients;

(v) When the patient must hold the film, the portion of the body other than the area of clinical interest struck by the useful beam shall be protected by not less than 0.5 mm lead equivalent material;

(vi) Holding the film or the patient shall be permitted only in very unusual and rare situations.

(i) Personnel dosimetry. All persons associated with the operation of an X-ray system are subject to both the occupational exposure limits and the requirements for the determination of the doses stated under WAC 246-221-020. In addition, when protective clothing or devices are worn on portions of the body and a dosimeter is required, at least one such dosimeter shall be utilized as follows:

(i) When an apron is worn, the monitoring device shall be worn at the collar outside of the apron; and

(ii) The dose to the whole body based on the maximum dose attributed to the most critical organ shall be recorded on the reports required under WAC 246-221-230. If more than one device is used or a record is made of the data, each dose shall be identified with the area where the device was worn on the body.

(iii) Personnel monitoring of an operator shall be required where:

(A) Exposure switch cords are utilized that allow the operator to stand in an unprotected area during exposures; and

(B) Measurements by the department show ten percent of the exposure limits as specified under WAC 246-221-010 may be exceeded.

(iv) All persons involved in the operation of a fluoroscope and working within the fluoroscopy room during its operation shall wear a personnel dosimeter required under WAC 246-221-090 and subsection (2)(i)(i) of this section. If extremities are in or near the primary beam, extremity dosimeters are also required;

(j) Healing arts screening utilizing radiation. Any person proposing to conduct a healing arts screening program, with the exception of a mammography program, shall not initiate such a program without prior approval of the state health officer. When requesting such approval, that person shall submit the information outlined under Appendix III of this part. If information submitted becomes invalid or outdated, the state health officer shall be notified immediately;

(k) When using scatter suppressing grids, the grids shall be:

(i) Clearly labelled with the focal distance for which they are designed to be used; and

(ii) Of the proper focal distance for the source-to-image distances used.

(l) Procedures and auxiliary equipment designed to minimize patient and personnel exposure commensurate with the needed diagnostic information shall be utilized.

(i) Film cassettes without intensifying screens shall not be used for any routine diagnostic radiological imaging.

(ii) Portable or mobile X-ray equipment shall be used only for examinations where it is impractical to transfer the patient(s) to a stationary X-ray installation.

(m) Patient log. A medical X-ray facility (chiropractors, allopathic and osteopathic physicians and hospitals only) shall record for each X-ray diagnosis or treatment the patient's name, type of X-ray procedures performed, and the date. A separate log is not necessary if the required information is retrievable by reference to other records.

[Statutory Authority: RCW 70.98.050. 94-06-017, § 246-225-020, filed 2/22/94, effective 3/25/94. Statutory Authority: RCW 70.98.050 and 70.98.080. 91-15-083 (Order 183), § 246-225-020, filed 7/23/91, effective 8/23/91. Statutory Authority: RCW 43.70.040. 91-02-049 (Order 121), recodified as § 246-225-020, filed 12/27/90, effective 1/31/91. Statutory Authority: RCW 70.98.080. 87-01-031 (Order 2450), § 402-28-031, filed 12/11/86; 83-19-050 (Order 2026), § 402-28-031, filed 9/16/83. Statutory Authority: RCW 70.98.050. 81-01-011 (Order 1570), § 402-28-031, filed 12/8/80; Order 1084, § 402-28-031, filed 1/14/76. Formerly WAC 402-28-030 (part).]

WAC 246-225-030 General requirements—Plan review. (1) Before construction, the floor plans and equipment arrangement of medical installations (new or modifications of existing installations) utilizing X rays for diagnostic or therapeutic purposes shall be submitted to:

(a) A qualified expert for determination of shielding requirements using National Council on Radiation Protection and Measurements Report No. 49, or equivalent; and

(b) The department for subsequent review.

Review shall not imply approval.

(2) The review of such plans shall not preclude the requirement of additional modifications should a subsequent analysis of operating conditions indicate the possibility of an individual receiving a dose in excess of the limits required under WAC 246-221-010, 246-221-050, and 246-221-060.

(3) Diagnostic veterinary, podiatric, and dental facilities shall be exempt from submitting shielding calculations and floor plans.

(4) In order for the department to provide an evaluation, technical advice, and official review of the shielding requirements for a medical radiation installation, a floor plan drawn to scale and the following data are required:

(a) The normal location of the X-ray tube, along with an indication of anode-cathode orientation to the cassette holders;

(b) The limits of the tube travel;

(c) The directions in which the tube is pointed;

(d) Window locations;

(e) The location of the control booth or operator's position;

(f) The exposure switch location;

(g) The position of the viewing window, if any;

(h) The composition and thickness of the walls;

(i) If more than one story, the height floor-to-floor;

(j) If more than one story, the composition and thickness of materials in the ceiling or floor;

(k) The make and model of the X-ray machine;

(l) The maximum kVp and mA;

(m) The types of examinations or treatments (for example, chest, spine, general X-ray, or therapy);

(n) The identification and occupancy of areas adjacent to the X-ray room;

(o) The anticipated X-ray workload expressed in number of patients and exposures per week including:

(i) Technique factors used, or milliampere-seconds or milliampere-minutes per week; and

(ii) Estimates of the percentage of the workload expected to occur for a particular beam direction.

(5) For new and modified installations only, the following are minimum design requirements for medical X-ray machine operator booths. These requirements do not apply to dental, podiatry, and veterinary installations. See subsections (6) and (7) of this section for dental panoramic and cephalometric requirements.

(a) The operator shall be allotted 0.7 sq. meters (7.5 sq. ft.) or more of unobstructed floor space in the X-ray booths.

(i) The 0.7 sq. meters (7.5 sq. ft.) of minimum space specified under subsection (5)(a) of this section shall be a geometric configuration where no dimension is less than 61.0 centimeters (2.0 ft.).

(ii) The allotted space shall exclude an encumbrance by the console, such as an overhang, cables, or other similar encroachment.

(iii) An extension of a straight line drawn between any point on the edge of the booth shielding and the nearest vertical edge of a vertical cassette holder, corner of the examination table, or any part of the tube housing assembly shall not impinge on the unobstructed space.

(iv) The booth walls shall be 2.1 meters (7.0 ft.) or more and shall be permanently fixed to the floor or other structure as may be necessary.

(v) When a door or moveable panel is used as the integral part of the booth structure, it must have a permissive device which will prevent an exposure when the door or panel is not closed.

(b) Switch placement. The operator's switch for the radiographic machine shall be fixed within the booth. The switch shall:

(i) Be at least 102 centimeters (forty inches) inside the protected area; and

(ii) Allow the operator to use the available viewing windows.

(c) Viewing system requirements.

(i) Each booth shall have at least one viewing device which shall:

(A) Be placed so the operator can view the patient during exposure; and

(B) Be placed so the operator can have full view of the entries into the room.

(ii) When the viewing system is a window, the following requirements also apply:

(A) The window shall have a visible area of 930 square centimeters (1.0 square foot) or more; and

(B) The glass shall have the same lead equivalence or more as that required in the booth's wall where the glass is mounted.

(iii) When the viewing system is by mirrors, the mirrors shall be located to accomplish the general requirements under subdivision (i) of this subsection.

(iv) When the viewing system is by electronic means (for example, TV):

(A) The camera shall be located to accomplish the general requirements under subdivision (i) of this subsection; and

(B) There shall be an alternate viewing system as a backup for electronic failure.

(d) New or modified facilities shall maintain a copy of the floor plan and shielding calculations required under subsection (1) of this section.

(6) Dimensions of primary beam shielding shall exceed the largest possible beam size by 30.5 centimeters (one foot) or more in every direction. Cephalometric primary beam shielding shall be deemed adequate if, for a maximum workload of twenty films a week, two-pound lead is installed (for occupied areas).

(7) A viewing device shall be present in dental panoramic and cephalometric X-ray installations, so the requirements of subsection (5)(c) of this section are met.

[Statutory Authority: RCW 70.98.050. 94-01-073, § 246-225-030, filed 12/9/93, effective 1/9/94. Statutory Authority: RCW 70.98.050 and 70.98.080. 91-15-083 (Order 183), § 246-225-030, filed 7/23/91, effective 8/23/91. Statutory Authority: RCW 43.70.040. 91-02-049 (Order 121), recodified as § 246-225-030, filed 12/27/90, effective 1/31/91. Statutory Authority: RCW 70.98.080. 87-01-031 (Order 2450), § 402-28-032, filed 12/11/86; 83-19-050 (Order 2026), § 402-28-032, filed 9/16/83; Order 1084, § 402-28-032, filed 1/14/76. Formerly WAC 402-28-030 (part).]

WAC 246-225-040 General requirements for diagnostic x-ray systems. In addition to other requirements of this chapter, diagnostic X-ray systems shall meet the following requirements:

(1) *Warning label.* The control panel containing the main power switch shall bear the warning statement, legible and accessible to view: "WARNING: This X-ray unit may be dangerous to patient and operator unless safe exposure factors and operating instructions are observed."

(2) *Battery charge indicator.* On battery-powered generators, visual means shall be provided on the control panel to indicate the battery is in a state of charge adequate for proper operation.

(3) *Leakage radiation from the diagnostic source assembly.* The leakage radiation from the diagnostic source assembly, measured at a distance of 1 meter in any direction from the source, shall not exceed 2.58 x 10^{-5} coulombs per kilogram (100 milliroentgens) in one hour when the X-ray tube is operated at its leakage technique factors. Compliance shall be determined by measurements averaged over an area of one hundred square centimeters with no linear dimension greater than twenty centimeters.

(4) *Radiation from components other than the diagnostic source assembly.* The radiation emitted by a component other than the diagnostic source assembly shall not exceed 5.16 x 10^{-7} coulombs per kilogram (2 milliroentgens) in one hour at 5 centimeters from an accessible surface of the component when it is operated in an assembled X-ray system under conditions for which it was designed. Compliance shall be determined by measurements averaged over an area of 100 square centimeters with no linear dimension greater than 20 centimeters.

(5) *Beam quality.*

(a) The half-value layer (HVL) of the useful beam for a given X-ray tube potential shall not be less than the values shown in this section, Table I. If it is necessary to determine such half-value layer at an X-ray tube potential which is not listed in Table I, linear interpolation or extrapolation shall be made.

WAC 246-225-040 TABLE 1

Design operating range (kilovolts peak)	Measured potential (kilovolts peak)	Half-value layer (millimeters of aluminum equivalent)	Half-value layer (millimeter of aluminum equivalent for dental units)
Below 51—	30	0.3	N/A
	40	0.4	N/A
	50	0.5	1.5
51 to 70——	51	1.2	1.5
	60	1.3	1.5
	70	1.5	1.5
Above 70—	71	2.1	2.1
	80	2.3	2.3
	90	2.5	2.5
	100	2.7	2.7
	110	3.0	3.0
	120	3.2	3.2
	130	3.5	3.5
	140	3.8	3.8
	150	4.1	4.1

(b) For capacitor energy storage equipment, compliance shall be determined with the system fully charged and a setting of at least 10 mAs for each exposure.

(c) The required minimal half-value layer shall include the filtration contributed by materials permanently in position between the focal spot of the tube and the patient. (For example, a table top when the tube is mounted "under the table" and inherent filtration of the tube.)

(d) Filtration control. For X-ray systems with variable kVp and variable filtration for the useful beam, a device shall link the kVp selector with the filters and shall prevent an exposure unless the minimum amount of filtration required by subdivision (a) of this subsection is in the useful beam for the selected kVp.

(6) *Multiple tubes.* Where two or more radiographic tubes are controlled by one exposure switch, the tube or tubes selected shall be clearly indicated prior to initiation of the exposure. Such indication shall be both on the X-ray control panel and near or on the selected tube housing assembly.

(7) *Mechanical support of tube head.* The tube housing assembly supports shall be adjusted such that the tube housing assembly remains stable during an exposure unless the tube housing movement during exposure is a designed function of the X-ray system.

(8) *Technique indicators.*

(a) The technique factors used during an exposure shall be indicated before the exposure begins, except when automatic exposure controls are used, in which case the technique factors set prior to the exposure shall be indicated.

(b) On equipment having fixed technique factors, the requirement, under subdivision (a) of this subsection may be met by permanent markings. Indication of technique factors shall be visible from the operator's position except in the case of spot films made by the fluoroscopist.

(9) Certified units. All diagnostic X-ray systems certified to comply with 21 CFR 1020 shall meet the requirements of that certification.

(10) Linearity. The difference between the ratio of exposure to mAs at one mA or mAs setting and the ratio at another mA or mAs setting shall not exceed 0.10 times the sum of the ratios. This is written as:

$$X_1 - X_2 \leq 0.10\ (X_1 + X_2)$$

Where X_1 and X_2 are the ratios (mR/mAs) for each mA or mAs station.

The test shall be performed at any selections of mA or mAs without regard to focal spot size, provided neither focal spot size is less than 0.45 millimeter.

(11) kVp accuracy. The difference between the indicated and actual kVp of an X-ray machine shall not be greater than ten percent of the indicated kVp, or, alternatively, if available, the accuracy specifications of the control panel manufacturer must be met.

[Statutory Authority: RCW 70.98.050. 94-01-073, § 246-225-040, filed 12/9/93, effective 1/9/94. Statutory Authority: RCW 70.98.050 and 70.98.-080. 91-15-083 (Order 183), § 246-225-040, filed 7/23/91, effective 8/23/91. Statutory Authority: RCW 43.70.040. 91-02-049 (Order 121), recodified as § 246-225-040, filed 12/27/90, effective 1/31/91. Statutory Authority: RCW 70.98.080. 87-01-031 (Order 2450), § 402-28-035, filed 12/11/86; 83-19-050 (Order 2026), § 402-28-035, filed 9/16/83. Statutory Authority: RCW 70.98.050. 81-01-011 (Order 1570), § 402-28-035, filed 12/8/80; Order 1084, § 402-28-035, filed 1/14/76. Formerly WAC 402-28-030 (part).]

WAC 246-225-050 Fluoroscopic X-ray systems. Fluoroscopic X-ray systems shall meet the following requirements:

(1) Limitation of useful beam.

(a) The fluoroscopic tube shall not produce X rays unless the primary barrier is in position to intercept the entire useful beam at all times.

(b) The entire cross section of the useful beam shall be intercepted by the primary protective barrier of the fluoroscopic image assembly at any source-to-image-distance (SID).

(c) Nonimage-intensified fluoroscopic equipment shall not be used.

(d) For fluoroscopic equipment without a spot film device, neither the length nor the width of the fluoroscopic X-ray field in the plane of the image receptor shall exceed that of the visible area of the image receptor by more than three percent of the SID. The sum of the excess length and the excess width shall be no greater than four percent of the SID. Measurements shall be made at the minimum SID available but at no less than 20 centimeters (8 inches) table top to image receptor distance.

(e) For uncertified fluoroscopic equipment with a spot film device, the fluoroscopic X-ray beam with the shutters wide open (during either fluoroscopy itself or spot films) shall be no larger than the dimensions of the largest spot film size for which the device is designed. Measurements shall be made at the minimum SID available, but at no less than 20 centimeters (8 inches) table top to the film plane distance.

(f) For certified (21 CFR 1020) fluoroscopic equipment with a spot film device, neither the length nor the width of the fluoroscopic X-ray field in the plane of the image receptor shall exceed that of the visible area of the image receptor by more than three percent of the SID. The sum of the excess length and width shall be no greater than four percent of the SID. Measurements shall be made at the minimum SID available, but at no less than 20 centimeters (8 inches) table top to film plane distance.

(g) Fluoroscopic equipment beam limitation:

(i) Means shall be provided to reduce the beam size at the plane of the image receptor to 125 square centimeters or less; and

(ii) The minimum field size at the greatest SID shall be equal to or less than 5 centimeters by 5 centimeters.

(2) *Activation of the fluoroscopic tube.* X-ray production in the fluoroscopic mode shall be controlled by a deadman switch.

(3) *Entrance exposure rate allowable limits.*

(a) For equipment with or without automatic brightness control, the exposure rate measured at the point where the center of the useful beam enters the patient shall not exceed 2.58×10^{-3} coulombs per kilogram per minute (ten roentgens per minute), except during film recording of fluoroscopic images or when an optional high level control (HLC) is activated.

(b) For equipment provided with HLC, the equipment shall not be operable at a combination of tube potential and current which will result in an exposure rate in excess of 1.29×10^{-3} coulombs per kilogram per minute (5 roentgens per minute) at the point where the center of the useful beam enters the patient, unless the HLC is activated.

(i) Special means of activation of high level controls, such as additional pressure applied continuously by the operator, shall be required to avoid accidental use.

(ii) A continuous signal audible to the fluoroscopist shall indicate the high level control is employed.

(c) Measuring compliance of entrance exposure rate limits. Compliance with subsection (3) of this section shall be determined as follows:

(i) Movable grids and compression devices shall be removed from the useful beam during the measurement;

(ii) If the source is below the table, exposure rate shall be measured 1 centimeter above the table top or cradle;

(iii) If the source is above the table, the exposure rate shall be measured at 30 centimeters above the table top with the end of the beam-limiting device or spacer positioned as closely as possible to the point of measurement;

(iv) In a C-arm type of fluoroscope, the exposure rate shall be measured 30 centimeters from the input surface of the fluoroscopic imaging assembly, with the source positioned at any available SID, provided the end of the beam-limiting device or spacer is no closer than 30 centimeters from the input surface of fluoroscopic imaging assembly; and

(v) In a lateral-type fluoroscope, the exposure rate shall be measured at a point 15 centimeters from the center line of the X-ray table with the end of the beam-limiting device or spacer positioned as closely as possible to the point of measurement. If the table top is movable, the table top shall be positioned as closely as possible to the lateral X-ray source, with the end of the beam-limiting device or spacer no closer than 15 centimeters to the center line of the X-ray table.

(d) Periodic measurement of entrance exposure rate limits.

(i) Periodic measurements of the exposure rate shall be made. An adequate period for such measurements shall be annually or after maintenance of the system affecting the exposure rate.

(ii) Results of exposure rate measurements shall be available where the fluoroscopist has ready access to the measurements while using that fluoroscope. Results of the measurements shall include:

(A) The maximum possible coulombs per kilogram per minute (R/minute), as well as the technique factors associated with it;

(B) The name of the person performing the measurements;

(C) The last date the measurements were performed; and

(D) The type of device used in making the measurements.

(iii) Conditions of measurement:

(A) The kVp shall be adjusted to that which will produce the maximum entrance exposure rate;

(B) The high level control, if present, shall not be activated;

(C) The X-ray systems that incorporate automatic exposure rate control (automatic brightness control) shall have sufficient material, for example, lead or lead equivalence, placed in the useful beam to produce the maximum output of the X-ray system; and

(D) X-ray systems not incorporating automatic exposure rate control shall utilize whatever combination of kVp, mA, and other selectable parameters that will generate the highest exposure rate of the X-ray system. Materials, for example, an attenuation block, may be placed in the useful beam to protect the imaging system, as long as the material does not affect the measurement of the exposure rate.

(4) *Barrier transmitted radiation rate limits.*

(a) The exposure rate due to transmission through the primary protective barrier with the attenuation block in the useful beam, combined with radiation from the image intensifier, if provided, shall not exceed 5.16×10^{-7} coulombs per kilogram per hour (2 milliroentgens per hour) for each 2.58×10^{-4} coulombs per kilogram per minute (roentgen per minute) of entrance exposure rate. The barrier transmission measurement shall be made at 10 centimeters from an accessible surface of the fluoroscopic imaging assembly beyond the plane of the image receptor.

(b) Measuring compliance of barrier transmission.

(i) The exposure rate due to transmission through the primary protective barrier combined with radiation from the image intensifier shall be determined by measurements averaged over an area of 100 square centimeters with no linear dimension greater than 20 centimeters.

(ii) If the source is below the table top, the measurement shall be made with the input surface of the fluoroscopic imaging assembly positioned 30 centimeters above the table top.

(iii) If the source is above the table top and the SID is variable, the measurement shall be made with the end of the beam-limiting device or spacer as close to the table top as it can be placed, provided the beam-limiting device or spacer shall not be closer than 30 centimeters.

(iv) Movable grids and compression devices shall be removed from the useful beam during the measurement.

(5) *Indication of potential and current.* During fluoroscopy and cinefluorography, X-ray tube potential and current shall be continuously indicated.

(6) *Source-skin distance (SSD).* The source to skin distance shall not be less than:

(a) 38 centimeters on stationary fluoroscopes;

(b) 30 centimeters on mobile fluoroscopes; and

(c) 20 centimeters for image intensified fluoroscopes used for specific surgical application. The user must provide precautionary measures for the use of the fluoroscope due to its short SSD.

(7) *Fluoroscopic timer.*

(a) Means shall be provided to preset the cumulative on-time of the fluoroscopic tube. The maximum cumulative time of the timing device shall not exceed five minutes without resetting.

(b) A signal audible to the fluoroscopist shall indicate the completion of a preset cumulative on-time. Such signal shall continue to sound while X rays are produced until the timing device is reset. Alternatively, the timing device may terminate exposures at the end of the preset time.

(c) Total fluoroscopic on-time for each patient shall be recorded, either in patient's chart or in a separate log.

(8) *Control of scattered radiation.*

(a) Fluoroscopic table designs when combined with normal operating procedures shall be such that no unprotected part of staff or ancillary person's body shall be exposed to unattenuated scattered radiation which originates from under the table. The attenuation required shall be not less than 0.25 mm lead equivalent.

(b) Equipment configuration when combined with procedures shall be such that no portion of staff or ancillary per-

son's body, except the extremities, shall be exposed to the unattenuated scattered radiation emanating from above the table top unless:

(i) The radiation has passed through not less than 0.25 mm lead equivalent material, for example, drapes, Bucky-slot cover-sliding or folding panel, or self-supporting curtains, in addition to lead equivalency provided by the protective apron referred to under WAC 246-225-020 (2)(e); and

(ii) Exceptions to subdivision (b) of this subsection may be made in some special procedures where a sterile field will not permit the use of the normal protective barriers. Where the use of prefitted sterilized covers for the barriers is practical, the department shall not permit such exception.

(9) *Radiation therapy simulation systems.* Radiation therapy simulation systems shall be exempt from the requirements of subsection (3) of this section. In addition, these systems shall be exempt from:

(a) Subsections (1) and (4) of this section provided such systems are designed and used in such a manner that no individual other than the patient is in the X-ray room when the system is producing X rays; and

(b) Subsection (7) of this section if such systems are provided with a means of indicating the cumulative time that an individual patient has been exposed to X rays.

[Statutory Authority: RCW 70.98.050. 94-01-073, § 246-225-050, filed 12/9/93, effective 1/9/94. Statutory Authority: RCW 70.98.050 and 70.98.-080. 91-15-083 (Order 183), § 246-225-050, filed 7/23/91, effective 8/23/91. Statutory Authority: RCW 43.70.040. 91-02-049 (Order 121), recodified as § 246-225-050, filed 12/27/90, effective 1/31/91. Statutory Authority: RCW 70.98.080. 87-01-031 (Order 2450), § 402-28-040, filed 12/11/86; 83-19-050 (Order 2026), § 402-28-040, filed 9/16/83. Statutory Authority: RCW 70.98.050. 81-01-011 (Order 1570), § 402-28-040, filed 12/8/80; Order 1084, § 402-28-040, filed 1/14/76; Order 1, § 402-28-040, filed 1/8/69; Rules (part), filed 10/26/66.]

WAC 246-225-060 Radiographic systems other than fluoroscopic, dental intraoral, or veterinary systems—Beam limitation. The useful beam shall be limited to the area of clinical interest and show evidence of collimation. This shall be deemed to have been met if a positive beam limiting device has been properly used or if evidence of collimation is shown on at least three sides or three corners of the film, (for example, projections from the shutters of the collimator, cone cutting at the corners or a border at the film's edge).

(1) *General purpose stationary and mobile X-ray systems.*

(a) There shall be provided a means for stepless adjustment of the size of the X-ray field such that at least two dimensions of the X-ray field are independently variable. The minimum field size at a SID of 100 centimeters shall be equal to or less than ten by ten centimeters.

(b) Adequate means shall be provided for visually defining the perimeter of the X-ray field. The total misalignment of the edges of the visually defined field with the respective edges of the X-ray field along either the length or width of the visually defined field shall not exceed 2 percent of the distance from the source to the center of the visually defined field when the surface upon which it appears is perpendicular to the central axis of the X-ray beam.

(2) *In addition to the requirements of WAC 246-225-060(1) above all stationary X-ray systems shall meet the following requirements*:

(a) Means shall be provided to indicate when the axis of the X-ray beam is perpendicular to the plane of the image receptor and to align the center of the X-ray field with respect to the center of the image receptor to within 2 percent (5 percent for equipment manufactured prior to August 1974) of the SID. Dental lateral jaw examinations shall be excluded from this requirement;

(b) The beam-limiting device shall numerically indicate the field size in the plane of the image receptor to which it is adjusted;

(c) Indication of field size dimensions and SID's shall be specified in inches and/or centimeters;

(d) Indication of field size dimensions shall be such that aperture adjustments result in X-ray field dimensions in the plane of the image receptor to within 2 percent of the SID when the beam axis is perpendicular to the plane of the image receptor.

(3) *Radiographic equipment designed for only one image receptor size at a fixed SID shall be provided with means to limit the field at the plane of the image receptor to dimensions no greater than those of the image receptor, and to align the center of the X-ray field with the center of the image receptor to within 2 percent of the SID.*

(4) *Special purpose X-ray systems.*

(a) These systems shall be provided with means to limit the X-ray field in the plane of the image receptor so that such field does not exceed each dimension of the image receptor by more than 2 percent of the SID when the axis of the X-ray beam is perpendicular to the plane of the image receptor.

(b) These systems shall be provided with means to align the center of the X-ray field with the center of the image receptor to within 2 percent (5 percent for equipment manufactured prior to August 1974) of the SID.

(c) The above WAC 246-225-060 (4)(a) and 246-225-060 (4)(b) may be met with a system that meets the requirements for a general purpose X-ray system as specified in WAC 246-225-060(1) or, when alignment means are also provided, may be met with either:

(i) An assortment of removable, fixed-aperture, beam-limiting devices sufficient to meet the requirement for each combination of image receptor size and SID for which the unit is designed (each such device shall have clear and permanent markings to indicate the image receptor size and SID for which it is designed); or

(ii) A beam-limiting device having multiple fixed apertures sufficient to meet the requirement for each combination of image receptor size and SID for which the unit is designed. Permanent, clearly legible markings shall indicate the image receptor size and SID for which each aperture is designed and shall indicate which aperture is in position for use.

[Statutory Authority: RCW 70.98.050 and 70.98.080. 91-15-083 (Order 183), § 246-225-060, filed 7/23/91, effective 8/23/91. Statutory Authority: RCW 43.70.040. 91-02-049 (Order 121), recodified as § 246-225-060, filed 12/27/90, effective 1/31/91. Statutory Authority: RCW 70.98.080. 83-19-050 (Order 2026), § 402-28-051, filed 9/16/83. Statutory Authority: RCW 70.98.050. 81-01-011 (Order 1570), § 402-28-051, filed 12/8/80; Order 1084, § 402-28-051, filed 1/14/76. Formerly WAC 402-28-050 (part).]

WAC 246-225-070 Radiographic systems other than fluoroscopic, dental intraoral, or veterinary systems—Radiation exposure control devices. (1) *Timers.* Means shall be provided to terminate the exposure at a preset time interval, preset product of current and time, a preset number of pulses, or a preset radiation exposure to the image receptor. In addition, it shall be impossible to make an exposure when the timer is set to a zero or off position if either position is provided.

(2) *X-ray control (exposure switch)*:

(a) A control which shall be the equivalent of a deadman switch, shall be incorporated into each X-ray system such that an exposure can be terminated at any time except for:

(i) Exposure of one-half second or less, or

(ii) During serial radiography when means shall be provided to permit completion of any single exposure of the series in process.

(b) Each X-ray control shall be located in such a way as to meet the following requirements:

(i) Stationary X-ray systems shall be required to have the X-ray exposure switch permanently mounted in a protected area so that the operator has no choice but to remain in that protected area during the entire exposure;

(ii) Mobile and portable X-ray systems shall have:

(A) An exposure cord which can extend for a minimum of 12 feet from the patient; or

(B) A protective barrier of 0.25 millimeter lead equivalent between the patient and the operator.

(c) Each X-ray control shall provide visual evidence to the operator that X rays are being produced and an audible signal that the exposure has terminated.

(3) *Automatic exposure controls (phototimers).* When an automatic exposure control is provided:

(a) Indication shall be made on the control panel when this mode of operation is selected;

(b) When the X-ray tube potential is equal to or greater than 50 kVp, the minimum exposure time for field emission equipment rated for pulsed operation shall be equal to or less than the interval equivalent to two pulses;

(c) The minimum exposure time for all equipment other than that specified in WAC 246-225-070 (3)(b) shall be equal to or less than 1/60 second or a time interval required to deliver 5 mAs, whichever is greater.

(4) *Timer reproducibility.* With a timer setting of 0.5 seconds or less, the difference between the maximum exposure time (Tmax) and the minimum exposure time (Tmin) shall be less than or equal to 10% of the average exposure time (T), when four timer tests are performed:

$$(Tmax - Tmin) \leq 0.1T$$

[Statutory Authority: RCW 70.98.050 and 70.98.080. 91-15-083 (Order 183), § 246-225-070, filed 7/23/91, effective 8/23/91. Statutory Authority: RCW 43.70.040. 91-02-049 (Order 121), recodified as § 246-225-070, filed 12/27/90, effective 1/31/91. Statutory Authority: RCW 70.98.080. 83-19-050 (Order 2026), § 402-28-052, filed 9/16/83. Statutory Authority: RCW 70.98.050. 81-01-011 (Order 1570), § 402-28-052, filed 12/8/80; Order 1084, § 402-28-052, filed 1/14/76. Formerly WAC 402-28-050 (part).]

WAC 246-225-080 Radiographic systems other than fluoroscopic, dental intraoral, or veterinary systems—Source-to-skin or receptor distance. (1) *Limitation.* All radiographic systems shall be provided with a durable, securely fastened means to limit the source-to-skin distance to not less than 23 centimeters. The requirement can be met when the collimator or cone provides the required limits.

(2) *Source to receptor distance measuring device.* All radiographic systems shall be provided with a device or reference, other than a collimator light localizer, which will indicate the selected source to image receptor distance (SID) to within 2 percent of the indicated SID.

[Statutory Authority: RCW 43.70.040. 91-02-049 (Order 121), recodified as § 246-225-080, filed 12/27/90, effective 1/31/91. Statutory Authority: RCW 70.98.080. 83-19-050 (Order 2026), § 402-28-053, filed 9/16/83. Statutory Authority: RCW 70.98.050. 81-01-011 (Order 1570), § 402-28-053, filed 12/8/80; Order 1084, § 402-28-053, filed 1/14/76. Formerly WAC 402-28-050 (part).]

WAC 246-225-090 Radiographic systems other than fluoroscopic and dental intraoral—Exposure reproducibility. The exposure produced shall be reproducible to within the following criterion: When all technique factors are held constant, the coefficient of variation shall not exceed 0.05.

(1) For manual exposure control mode, this shall be deemed to have been met if when four exposures at identical technique factors are made, the difference between the maximum exposure value (Emax) and the minimum exposure value (Emin) shall be less than or equal to 10% of the average exposure (E):

$$(Emax) - (Emin) \leq 0.10E$$

(2) For phototimed exposure control mode, this shall be deemed to have been met if when four exposures at identical technique factors are made, the difference between the maximum exposure value (Emax) and the minimum exposure value (Emin) shall be less than or equal to 10% of the average exposure (E):

$$(Emax) - (Emin) \leq 0.1E$$

The four exposures are to be made under the following conditions in phototimed mode:

(a) The kV is held constant.

(b) The mA, if selectable, is held constant.

(c) The selected density, if selectable, is held constant.

(d) Selection of phototimer radiation detectors (single or multiple detectors selected), if available, is varied for each of the four exposures.

(e) The same attenuator is placed in the X-ray field between the selected phototimer radiation detectors (photocells) and the radiation detector used to determine the four exposure values.

(f) The selected phototimer radiation detectors (photocells) are within the X-ray field during each exposure measurement and are covered completely by the attenuator.

(3) Systems employing deliberately mismatched phototimed cells are permitted, providing written specifications for the mismatch are available for inspection.

[Statutory Authority: RCW 70.98.050 and 70.98.080. 91-15-083 (Order 183), § 246-225-090, filed 7/23/91, effective 8/23/91. Statutory Authority: RCW 43.70.040. 91-02-049 (Order 121), recodified as § 246-225-090, filed 12/27/90, effective 1/31/91. Statutory Authority: RCW 70.98.080. 83-19-050 (Order 2026), § 402-28-054, filed 9/16/83. Statutory Authority: RCW 70.98.050. 81-01-011 (Order 1570), § 402-28-054, filed 12/8/80; Order 1084, § 402-28-054, filed 1/14/76. Formerly WAC 402-28-050 (part).]

WAC 246-225-100 Radiographic systems—Standby radiation from capacitor energy storage equipment. Radiation emitted from the X-ray tube when the exposure switch or timer is not activated shall not exceed a rate of 2 milliroentgens per hour at 5 centimeters from any accessible surface of the diagnostic source assembly, with the beam-limiting device fully open.

[Statutory Authority: RCW 43.70.040. 91-02-049 (Order 121), recodified as § 246-225-100, filed 12/27/90, effective 1/31/91. Statutory Authority: RCW 70.98.050. 81-01-011 (Order 1570), § 402-28-055, filed 12/8/80; Order 1084, § 402-28-055, filed 1/14/76. Formerly WAC 402-28-050 (part).]

WAC 246-225-120 Therapeutic X-ray installations less than 1 MeV. (1) *Equipment requirements.*

(a) *Leakage radiation.* When the tube is operated at its leakage technique factors, the leakage radiation shall not exceed the value specified at the distance specified for the classification of that X-ray system:

(i) Contact therapy systems. Leakage radiation shall not exceed 100 milliroentgens per hour at five centimeters from the surface of the tube housing assembly;

(ii) Zero to one hundred fifty kVp systems. Systems shall have a leakage radiation which does not exceed one roentgen in one hour at one meter from the source;

(iii) One hundred fifty-one to nine hundred ninety-nine kVp systems. The leakage radiation shall not exceed one roentgen in one hour at one meter from the source except systems that operate in excess of 500 kVp may have a leakage radiation at one meter from the source equivalent to the exposure within one hour of the useful beam at one meter from the source multiplied by a factor of 0.001.

(b) *Permanent beam limiting devices.* Permanent fixed diaphragms or cones used for limiting the useful beam shall provide the same or higher degree of protection as that required by the tube housing assembly.

(c) *Removable and adjustable beam limiting devices.*

(i) Removable beam limiting devices shall, for the portion of the useful beam to be blocked by these devices, transmit not more than one percent of the original X-ray beam at the maximum kilovoltage and maximum treatment filter;

(ii) Adjustable beam limiting devices installed after the effective date of this section shall meet the requirements of (c)(i) of this subsection;

(iii) Adjustable beam limiting devices installed before the effective date of this section shall, for the portion of the X-ray beam to be blocked by these devices, transmit not more than five percent of the original X-ray beam at the maximum kilovoltage and maximum treatment filter.

(d) *Filter and wedge systems.* Filter systems shall meet the following requirements:

(i) Filters cannot be accidently displaced from the useful beam at any possible tube orientation;

(ii) Each filter is marked as to its material of construction and its thickness or wedge angle for wedge filters;

(iii) It shall be possible for the operator to determine the presence or absence of each filter in the useful beam when the operator is at the control panel, either by display at the control panel or by direct observation; and

(iv) The filter insertion slot opening shall be covered with an attenuator equivalent to four-pound lead under operating conditions.

(e) *Tube immobilization.* The tube housing assembly shall be capable of being immobilized during stationary treatments.

(f) *Focal spot marking.* The tube housing assembly shall be so marked that it is possible to determine the location of the focal spot to within five millimeters, and such marking shall be readily accessible for use during calibration procedures.

(g) *Timer.*

(i) A timer shall be provided which has a display at the treatment control panel. The timer shall be graduated in minutes and fractions of minutes. The timer shall have a preset time selector and a means of determining elapsed time;

(ii) The timer shall be a cumulative timer which activates with radiation and retains its reading after irradiation is interrupted or terminated;

(iii) The timer shall terminate irradiation when a preselected time has elapsed;

(iv) The timer shall permit accurate presetting and determination of exposure times as short as 1 second;

(v) The timer shall terminate irradiation when set to zero;

(vi) The timer shall not activate until the shutter is opened, when patient irradiation is controlled by a shutter mechanism.

(h) *Control panel functions.* The control panel, in addition to the displays required in other provisions of this chapter, shall have:

(i) An indication of whether X rays are being produced;

(ii) Means for indicating kV and X-ray tube current;

(iii) The means for terminating an exposure at any time;

(iv) A locking device which will prevent unauthorized use of the X-ray system; and

(v) For X-ray equipment manufactured after the effective date of this section, a positive display of specific filter(s) in the beam.

(i) *Source-to-patient distance.* There shall be means of determining the source-to-patient distance to within five millimeters.

(j) *Shutters.* Unless it is possible to bring the X-ray output to the prescribed exposure parameters within five seconds, the entire useful beam shall be automatically attenuated by a shutter having a lead equivalency not less than that of the tube housing assembly. In addition:

(i) After the unit is at operating parameters, the shutter shall be controlled electrically by the operator from the control panel;

(ii) An indication of shutter position shall appear at the control panel.

(k) *Low filtration X-ray tubes.* Each X-ray system equipped with a beryllium or other low-filtration window shall be clearly labeled as such upon the tube housing assembly and at the control panel;

(l) *Alignment.* When the therapy X-ray system is equipped with a light field indicating the X-ray field, the misalignment of one field edge to the other shall not exceed one percent of any source-to-treatment distance.

(2) *Facility design requirements for systems capable of operating above 50 kVp.*

In addition to shielding adequate to meet requirements of chapters 246-235 and 246-221 WAC and the shielding plan

review provisions of WAC 246-225-030, the treatment room shall meet the following design requirements:

(a) *Warning lights.* Treatment rooms to which access is possible through more than one entrance shall be provided with warning lights, in a readily observable position near the outside of all access doors, which will indicate when the useful beam is "on." Or, as an alternative, entrances other than the main one shall be equipped with interior locks, activated for the period of exposure, and the main entrance shall be under control of the operator.

(b) *Voice communication.* Provision shall be made for two-way aural communication between the patient and the operator at the control panel; however, where excessive noise levels make aural communication impractical, other methods of communication shall be used.

(c) *Viewing systems.* Windows, mirrors, closed-circuit television, or an equivalent system shall be provided to permit continuous observation of the patient during irradiation and shall be so located that the operator can observe the patient from the control panel. When the primary viewing system is by electronic means (e.g., television), an alternate viewing system shall be available for use in the event of electronic failure or treatment must be discontinued until repair is made. If treatment is to be discontinued, this policy shall be included in the written safety procedures. A copy of the safety procedures shall be provided to the operator.

(d) *Additional requirements.* Treatment rooms which contain an X-ray system capable of operating above 150 kVp shall meet the following additional requirements:

(i) All necessary shielding, except for any beam interceptor, shall be provided by fixed barriers;

(ii) The control panel shall be outside the treatment room;

(iii) All doors of the treatment room shall be electronically connected to the control panel such that X-ray production cannot occur unless all doors are closed;

(iv) When the doors referred to in (d)(iii) of this subsection are opened while the X-ray tube is activated:

(A) X-ray production shall terminate within one second; or

(B) The radiation at a distance of one meter from the source shall be reduced to less than 100 milliroentgens per hour within one second.

(v) After the radiation output of the X-ray tube has been affected by the opening of any door referred to in (d)(iii) of this subsection, it shall be possible to restore the X-ray system to full operation only upon:

(A) Closing the door; and subsequently

(B) Reinitiating the exposure at the control panel.

(e) *Calibrations.*

(i) The calibration of an X-ray system shall be performed at intervals not to exceed one year and after any change or replacement of components which could cause a change in the radiation output.

(ii) The calibration of the radiation output of the X-ray system shall be performed by a qualified expert who is physically present at the facility during such calibration.

(iii) Calibration of the radiation output of an X-ray system shall be performed with a calibrated instrument. The calibration of such instrument shall be traceable to a national standard. The instrument shall have been calibrated within the preceding two years.

(iv) The calibrations made pursuant to (e)(i) of this subsection shall be such that the dose at a reference point in soft tissue can be calculated to within ± five percent.

(v) The calibration of the X-ray system shall include, but not be limited to, the following determinations:

(A) The exposure rates for each combination of field size, technique factors, filter, and treatment distance used;

(B) The degree of alignment between the radiation field and the field indicated by the localizing device if such device is present; and

(C) An evaluation of the uniformity of the radiation field symmetry for the field sizes used and any dependence upon tube housing assembly orientation.

(vi) Records of calibration performed pursuant to (e) of this subsection shall be maintained by the registrant for two years after completion of the calibration.

(vii) A copy of the most recent X-ray system calibration shall be available for use by the operator at the control panel.

(f) *Operating procedures.*

(i) When a patient must be held in position for radiation therapy, mechanical supporting or restraining devices shall be used;

(ii) The tube housing assembly shall not be held by an individual during exposures;

(iii) No individual other than the patient shall be in the treatment room unless such individual is protected by a barrier sufficient to meet the requirements of chapter 246-221 WAC. No individual other than the patient shall be in the treatment room during exposures when the kVp exceeds 150;

(iv) The X-ray system shall not be used in the administration of radiation therapy unless the requirements of (e) of this subsection have been met.

[Statutory Authority: RCW 70.98.050 and 70.98.080. 91-15-083 (Order 183), § 246-225-120, filed 7/23/91, effective 8/23/91. Statutory Authority: RCW 43.70.040. 91-02-049 (Order 121), recodified as § 246-225-120, filed 12/27/90, effective 1/31/91. Statutory Authority: RCW 70.98.080. 87-01-031 (Order 2450), § 402-28-091, filed 12/11/86; 83-19-050 (Order 2026), § 402-28-091, filed 9/16/83. Statutory Authority: RCW 70.98.050. 81-01-011 (Order 1570), § 402-28-091, filed 12/8/80.]

WAC 246-225-130 X-ray and electron therapy systems with energies of one MeV and above. Chapter 246-229 WAC except WAC 246-229-100 (3) and (4) shall apply to medical facilities using therapy systems with energies 1 MeV and above.

(1) *Definitions.* In addition to the definitions provided in WAC 246-225-010, the following definitions shall be applicable to this section.

(a) "Applicator" means a structure which indicates the extent of the treatment field at a given distance from the nominal source and which may or may not incorporate an additional beam-limiting device.

(b) "Beam scattering foil" means a device which scatters and flattens a beam of electrons.

(c) "Central axis of the beam" means a line passing through the origin of the source and the center of the plane figure formed by the edge of the secondary collimating jaws when in a symmetric mode.

(d) "Dose monitoring system" means a system of devices for the detection and display of quantities of radiation.

(e) "Dose monitor unit" means a unit from which the absorbed dose can be calculated.

(f) "Existing equipment" means therapy systems subject to this section which were manufactured on or before the effective date of these regulations.

(g) "Field flattening device" means an absorber used to homogenize the dose rate over the area of a useful beam of X-rays.

(h) "Field size" means the dimensions of an area in a plane perpendicular to the specified direction of the beam of incident radiation at a maximum dose depth. Determine dimensions by fifty percent decrement lines.

(i) "Gantry" means that part of the system supporting and allowing possible movements of the radiation head.

(j) "Interruption of irradiation" means the stopping of irradiation with the possibility of continuing irradiation without resetting of the operating conditions at the control panel.

(k) "Isocenter" means a fixed point in space located at the intersection of the rotation axes of the principal movements of the therapy system.

(l) "Moving beam therapy" means radiation therapy with relative displacement of the useful beam and the patient during irradiation.

(m) "New equipment" means systems subject to this section which were manufactured after effective date of these regulations.

(n) "Nominal source" means a point from which radiation originates.

(o) "Normal treatment distance" means the distance between the virtual source and a reference point on the central axis of the beam. The reference is located at a position on the central axis at a specified distance from the nominal source.

(p) "Patient" means an individual subjected to examination and treatment.

(q) "Phantom" means a volume of material behaving in a manner similar to tissue with respect to the attenuation and scattering of radiation.

(r) "Primary dose monitoring system" means a system which will monitor the quantity of radiation produced during irradiation and which will terminate irradiation when a preselected number of dose monitor units have been acquired.

(s) "Radiation treatment prescription" means the absorbed dose which is intended to be delivered to the treatment volume.

(t) "Radiation head" means the structure from which the useful beam emerges.

(u) "Redundant dose monitoring combination" means a combination of two dose monitoring systems in which both systems are arranged to terminate irradiation in accordance with a preselected number of dose monitor units.

(v) "Secondary dose monitoring system" means a system which will terminate irradiation in the event of failure of the primary system.

(w) "Shadow tray" means a device attached to the radiation head to support auxiliary beam limiting material.

(x) "Stationary beam therapy" means radiation therapy without relative displacement of the useful beam and the patient during irradiation.

(y) "Target" means that part of a radiation source which intercepts a beam of accelerated particles with subsequent emission of other radiation.

(z) "Termination of irradiation" means the stopping of irradiation in a fashion which will not permit continuance of irradiation without the resetting of operating conditions at the control panel.

(aa) "Treatment field" means the cross-sectional area of the patient's tissue which is to be irradiated.

(bb) "Treatment volume" means that portion of the patient's body which is to be irradiated.

(2) *Requirements for equipment.*

(a) *Leakage radiation to the patient area.*

(i) New equipment shall meet the following requirements:

(A) For all operating conditions, the dose equivalent in rem due to leakage radiation, including X-ray and electrons, but excluding neutrons, at any point in a circular plane of two meters radius centered on and perpendicular to the central axis of the beam at the normal treatment distance and outside the maximum useful beam, shall not exceed 0.1 percent of the maximum dose equivalent in rem of the unattenuated useful beam measured at the point of intersection of the central axis of the beam and the plane surface. Measurements shall be averaged over an area up to but not exceeding one hundred square centimeters at the positions specified; and

(B) For each system the registrant shall determine, or obtain from the manufacturer, the leakage radiation existing at the positions specified in (a)(i)(A) of this subsection for specified operating conditions. Records for leakage radiation shall be maintained at the installation for inspection by the department.

(ii) Existing equipment (that installed prior to the effective date of the regulations) shall meet the following requirements:

(A) The leakage radiation, excluding neutrons, at any point in the area specified by (a)(i)(A) of this subsection, where such area intercepts the central axis of the beam one meter from the nominal source, shall not exceed 0.1 percent of the maximum dose equivalent in rems of the unattenuated useful beam measured at the point of intersection of the central axis of the beam and the surface of the reference circular plane. Measurements shall be averaged over an area up to but not exceeding one hundred square centimeters at the positions specified.

(B) For each system, the registrant shall determine, or obtain from the manufacturer, the leakage radiation existing at the positions specified in (a)(ii)(A) of this subsection for specified operating conditions. Records for radiation leakage shall be maintained at the installation for inspection by the department.

(b) *Leakage radiation outside the patient area.*

(i) The dose equivalent in rem due to leakage radiation, except in the area specified in (a) of this subsection, when measured at any point one meter from the path of the charged particle, before the charged particle strikes the target or window, shall not exceed 0.1 percent for X-ray leakage of the maximum dose equivalent in rems of the unattenuated useful beam measured at the point of intersection of the central axis of the beam and the circular plane specified in (a) of this subsection.

(ii) The registrant shall determine, or obtain from the manufacturer, the actual leakage radiation existing at the positions specified in (a) of this subsection for specified operating conditions. Measurements shall be averaged over an area up to but not exceeding one hundred square centimeters at the positions specified.

(c) *Beam-limiting devices.* Secondary beam-limiting devices shall be provided and such devices shall transmit no more than two percent of the useful beam for the portion of the useful beam attenuated by the beam-limiting device. The neutron component of the useful beam shall not be included in this requirement.

(d) *Beam-modifying devices.*

(i) When the absorbed dose rate information required by subsection (2)(q) of this section is dependent on operation with a beam-flattening or beam-scattering device in place, the device shall be removable from the machine only by the use of tools.

(ii) In systems using interchangable beam-flattening devices or beam-scattering foils:

(A) Irradiation shall not be possible until a selection of beam-modifying device is made and verified at the treatment control panel;

(B) An interlock system shall be provided to prevent irradiation when the beam-modifying device selected is not in the correct position; and

(C) A display at the control panel shall indicate what beam-modifying device is selected.

(e) Wedges.

(i) Presence of wedges in the beam shall be indicated at the control panel, by direct observation or by electronic means.

(ii) Each wedge removable from the system shall be clearly identified as to that wedge's material of construction, thickness, and wedge angle.

(iii) An interlock shall be provided to prevent irradiation when a wedge selection carried out in the treatment room does not agree with the wedge selection indicated at the control panel.

(f) *Beam quality.* The registrant shall obtain from the therapy X-ray system manufacturer, and have available, the following information:

(i) At various beam energies, the X-ray absorbed dose expressed as a fraction of maximum absorbed dose;

(ii) At various beam energies, the absorbed dose at the surface of the skin as a fraction of the maximum absorbed dose; and

(iii) The maximum percentage absorbed dose due to stray neutrons in the useful beam at specified operating conditions.

(g) *Beam monitors.* Therapy systems shall be provided with radiation detectors in the radiation head.

(i) New equipment shall be provided with two or more radiation detectors. The detectors shall be incorporated into two monitoring systems arranged either as a primary/primary combination or as a primary/secondary combination.

(ii) Existing equipment shall be provided with one or more radiation detectors. The detector shall be incorporated into a primary system.

(iii) The detectors and system where the detector is incorporated shall meet the following requirements:

(A) Each primary system shall have a detector which is a transmission full-beam detector placed on the patient side of beam-modifying devices;

(B) The detectors shall be removable only with tools and shall be interlocked to prevent incorrect positioning;

(C) Each detector shall be capable of independently monitoring and controlling the useful beam;

(D) Each detector shall form part of a dose-monitoring system from whose readings in dose monitor units the absorbed dose, at a reference point in the treatment volume can be calculated;

(E) For new equipment, the design of the dose-monitoring systems of subsection (2)(i) of this section shall assure the malfunctioning of one system shall not affect the correct functioning of the second system. In addition, the failure of an element common to both systems shall terminate irradiation.

(F) Each dose monitoring system shall have a legible display at the treatment control panel. Each display shall:

(I) Maintain a reading until intentionally reset to zero;

(II) Have only one scale and no scale multiplying factors in new equipment; and

(III) Utilize a design so increasing dose is displayed by increasing numbers and shall be designed so, in the event of an overdosage of radiation, the absorbed dose may be accurately determined under normal conditions of use or foreseeable failures.

(G) In the event of power failure, the dose-monitoring information required in subsection (2)(i) of this section displayed at the control panel at the time of failure shall be retrievable in one or more systems.

(h) *Beam symmetry.*

(i) A therapy machine installed after the effective date of these regulations shall have the capability of comparing the dose rates in each of the four quadrants of the central eighty percent of the useful beam.

(ii) Beam symmetry information shall be displayed at the treatment control panel making possible the following differential between quadrants:

(A) Five percent for straight-through accelerators; and

(B) Three percent for bending-magnet accelerators.

(iii) Beam asymmetry in excess of a ten percent quadrant differential shall cause treatment to terminate, or shall prevent irradiation.

(i) *Selection and display of dose monitor units.*

(i) Irradiation shall not be possible until a selection of a number of dose monitor units is made at the treatment control panel.

(ii) After useful beam termination, it shall be necessary manually to reset the preselected dose monitor units before treatment is reinitiated.

(iii) The preselected number of dose monitor units shall be displayed at the treatment control panel until reset manually for the next irradiation.

(j) *Termination of irradiation by the dose monitoring system.*

(i) Each of the required monitoring systems shall be capable of independently terminating an irradiation. Provision shall be made to test the correct operation of each system.

(ii) Each primary system shall terminate irradiation when the preselected number of dose monitor units is detected by the system.

(iii) Each secondary system shall terminate irradiation when a maximum of the preselected number of dose monitor units plus forty is detected by the system.

(iv) For new equipment, indicators on the control panel shall show which monitoring system terminated the beam.

(k) *Interruption switches.* It shall be possible to interrupt irradiation and equipment movements at any time from the operator's position at the treatment control panel. Following any interruption, it shall be possible to restart irradiation by operator action without any reselection of operating conditions. If any change is made of a preselected value during an interruption, the equipment shall go to termination condition.

(l) *Termination switches.* It shall be possible to terminate irradiation and equipment movements, or go from an interruption condition to termination conditions, at any time from the operator's position at the treatment control panel.

(m) *Timer.*

(i) A timer shall be provided which has a display at the treatment control panel. The timer shall be graduated in minutes and decimals of minutes. The timer shall have a preset time selector and an elapsed time indicator.

(ii) The timer shall be a cumulative timer which switches on and off with the radiation and retains its reading after irradiation is interrupted or terminated. It shall be necessary to zero and subsequently reset the elapsed time indicator and the preset time selector after irradiation is terminated before irradiation shall again be possible.

(iii) The timer shall terminate irradiation when a preselected time has elapsed if the dose monitoring systems fail to terminate irradiation.

(n) *Selection of radiation type.* Equipment capable of both X-ray therapy and electron therapy shall meet the following requirements:

(i) Irradiation shall not be possible until a selection of radiation type is made at the treatment control panel;

(ii) An interlock system shall be provided to insure that the equipment can emit only the selected radiation type;

(iii) An interlock system shall be provided to prevent irradiation if selected operations carried out in the treatment room do not agree with the selected operations carried out in the treatment control panel;

(iv) With the exception of a specified number of dose monitor units for the purpose of portal film exposures, an interlock system shall be provided to prevent irradiation with X-rays when electron applicators are in place and to prevent irradiation with electrons when accessories for X-ray therapy are in place; and

(v) The radiation type selected shall be displayed at the treatment control panel before and during irradiation.

(o) *Selection of energy.* Equipment capable of generating radiation beams of different energies shall meet the following requirements:

(i) Irradiation shall not be possible until a selection of energy is made at the treatment control panel;

(ii) An interlock system shall be provided to insure the equipment can emit only the energy of selected radiation;

(iii) An interlock system shall be provided to prevent irradiation if selected operations carried out in the treatment room do not agree with the selected operations carried out at the treatment control panel; and

(iv) The energy selected shall be displayed at the treatment control panel before and during irradiation.

(p) *Selection of stationary beam therapy or moving beam therapy.* Equipment capable of both stationary beam therapy and moving beam therapy shall meet the following requirements:

(i) Irradiation shall not be possible until a selection of stationary beam therapy or moving beam therapy is made at the treatment control panel;

(ii) An interlock system shall be provided to insure the equipment can operate only in the selected mode;

(iii) An interlock system shall be provided to prevent irradiation when any selected operations carried out in the treatment room do not agree with the selected operations carried out at the treatment control panel;

(iv) An interlock system shall be provided to terminate irradiation when the movement stops during moving beam therapy;

(v) Moving beam therapy shall be controlled so the required relationship between the number of dose monitor units and movement is obtained; and

(vi) The mode of operation shall be displayed at the treatment control panel.

(q) *Absorbed dose rate.* For new equipment, a system shall be provided from whose readings the absorbed dose rate at a reference point in the treatment volume can be calculated.[3] In addition:

(i) The quotient of the number of dose monitor units by time shall be displayed at the treatment control panel; and

(ii) If the equipment can deliver, under any conditions, an absorbed dose rate at the normal treatment distance more than twice the maximum value specified by the manufacturer's anticipated dose rate for any machine parameters utilized, a device shall be provided which terminates irradiation when the absorbed dose rate exceeds a value twice the specified maximum. The value at which the irradiation is terminated shall be in a registrant-maintained record.

(r) *Location of focal spot and beam orientation.* The registrant shall determine, or obtain from the manufacturer, the location with reference to an accessible point on the radiation head of:

(i) The X-ray target or the virtual source of X-rays;

(ii) The electron window or the scattering foil;

(iii) All possible orientations of the useful beam.

(s) *System interlock checks.* Capabilities shall be provided to check radiation safety interlocks. When preselection of operating conditions requires action in the treatment room and at the treatment control panel, selection at one location shall not give a display at the other location until the requisite selected operations in both locations are completed.

(t) *Facility and shielding requirements.* In addition to chapter 246-221 WAC, the following design requirements shall apply:

(i) Except for entrance doors or beam interceptors, required barriers shall be fixed barriers;

(ii) The treatment control panel shall be located outside the treatment room;

(iii) Windows, mirrors, closed-circuit television, or other equivalent viewing systems shall be provided to permit con-

tinuous observation of the patient during irradiation and shall be located so the operator may observe the patient from the treatment control panel. When the viewing system is by electronic means, for example, by television, an alternate viewing system shall be provided for use in the event of the primary system failure, or, alternatively, treatments shall be discontinued until the viewing system is again functional;

(iv) Provision shall be made for two-way aural communication between the patient and the operator at the treatment control panel. However, where excessive noise levels make aural communications impractical, other methods of communication shall be used;

(v) Treatment rooms to which access is possible through two entrances or more shall be provided with warning lights and shall indicate when the useful beam is "on" in a readily observable position near the outside of all access doors; and

(vi) Interlocks shall be provided so entrance doors shall be closed before treatment is initiated or continued. When the radiation beam is interrupted by any door opening, it shall be possible to restore the machine to operation only by closing the door and reinitiating exposure by manual action at the control panel.

(u) *Surveys, calibrations, spot checks and operating procedures.*

(i) Survey.

(A) New facilities, and existing facilities not previously surveyed, shall have a survey made by, or under the direction of, a qualified expert. Such surveys shall also be done after a change in the facility or equipment causing a significant increase in radiation hazard.

(B) The registrant shall obtain a written report of the survey from the qualified expert and the registrant shall transmit a copy of the report to the department.

(C) The report shall indicate instances where the installation, in the opinion of the qualified expert, is in violation of applicable regulations and shall cite the section violated.

(ii) Calibrations.

(A) The calibration of systems subject to this section shall be performed before the system is first used for irradiation of patient and thereafter at time intervals which do not exceed twelve months and after any change which significantly alters the calibration, spatial distribution, or other characteristics of the therapy beam.

(B) The calibration shall be performed by a qualified expert.

(C) Calibration of the dose equivalent of the therapy beam shall be performed with a measurement instrument of which the calibration is traceable to national standards of exposure or absorbed dose and which shall have been calibrated within the preceding two years.

(D) Calibrations made under subsection (2)(u)(ii) of this section shall require the dose at a reference point in soft tissue be calculated within ± 5 percent.

(E) The calibration of the therapy beam shall include, but not be limited to, the following determinations:

(I) Verification that the equipment is operating in compliance with the design specifications concerning the light localizer, the side light and back-pointer alignment with the isocenter, when applicable, variation in the axis of rotation for the table, gantry and jaw system, and beam flatness and symmetry at specified depths;

(II) The output factors in terms of dose per monitor unit or dose per minute at a specific depth in a phantom for the range of field sizes used, for each effective energy, and for each treatment distance used for radiation therapy;

(III) The congruence between the radiation field and the field indicated by the localizing device; and

(IV) The uniformity of the radiation field and its dependency upon the direction of the useful beam.

(F) Records of the calibration performed under subsection (2)(u)(ii) of this section shall be maintained by the registrant for two years after completion of the calibration.

(G) A copy of the latest calibration performed under subsection (2)(u)(ii) of this section shall be available for operator use.

(iii) Spot checks. Spot checks shall be performed on the system subject to this section. Such spot checks shall meet the following requirements:

(A) A qualified expert shall develop, in writing, spot check procedures;

(B) The measurements taken during spot checks shall demonstrate the degree of consistency of the operating characteristics affecting the radiation output of the system or the radiation delivered to a patient during a therapy procedure;

(C) The spot check procedures shall specify the frequency of tests or measurements performed;

(D) For systems where beam quality can vary significantly, spot checks shall include quality checks;

(E) Where a system has built-in devices which provide a self-check of any parameter during irradiation, the spot check procedures shall require the parameter be independently verified at specific time intervals;

(F) Erratic spot checks or inconsistent spot checks of calibration data shall be promptly investigated and corrected before the system is used for patient irradiation;

(G) When a spot check indicates a significant change in the operating characteristics of a system, as specified in the qualified expert's spot check procedures, the system shall be recalibrated as required under subsection (2)(u)(ii) of this section;

(H) Records of spot check measurements performed under subsection (2)(u)(iii) of this section shall be maintained by the registrant for a period of one year or for twice as long as the spot check cycle, whichever is greater;

(I) Operating procedures.

(I) No individual other than the patient shall be in the treatment room during treatment of a patient.

(II) If a patient must be held in position during treatment, mechanical supporting or restraining devices shall be used.

(III) The system shall not be used in the administration of radiation therapy unless subsection (2)(u)(i), (ii), and (iii) of this section are met.

[3] The radiation detectors specified under subsection (2)(g) of this section may form part of this system.

[Statutory Authority: RCW 70.98.050 and 70.98.080. 91-15-083 (Order 183), § 246-225-130, filed 7/23/91, effective 8/23/91. Statutory Authority: RCW 43.70.040. 91-02-049 (Order 121), recodified as § 246-225-130, filed 12/27/90, effective 1/31/91. Statutory Authority: RCW 70.98.080. 87-01-031 (Order 2450), § 402-28-101, filed 12/11/86. Statutory Authority: RCW 70.98.050. 81-01-011 (Order 1570), § 402-28-101, filed 12/8/80.]

WAC 246-225-140 Veterinary medicine radiographic installations. (1) *Equipment.*

(a) The protective tube housing shall be of diagnostic type.

See WAC 246-225-040(4).

(b) Diaphragms, cones, or a stepless adjustable collimator shall be used for collimating the useful beam to the area of clinical interest and shall provide the same degree of protection as is required of the housing. Cones or diaphragms, if used, shall be marked with their field size and the distance at which they are to be used.

(c) The half-value layer (HVL) of the useful beam shall not be less than as shown in the following table:

Measured Potential (kilovolts peak)	Half-value Layer (millimeters of aluminum equivalent)
70 and below	1.5
71	2.1
80	2.3
90	2.5
100	2.7
110	3.0
120	3.2

(d) A device shall be provided to terminate the exposure after a preset time or exposure. It must not be possible for the device to allow an exposure when preset at "zero" or "off."

(e) A dead-man type of exposure switch shall be provided, together with an electrical cord of sufficient length, so that the operator can stand out of the useful beam and at least two meters from the animal during all X-ray exposures.

(f) Reproducibility requirements as described under WAC 246-225-090.

(2) *Structural shielding.* All wall, ceiling, and floor areas shall be equivalent to or provided with applicable protective barriers as required in WAC 246-225-030(1).

(3) *Operating procedures.*

(a) In any application in which the operator is not located behind a protective barrier, clothing consisting of a protective apron having a lead-equivalent of not less than 0.25 millimeters shall be worn by the operator and any other individuals in the room during exposures.

(b) No individual other than the operator shall be in the X-ray room while exposures are being made unless such individual's assistance is required.

(c) When an animal or film must be held in position during radiography, mechanical supporting or restraining devices should be used. If the animal must be held by an individual, that individual shall be protected with appropriate shielding devices, such as protective gloves and apron, and that individual shall be so positioned that no part of that individual's body will be struck by the useful beam. The requirements of WAC 246-221-090, Personnel monitoring, and WAC 246-225-020 (2)(h)(iv) apply to such individuals.

[Statutory Authority: RCW 70.98.050 and 70.98.080. 91-15-083 (Order 183), § 246-225-140, filed 7/23/91, effective 8/23/91. Statutory Authority: RCW 43.70.040. 91-02-049 (Order 121), recodified as § 246-225-140, filed 12/27/90, effective 1/31/91. Statutory Authority: RCW 70.98.080. 83-19-050 (Order 2026), § 402-28-110, filed 9/16/83. Statutory Authority: RCW 70.98.050. 81-01-011 (Order 1570), § 402-28-110, filed 12/8/80; Order 1084, § 402-28-110, filed 1/14/76; Order 1, § 402-28-110, filed 1/8/69; Rules (part), filed 10/26/66.]

WAC 246-225-150 X-ray film developing requirements. Compliance with this section is required of healing arts registrants and is designed to ensure the patient and operator exposure is minimized, and to produce optimum image quality and diagnostic information.

(1) Manual processing of films:

(a) The following relationship between temperature of the developer and development time must be used (standard chemistry only):

THERMOMETER READINGS (DEGREES) C	F	MINIMUM DEVELOPING TIMES (MINUTES)
27-	80	2
	79	2
	78	2 1/2
	77	2 1/2
24-	76	3
	75	3
	74	3 1/2
	73	3 1/2
22-	72	4
	71	4
	70	4 1/2
	69	4 1/2
20-	68	5
	67	5 1/2
	66	5 1/2
	65	6
18-	64	6 1/2
	63	7
	62	8
	61	8 1/2
16-	60	9 1/2

(b) *Processing of film.* All films shall be processed to achieve adequate sensitometric performance. This criterion shall be adjudged met if:

(i) Film manufacturer's published recommendations for time and temperature are followed; or

(ii) Each film is developed in accordance with the time-temperature chart as required under subdivision (a) of this subsection.

(c) Devices shall be available giving:

(i) The actual temperature of the developer; and

(ii) An audible or visible signal indicating the termination of a preset time (in minutes).

(d) Chemical-film processing control.

(i) Chemicals shall be mixed in accordance with the chemical manufacturer's recommendations.

(ii) Developer replenisher shall be periodically added to the developer tank based on the recommendations of the chemical or film manufacturer. Solution may be removed from the tank to permit the addition of an adequate volume of replenisher.

(iii) All processing chemicals shall be completely replaced at least every two months.

(2) Automatic film processors shall be set up and maintained so radiographic density and contrast are optimal. This criterion shall be adjudged met if:

(a) Film manufacturer's published specifications for time and temperature are followed. In the absence of such specifications, the film shall be developed using the following chart:

MINIMAL REQUIRED DEVELOPER TEMERATURE		PROCESSOR DEVELOPER IMMERSION TIME*
°C	°F	Seconds
35	95	20
34.5	94	21
34	93	22
33.5	92	23
33	91	24
32	90	25
31.5	89	26
31	88	27
30.5	87	28
30	86	29
29.5	85	30

* Immersion time only, no cross-over time included.

The specified developer temperature and immersion time shall be posted in the dark room or on the automatic processor; and

(b) Replenishment of the developer chemistry is optimal:

(i) The processor shall deliver an adequate rate of developer replenishment; and

(ii) For facilities with a low X-ray workload, standby replenishment, flood replenishment, or periodically sending prefixed films through the processor may be necessary.

(c) Sensitometric tests of processor performance demonstrate the processor is achieving radiographic density and contrast equal to other processor models operating at equivalent developer immersion time and developer temperatures and using comparable chemistry.

(3) *Darkrooms.* Darkrooms shall be constructed so film being processed, handled, or stored will be exposed only to light passed through a safelight filter. The filter shall be of the type specified by the film manufacturer. Bulb wattage in the safelight shall be no greater than fifteen watts. The safelight shall be mounted at least 1.2 meters (four feet) above work areas.

(4) The department shall make X-ray film development and darkroom tests as necessary to determine compliance with this section.

[Statutory Authority: RCW 70.98.050. 94-01-073, § 246-225-150, filed 12/9/93, effective 1/9/94. Statutory Authority: RCW 70.98.050 and 70.98.-080. 91-15-083 (Order 183), § 246-225-150, filed 7/23/91, effective 8/23/91. Statutory Authority: RCW 43.70.040. 91-02-049 (Order 121), recodified as § 246-225-150, filed 12/27/90, effective 1/31/91. Statutory Authority: RCW 70.98.080. 83-19-050 (Order 2026), § 402-28-990, filed 9/16/83; Order 1084, Apendix C (codified as WAC 402-28-990), filed 1/14/76.]

WAC 246-225-160 Mammography. (1) The use of a special purpose X-ray machine designed and used solely for mammography is required. Exempted from this requirement shall be X-ray equipment using xerography for evaluation of breast implant integrity.

(2) All mammographic calibration, evaluation, service, and quality control actions shall be documented in writing and maintained at the facility for a three-year period. Records must be easily accessible to operators of these X-ray units.

(3) All tests requiring the use of a breast phantom shall employ a phantom similar to or identical to the one required by the American College of Radiology for its mammography accreditation program.

(4) Machine requirements:

(a) Mammography X-ray machines must be evaluated upon any major component change and on a yearly basis by a qualified medical physicist. Evaluation shall document (but is not limited to) half-value layer (HVL), kVP accuracy, reproducibility, timer accuracy, resolution achieved with film in use at the facility, focal spot size, mA linearity, light versus X-ray field alignment, and patient exposures (glandular tissue dose) following the measurement protocol in NCRP Report No. 85 (using a breast phantom). This requirement shall include initial acceptance testing upon the X-ray system's installation prior to human use.

(b) The half-value layer (HVL) for film/screen mammography shall be between the values of measured kVp/100 and measured kVp/100 + 0.1 millimeters aluminum. The half-value layer for xerography shall be at least 1.2 mm but no greater than 1.6 mm of aluminum as measured at 50 kVP. The HVL shall include the contribution to filtration made by the compression device.

(c) Exposure reproducibility: Manual techniques. See WAC 246-225-090.

(d) Exposure reproducibility: Photo-timed techniques. Mammographic systems in the AEC mode shall be able to maintain constant film density to within an optical density of ± 0.3 of the average optical density over the range of clinically used kVps, using BR-12 or other breast equivalent material phantom thicknesses of 2 centimeters to 6 centimeters. If the facility has established a technique chart that utilizes varying technical factors for different breast thicknesses, those adjustments in technique may be used when complying with this requirement.

(e) Radiographic timers. See WAC 246-225-070.

(f) kVP accuracy: The kVP accuracy published by the X-ray machine manufacturer shall be maintained at the specified level. For determination of actual versus indicated kVP, the manufacturer's recommendations for testing shall be followed.

(g) mA linearity. See WAC 246-225-040(10).

(h) All special purpose X-ray machines designed solely for mammography and installed after January 1, 1992, shall be equipped with a milli-ampere-second (mAs) read-out device, registering after each phototimed exposure. Alternatively, a means of determining mAs after each exposure shall be provided.

(i) Beam limitation:

(i) Mammographic systems shall be provided with means to limit the useful beam such that the X-ray field at the plane of the image receptor does not extend beyond any edge of the image receptor at any designed SID except the edge of the image receptor designed to be adjacent to the chest wall where the X-ray field may not extend beyond such edge by more than two percent of the SID.

(ii) Beam limiting devices consisting of an assortment of fixed, removable cones sufficient to meet the requirement for each combination of image receptor size and SID for which the unit is designed shall have clear and permanent markings

to indicate the image receptor size and SID for which it is designed.

(iii) When the beam limiting device and image receptor support device are designed to be used to immobilize the breast during a mammographic procedure and the SID may vary, the SID indication specified in WAC 246-225-060 (4)(c)(i) and (ii) shall be the maximum SID for which the beam limiting device or aperture is designed.

(iv) In the absence of a visually defined X-ray field each image receptor support shall have clear and permanent markings to indicate the maximum image receptor size for which it is designed.

(j) The combination of source-to-image distance, magnification, and focal spot size shall result in a radiographic resolution of at least 12 line pairs per millimeter. This standard applies to the mammographic, single emulsion film being used at the facility.

(k) The X-ray machine shall be equipped with a means of immobilizing and compressing the breast with a force of at least twenty-five pounds but no greater than forty pounds.

(l) Dedicated mammographic X-ray units are exempted from the requirements of WAC 246-225-030 (5)(b)(i) provided that appropriate operator shielding is employed (as defined by NCRP Report 49).

(m) *Transmission limit for image receptor supporting devices used for mammography.* For X-ray systems manufactured after September 5, 1978, which are designed only for mammography, the transmission of the primary beam through any image receptor support provided with the system shall be limited such that the exposure 5 centimeters from any accessible surface beyond the plane of the image receptor supporting device does not exceed 25.8 nanocoulombs per kilogram (0.1 milliroentgen) for each activation of the tube. Exposure shall be measured with the system operated at the minimum SID for which it is designed. Compliance shall be determined at the maximum rated peak tube potential for the system and at the maximum rated product of tube current and exposure time (mAs) for that peak tube potential. Compliance shall be determined by measurements averaged over an area of 100 square centimeters with no linear dimension greater than 20 centimeters.

(n) Maximum glandular doses. Glandular tissue dose for a cranio-caudal view of a 4.5 cm compressed breast using dose calculation methods found in NCRP Report # 85 shall not exceed the following:

Screen-film:

No grid	=	1.5 milliGray (100 millirads)/projection
Grid	=	2.5 milliGray (300 millirads)/projection
Xerox	=	4.0 milliGray (400 millirads)/projection

(5) A quality control program shall be written and implemented for all mammographic facilities. This shall include (but shall not be limited to) tests performed, testing frequency, testing protocol, control limits for each test, corrective actions taken, and equipment maintenance/service. Program requirements include:

(a) Daily tests:

Film processor control charts using a sensitometric/densitometric based measurement system shall be required for each day the mammographic machine is in operation. Single emulsion mammographic film shall be used for this evaluation. The sensitometer shall be one with a 21-step optical attenuator.

Parameters in daily film processor tests shall include:

(i) Speed index (mid-density):

Control limits ± 0.15 optical density

(ii) Contrast index (density difference):

Control limits ± 0.15 optical density

(iii) Base + fog:

Maximum density shall not exceed 0.20 optical density.

(iv) Solution temperatures, using a digital thermometer that reads out in tenths of a degree and that is accurate to within ± 0.5°F.

Control limits ± 1.0 F

(b) Monthly tests:

(i) Chemical replenishment rates.

(ii) Image quality evaluation. The mammographic system shall be capable of providing an image of a 0.75 mm fiber, 0.32 mm speck group, and a 0.75 mm mass from an ACR, or equivalent, phantom on the standard mammographic image receptor system in use at the facility. Mammograms shall not be taken on patients if this minimum is not met. Any fibers, speck groups or masses larger than those specified shall also be imaged.

(c) Quarterly tests:

(i) Film/screen contact for all cassettes, using a 40-mesh copper screen.

(ii) Analyses of reject/repeat films.

(iii) Fixer retention in processed film.

(d) Semi-annual tests:

(i) Darkroom fog.

(ii) Compression device force.

(e) Yearly tests: See WAC 246-225-160 (4)(a).

(f) Cassette screens must be cleaned at least weekly.

(g) Records shall be maintained for quality control test equipment which requires calibration, and such calibrations shall be performed in accordance with recommendations of the manufacturer of the test equipment.

(h) Film processing. See WAC 246-225-150. A film processor that cannot be consistently made to operate within the control limits specified in (a) of this subsection shall not be used to process mammographic films.

(6) Operator competency:

(a) A mammographic machine operator shall be licensed, certified, or registered by the department as either:

(i) A health care practitioner, licensed under Title 18 RCW, if performing mammography is within the person's authorized scope of practice; or

(ii) A diagnostic radiologic technologist certified in accordance with chapter 18.84 RCW; or

(iii) An X-ray technician registered in accordance with chapter 18.84 RCW, with two or more years' experience in performing mammography and satisfactory completion of at least sixteen hours of training in mammographic positioning, mammographic quality assurance, and/or other related areas subject to approval by the department.

(b) A mammographic machine operator shall complete the equivalent of at least eight hours of training every twelve months covering such areas as mammographic positioning, mammographic quality assurance and other related areas subject to approval by the department.

(c) A mammographic machine operator shall meet the requirements of WAC 246-225-020 (2)(b) and 246-225-99920.

(7) Masking devices shall be made available to block extraneous light from the viewer's eye when the illuminated surface of the viewbox is larger than the exposed area on the film.

(8) Additional requirement for mobile mammography services:

The daily film processor performance testing required in subsection (5)(a) of this section shall apply to all film processors used by the mobile service. No processor shall be used unless it meets the control limits specified by subsection (5)(a)(i) through (iv) of this section.

[Statutory Authority: RCW 70.98.050. 94-01-073, § 246-225-160, filed 12/9/93, effective 1/9/94; 92-05-011 (Order 240), § 246-225-160, filed 2/7/92, effective 3/9/92.]

WAC 246-225-99920 Appendix II—Determination of competency. The following are areas in which the department considers it important that an individual have expertise for the competent operation of X-ray equipment.

(1) *Familiarization with equipment.*

(a) Identification of controls.

(b) Function of each control.

(c) The use of a technique chart.

(2) *Radiation protection.*

(a) Collimation.

(b) Filtration.

(c) Gonad shielding and other patient protection devices.

(d) Restriction of X-ray tube radiation to the image receptor.

(e) Personnel protection.

(f) Grids.

(3) *Film processing.*

(a) Film speed as relates to patient exposure.

(b) Film processing parameters.

(c) Quality assurance and quality control.

(4) *Emergency procedures.*

Termination of exposure in event of automatic timing device failure.

(5) *Proper use of personnel dosimetry, if required.*

(6) *Understanding units of radiation.*

[Statutory Authority: RCW 70.98.050 and 70.98.080. 91-15-083 (Order 183), § 246-225-99920, filed 7/23/91, effective 8/23/91. Statutory Authority: RCW 43.70.040. 91-02-049 (Order 121), recodified as § 246-225-99920, filed 12/27/90, effective 1/31/91. Statutory Authority: RCW 70.98.080. 83-19-050 (Order 2026), § 402-28-99003, filed 9/16/83; Order 1084, Appendix F (codified as WAC 402-28-99003), filed 1/14/76.]

WAC 246-225-99930 Appendix III—Information to be submitted by persons proposing to conduct healing arts screening using ionizing radiation. Persons requesting that the department approve a healing arts screening program shall submit the following information and evaluation:

(1) Name and address of the applicant and, where applicable, the names and addresses of agents within this state.

(2) Diseases or conditions and frequency for which the X-ray examinations are to be used.

(3) Description in detail of the X-ray examinations proposed in the screening program.

(4) Description of the population to be examined in the screening program, i.e., age, sex, physical condition, and other appropriate information.

(5) An evaluation of any known alternate methods not involving ionizing radiation which could achieve the goals of the screening program and why these methods are not used in preference to the X-ray examinations.

(6) An evaluation by a qualified expert of the X-ray system(s) to be used in the screening program. The evaluation by the qualified expert shall show that such system(s) satisfy all requirements of these regulations. The evaluation shall include a measurement of patient exposures from the X-ray examinations to be performed.

(7) A description of the diagnostic film quality control program.

(8) A copy of the technique chart for the X-ray examination procedures to be used.

(9) The qualifications of each individual who will be operating the X-ray system(s).

(10) The qualifications of the individual who will be supervising the operators of the X-ray system(s). The extent of supervision and the method of work performance evaluation shall be specified.

(11) The name and address of the individual who will interpret the radiograph(s).

(12) A description of the procedure to be used in advising the individuals screened and their private practitioners of the healing arts of the results of the screening procedure and any further medical needs indicated.

(13) A description of the procedures for the retention or disposition of the radiographs and other records pertaining to the X-ray examinations.

(14) An indication of the frequency of screening and the duration of the entire screening program.

[Statutory Authority: RCW 70.98.050 and 70.98.080. 91-15-083 (Order 183), § 246-225-99930, filed 7/23/91, effective 8/23/91. Statutory Authority: RCW 43.70.040. 91-02-049 (Order 121), recodified as § 246-225-99930, filed 12/27/90, effective 1/31/91. Statutory Authority: RCW 70.98.080. 83-19-050 (Order 2026), § 402-28-99004, filed 9/16/83. Statutory Authority: RCW 70.98.050. 81-01-011 (Order 1570), § 402-28-99004, filed 12/8/80.]

Chapter 246-225A WAC

RADIATION SAFETY AND DIAGNOSTIC IMAGE QUALITY STANDARDS FOR DENTAL FACILITIES

WAC

246-225A-001	Purpose and scope.
246-225A-010	Definitions.
246-225A-020	General requirements and administrative controls.
246-225A-025	X-ray system radiation safety procedure.
246-225A-026	Healing arts screening program.
246-225A-040	Dental X-ray rule variance request.
246-225A-050	Dental X-ray facility design.
246-225A-060	General requirements for all dental X-ray systems.
246-225A-070	Special requirements for dental extra-oral radiography.
246-225A-080	Special requirements for dental intra-oral radiography.
246-225A-090	X-ray image processing requirements.
246-225A-110	Image processing quality assurance.

WAC 246-225A-001 Purpose and scope. This chapter establishes facility design and operation requirements for the use of dental X-ray equipment according to chapter 70.98 RCW. The scope of this chapter pertains to dental intra-oral and extra-oral radiography and establishes radiation safety requirements for patients, dental employees, and the public;

and establishes optimal diagnostic image processing requirements.

[Statutory Authority: RCW 70.98.050 and 70.98.080. 08-14-074, § 246-225A-001, filed 6/26/08, effective 7/27/08.]

WAC 246-225A-010 Definitions. As used in this chapter, the following definitions apply:

"Barrier" (see "protective barrier").

"Beam" (see "X ray").

"Beam-limiting device," sometimes called a collimator or cone, means a device that controls the size of the X-ray field.

"Cephalometric" means X-ray imaging specific to the human head and jaw.

"Computed radiography (CR)" means creating an X-ray image using plates consisting of a special phosphor that when exposed to radiation and then processed by a scanner, provides the information to a computer for display and manipulation.

"Computed tomography (CT)" means creating a cross-sectional X-ray image generated by an X-ray source and detector moving around the patient's body.

"Control panel" means the part of the X-ray system where the switches, knobs, pushbuttons, and other hardware necessary to operate the X-ray system are located.

"Dead-man switch or button" means a switch designed so that it can only be operated by continuous pressure on the switch by the operator, and when released before the preset exposure time will stop the exposure.

"Department" means the department of health, which is the state radiation control agency under chapter 70.98 RCW.

"Detector" means a device capable of receiving and recording an X-ray image.

"Direct digital radiography (DR)" means creating an X-ray image by sending signals directly from a solid state detector to a computer for display and manipulation.

"Diagnostic source assembly" means the combination of the tube housing assembly and the collimator.

"Direct scattered radiation" means radiation discharged in a straight line from the object being radiographed.

"Exposure," as the context implies, means:

(a) The number of electrons, measured in coulombs per kilogram of air, released through the ionization of air molecules by electromagnetic radiation; and

(b) An occupational worker or patient being subjected to radiation either directly or indirectly.

"Extra-oral radiography" means creating a film or digital X-ray image on an image receptor placed outside the mouth. Examples include panoramic and cephalometric X rays.

"Filter" means material, such as copper or aluminum, placed in the useful beam of the X ray to block selected energies, and in a safelight to block light that could fog the X-ray film.

"Focal spot" means the area on the anode end of the X-ray tube bombarded by the electrons accelerated from the cathode and from which the useful X-ray beam begins.

"Grid" means a device placed between the patient and the image receptor in extra-oral radiography that reduces scattered radiation that would decrease the quality of the image being created.

"Half-value layer (HVL)" means the thickness of material that reduces the intensity of radiation to one-half of its original value.

"Healing arts screening" means using X-ray equipment without an order by a licensed practitioner on an individual who does not have a known or diagnosed disease or symptom to learn if the individual may have an indication of ill health.

"Image receptor" means a device that transforms an X-ray beam into a visible film or digital image.

"Intra-oral radiography" means creating a film or digital X-ray image on an image receptor placed inside the mouth.

"Kilovolt (kV)" means the unit used to measure electrical energy.

"Kilovolts peak (kVp)" means the highest possible voltage across the X-ray tube during an exposure (see also "peak tube potential").

"Leakage radiation" means radiation coming from the X-ray tube, other than the main X-ray beam.

"Leakage technique factors" means the technique factors associated with the tube housing assembly that are used to measure leakage radiation. They are defined as the maximum rated peak tube potential and the maximum rated continuous tube current at the maximum peak tube potential.

"Licensed practitioner" means an individual who holds a license to practice dentistry under chapter 18.32 RCW.

"Milliampere (mA)" means the unit used to measure electrical current in an X-ray tube.

"Milliampere second (mAs)" means the product of the electrical current in the X-ray tube in milliamperes and the time of exposure in seconds.

"Mobile equipment" (see "X-ray system").

"Operator" means a person working under the direction of a licensed practitioner to operate X-ray equipment and who has been properly trained according to WAC 246-225A-020.

"Operatory" means a room in which dental health care procedures are performed.

"Peak tube potential" means the maximum voltage in the X-ray tube during an exposure.

"Portable equipment" (see "X-ray equipment").

"Position-indicating device" means a device on X-ray equipment that shows where the X-ray beam will be directed and establishes the distance from the X-ray tube to the patient's body. The device may or may not incorporate or serve as a beam-limiting device.

"Primary beam" (see "useful beam").

"Primary protective barrier" means the material placed in the useful beam, beyond the patient and image receptor, to reduce remnant primary beam exposure.

"Protected area" means a space for X-ray equipment operators that is shielded so that X-ray exposures are reduced enough to meet the exposure limits of WAC 246-221-010 (Occupational dose limits for adults) and WAC 246-220-007 (Statement of philosophy). In addition, the space must have no exposure to direct scattered radiation.

"Protective apron" means a garment made of radiation absorbing materials used to reduce a person's radiation exposure.

"Protective barrier" means a structure made of radiation absorbing material used to reduce radiation exposure.

"Quality assurance" means a program designed to produce high quality X-ray images at minimal cost and with minimal patient exposure to radiation.

"Quality control" means the regular testing of X-ray equipment and associated equipment, such as processors, to verify that the equipment is working properly. Controls include performing routine tests of the diagnostic X-ray imaging system such as X-ray beam output, viewing X-ray test images, and continually adjusting the performance of the X-ray equipment and processor to an optimal and consistent level.

"Radiation safety" means ways to protect patients and staff from unnecessary radiation exposure. Safety measures may include patient exposure reduction, image quality improvement, diagnostic imaging system quality assurance, radiation measurements, dose evaluations, compliance with state and federal regulations, and related issues.

"Radiographic" means the production of an image created when an X-ray pattern exits an X-rayed object.

"Radiography" means a way of creating a permanent film or digital image using X rays.

"Recording" means creating a permanent image, on film or in a computer, from an X-ray exposure.

"Registrant" means the owner or controller of the radiation equipment who is responsible for the safe operation of the radiation equipment in accordance with this chapter and chapter 70.98 RCW.

"Registration" means providing required information and continuing contact with the department.

"Remnant primary beam" means the part of the useful beam that completely passes through the patient and image receptor.

"Safelight" means a lamp with a filter that is used in an X-ray darkroom to provide enough light to see, but not enough to over-expose the film.

"Scattered radiation" means radiation that has changed direction as it passes through matter (see also "direct scattered radiation").

"Secondary protective barrier" means an object or material sufficient to reduce stray radiation to the required degree as stated in chapter 246-221 WAC (Radiation protection standards).

"Source-to-image-receptor distance (SID)" means the distance from the focal spot in the X-ray tube to the center of the surface of the image receptor.

"Source" means the focal spot of the X-ray tube.

"Source-to-skin distance (SSD)" means the distance between the focal spot of the X-ray tube and the nearest point on the patient's skin where the primary beam enters.

"Stationary equipment" (see "X-ray system").

"Stray radiation" means the sum of leakage and scattered radiation.

"Technique chart" means a written instruction or guide that X-ray equipment operators use to determine which radiation technique factors to select for each type of radiographic examination.

"Technique factors" means the X-ray system settings selected for a given radiographic examination. They are specified as the peak tube potential in kilovolts and either:

(a) Tube current measured in milliamperes and exposure time in seconds or pulses; or

(b) The product of tube current and exposure time expressed in milliampere seconds.

"Tube" means a glass tube that produces an X ray when high-voltage electricity is passed between the cathode at one end and the anode at the other.

"Tube housing assembly" means the X-ray tube and its housing. It includes high-voltage and/or filament transformers and other appropriate elements when they are contained within the tube housing.

"Tube housing port" means the portion of the tube housing assembly that the X rays pass through.

"Useful beam" means the radiation that passes through the tube housing port and the opening of the beam-limiting device.

"Variance" means a department-authorized alternative to a requirement of this chapter.

"X ray" means a beam of ionizing radiation produced by a machine.

"X-ray control" means a device that controls how much electricity enters the X-ray high-voltage generator and/or the X-ray tube. It includes equipment that controls the technique factors for an exposure.

"X-ray equipment" means the entire X-ray system or parts of the system.

"X-ray exposure switch or button" means the part of the X-ray system that when engaged generates the production of an X ray. (See also "dead-man switch or button.")

"X-ray high-voltage generator" means a device that supplies electrical energy to the X-ray tube to create an X-ray beam.

"X-ray system" means all of the components of a machine used for the controlled production of X rays. It includes minimally an X-ray high-voltage generator, an X-ray control, a tube housing assembly, a beam-limiting device, and the necessary supporting structures. Additional components which function with the system, such as the image receptor, are considered integral parts of the system. Types of X-ray systems are:

(a) "Mobile" means X-ray equipment mounted on a permanent base with wheels and/or casters for moving the X-ray equipment fully assembled. It is intended to be taken from one geographical location to another or from one room to another.

(b) "Portable" means X-ray equipment designed to be hand-carried, but not hand-held during use.

(c) "Stationary" means X-ray equipment that is installed in a fixed location, such as bolted to a floor or wall.

"X-ray tube" means any electron tube which is designed to be used primarily for the production of X rays.

[Statutory Authority: RCW 70.98.050 and 70.98.080. 08-14-074, § 246-225A-010, filed 6/26/08, effective 7/27/08.]

WAC 246-225A-020 General requirements and administrative controls. The registrant is responsible for directing the operation of the X-ray system and assuring the provisions of WAC 246-222 (Radiation protection—Worker rights) are met. In addition, the registrant shall:

(1) Verify that any operator of the X-ray equipment is trained and able to show that he or she can correctly and safely operate the X-ray equipment used by the registrant.

The department may determine compliance by observation, interview, and/or testing in these subject areas:

(a) Knowledge of the X-ray system controls and their function;

(b) Knowledge of radiation safety and shielding methods for both operators and patients;

(c) Proper image processing.

(2) Post a technique chart at each X-ray system's control panel that specifies the following information for the examinations being performed by that system:

(a) Patient's teeth, jaw, or head anatomy versus technique factors to be used;

(b) If applicable, settings for automatic exposure devices; and

(c) The type and size of screen-film combination or other imaging system to be used.

(3) Require that all individuals, other than the patient being examined:

(a) Be positioned so that no part of the body, including the extremities, will be struck by the useful beam;

(b) Be protected from stray radiation by wearing protective aprons or by being positioned behind protective barriers of not less than 0.25 millimeters lead equivalent; and

(c) Not be present in the room during the X-ray exposure, except as described in subsection (4)(b) of this section.

(4) Use mechanical holding devices when a patient, film, or image receptor needs to be supported during an X-ray exposure when the technique permits.

(a) No individual shall be allowed to routinely hold a patient, film, or image receptor; and

(b) Holding a patient, film, or image receptor shall only be allowed in very unusual and rare situations. In these cases the patient's name, the date, and the name of the person holding the patient must be recorded in writing and maintained by the registrant for at least five years.

(5) Comply with the occupational exposure limits and the requirements for the determination of prior occupational dose stated under WAC 246-221-020 (Determination of prior occupational dose) for all individuals associated with the operation of the registrant's X-ray system. In addition, when protective clothing or devices are worn on portions of the body and a dosimeter is required, at least one dosimeter shall be used and documented as follows:

(a) When an apron is worn, the dosimeter shall be worn at the collar outside the apron;

(b) The dose to the whole body based on the maximum dose attributed to the most critical organ must be recorded on the reports required under WAC 246-221-230 (Records important to radiation safety). If more than one dosimeter is worn, each dose must be identified with the area where the dosimeter was worn on the body.

(6) Require personnel dosimetry monitoring of an operator when:

(a) Mobile or portable X-ray systems are used, i.e., when X-ray exposure buttons or X-ray exposure switch cords are used that allow the operator to stand in an unprotected area during exposures; or

(b) Measurements by the department show ten percent of the exposure limits as specified under WAC 246-221-010 (Occupational dose limits for adults) are exceeded.

(7) Use only X-ray equipment, and the accessories used in connection with making X rays, that meet the requirements of this chapter.

(8) Not allow anyone in the dental office to operate X-ray equipment for diagnostic purposes when the X-ray equipment:

(a) Does not meet the provisions of this chapter; or

(b) Is malfunctioning or threatens the health or safety of a patient, dental employee, or the public.

(9) Not allow patients to be exposed to the useful X-ray beam except for healing arts purposes. Only a licensed practitioner may authorize an exposure to the useful beam. Deliberate exposure of an individual for the following purposes is prohibited:

(a) Training, demonstration, or other purposes unless there are also healing arts requirements and proper prescription provided; or

(b) Except for exposure required under medicare provisions, any exposure for which the sole purpose is satisfying a third party's prerequisite for reimbursement under any health care plan.

[Statutory Authority: RCW 70.98.050 and 70.98.080. 08-14-074, § 246-225A-020, filed 6/26/08, effective 7/27/08.]

WAC 246-225A-025 X-ray system radiation safety procedure. If required by the department, the registrant shall adopt a written X-ray system radiation safety procedure.

(1) The department may require an X-ray system radiation safety procedure if there is reason to believe the registrant needs increased attention because of:

(a) Poor operator staff training;

(b) Extremely high workload;

(c) Increased risk of exposure due to staff supporting patients during radiography;

(d) Increased risk of exposure to scattered radiation;

(e) Unnecessarily high patient exposure values; or

(f) Other similar conditions.

(2) The X-ray system radiation safety procedures shall:

(a) Address patient and occupationally exposed personnel safety; and

(b) Define any restrictions of the operating technique required for safe operation of the X-ray system.

[Statutory Authority: RCW 70.98.050 and 70.98.080. 08-14-074, § 246-225A-025, filed 6/26/08, effective 7/27/08.]

WAC 246-225A-026 Healing arts screening program. Any individual proposing to conduct a healing arts screening program shall obtain approval from the state health officer as required in WAC 246-225-99930 before conducting the screening program.

[Statutory Authority: RCW 70.98.050 and 70.98.080. 08-14-074, § 246-225A-026, filed 6/26/08, effective 7/27/08.]

WAC 246-225A-040 Dental X-ray rule variance request. A registrant may submit a written request to the department for a variance from the applicable regulations. The registrant shall not use X-ray equipment on patients until the department approves the variance request.

(1) The written request shall be addressed to: X-ray Supervisor, Office of Radiation Protection, Department of

Health, P.O. Box 47827, Olympia, Washington 98504-7827, and must include:

(a) The specific WAC reference or references of the rule for which the variance is requested;

(b) An explanation of the circumstances involved, and the reason why the rule cannot be followed;

(c) A description of how the proposed alternative meets the intent of the rule and how the registrant shall protect patients, dental employees, and the public;

(d) A description of the X-ray system to be used with supporting pictures or documents; and

(e) The time period for which the variance is requested.

(2) The department may impose conditions that may be necessary to protect human health and safety during the term of the variance.

(3) If necessary, the department may require the registrant to submit additional information.

(4) The department may conduct an on-site variance inspection to verify the information provided or if it determines that an inspection is necessary.

(5) As determined by the department, variances can be permanent or temporary.

(6) The department may at any time revoke a variance if it is determined that the conditions of the variance are not being followed.

[Statutory Authority: RCW 70.98.050 and 70.98.080. 08-14-074, § 246-225A-040, filed 6/26/08, effective 7/27/08.]

WAC 246-225A-050 Dental X-ray facility design. All registrants proposing to use X-ray equipment designed to produce computed tomography images using a "ring detector" type CT, or where medical X-ray systems are used for dental imaging, shall submit shielding and floor plans to the department for review. The submittal shall be based on the criteria and methods found in National Council on Radiation Protection and Measurements (NCRP) report #147, issued November 19, 2004. The intent of this requirement is to assure protection of patients, dental employees, and the public. A copy of this report is available for review at Department of Health, Office of Radiation Protection, 111 Israel Road S.E., Tumwater, Washington. Shielding and floor plans shall meet the following requirements:

(1) Each X-ray exposure switch or button shall be located to meet the following criteria:

(a) For stationary X-ray systems, the X-ray exposure switch or button shall be permanently mounted in a protected area (such as a corridor outside the room) so that the operator can make an exposure only from the protected area; and

(b) Mobile X-ray systems shall have an X-ray exposure switch or button located at the end of a cord at least twelve feet (3.7 meters) long.

(2) Shielding for cephalometric X ray shall meet the following criteria:

(a) Be at least one foot (30.5 centimeters) larger, in both the horizontal and vertical directions, than the area of the primary beam where it strikes the nearest wall; and

(b) Shielding between the nearest wall struck by the primary beam and the next occupied area shall have two-pound lead or equivalent installed in the wall (based on 20 films per week). Exterior walls or concrete block walls need no additional shielding.

(3) Acceptable shielding materials for dental X-ray facilities are as follows:

(a) The minimum shielding for intra-oral stray radiation protection is standard gypsum wallboard/sheetrock construction (two layers each of five-eighths inch thickness).

(b) Where windows are provided to observe patients during radiography, the windows are at least one-half inch plate glass, or equivalent ability to reduce exposure.

(c) All other materials used for shielding between operatories and for operator protection areas are equivalent to 0.2 millimeters of lead.

(4) Barriers between dental X-ray rooms and dental operatories where intra-oral X-ray equipment is installed shall meet the following criteria:

(a) Be at least six feet (1.83 meters) high and composed of materials capable of reducing scattered radiation as required under subsection (3) of this section;

(b) There shall be no line of sight between workers or patients in one operatory and the X-ray tube housing assembly in the next operatory when that X-ray tube housing assembly is in its operating position;

(c) X-ray tube housing assemblies shall not be mounted between operatories on top of barriers less than six feet (1.83 meters) high, unless those barriers are at the foot end of the patient couches, and there is no line of sight between operatories.

[Statutory Authority: RCW 70.98.050 and 70.98.080. 08-14-074, § 246-225A-050, filed 6/26/08, effective 7/27/08.]

WAC 246-225A-060 General requirements for all dental X-ray systems. Registrants shall use only dental X-ray systems and medical X-ray systems for dental imaging that meet the following requirements:

(1) The leakage radiation from the tube housing assembly, measured at a distance of one meter in any direction from the source, shall not exceed 100 milliroentgens in one hour when the X-ray tube is operated at its leakage technique factors. The department will determine compliance by measuring leakage averaged over an area of 100 square centimeters with no dimension of that area greater than 20 centimeters.

(2) The half-value layer of the useful beam for a given X-ray tube potential shall not be less than the values shown in Table 1 of this section. To determine a half-value layer at an X-ray tube potential which is not listed in Table 1 of this section, linear interpolation or extrapolation may be made.

Table 1

Design operating range (kilovolts peak)	Measured potential (kilovolts peak)	Half-value layer (millimeters of aluminum equivalent)
70 and below	70 and below	1.5
Above 70	71	2.1
	80	2.3
	90	2.5
	100	2.7

(3) If two or more X-ray tubes are controlled by one X-ray exposure switch or button, the tube or tubes in operation shall be clearly marked before an exposure, on both the X-ray

control panel and near or on the selected tube housing assembly.

(4) The tube housing assembly supports shall be adjusted so that the tube housing assembly remains stable and does not drift during an exposure unless the tube housing movement during exposure is a designed function of the X-ray system. The X-ray system and/or tube housing assembly shall not be hand-held during exposure.

(5) Each X-ray control shall have a dead-man switch or button.

(6) Technique indicators shall be set as follows:

(a) All exposure technique factors shall be set on the control panel before the exposure begins, except when automatic exposure controls are used. When automatic exposure controls are used, any preselected settings for each exposure shall be indicated.

(b) On equipment having fixed technique factors, the requirement in (a) of this subsection may be met by permanent markings or labels.

(7) Linearity shall be measured as follows:

(a) The difference between the ratio of milliroentgens (mR) exposure to milliampere second (mAs) at one milliampere (mA) or mAs setting and the ratio of mR exposure to milliampere second (mAs) at another milliampere (mA) or mAs setting must not exceed 0.1 times the sum of the ratios. This is written as:

$$X_1 - X_2 \leq 0.10\ (X_1 + X_2)$$

Where X1 and X2 are the ratios (mR/mAs) for each mA or mAs setting.

(b) The measurement shall be performed at any selection of mA or mAs without regard to focal spot size, provided neither focal spot size is less than 0.45 millimeters.

(8) When four exposures are made at identical operating settings, the difference between the maximum exposure (Emax) and the minimum exposure (Emin) must be less than or equal to ten percent of the average exposure (E). This is written as:

$$(Emax - Emin) \leq 0.1E$$

(9) The difference between the kVp indicated on an X-ray system and the measured kVp shall not be greater than ten percent of the indicated kVp.

(10) Timers shall be able to:

(a) Stop the exposure at a preset time interval, a preset product of current and time, a preset number of pulses, or a preset radiation exposure to the image receptor; and

(b) Reset automatically to the initial setting or to zero when the exposure is stopped.

(11) X-ray equipment shall not be operated when the timer is set to the zero or off position if either position is provided.

(12) Each X-ray control shall have a visual indicator (such as a light) or audible signal so that the operator knows that X rays are being produced or the exposure is occurring or has ended.

(13) Registrants shall not use dental fluoroscopy without electronic amplification.

[Statutory Authority: RCW 70.98.050 and 70.98.080. 08-14-074, § 246-225A-060, filed 6/26/08, effective 7/27/08.]

WAC 246-225A-070 Special requirements for dental extra-oral radiography. Registrants shall use X-ray systems for extra-oral radiography that meet the following requirements for:

(1) Beam limitation.

(a) X-ray equipment designed for only one image receptor size at a fixed source-to-image-receptor distance (SID) shall be able to limit the size of the beam at the plane of the image receptor to no larger than the image receptor, and to align the center of the X-ray beam with the center of the image receptor to within two percent of the SID. In the case of extra-oral imaging systems where the image receptor can be turned vertically or horizontally, the beam-limiting device must also be able to be turned so that the dimensions of the beam match the image receptor dimensions at the image receptor plane.

(b) Intra-oral radiography systems used to perform cephalometric projections, including trans-cranial exams, must be equipped with a stable means to:

(i) Set the source-to-skin distance;

(ii) Comply with the beam size dimensions in subsection (1)(a) of this section; and

(iii) Center the beam to the image receptor as required in subsection (1)(a) of this section.

(c) General purpose medical X-ray equipment used to perform cephalometric exams must:

(i) Have stepless adjustment of the dimensions of the X-ray beam so that the width and height of the X-ray beam are independently adjustable. The minimum beam size at a SID of 100 centimeters must be equal to or less than 10 by 10 centimeters.

(ii) Have a means for operators to visually set the width and height of the X-ray beam. The misalignment of the edges of the visually set light field with the respective edges of the X-ray beam along either the length or width of the visually set light field must not be more than two percent of the distance from the source to the center of the visually defined light field when the surface upon which it appears is perpendicular (at a 90 degree angle) to the central axis of the X-ray beam.

(iii) Have a way to indicate on the X-ray equipment when the axis of the X-ray beam is perpendicular to the plane of the image receptor and to align the center of the X-ray beam to the center of the image receptor to within two percent of the SID (five percent for equipment manufactured before August 1974). Dental lateral jaw examinations are excluded from this requirement.

(iv) Have a beam-limiting device that shows the X-ray beam size in centimeters or inches at the plane of the image receptor to which the beam-limiting device is adjusted.

(v) Have beam size dimension settings that are able to produce X-ray beam dimensions at the plane of the image receptor to within two percent of the SID when the beam axis is perpendicular to the plane of the image receptor.

(vi) Have SID displayed in inches and/or centimeters.

(2) Source-to-skin distance.

(a) Dental extra-oral radiography systems must have a durable, securely fastened means to limit the source-to-skin distance to not less than 23 centimeters. The requirement may be met when the beam-limiting device provides the required limits.

(b) Dental extra-oral radiography systems in which the SID is not fixed must have a device or reference that will indicate the actual SID distance to within two percent of the indicated SID.

(3) Viewing device.

Dental extra-oral radiography installations must provide a viewing device (mirror or glass window or video designed to reduce exposure) so that operators of the X-ray equipment may observe the patient during the exposure without being exposed to the primary beam or stray radiation.

(4) Scattered radiation suppressing grids.

When using scattered radiation suppressing grids, the grids shall be:

(a) Clearly labeled with the SID for which the grids are designed to be used; and

(b) Used at the proper SID.

[Statutory Authority: RCW 70.98.050 and 70.98.080. 08-14-074, § 246-225A-070, filed 6/26/08, effective 7/27/08.]

WAC 246-225A-080 Special requirements for dental intra-oral radiography. (1) Registrants using an X-ray system designed for use with an intra-oral image receptor shall use equipment that:

(a) Limits the source-to-skin distance to not less than 18 centimeters;

(b) Limits the X-ray beam so that the beam diameter at the minimum SSD is no greater than 7 centimeters in diameter;

(c) Has an open-ended position-indicating device; and

(d) Has shielding included in the beam-limiting device or position-indicating device equivalent to that required for the diagnostic source assembly under WAC 246-225A-060(1).

(2) After January 1, 2010, registrants shall not use diagnostic dental X-ray systems with a fixed, nominal kilovolts peak of less than 55.

[Statutory Authority: RCW 70.98.050 and 70.98.080. 08-14-074, § 246-225A-080, filed 6/26/08, effective 7/27/08.]

WAC 246-225A-090 X-ray image processing requirements. Standards in this section are designed to assure that optimal X-ray image quality and diagnostic information are produced so that fewer retakes are needed, and associated patient and operator exposure are minimal.

(1) When performing manual film processing, also known as hand tank processing, registrants or an operator working under the registrant's direction shall:

(a) Use appropriate chemicals for manual film processing as indicated in chemical and film manufacturer's labels and recommendations.

(b) Mix chemicals in accordance with the chemical manufacturer's recommendations.

(c) Periodically add film developer/fixer replenisher based on the recommendations of the chemical or film manufacturer. Solution may be removed from the tank to permit the addition of an adequate volume of replenisher.

(d) Completely replace all manual processing chemicals at least every two months, or follow the manufacturer's recommendations for periodic chemistry replenishment and maintenance, whichever is shorter.

(e) Post and keep the most recent twelve months of a log that shows when each chemistry change was done and by whom for department inspection.

(f) Process film to achieve the best image quality by either:

(i) Following the film manufacturer's published temperature and time recommendations for X-ray film development; or

(ii) Developing film according to the temperature-time chart in (g) of this subsection.

(g) For standard developer solution, follow the X-ray film developing time specified for the appropriate developer solution temperature in Table 1 of this section:

Table 1

THERMOMETER READINGS (DEGREES)		MINIMUM DEVELOPING TIMES (MINUTES)
C	F	
27	80	2
	79	2
	78	2 1/2
	77	2 1/2
24	76	3
	75	3
	74	3 1/2
	73	3 1/2
22	72	4
	71	4
	70	4 1/2
	69	4 1/2
20	68	5
	67	5 1/2
	66	5 1/2
	65	6
18	64	6 1/2
	63	7
	62	8
	61	8 1/2
16	60	9 1/2

(h) Use X-ray film developing devices that give:

(i) The actual temperature of the developer solution;

(ii) The developing time in minutes and seconds; and

(iii) An audible or visible signal when developing is complete.

(2) When performing automatic film processing, registrants or an operator working under the registrant's direction shall:

(a) Set up and maintain automatic film processors so that X-ray image density and contrast are optimal;

(b) Follow the film manufacturer's published specifications for time and temperature, and the processor manufacturer's recommendations for type of developer chemistry used. If manufacturer's specifications are not available, the film must be developed using the developer temperatures and immersion times specified in Table 2 of this section:

Table 2

DEVELOPER TEMPERATURE °C	°F	PROCESSOR DEVELOPER IMMERSION TIME* Seconds
35	95	20
34.5	94	21
34	93	22
33.5	92	23
33	91	24
32	90	25
31.5	89	26
31	88	27
30.5	87	28
30	86	29
29.5	85	30

*Immersion time only, no cross-over time included.

(c) Replenish the developer chemistry to create optimal X-ray images by:

(i) Replacing all automatic processor chemicals at least every month, or follow the manufacturer's recommendations for periodic chemistry replenishment and maintenance, whichever is shorter.

(ii) Posting and maintaining a log that shows when each chemistry change was performed and by whom. The most recent twelve months of the log shall be kept for department inspection.

(iii) Verifying that the processor delivers an adequate rate of developer replenishment; and

(iv) Verifying that standby replenishment, flood replenishment, or prefixed film processing is done periodically as necessary for facilities with a low X-ray workload.

(3) When developing film, registrants or an operator working under the registrant's direction shall:

(a) Set up darkrooms and daylight film loaders so that film being processed, handled, or stored will be exposed only to light passed through a safelight filter. The filter must be of the type specified by the film manufacturer and must not cause excess fog (evidence of light exposure) on X-ray-exposed film. Fog greater than 0.1 optical density is considered unacceptable.

(b) Use bulbs in the darkroom's safelight of fifteen watts or less.

(c) Mount the safelight in the darkroom at least four feet (1.2 meters) above work areas.

(d) Use daylight loaders in darkened areas or where light is dimmed so that the fog standard in (a) of this subsection is met.

(4) When processing digital images, registrants or an operator working under the registrant's direction shall:

(a) Follow the computed radiography (CR) and direct digital radiography (DR) sensor or detector manufacturer's recommendations to achieve adequate diagnostic image quality for the least possible patient exposure.

(b) Process CR phosphor plates using the longest processing time recommended by the manufacturer of the plate processor.

(5) The department may make X-ray film development and darkroom tests as necessary to determine compliance with this section.

[Statutory Authority: RCW 70.98.050 and 70.98.080. 08-14-074, § 246-225A-090, filed 6/26/08, effective 7/27/08.]

WAC 246-225A-110 Image processing quality assurance. Beginning January 1, 2010, registrants making images on film shall comply with the following quality assurance requirements for X-ray image processing:

(1) Conduct an acceptable quality assurance program that includes weekly tests of manual and automatic film processing to include:

(a) Density and contrast on test films; and

(b) Action taken when test film density or contrast falls below 15 percent of initial reference levels.

(2) Keep a written or computer log of all periodic quality assurance testing covered in subsection (1) of this section, including test films, from the proceeding twelve months for inspection by the department.

[Statutory Authority: RCW 70.98.050 and 70.98.080. 08-14-074, § 246-225A-110, filed 6/26/08, effective 7/27/08.]

Chapter 246-227 WAC

RADIATION PROTECTION—INDUSTRIAL X RAY

WAC

246-227-001 Purpose.
246-227-020 Definitions.
246-227-040 Radiation survey instruments.
246-227-050 Utilization and survey records.
246-227-060 Limitations—Personal radiation safety requirements for radiographers and radiographer's assistants.
246-227-070 Operating and emergency procedures.
246-227-080 Personnel monitoring control.
246-227-090 Security—Precautionary procedures in radiographic operations.
246-227-095 Posting.
246-227-120 Other records required.
246-227-130 Special requirements for enclosed radiography.
246-227-150 Special requirements for permanent radiographic installation.
246-227-170 Appendix A—Minimum subjects to be covered in training radiographers.

DISPOSITION OF SECTIONS FORMERLY CODIFIED IN THIS CHAPTER

246-227-010 Scope. [Statutory Authority: RCW 70.98.050. 94-01-073, § 246-227-010, filed 12/9/93, effective 1/9/94.] Repealed by 97-20-101, filed 9/29/97, effective 10/30/97. Statutory Authority: RCW 43.70.040.

WAC 246-227-001 Purpose. The regulations in this chapter establish radiation safety requirements for persons utilizing X-ray machines for industrial radiography. The requirements of this part are in addition to and not in substitution for the other requirements of these regulations.

[Statutory Authority: RCW 70.98.050. 94-01-073, § 246-227-001, filed 12/9/93, effective 1/9/94.]

WAC 246-227-020 Definitions. As used in this part:

(1) "Enclosed radiography" means industrial radiography employing radiation machines conducted in an enclosed cabinet or room and includes cabinet radiography and shielded room radiography.

(a) "Cabinet radiography" means industrial radiography employing radiation machines conducted in an enclosure or cabinet so shielded that every location at the exterior of the

enclosure or cabinet meets the condition specified in WAC 246-221-060.

"Cabinet X-ray system" means an X-ray system with the X-ray tube installed in an enclosure (hereinafter termed "cabinet") which, independently of existing architectural structure except the floor on which it may be placed, is intended to contain at least that portion of a material being irradiated, provide radiation attenuation, and exclude personnel from its interior during generation of x-radiation. Included are all X-ray systems designed primarily for the inspection of carry-on baggage at airline, railroad, and bus terminals, and in similar facilities. An X-ray tube used within a shielded part of a building, or X-ray equipment which may temporarily or occasionally incorporate portable shielding is not considered a cabinet X-ray system.

(b) "Shielded-room radiography" means industrial radiography conducted in a room so shielded that every location on the exterior of the room meets the conditions specified in WAC 246-221-060.

(2) "Industrial radiography" means the examination of the macroscopic structure of materials by nondestructive methods utilizing X-ray machines. Industrial radiography as used in this chapter does not include well logging operations.

(3) "Permanent radiographic installation" means an installation in which the shielding is an integral part to the building structure, such that the radiographic operations conducted there are not mobile and not temporary.

(4) "Personal supervision" means supervision by a radiographer such that the radiographer is physically present at the radiography site and in such proximity that communication can be maintained and immediate assistance given as required.

(5) "Radiographer" means any individual who performs or who, in attendance at the site where X-ray machines are being used, personally supervises industrial radiographic operations and who is responsible to the registrant for assuring compliance with the requirements of these regulations.

(6) "Radiographer's assistant" means any individual who, under the personal supervision of a radiographer, uses radiation machines, or radiation survey instruments in industrial radiography.

[Statutory Authority: RCW 70.98.050. 94-01-073, § 246-227-020, filed 12/9/93, effective 1/9/94.]

WAC 246-227-040 Radiation survey instruments. (1) The registrant shall maintain sufficient calibrated and operable radiation survey instruments to make physical radiation surveys as required by this part and chapter 246-221 WAC. Instrumentation required by this section shall have a range such that two milliroentgens per hour through one roentgen per hour can be measured.

(2) Each radiation survey instrument shall be calibrated:

(a) At energies appropriate for use and at intervals not to exceed three months and after each instrument servicing;

(b) Such that accuracy within ± twenty percent traceable to a national standard can be demonstrated; and

(c) At two or more widely separated points, other than zero, on each scale.

(3) Records of these calibrations shall be maintained for three years after the most recent calibration date.

(4) The requirements of this section do not apply to registrants using only radiation machines in enclosed radiographic systems.

[Statutory Authority: RCW 70.98.050. 94-01-073, § 246-227-040, filed 12/9/93, effective 1/9/94.]

WAC 246-227-050 Utilization and survey records. (1) Each registrant shall maintain records of the following information for three years after the date of each radiographic operation and shall maintain these records for inspection by the department:

(a) A description (or make and model number) of the radiation machine used along with the techniques utilized for each job;

(b) The identity of the radiographer and radiographer's assistant performing the work;

(c) Locations where used and dates of use;

(d) A physical radiation survey made of the boundary of the restricted area during radiographic operations. The maximum reading at the boundary shall be recorded. The records shall indicate approximate distance from source to boundaries and any occupied areas with exposure levels greater than 2 mR in any hour during radiographic operations; and

(e) The model and serial number of the survey meter used in (d) of this subsection.

(2) The requirements of subsection (1) of this section shall not apply in industrial radiography utilizing radiation machines in enclosed interlocked cabinets or rooms which are not occupied during radiographic operations, which are equipped with interlocks such that the radiation machine will not operate unless all openings are securely closed and which is so shielded that every location on the exterior meets conditions for an unrestricted area, as specified in WAC 246-221-060.

[Statutory Authority: RCW 70.98.050. 94-01-073, § 246-227-050, filed 12/9/93, effective 1/9/94.]

WAC 246-227-060 Limitations—Personal radiation safety requirements for radiographers and radiographer's assistants. (1) No registrant shall permit any individual to act as a radiographer as defined in this chapter until such individual:

(a) Has been instructed in the subjects outlined in WAC 246-227-170;

(b) Has received copies of and instruction in the regulations contained in chapters 246-220, 246-222, 246-221 and 246-227 WAC, and the registrant's operating and emergency procedures, and shall have demonstrated understanding thereof;

(c) Has demonstrated competence to use the radiation machine and the radiation survey instruments which will be employed in the individual's assignment; and

(d) Has demonstrated understanding of the instructions in this paragraph by successful completion of written test or oral test on the subjects covered.

(2) No registrant shall permit any individual to act as a radiographer's assistant as defined in this part until such individual:

(a) Has received copies of an instruction in the registrant's operating and emergency procedures;

(b) Has demonstrated competence to use, under the personal supervision of the radiographer, the radiation survey instruments which will be employed in the individual's assignment;

(c) Has demonstrated understanding of the instructions in this paragraph by successfully completing a written or oral test.

(3) Each registrant shall maintain records of training and testing which demonstrate that the requirements of subsections (1) and (2) of this section are met. These records shall be retained for at least one year following termination of employment.

(4) When a radiographer's assistant is using an X-ray machine, the radiographer shall maintain direct surveillance.

[Statutory Authority: RCW 70.98.050. 94-01-073, § 246-227-060, filed 12/9/93, effective 1/9/94.]

WAC 246-227-070 Operating and emergency procedures. The registrant's operating and emergency procedures shall include instructions in at least the following:

(1) The handling and use of radiation machines to be employed such that no individual is likely to be exposed to radiation doses in excess of the limits established in chapter 246-221 WAC;

(2) Methods and occasions for conducting radiation surveys;

(3) Methods for controlling access to radiographic areas;

(4) Methods and occasions for locking or securing radiation machines;

(5) Personnel monitoring and the use of personnel monitoring equipment including steps that must be taken immediately by radiography personnel in the event a pocket dosimeter is found to be off-scale;

(6) The procedure for notifying proper personnel in the event of a theft, loss, overexposure or accident involving a radiation machine; and

(7) Maintenance of records.

[Statutory Authority: RCW 70.98.050. 94-01-073, § 246-227-070, filed 12/9/93, effective 1/9/94.]

WAC 246-227-080 Personnel monitoring control. (1) No registrant shall permit any individual to act as a radiographer or as a radiographer's assistant unless, at all times during radiographic operations, each such individual shall wear a film or TLD badge and a direct reading pocket dosimeter. Pocket dosimeters shall be capable of measuring exposures from zero to at least two hundred milliroentgens. A film or TLD badge shall be assigned to and worn by only one individual.

(2) Pocket dosimeters shall be read and doses recorded daily. Pocket dosimeters shall be charged at the beginning of each working day. Pocket dosimeters shall be checked at least annually for correct response to radiation. Acceptable dosimeters shall read within ± thirty percent of the true radiation exposure. A film or TLD badge shall be immediately processed if a pocket dosimeter is discharged beyond its range during normal use. The film or TLD badge reports received from the film or TLD badge processor and records of pocket dosimeter readings shall be maintained until the department authorizes their disposal.

(3) The requirements for use of pocket dosimeter or pocket chamber shall not apply in industrial radiography utilizing radiation machines in enclosed interlocked cabinets or rooms which are not occupied during radiographic operations, which are equipped with interlocks such that the radiation machine will not operate unless all openings are securely closed and which are so shielded that every location on the exterior meets conditions for an unrestricted area, as specified in WAC 246-221-060.

(4) The requirement for film badges or TLDs do not apply to those users of cabinet X-ray systems which do not allow human access and which meet the requirements of WAC 246-227-130.

[Statutory Authority: RCW 70.98.050. 94-01-073, § 246-227-080, filed 12/9/93, effective 1/9/94.]

WAC 246-227-090 Security—Precautionary procedures in radiographic operations. (1) During each radiographic operation, the radiographer or radiographer's assistant shall maintain a direct surveillance of the operation to protect against unauthorized entry into a high radiation area, as defined in chapter 246-220 WAC except:

(a) Where the high radiation area is equipped with a control device or alarm system as described in WAC 246-221-120 (1)(e)(ii); or

(b) Where the high radiation area is locked to protect against unauthorized or accidental entry.

(2) When not in operation or when not under direct surveillance, radiation machines shall be secured to prevent use by unauthorized personnel.

[Statutory Authority: RCW 70.98.050. 94-01-073, § 246-227-090, filed 12/9/93, effective 1/9/94.]

WAC 246-227-095 Posting. Notwithstanding any provisions in WAC 246-221-130, areas in which radiography is being performed shall be conspicuously posted and access to the area shall be controlled as required by WAC 246-221-120. This requirement shall not apply to areas using enclosed radiography systems (cabinets) which do not allow human access and in which the requirements of WAC 246-221-060 are met at the surface of the cabinet.

[Statutory Authority: RCW 70.98.050. 94-01-073, § 246-227-095, filed 12/9/93, effective 1/9/94.]

WAC 246-227-120 Other records required. Each registrant conducting industrial radiography shall have the following documents, where applicable, available on site for inspection by the department:

(1) Operating and emergency procedures;

(2) Applicable regulations;

(3) Survey records required pursuant to WAC 246-227-050;

(4) Daily pocket dosimeter records for the period of operation at the site pursuant to WAC 246-227-080; and

(5) Proof of the latest calibration for specific instruments in use at the site pursuant to WAC 246-227-040.

[Statutory Authority: RCW 70.98.050. 94-01-073, § 246-227-120, filed 12/9/93, effective 1/9/94.]

WAC 246-227-130 Special requirements for enclosed radiography. (1) Shielded room radiography systems and cabinet systems shall:

(a) Comply with all applicable requirements of this chapter and WAC 246-221-060;

(b) Be interlocked such that the exposure will terminate if a door or port accessible to individuals is opened during the exposure, except for those systems employing conveyor belts or sample ports; and

(c) Be tested for the proper operation of interlocks, high radiation area control devices or alarm systems, where applicable, at the beginning of each day of use. The results of these tests shall be recorded and maintained for three years.

(2) The registrant shall perform an evaluation, at intervals not to exceed one year, to determine conformance with this chapter and WAC 246-221-060. Records of each evaluation shall be maintained for three years.

[Statutory Authority: RCW 70.98.050. 94-01-073, § 246-227-130, filed 12/9/93, effective 1/9/94.]

WAC 246-227-150 Special requirements for permanent radiographic installation. Permanent radiographic installations having high radiation area entrance controls of the types described in WAC 246-221-102(1) or where the high radiation area is locked to protect against unauthorized or accidental entry, shall also meet the following special requirements:

(1) Each entrance that is used for personnel access to the high radiation area in a permanent radiographic installation to which this section applies shall have both visible and audible warning signals to warn of the presence of radiation. The visible signal shall be actuated by radiation whenever the x-rays are exposed. The audible signal shall be actuated when an attempt is made to enter the installation while x-rays are being generated.

(2) Both visible and audible alarm systems are required and shall be tested prior to the first use of a source in the installation and thereafter at intervals not to exceed three months. Records of the tests shall be kept for three years.

(3) The department shall review and approve, in advance of construction, plans for permanent radiographic installations whose construction had not commenced by the effective date of these regulations. Construction of the permanent facility shall be in accordance with the plans approved by the department.

(4) A physical radiation survey shall be conducted and results recorded following construction or major modification of the facility to be used in the installation. Radiography shall not be conducted if exposure levels in unrestricted areas are greater than 2mR in any hour. Any increase in output capability of radiation machines will require resurvey of the installation prior to the conduct of industrial radiography.

[Statutory Authority: RCW 70.98.050. 94-01-073, § 246-227-150, filed 12/9/93, effective 1/9/94.]

WAC 246-227-170 Appendix A—Minimum subjects to be covered in training radiographers. (1) Fundamentals of radiation safety:

(a) Characteristics of ionizing radiation;

(b) Units of radiation dose (mrem) and quantity of radioactivity (curie);

(c) Hazards of exposure to radiation:

(i) Radiation protection standards;

(ii) Biological effects of radiation dose;

(d) Levels of radiation from X-ray machines;

(e) Methods of controlling radiation dose:

(i) Working time;

(ii) Working distances;

(iii) Shielding.

(2) Radiation detection instrumentation to be used:

(a) Use of radiation survey instruments:

(i) Operation;

(ii) Calibration;

(iii) Limitations;

(b) Survey techniques;

(c) Use of personnel monitoring equipment:

(i) Film badges;

(ii) Pocket dosimeters;

(iii) Thermoluminescent dosimeters.

(3) Operation and control of X-ray equipment.

(4) The requirements of pertinent federal and state regulations.

(5) The registrant's written operating and emergency procedures.

(6) Case histories of radiography accidents.

[Statutory Authority: RCW 70.98.050. 94-01-073, § 246-227-170, filed 12/9/93, effective 1/9/94.]

Chapter 246-228 WAC

RADIATION PROTECTION—ANALYTICAL X-RAY EQUIPMENT

WAC

246-228-001	Purpose and scope.
246-228-010	Definitions.
246-228-020	Equipment requirements.
246-228-030	Facility requirements.
246-228-040	Operating requirements.
246-228-050	Personnel requirements.

WAC 246-228-001 Purpose and scope. This chapter provides special requirements for analytical X-ray equipment. The requirements of this chapter are in addition to, and not in substitution for, applicable requirements in other chapters of these regulations.

[Statutory Authority: RCW 43.70.040. 91-02-049 (Order 121), recodified as § 246-228-001, filed 12/27/90, effective 1/31/91; Order 1084, § 402-40-010, filed 1/14/76.]

WAC 246-228-010 Definitions. (1) "Analytical X-ray equipment" means equipment used for X-ray diffraction or fluorescence analysis.

(2) "Analytical X-ray system" means a group of components utilizing X rays to determine the elemental composition or to examine the microstructure of materials.

(3) "Fail-safe characteristics" mean a design feature which causes beam port shutters to close, or otherwise prevents emergence of the primary beam, upon the failure of a safety or warning device.

(4) "Local components" mean parts of an analytical X-ray system and include areas that are struck by X rays such as radiation source housings, ports and shutter assemblies, collimators, sample holders, cameras, goniometers, detectors, and

shielding, but do not include power supplies, transformers, amplifiers, readout devices, and control panels.

(5) "Normal operating procedures" mean step-by-step instructions necessary to accomplish the analysis. These procedures shall include sample insertion and manipulation, equipment alignment, routine maintenance by the registrant, and data recording procedures which are related to radiation safety.

(6) "Open-beam configuration" means a mode of operation of an analytical X-ray system in which an individual could accidentally place some part of their body into the primary beam during normal operation if no further safety devices are incorporated.

(7) "Primary beam" means ionizing radiation which passes through an aperture of the source housing via a direct path from the X-ray tube located in the radiation source housing.

[Statutory Authority: RCW 43.70.040. 91-02-049 (Order 121), recodified as § 246-228-010, filed 12/27/90, effective 1/31/91. Statutory Authority: RCW 70.98.050. 81-01-011 (Order 1570), § 402-40-020, filed 12/8/80; Order 1084, § 402-40-020, filed 1/14/76.]

WAC 246-228-020 Equipment requirements. (1) *Safety device.* A device which prevents the entry of any portion of an individual's body into the primary X-ray beam path, or which causes the beam to be shut off upon entry into its path, shall be provided for all open-beam configurations. A registrant or licensee may apply to the department for an exemption from the requirement of a safety device. Such application shall include:

(a) A description of the various safety devices that have been evaluated;

(b) The reason each of these devices cannot be used; and

(c) A description of the alternative methods that will be employed to minimize the possibility of an accidental exposure, including procedures to assure that operators and others in the area will be informed of the absence of safety devices.

(2) *Warning devices.* Open-beam configurations shall be provided with a readily discernible indication of:

(a) X-ray tube status (ON-OFF) located near the radiation source housing, if the primary beam is controlled in this manner and at or near the port and/or

(b) Shutter status (OPEN-CLOSED) located near each port on the radiation source housing, if the primary beam is controlled in this manner.

(c) Warning devices shall be labeled so that their purpose is easily identified and the devices shall be conspicuous at the beam port. On new equipment installed after January 1, 1976, warning devices shall have fail-safe characteristics.

(3) *Ports.* Unused ports on radiation source housings shall be secured in the closed position in a manner which will prevent casual opening. Such security requirement will be deemed met if the beam port cannot be opened without the use of tools not part of the closure for units installed after January 1, 1981.

(4) *Labeling.* All analytical X-ray equipment shall be labeled with a readily discernible sign or signs bearing the radiation symbol and the words:

(a) "CAUTION - HIGH INTENSITY X-RAY BEAM," or words having a similar intent, on the X-ray source housing; and

(b) "CAUTION RADIATION - THIS EQUIPMENT PRODUCES RADIATION WHEN ENERGIZED," or words having a similar intent, near any switch that energizes an X-ray tube if the radiation source is an X-ray tube; or

(c) "CAUTION - RADIOACTIVE MATERIAL," or words having a similar intent, on the source housing if the radiation source is a radionuclide.

(5) *Shutters.* On new equipment employing open-beam configurations installed after January 1, 1981, each port on the radiation source housing shall be equipped with a shutter that cannot be opened unless a collimator or a coupling has been connected to the port.

(6) *Warning lights.* An easily visible warning light labeled with the words "X RAY ON," or words having a similar intent, shall be located:

(a) Near any switch that energizes an X-ray tube and near any X-ray port and shall be illuminated only when the tube is energized; or

(b) In the case of a radioactive source, near any switch that opens a housing shutter, and shall be illuminated only when the shutter is open.

(c) On equipment installed after January 1, 1981, warning lights shall have fail-safe characteristics.

(7) *Radiation source housing.* Each X-ray tube housing shall be so constructed that with all shutters closed the leakage radiation measured at a distance of 5 cm from its surface is not capable of producing a dose equivalent in excess of 2.5 mrem in one hour at any specified tube rating. If radioactive sources are used, corresponding dose limits shall not exceed 2.5 mrem per hour.

(8) *Generator cabinet.* Each X-ray generator shall be supplied with a protective cabinet which limits leakage radiation measured at a distance of 5 cm from its surface such that it is not capable of producing a dose equivalent in excess of 0.25 mrem in one hour.

[Statutory Authority: RCW 43.70.040. 91-02-049 (Order 121), recodified as § 246-228-020, filed 12/27/90, effective 1/31/91. Statutory Authority: RCW 70.98.050. 81-01-011 (Order 1570), § 402-40-030, filed 12/8/80; Order 1084, § 402-40-030, filed 1/14/76.]

WAC 246-228-030 Facility requirements. (1) *Radiation levels.* The local components of an analytical X-ray system shall be located and arranged and shall include sufficient shielding or access control such that no radiation levels exist in any area surrounding the local component group which could result in a dose to an individual present therein in excess of the dose equivalent limits given in WAC 246-221-060 of these regulations. For systems utilizing X-ray tubes, these levels shall be met at any specified tube rating.

(2) *Surveys.* Radiation surveys, as required by WAC 246-221-110 of all analytical X-ray systems, sufficient to show compliance with WAC 246-228-030(1), shall be performed:

(a) Upon installation of the equipment, and at least once every twelve months thereafter;

(b) Following any change in the initial arrangement, number, or type of local components in the system;

(c) Following any maintenance requiring the disassembly or removal of a local component in the system;

(d) During the performance of maintenance and alignment procedures if the procedures require the presence of a

primary X-ray beam when any local component in the system is disassembled or removed;

(e) Any time a visual inspection of the local components in the system reveals an abnormal condition; and

(f) Whenever personnel monitoring devices required in WAC 246-228-050(2) show a significant increase over the previous monitoring period or the readings are approaching 1/10 of the hands and forearm limit specified in WAC 246-221-010.

(g) Radiation survey measurements shall not be required if a registrant or licensee can demonstrate compliance to the satisfaction of the department with WAC 246-228-030(1) in some other manner.

(3) *Posting.* Each area or room containing analytical X-ray equipment shall be conspicuously posted with a sign or signs bearing the radiation symbol and the words "CAUTION - X-RAY EQUIPMENT," or words having a similar intent.

(4) *Documentation of instruction.* Each facility shall maintain written documentation showing that compliance with WAC 246-228-050 has been met, and shall make such documentation available to the department upon request.

[Statutory Authority: RCW 70.98.050 and 70.98.080. 91-15-083 (Order 183), § 246-228-030, filed 7/23/91, effective 8/23/91. Statutory Authority: RCW 43.70.040. 91-02-049 (Order 121), recodified as § 246-228-030, filed 12/27/90, effective 1/31/91. Statutory Authority: RCW 70.98.050. 81-01-011 (Order 1570), § 402-40-040, filed 12/8/80; Order 1084, § 402-40-040, filed 1/14/76.]

WAC 246-228-040 Operating requirements. (1) *Procedures.* Routine operating procedures shall be written and available to all analytical X-ray equipment workers. No person shall be permitted to operate analytical X-ray equipment in any manner other than that specified in the procedures unless such person has obtained written approval of the radiation safety officer.

(2) *Bypassing.* No person shall bypass a safety device unless such person has obtained the written approval of the radiation safety officer. Such approval shall be for a specified period of time. When a safety device has been bypassed, a readily discernible sign bearing the words "SAFETY DEVICE NOT WORKING," or words having a similar intent, shall be placed on the radiation source housing. The requirements set forth in WAC 246-228-020(1) shall also be met.

[Statutory Authority: RCW 70.98.050 and 70.98.080. 91-15-083 (Order 183), § 246-228-040, filed 7/23/91, effective 8/23/91. Statutory Authority: RCW 43.70.040. 91-02-049 (Order 121), recodified as § 246-228-040, filed 12/27/90, effective 1/31/91. Statutory Authority: RCW 70.98.050. 81-01-011 (Order 1570), § 402-40-050, filed 12/8/80; Order 1084, § 402-40-050, filed 1/14/76.]

WAC 246-228-050 Personnel requirements. (1) *Instruction.* No person shall be permitted to operate or maintain analytical X-ray equipment unless such person has received instruction in and demonstrated competence as to:

(a) Identification of radiation hazards associated with the use of the equipment;

(b) Significance of the various radiation warning and safety devices incorporated into the equipment, or the reasons they have not been installed on certain pieces of equipment and the extra precautions required in such cases;

(c) Proper operating procedures for the equipment;

(d) Symptoms of an acute localized exposure; and

(e) Proper procedures for reporting an actual or suspected exposure.

(2) *Personnel monitoring.* Finger or wrist dosimetric devices shall be provided to and shall be used by:

(a) Analytical X-ray equipment workers using systems having an open-beam configuration and not equipped with a safety device; and

(b) Personnel maintaining analytical X-ray equipment if the maintenance procedures require the presence of a primary X-ray beam when any local component in the analytical X-ray system is disassembled or removed.

(c) Reported dose values shall not be used for the purpose of determining compliance with WAC 246-221-010 of these regulations unless evaluated by a qualified expert.

[Statutory Authority: RCW 70.98.050 and 70.98.080. 91-15-083 (Order 183), § 246-228-050, filed 7/23/91, effective 8/23/91. Statutory Authority: RCW 43.70.040. 91-02-049 (Order 121), recodified as § 246-228-050, filed 12/27/90, effective 1/31/91; Order 1084, § 402-40-060, filed 1/14/76.]

Chapter 246-229 WAC

RADIATION PROTECTION—PARTICLE ACCELERATORS

WAC

246-229-0001	Purpose.
246-229-0010	Definitions.
246-229-0020	How do I get approval for particle accelerator installation and use?
246-229-0030	What are the training requirements for particle accelerator use?
246-229-0040	Are there other requirements that apply to the use of particle accelerators?
246-229-0050	Who is authorized to terminate a registrant's use of a particle accelerator?
246-229-0060	What are the minimum requirements for particle accelerator installation?
246-229-0070	What are the minimum requirements for operating and emergency procedure documentation?
246-229-0080	What are the requirements for bypassing safety interlocks?
246-229-0090	What are the minimum requirements for particle accelerator use?
246-229-0100	What are the recordkeeping requirements for particle accelerator use?

DISPOSITION OF SECTIONS FORMERLY CODIFIED IN THIS CHAPTER

246-229-001	Purpose and scope. [Statutory Authority: RCW 70.98.050 and 70.98.080. 91-15-083 (Order 183), § 246-229-001, filed 7/23/91, effective 8/23/91. Statutory Authority: RCW 43.70.040. 91-02-049 (Order 121), recodified as § 246-229-001, filed 12/27/90, effective 1/31/91. Statutory Authority: RCW 70.98.050. 81-01-011 (Order 1570), § 402-44-010, filed 12/8/80; Order 1084, § 402-44-010, filed 1/14/76.] Repealed by 02-14-050, filed 6/27/02, effective 7/28/02. Statutory Authority: RCW 70.98.050 and [70.98.]080.
246-229-010	Registration requirements. [Statutory Authority: RCW 70.98.050 and 70.98.080. 91-15-083 (Order 183), § 246-229-010, filed 7/23/91, effective 8/23/91. Statutory Authority: RCW 43.70.040. 91-02-049 (Order 121), recodified as § 246-229-010, filed 12/27/90, effective 1/31/91; Order 1084, § 402-44-020, filed 1/14/76.] Repealed by 97-20-101, filed 9/29/97, effective 10/30/97. Statutory Authority: RCW 43.70.040.
246-229-020	General requirements for the issuance of a registration for particle accelerators. [Statutory Authority: RCW 70.98.050 and 70.98.080. 91-15-083 (Order 183), § 246-229-020, filed 7/23/91, effective 8/23/91. Statutory Authority: RCW 43.70.040. 91-02-049 (Order 121), recodified as § 246-229-020, filed 12/27/90, effective 1/31/91. Statutory Authority: RCW 70.98.050. 81-01-011 (Order 1570), § 402-44-030, filed 12/8/80; Order 1084, § 402-44-030, filed 1/14/76.] Repealed by 02-14-

050, filed 6/27/02, effective 7/28/02. Statutory Authority: RCW 70.98.050 and [70.98.]080.

246-229-030 Human use of particle accelerators. [Statutory Authority: RCW 70.98.050 and 70.98.080. 91-15-083 (Order 183), § 246-229-030, filed 7/23/91, effective 8/23/91. Statutory Authority: RCW 43.70.040. 91-02-049 (Order 121), recodified as § 246-229-030, filed 12/27/90, effective 1/31/91. Statutory Authority: RCW 70.98.050. 81-01-011 (Order 1570), § 402-44-040, filed 12/8/80; Order 1084, § 402-44-040, filed 1/14/76.] Repealed by 02-14-050, filed 6/27/02, effective 7/28/02. Statutory Authority: RCW 70.98.050 and [70.98.]080.

246-229-040 General provisions. [Statutory Authority: RCW 43.70.-040. 91-02-049 (Order 121), recodified as § 246-229-040, filed 12/27/90, effective 1/31/91. Statutory Authority: RCW 70.98.050. 81-01-011 (Order 1570), § 402-44-050, filed 12/8/80; Order 1084, § 402-44-050, filed 1/14/76.] Repealed by 97-20-101, filed 9/29/97, effective 10/30/97. Statutory Authority: RCW 43.70.040.

246-229-050 Limitations. [Statutory Authority: RCW 70.98.050 and 70.98.080. 91-15-083 (Order 183), § 246-229-050, filed 7/23/91, effective 8/23/91. Statutory Authority: RCW 43.70.040. 91-02-049 (Order 121), recodified as § 246-229-050, filed 12/27/90, effective 1/31/91. Statutory Authority: RCW 70.98.050. 81-01-011 (Order 1570), § 402-44-060, filed 12/8/80; Order 1084, § 402-44-060, filed 1/14/76.] Repealed by 02-14-050, filed 6/27/02, effective 7/28/02. Statutory Authority: RCW 70.98.050 and [70.98.]080.

246-229-060 Shielding and safety design requirements. [Statutory Authority: RCW 70.98.050 and 70.98.080. 91-15-083 (Order 183), § 246-229-060, filed 7/23/91, effective 8/23/91. Statutory Authority: RCW 43.70.040. 91-02-049 (Order 121), recodified as § 246-229-060, filed 12/27/90, effective 1/31/91. Statutory Authority: RCW 70.98.050. 81-01-011 (Order 1570), § 402-44-070, filed 12/8/80; Order 1084, § 402-44-070, filed 1/14/76.] Repealed by 02-14-050, filed 6/27/02, effective 7/28/02. Statutory Authority: RCW 70.98.050 and [70.98.]080.

246-229-070 Particle accelerator controls and interlock systems. [Statutory Authority: RCW 43.70.040. 91-02-049 (Order 121), recodified as § 246-229-070, filed 12/27/90, effective 1/31/91. Statutory Authority: RCW 70.98.050. 81-01-011 (Order 1570), § 402-44-080, filed 12/8/80; Order 1084, § 402-44-080, filed 1/14/76.] Repealed by 02-14-050, filed 6/27/02, effective 7/28/02. Statutory Authority: RCW 70.98.050 and [70.98.]080.

246-229-080 Warning devices. [Statutory Authority: RCW 70.98.-050 and 70.98.080. 91-15-083 (Order 183), § 246-229-080, filed 7/23/91, effective 8/23/91. Statutory Authority: RCW 43.70.040. 91-02-049 (Order 121), recodified as § 246-229-080, filed 12/27/90, effective 1/31/91. Statutory Authority: RCW 70.98.050. 81-01-011 (Order 1570), § 402-44-090, filed 12/8/80; Order 1084, § 402-44-090, filed 1/14/76.] Repealed by 02-14-050, filed 6/27/02, effective 7/28/02. Statutory Authority: RCW 70.98.050 and [70.98.]080.

246-229-090 Operating procedures. [Statutory Authority: RCW 70.98.050 and 70.98.080. 91-15-083 (Order 183), § 246-229-090, filed 7/23/91, effective 8/23/91. Statutory Authority: RCW 43.70.040. 91-02-049 (Order 121), recodified as § 246-229-090, filed 12/27/90, effective 1/31/91. Statutory Authority: RCW 70.98.050. 81-01-011 (Order 1570), § 402-44-100, filed 12/8/80; Order 1084, § 402-44-100, filed 1/14/76.] Repealed by 02-14-050, filed 6/27/02, effective 7/28/02. Statutory Authority: RCW 70.98.050 and [70.98.]080.

246-229-100 Radiation monitoring requirements. [Statutory Authority: RCW 43.70.040. 91-02-049 (Order 121), recodified as § 246-229-100, filed 12/27/90, effective 1/31/91. Statutory Authority: RCW 70.98.050. 81-01-011 (Order 1570), § 402-44-110, filed 12/8/80; Order 1084, § 402-44-110, filed 1/14/76.] Repealed by 02-14-050, filed 6/27/02, effective 7/28/02. Statutory Authority: RCW 70.98.050 and [70.98.]080.

246-229-110 Ventilation systems. [Statutory Authority: RCW 70.98.050 and 70.98.080. 91-15-083 (Order 183), § 246-229-110, filed 7/23/91, effective 8/23/91. Statutory Authority: RCW 43.70.040. 91-02-049 (Order 121), recodified as § 246-229-110, filed 12/27/90, effective 1/31/91. Statutory Authority: RCW 70.98.080. 87-01-031 (Order 2450), § 402-44-120, filed 12/11/86. Statutory Authority: RCW 70.98.050. 81-01-011 (Order 1570), § 402-44-120, filed 12/8/80; Order 1084, § 402-44-120, filed 1/14/76.] Repealed by 02-14-050, filed 6/27/02, effective 7/28/02. Statutory Authority: RCW 70.98.050 and [70.98.]080.

WAC 246-229-0001 Purpose. The purpose of this chapter is to regulate certain sources of ionizing radiation as required by RCW 70.98.050 and 70.98.080. This chapter provides for the registration and use of all particle accelerators installed and/or used in Washington state.

[Statutory Authority: RCW 70.98.050 and [70.98.]080. 02-14-050, § 246-229-0001, filed 6/27/02, effective 7/28/02.]

WAC 246-229-0010 Definitions. "Department" means the department of health.

"High radiation area" means any area, accessible to individuals, in which radiation levels could result in an individual receiving a dose equivalent in excess of 1 mSv (100 mrem) in one hour at 30 centimeters from any source of radiation or from any surface that the radiation penetrates. For purposes of these regulations, rooms or areas in which diagnostic X-ray systems are used for healing arts purposes are not considered high radiation areas.

"Particle accelerator" means any machine capable of accelerating electrons, protons, deuterons, or other charged particles in a vacuum and of discharging the resultant particulate or other radiation into a medium at energies usually in excess of 1 MeV.

"Qualified expert" means an individual who has demonstrated to the satisfaction of the department that he or she is knowledgeable, trained, and/or experienced to measure ionizing radiation, evaluate safety techniques, and/or advise appropriately on matters of radiation protection. The department reserves the right to recognize qualifications in specific areas of radiation protection.

"Radiation machine" means any device capable of producing ionizing radiation except those devices with radioactive materials as the only source of radiation.

"Radiation safety committee" means a registrant-appointed committee of at least three members to evaluate and approve all proposals for research, diagnostic, and therapeutic use of a particle accelerator. Committee members should include, at a minimum, persons with expertise related to the intended use of the accelerator, and a person experienced in depth dose calculations and radiation safety.

"Radiation safety officer" means a knowledgeable and responsible person assigned by the registrant who provides radiation protection expertise to facilities and users of radiation machines.

"Radioactive material" means any material that emits radiation energy spontaneously. A machine that emits X rays is not considered a radioactive material.

"Registrant" means an owner or controller of a radiation machine who is responsible for the safe operation of the radiation machine.

"Restricted area" means any area with limited access for the purposes of protecting individuals from undue risks of radiation exposure. A restricted area cannot be a residential area; a building may contain both restricted areas and residential areas.

"Unrestricted area" means any area freely available to the public, workers, or other persons; and where a person

may receive less than 1 mSv (100 mrem) per year or be subject to any dose rate less than 20 μSv/hr (2 mrem/hr).

[Statutory Authority: RCW 70.98.050 and [70.98.]080. 02-14-050, § 246-229-0010, filed 6/27/02, effective 7/28/02.]

WAC 246-229-0020 How do I get approval for particle accelerator installation and use? (1) Anyone installing or using particle accelerators in Washington state must get department approval by registering with the department according to chapter 246-224 WAC, Radiation protection—Radiation machine assembly and registration, prior to installation or use of the particle accelerator.

(2) A registrant must submit the following information:

(a) A membership list showing the establishment of a radiation safety committee;

(b) An identified radiation safety officer;

(c) A qualified expert's radiation shielding and safety plan review for approval according to chapter 246-225 WAC, Radiation protection—X rays in the healing arts; and

(d) Operating and emergency procedures.

(3) If the particle accelerator is intended for human use:

(a) The designated user must be a physician with training and experience in deep therapy techniques or in the use of particle accelerators to treat humans; and

(b) The registrant must appoint a radiation safety committee.

(4) To submit registration and questions, contact the department by phone or mail at:

Washington State Health Department
Division of Radiation Protection
Attn: X-Ray Registration
P.O. Box 47827
Olympia, WA 98504-7827
360-236-3230 or 1-800-299-XRAY

(5) A facility may not operate a particle accelerator:

(a) Without approval from the department; and

(b) If any applicable requirement in this chapter is not met.

[Statutory Authority: RCW 70.98.050 and [70.98.]080. 02-14-050, § 246-229-0020, filed 6/27/02, effective 7/28/02.]

WAC 246-229-0030 What are the training requirements for particle accelerator use? (1) The registrant must:

(a) Ensure training for operators to use the particle accelerator that meets the requirements of subsection (2) of this section; and

(b) Maintain training records that demonstrate compliance with the requirements of subsection (2) of this section for two years after the last employment or operation date for the operator.

(2) At a minimum, operators must:

(a) Demonstrate radiation safety expertise and other skills required by the facility training program;

(b) Understand applicable requirements and the registrant's operating and emergency procedures; and

(c) Demonstrate competence to use the particle accelerator, related equipment, and survey instruments, which are required by the operator's assignment.

[Statutory Authority: RCW 70.98.050 and [70.98.]080. 02-14-050, § 246-229-0030, filed 6/27/02, effective 7/28/02.]

WAC 246-229-0040 Are there other requirements that apply to the use of particle accelerators? (1) Registrants must meet the radiation standards of chapter 246-220 WAC, Radiation protection—General provisions; chapter 246-221 WAC, Radiation protection standards; and chapter 246-222 WAC, Radiation protection—Worker rights; for public, operator, and user protection.

(2) Depending on the installation, type of machine, and intended use, registrants may also need to meet:

(a) Industrial radiographic operations, chapters 246-243 and 246-227 WAC;

(b) X ray in the healing arts, chapter 246-225 WAC; and

(c) Medical therapy, chapter 246-240 WAC.

(3) Registrants using particle accelerators to produce radioactive material must meet the requirements of chapter 246-232 WAC, Radioactive material—Licensing applicability; and chapter 246-235 WAC, Radioactive materials—Specific licenses.

[Statutory Authority: RCW 70.98.050 and [70.98.]080. 02-14-050, § 246-229-0040, filed 6/27/02, effective 7/28/02.]

WAC 246-229-0050 Who is authorized to terminate a registrant's use of a particle accelerator? The radiation safety committee, the radiation safety officer of the facility, and the department are authorized to terminate the particle accelerator operations at a facility if the action is determined necessary to protect health and minimize danger to public health and safety or property.

[Statutory Authority: RCW 70.98.050 and [70.98.]080. 02-14-050, § 246-229-0050, filed 6/27/02, effective 7/28/02.]

WAC 246-229-0060 What are the minimum requirements for particle accelerator installation? (1) Shielding and safety design. The installation must include:

(a) Primary and secondary radiation barriers to comply with the radiation protection standards of WAC 246-221-010 and 246-221-060.

(b) If necessary, a ventilation system designed to limit exposure to airborne radioactive materials as follows:

(i) For restricted areas, limits are specified in WAC 246-221-040;

(ii) For unrestricted areas, limits are specified in WAC 246-221-070; and/or

(iii) For unrestricted areas, the facility must prohibit releases, venting, or otherwise discharging airborne radioactive material which exceeds the limits of WAC 246-247-040 or 246-221-290 Appendix A - Table II, unless authorized in WAC 246-221-180 or 246-221-070(2). To calculate, concentrations may be averaged over a period not greater than one year. Every reasonable effort should be made to prohibit releases of radioactive material to unrestricted areas.

(2) Controls, instrumentation, and readouts. All controls, instrumentation, and readouts must be clearly identified and functional on the particle accelerator control console.

(3) Safety interlocks. All entrances into a target room or other high radiation area must have interlocks that shut down the machine if a door is opened (e.g., barrier penetrated) during irradiation.

(a) Manual reset. If the interlock engages (shuts the machine off), the machine must stay off until manually reset at the console.

(b) Independent function. Each safety interlock must function independently of any other safety interlocks.

(c) Failsafe. All safety interlocks must ensure that any defect or component failure in the interlock system prevents operation of the accelerator.

(4) Emergency power cutoff switch system. An identifiable "scram" button or emergency power cutoff switch which stops irradiation must exist in all high radiation areas. If the switch is engaged (shuts off the machine), the system must prohibit the accelerator from restarting until the switch in the room is reset and the main console restarted manually. Use of this system is limited to emergency situations.

(5) High radiation area warning devices. For areas designated as high radiation areas, the registrant must:

(a) Identify barriers (including temporary) for and pathways to high radiation areas according to WAC 246-221-120, Caution signs and labels.

(b) Except inside treatment rooms in facilities designed for human exposure, install easily observable warning lights at area entrances that activate when radiation is being produced.

(c) Except in facilities designed for human exposure, install an audible warning device which activates for fifteen seconds prior to accelerator use in all high radiation areas. Instruct all personnel in the area as to the signal's meaning.

(d) Except in facilities designed for human exposure, install continuous radiation detection monitoring equipment. The equipment must be electrically independent of the accelerator control and interlock systems and be calibrated every six months at a minimum. The equipment must provide:

(i) A remote and local readout; and

(ii) Visual and/or audible alarms at the control panel, entrances to high radiation areas, and other appropriate locations.

[Statutory Authority: RCW 70.98.050 and [70.98.]080. 02-14-050, § 246-229-0060, filed 6/27/02, effective 7/28/02.]

WAC 246-229-0070 What are the minimum requirements for operating and emergency procedure documentation? At a minimum, the procedures must include instruction on:

(1) Securing the accelerator to prevent unauthorized use.

(2) Operating the accelerator.

(3) Responding to an emergency involving the accelerator.

(4) Performing safety and warning device (including interlocks) checks at least every three months.

(5) Performing radiation surveys.

(6) Performing monitoring equipment calibration (if applicable).

(7) Recordkeeping and/or documentation.

(8) Bypassing safety interlocks.

[Statutory Authority: RCW 70.98.050 and [70.98.]080. 02-14-050, § 246-229-0070, filed 6/27/02, effective 7/28/02.]

WAC 246-229-0080 What are the requirements for bypassing safety interlocks? Bypassing a safety interlock or interlocks is allowed only if:

(1) Authorized by the radiation safety committee and/or radiation safety officer;

(2) Recorded in a permanent log and a notice posted at the accelerator control console; and

(3) The bypass procedure is terminated as soon as possible.

[Statutory Authority: RCW 70.98.050 and [70.98.]080. 02-14-050, § 246-229-0080, filed 6/27/02, effective 7/28/02.]

WAC 246-229-0090 What are the minimum requirements for particle accelerator use? The minimum requirements for the registrant to use a particle accelerator are to:

(1) Register the accelerator with the department;

(2) Submit plan review/shielding design to the department and receive written approval;

(3) Train operators and users;

(4) Complete a qualified expert's radiation protection survey of the room/area initially and after any changes in shielding, equipment, or occupancy of adjacent areas;

(5) Provide appropriate portable radiation monitoring equipment that is operable and tested daily, and calibrated every six months, or after any service/repair;

(6) Develop operating and emergency procedures and keep a copy of the current procedures at the accelerator control panel; and

(7) If applicable, provide the means and guidance to determine airborne particulate radioactivity present in areas of airborne hazards, and/or particulate radiation contamination (smear surveys) in target and other pertinent areas.

[Statutory Authority: RCW 70.98.050 and [70.98.]080. 02-14-050, § 246-229-0090, filed 6/27/02, effective 7/28/02.]

WAC 246-229-0100 What are the recordkeeping requirements for particle accelerator use?

Records	Retention time
Operator training and qualifications	Two years past last employment/operation
Safety and warning device checks	Two years
Area radiation monitors	Two years (if necessary)
Instrumentation tests	Two years
Smear results	Two years (if necessary)
Qualified expert radiation protection surveys	Life of the accelerator
Electrical circuit diagrams	Life of the accelerator
Permanent log of bypassing interlocks	Life of the accelerator

[Statutory Authority: RCW 70.98.050 and [70.98.]080. 02-14-050, § 246-229-0100, filed 6/27/02, effective 7/28/02.]

Chapter 246-231 WAC

PACKAGING AND TRANSPORTATION OF RADIOACTIVE MATERIAL

WAC

APPENDIX A—DETERMINATION OF A1 AND A2

246-231-001 Purpose and scope.
246-231-005 Requirement for license.
246-231-010 Definitions.
246-231-030 Transportation of licensed material.
246-231-035 Deliberate misconduct.
246-231-040 Exemptions.
246-231-050 General licenses for carriers.
246-231-060 General license—USNRC-approved package.

246-231-080	General license—DOT specification container.
246-231-090	General license—Use of foreign approved package.
246-231-094	General license—Fissile material.
246-231-096	General license—Plutonium-beryllium special form material.
246-231-098	External radiation standards for all packages.
246-231-100	Applicability of operating controls and procedures.
246-231-103	Assumptions as to unknown properties.
246-231-106	Preliminary determinations.
246-231-110	Routine determinations.
246-231-120	Air transport of plutonium.
246-231-130	Opening instructions.
246-231-133	Public inspection of application.
246-231-136	Records.
246-231-140	Advance notification of shipment of irradiated reactor fuel and nuclear waste.
246-231-150	Quality assurance requirements.
246-231-160	Quality assurance organization.
246-231-170	Quality assurance program.
246-231-178	Handling, storage, and shipping control.
246-231-180	Inspection, test, and operating status.
246-231-182	Nonconforming materials, parts, or components.
246-231-184	Corrective action.
246-231-186	Quality assurance records.
246-231-188	Audits.
246-231-200	Appendix A—Determination of A1 and A2.

DISPOSITION OF SECTIONS FORMERLY CODIFIED IN THIS CHAPTER

246-231-070 Previously approved package. [Statutory Authority: RCW 70.98.050. 99-15-105, § 246-231-070, filed 7/21/99, effective 8/21/99.] Repealed by 08-09-093, filed 4/18/08, effective 5/19/08. Statutory Authority: RCW 70.98.050.

APPENDIX A—DETERMINATION OF A1 AND A2

WAC 246-231-001 Purpose and scope. (1) This chapter establishes requirements for packaging, preparation for shipment, and transportation of radioactive material.

(2) Licensees shall also comply with applicable requirements of the United States Nuclear Regulatory Commission (USNRC), the United States Department of Transportation (USDOT), the United States Postal Service[1] (USPS), and other requirements of Title 246 WAC.

(3) The regulations in this chapter apply to any licensee authorized by specific or general license issued by the department, USNRC or an agreement state, to receive, possess, use, or transfer licensed material, if the licensee delivers that material to a carrier for transport, transports the material outside the site of usage as specified in the license, or transports that material on public highways. No provision of this chapter authorizes possession of licensed material.

[1] *Mailing Standards of the United States Postal Service, Domestic Mail Manual,* 39 CFR 111.1.

[Statutory Authority: RCW 70.98.050. 08-09-093, § 246-231-001, filed 4/18/08, effective 5/19/08; 99-15-105, § 246-231-001, filed 7/21/99, effective 8/21/99.]

WAC 246-231-005 Requirement for license. No licensee shall deliver radioactive material to a carrier for transport, or transport radioactive material, except as authorized in a general or specific license issued by the department, USNRC or an agreement state, or as exempted in this chapter.

[Statutory Authority: RCW 70.98.050. 08-09-093, § 246-231-005, filed 4/18/08, effective 5/19/08; 99-15-105, § 246-231-005, filed 7/21/99, effective 8/21/99.]

WAC 246-231-010 Definitions. The following terms are as defined here for the purpose of this chapter. To ensure compatibility with international transportation standards, all limits in this chapter are given in terms of dual units: The International System of Units (SI) followed or preceded by U.S. standard or customary units. The U.S. customary units are not exact equivalents, but are rounded to a convenient value, providing a functionally equivalent unit. For the purpose of this chapter, either unit may be used.

(1) "A1" means the maximum activity of special form radioactive material permitted in a Type A package. This value is either listed in WAC 246-231-200, Table A-1 or may be derived in accordance with the procedures prescribed in WAC 246-231-200.

(2) "A2" means the maximum activity of radioactive material, other than special form material, LSA and SCO material, permitted in a Type A package. This value is either listed in WAC 246-231-200, Table A-1, or may be derived in accordance with the procedure prescribed in WAC 246-231-200.

(3) "Agreement state" means any state with which the United States Nuclear Regulatory Commission has entered into an effective agreement under section 274 b. of the Atomic Energy Act of 1954, as amended (73 Stat. 689).

(4) "Carrier" means a person engaged in the transportation of passengers or property by land or water as a common, contract, or private carrier, or by civil aircraft.

(5) "Certificate holder" means a person who has been issued a certificate of compliance or other package approval by the U.S. Nuclear Regulatory Commission (USNRC).

(6) "Certificate of compliance (CoC)" means the certificate issued by the USNRC under 10 CFR 71 Subpart D which approves the design of a package for the transportation of radioactive material.

(7) "Close reflection by water" means immediate contact by water of sufficient thickness for maximum reflection of neutrons.

(8) "Consignment" means each shipment of a package or groups of packages or load of radioactive material offered by a shipper for transport.

(9) "Containment system" means the assembly of components of the packaging intended to retain the radioactive material during transport.

(10) "Conveyance" means:

(a) For transport by public highway or rail any transport vehicle or large freight container;

(b) For transport by water any vessel, or any hold, compartment, or defined deck area of a vessel including any transport vehicle on board the vessel; and

(c) For transport by any aircraft.

(11) "Criticality safety index (CSI)" means the dimensionless number (rounded up to the next tenth) assigned to and placed on the label of a fissile material package, to designate the degree of control of accumulation of packages containing fissile material during transportation. Determination of the criticality safety index is described in WAC 246-231-094, 246-231-096, and 10 CFR 71.59.

(12) "Department" means the Washington state department of health, which has been designated as the state radiation control agency under chapter 70.98 RCW.

(13) "Deuterium" means, for the purposes of WAC 246-231-040 and 246-231-094, deuterium and any deuterium compounds, including heavy water, in which the ratio of deuterium atoms to hydrogen atoms exceeds 1:5000.

(14) "DOT" and "USDOT" mean the United States Department of Transportation. USDOT regulations are found in Code of Federal Regulations Title 49 Transportation.

(15) "Exclusive use" means the sole use by a single consignor of a conveyance for which all initial, intermediate, and final loading and unloading are carried out in accordance with the direction of the consignor or consignee. The consignor and the carrier must ensure that any loading or unloading is performed by personnel having radiological training and resources appropriate for safe handling of the consignment. The consignor must issue specific instructions, in writing, for maintenance of exclusive use shipment controls, and include them with the shipping paper information provided to the carrier by the consignor.

(16) "Fissile material" means the radionuclides uranium-233, uranium-235, plutonium-239, and plutonium-241, or any combination of these radionuclides. Fissile material means the fissile nuclides themselves, not material containing fissile nuclides. Unirradiated natural uranium and depleted uranium, and natural uranium or depleted uranium that has been irradiated in thermal reactors only are not included in this definition. Certain exclusions from fissile material controls are provided in WAC 246-231-040.

(17) "Graphite" means graphite with a boron equivalent content less than 5 parts per million and density greater than 1.5 grams per cubic centimeter.

(18) "License" means a license issued by the department.

(19) "Licensed material" means radioactive, by-product, source, or special nuclear material received, possessed, used, or transferred under a general or specific license issued by the department pursuant to the regulations in this chapter, or issued by the USNRC or an agreement state pursuant to equivalent regulations.

(20) "Licensee" means any person who is licensed by the department under these rules and the act.

(21) "Low specific activity (LSA) material" means radioactive material with limited specific activity which is nonfissile or is excepted under WAC 246-231-040 satisfies the descriptions and limits set forth below. Shielding materials surrounding the LSA material may not be considered in determining the estimated average specific activity of the package contents. LSA material must be in one of three groups:

(a) LSA-I.

(i) Uranium and thorium ores, concentrates of uranium and thorium ores, and other ores containing naturally occurring radioactive radionuclides which are not intended to be processed for the use of these radionuclides; or

(ii) Solid unirradiated natural uranium or depleted uranium or natural thorium or their solid or liquid compounds or mixtures; or

(iii) Radioactive material for which the A2 value is unlimited; or

(iv) Other radioactive material in which the activity is distributed throughout and the estimated average specific activity does not exceed 30 times the value for exempt material activity concentration determined in accordance with Appendix A.

(b) LSA-II.

(i) Water with tritium concentration up to 0.8 TBq/liter (20.0 Ci/liter); or

(ii) Other material in which the activity is distributed throughout, and the average specific activity does not exceed 1E-4 A2/g for solids and gases, and 1E-5 A2/g for liquids.

(c) LSA-III. Solids (e.g., consolidated wastes, activated materials), excluding powders, that satisfy the requirements of the 10 CFR 71.77, in which:

(i) The radioactive material is distributed throughout a solid or a collection of solid objects, or is essentially uniformly distributed in a solid compact binding agent (such as concrete, bitumen, ceramic, etc.); and

(ii) The radioactive material is relatively insoluble, or it is intrinsically contained in a relatively insoluble material, so that, even under loss of packaging, the loss of radioactive material per package by leaching, when placed in water for seven days, would not exceed 0.1 A2; and

(iii) The estimated average specific activity of the solid does not exceed 2E-3 A2/g.

(22) "Low toxicity alpha emitters" means natural uranium, depleted uranium, natural thorium; uranium-235, uranium-238, thorium-232, thorium-228 or thorium-230 when contained in ores or physical or chemical concentrates or tailings; or alpha emitters with a half-life of less than ten days.

(23) "Maximum normal operating pressure" means the maximum gauge pressure that would develop in the containment system in a period of one year under the heat condition specified in USNRC regulations 10 CFR 71.71 (c)(1), in the absence of venting, external cooling by an ancillary system, or operational controls during transport.

(24) "Natural thorium" means thorium with the naturally occurring distribution of thorium isotopes (essentially 100 weight percent thorium-232).

(25) "Normal form radioactive material" means radioactive material that has not been demonstrated to qualify as "special form radioactive material."

(26) "Nuclear waste" as used in WAC 246-231-140 means any quantity of radioactive material (not including radiography sources being returned to the manufacturer) required to be in Type B packaging while transported to, through, or across state boundaries to a disposal site, or to a collection point for transport to a disposal site. Nuclear waste, as used in these regulations, is a special classification of radioactive waste.

(27) "Optimum interspersed hydrogenous moderation" means the presence of hydrogenous material between packages to such an extent that the maximum nuclear reactivity results.

(28) "Package" means the packaging together with its radioactive contents as presented for transport.

(a) "Fissile material package" or Type AF package, Type BF package, Type B(U)F package or Type B(M)F package means a fissile material packaging together with its fissile material contents.

(b) "Type A package" means a Type A packaging together with its radioactive contents. A Type A package is defined and must comply with the USDOT regulations in 49 CFR 173.

(c) "Type B package" means a Type B packaging together with its radioactive contents. On approval by the USNRC, a Type B package design is designated by the USNRC as B(U) unless the package has a maximum normal operating pressure of more than 700 kPa (100 lbs/in^2) gauge or a pressure relief device that would allow the release of radioactive material to the environment under the tests specified in USNRC regulations 10 CFR 71.73 (hypothetical accident conditions), in which case it will receive a designation B(M). B(U) refers to the need for unilateral approval of international shipments; B(M) refers to the need for multilateral approval of international shipments. There is no distinction made in how packages with these designations may be used in domestic transportation. To determine their distinction for international transportation, see USDOT regulations in 49 CFR 173. A Type B package approved before September 6, 1983, was designated only as Type B. Limitations on its use are specified in 10 CFR 71.19.

(29) "Packaging" means the assembly of components necessary to ensure compliance with the packaging requirements of this chapter. It may consist of one or more receptacles, absorbent materials, spacing structures, thermal insulation, radiation shielding, and devices for cooling or absorbing mechanical shocks. The vehicle, tie-down system, and auxiliary equipment may be designated as part of the packaging.

(30) "Special form radioactive material" means radioactive material that satisfies the following conditions:

(a) It is either a single solid piece or is contained in a sealed capsule that can be opened only by destroying the capsule;

(b) The piece or capsule has at least one dimension not less than 5 mm (0.2 in); and

(c) It satisfies the requirements of 10 CFR 71.75. A special form encapsulation designed in accordance with the USNRC requirements 10 CFR 71.4 in effect on June 30, 1983, (see 10 CFR 71, revised as of January 1, 1983), and constructed before July 1, 1985, and a special form encapsulation designed in accordance with the requirements of the USNRC requirements in 10 CFR 71.4 in effect on March 31, 1996 (see 10 CFR 71, revised as of January 1, 1983), and constructed before April 1, 1998, may continue to be used. Any other special form encapsulation must meet the specifications of this definition.

(31) "Specific activity of a radionuclide" means the radioactivity of the radionuclide per unit mass of that nuclide. The specific activity of a material in which the radionuclide is essentially uniformly distributed is the radioactivity per unit mass of the material.

(32) "Spent nuclear fuel" or "spent fuel" means fuel that has been withdrawn from a nuclear reactor following irradiation, has undergone at least one year's decay since being used as a source of energy in a power reactor, and has not been chemically separated into its constituent elements by reprocessing. Spent fuel includes the special nuclear material, byproduct material, source material, and other radioactive materials associated with fuel assemblies.

(33) "State" means a state of the United States, the District of Columbia, the Commonwealth of Puerto Rico, the Virgin Islands, Guam, American Samoa, and the Commonwealth of the Northern Mariana Islands.

(34) "Surface contaminated object (SCO)" means a solid object that is not itself classed as radioactive material, but which has radioactive material distributed on any of its surfaces. SCO must be in one of two groups with surface activity not exceeding the following limits:

(a) SCO-I: A solid object on which:

(i) The nonfixed contamination on the accessible surface averaged over 300 cm^2 (or the area of the surface if less than 300 cm^2) does not exceed 4 Bq/cm^2 (1E-4 microcurie/cm^2) for beta and gamma and low toxicity alpha emitters, or 0.4 Bq/cm^2 (1E-5 microcurie/cm^2) for all other alpha emitters;

(ii) The fixed contamination on the accessible surface averaged over 300 cm^2 (or the area of the surface if less than 300 cm^2) does not exceed 4E+4 Bq/cm^2 (1.0 microcurie/cm^2) for beta and gamma and low toxicity alpha emitters, or 4E+3 Bq/cm^2 (0.1 microcurie/cm^2) for all other alpha emitters; and

(iii) The nonfixed contamination plus the fixed contamination on the inaccessible surface averaged over 300 cm^2 (or the area of the surface if less than 300 cm^2) does not exceed 4E+4 Bq/cm^2 (1 microcurie/cm^2) for beta and gamma and low toxicity alpha emitters, or 4E+3 Bq/cm^2 (0.1 microcurie/cm^2) for all other alpha emitters.

(b) SCO-II: A solid object on which the limits for SCO-I are exceeded and on which:

(i) The nonfixed contamination on the accessible surface averaged over 300 cm^2 (or the area of the surface if less than 300 cm^2) does not exceed 400 Bq/cm^2 (1E-2 microcurie/cm^2) for beta and gamma and low toxicity alpha emitters or 40 Bq/cm^2 (1E-3 microcurie/cm^2) for all other alpha emitters;

(ii) The fixed contamination on the accessible surface averaged over 300 cm^2 (or the area of the surface if less than 300 cm^2) does not exceed 8E+5 Bq/cm^2 (20 microcuries/cm^2) for beta and gamma and low toxicity alpha emitters, or 8E+4 Bq/cm^2 (2 microcuries/cm^2) for all other alpha emitters; and

(iii) The nonfixed contamination plus the fixed contamination on the inaccessible surface averaged over 300 cm^2 (or the area of the surface if less than 300 cm^2) does not exceed 8E+5 Bq/cm^2 (20 microcuries/cm^2) for beta and gamma and low toxicity alpha emitters, or 8E+4 Bq/cm^2 (2 microcuries/cm^2) for all other alpha emitters.

(35) "Transport index (TI)" means the dimensionless number (rounded up to the next tenth) placed on the label of a package, to designate the degree of control to be exercised by the carrier during transportation. The transport index is the number determined by multiplying the maximum radiation level in millisievert (mSv) per hour at 1 meter (3.3 ft) from the external surface of the package by 100 (equivalent to the maximum radiation level in millirem per hour at 1 meter (3.3 ft)).

(36) "Type A quantity" means a quantity of radioactive material, the aggregate radioactivity of which does not exceed A1 for special form radioactive material, or A2 for normal form radioactive material, where A1 and A2 are given in Table A-1 of WAC 246-231-200, or may be determined by procedures described in WAC 246-231-200.

(37) "Type B quantity" means a quantity of radioactive material greater than a Type A quantity.

(38) "Unirradiated uranium" means uranium containing not more than 2E+3 Bq of plutonium per gram of uranium-235, not more than 9E+6 Bq of fission products per gram of

uranium-235, and not more than 5E-3 g of uranium-236 per gram of uranium-235.

(39) Uranium—natural, depleted, enriched.

(a) "Natural uranium" means uranium with the naturally occurring distribution of uranium isotopes (approximately 0.711 weight percent uranium-235, and the remainder by weight essentially uranium-238).

(b) "Depleted uranium" means uranium containing less uranium-235 than the naturally occurring distribution of uranium isotopes.

(c) "Enriched uranium" means uranium containing more uranium-235 than the naturally occurring distribution of uranium isotopes.

[Statutory Authority: RCW 70.98.050. 08-09-093, § 246-231-010, filed 4/18/08, effective 5/19/08; 99-15-105, § 246-231-010, filed 7/21/99, effective 8/21/99.]

WAC 246-231-030 Transportation of licensed material. (1) Each licensee who transports licensed material outside the site of usage, as specified in the license issued by the department, USNRC or an agreement state, or where transport is on public highways, or who delivers licensed material to a carrier for transport, shall comply with the applicable requirements of the USDOT regulations in 49 CFR 107, 171 through 180, and 390 through 397, appropriate to the mode of transport.

(a) The licensee shall particularly note USDOT regulations in the following areas:

(i) Packaging—49 CFR 173: Subparts A, B, and I.

(ii) Marking and labeling—49 CFR 172: Subpart D, 172.400 through 172.407; and Subpart E, 172.436 through 172.441.

(iii) Placarding—49 CFR 172: Subpart F, especially 172.500 through 172.519 and 172.556, and appendices B and C.

(iv) Accident reporting—49 CFR 171.15 and 171.16.

(v) Shipping papers and emergency information—49 CFR 172: Subparts C and G.

(vi) Hazardous material employee training—49 CFR 172: Subpart H.

(vii) Security plans—49 CFR 172: Subpart I.

(viii) Hazardous material shipper/carrier registration—49 CFR 107: Subpart G.

(b) The licensee shall also note USDOT regulations pertaining to the following modes of transportation:

(i) Rail—49 CFR 174: Subparts A through D and K.

(ii) Air—49 CFR 175.

(iii) Vessel—49 CFR 176: Subparts A through F and M.

(iv) Public Highway—49 CFR 177 and 390 through 397.

(2) If USDOT regulations are not applicable to a shipment of licensed material, the licensee shall conform to the standards and requirements of the USDOT specified in paragraph (1) of this section to the same extent as if the shipment or transportation were subject to USDOT regulations. A request for modification, waiver, or exemption from those requirements, and any notification referred to in those requirements, must be filed with, or made to, the Director, Office of Nuclear Material Safety and Safeguards, U.S. Nuclear Regulatory Commission, Washington, DC 20555-0001.

[Statutory Authority: RCW 70.98.050. 08-09-093, § 246-231-030, filed 4/18/08, effective 5/19/08; 99-15-105, § 246-231-030, filed 7/21/99, effective 8/21/99.]

WAC 246-231-035 Deliberate misconduct. (1) For the purpose of this chapter, deliberate misconduct by a person means an intentional act or omission that the person knows:

(a) Would constitute a violation of a requirement, procedure, instruction, contract, purchase order, or policy; or

(b) Would, if not detected, cause a violation of any rule, regulation, or order; or any term, condition, or limitation of any license or certificate issued by the department.

(2) This section applies to any:

(a) Licensee;

(b) Certificate holder;

(c) Quality assurance program approval holder;

(d) Applicant for a license, certificate, or quality assurance program approval;

(e) Contractor (including a supplier or consultant) or subcontractor, to any person identified in (d) of this subsection; or

(f) Employee of any person identified in (a) through (e) of this subsection.

(3) A person subject to this section who knowingly provides any components, materials, or other goods or services that relate to any activities subject to these regulations may not:

(a) Engage in deliberate misconduct; or

(b) Deliberately submit to the department or to a person subject to this section information that the person knows to be incomplete or inaccurate in some respect that matters to the department.

(4) A person who violates subsection (3)(a) or (b) of this section may be subject to enforcement action in accordance with the procedures in 10 CFR 2 Subpart B.

[Statutory Authority: RCW 70.98.050. 08-09-093, § 246-231-035, filed 4/18/08, effective 5/19/08.]

WAC 246-231-040 Exemptions. (1) Common and contract carriers, freight forwarders, and warehouse workers who are subject to the rules and regulations of the United States Department of Transportation (49 CFR 170 through 189) or the United States Postal Service (*Mailing Standards of the United States Postal Service, Domestic Mail Manual,* 39 CFR 111.1) are exempt from this chapter to the extent that they transport or store radioactive material in the regular course of their carriage for another or storage incident thereto. Common and contract carriers who are not subject to the rules and regulations of the United States Department of Transportation or United States Postal Service are subject to WAC 246-231-005 and other applicable sections of these regulations.

(2) Any licensee who delivers radioactive material to a carrier for transport, where such transport is subject to the regulations of the United States Postal Service, is exempt from the provisions of WAC 246-231-005.

(3) **Exemption of physicians.** Any physician as defined in WAC 246-220-010 who is licensed by the department, the USNRC or an agreement state, to dispense drugs in the practice of medicine, is exempt from WAC 246-220-030 with respect to transport by the physician of licensed material for

use in the practice of medicine. However, any physician operating under this exemption must be licensed under chapter 246-240 WAC, 10 CFR 35, or the equivalent agreement state regulations.

(4) **Exemption for low-level materials.** A licensee is exempt from all requirements of this chapter with respect to shipment or carriage of the following low-level materials:

(a) Natural material and ores containing naturally occurring radionuclides that are not intended to be processed for use of these radionuclides, provided the activity concentration of the material does not exceed ten times the values specified in WAC 246-231-200, Table A-2.

(b) Materials for which the activity concentration is not greater than the activity concentration values specified in WAC 246-231-200, Table A-2, or for which the consignment activity is not greater than the limit for an exempt consignment found in WAC 246-231-200, Table A-2.

(5) **Exemption from classification as fissile material.** Fissile material meeting at least one of the requirements in (a) through (f) of this subsection is exempt from classification as fissile material and from the fissile material package standards of 10 CFR 71.55 and 71.59, but are subject to all other requirements of this chapter, except as noted.

(a) Individual package containing 2 grams or less fissile material.

(b) Individual or bulk packaging containing 15 grams or less of fissile material provided the package has at least 200 grams of solid nonfissile material for every gram of fissile material. Lead, beryllium, graphite, and hydrogenous material enriched in deuterium may be present in the package but must not be included in determining the required mass for solid nonfissile material.

(c)(i) Low concentrations of solid fissile material commingled with solid nonfissile material, provided that:

(A) There is at least 2000 grams of solid nonfissile material for every gram of fissile material; and

(B) There is no more than 180 grams of fissile material distributed within 360 kg of contiguous nonfissile material.

(ii) Lead, beryllium, graphite, and hydrogenous material enriched in deuterium may be present in the package but must not be included in determining the required mass of solid nonfissile material.

(d) Uranium enriched in uranium-235 to a maximum of 1 percent by weight, and with total plutonium and uranium-233 content of up to 1 percent of the mass of uranium-235, provided that the mass of any beryllium, graphite, and hydrogenous material enriched in deuterium constitutes less than 5 percent of the uranium mass.

(e) Liquid solutions of uranyl nitrate enriched in uranium-235 to a maximum of 2 percent by mass, with a total plutonium and uranium-233 content not exceeding 0.002 percent of the mass of uranium, and with a minimum nitrogen to uranium atomic ratio (N/U) of 2. The material must be contained in at least a USDOT Type A package.

(f) Packages containing, individually, a total plutonium mass of not more than 1000 grams, of which not more than 20 percent by mass may consist of plutonium-239, plutonium-241, or any combination of these radionuclides.

[Statutory Authority: RCW 70.98.050. 08-09-093, § 246-231-040, filed 4/18/08, effective 5/19/08; 99-15-105, § 246-231-040, filed 7/21/99, effective 8/21/99.]

WAC 246-231-050 General licenses for carriers. (1) A general license is hereby issued to any common or contract carrier not exempted under WAC 246-231-040 to receive, possess, transport and store radioactive material in the regular course of their carriage for another or storage incident thereto, provided the transportation and storage is in accordance with the applicable requirements of the regulations, appropriate to the mode of transport, of the United States Department of Transportation.

(2) A general license is hereby issued to any private carrier to transport radioactive material, provided the transportation is in accordance with the applicable requirements of the regulations, appropriate to the mode of transport, of the United States Department of Transportation insofar as such regulations relate to the loading and storage of packages, placarding of the transporting vehicle, shipping papers, and incident reporting. Any notification of incidents referred to in those requirements shall be filed with, or made to, the department.

(3) Persons who transport radioactive material pursuant to the general licenses of subsection (1) or (2) of this section are exempt from the requirements of chapters 246-221 and 246-222 WAC to the extent that they transport radioactive material.

(4) A general license is hereby issued to deliver radioactive material to a carrier[1] for transport provided that:

(a) The licensee complies with the applicable requirements of the regulations, appropriate to the mode of transport, of the United States Department of Transportation insofar as such regulations relate to the packaging of radioactive material, to shipping papers, and to the monitoring, marking and labeling of those packages.

(b) The licensee has established procedures for opening and closing packages in which radioactive material is transported to provide safety and to assure that, prior to the delivery to a carrier for transport, each package is properly closed for transport.

(c) Prior to delivery of a package to a carrier for transport, the licensee shall assure that any special instructions needed to safely open the package are sent to or have been made available to the consignee.

(d) In addition to the requirements of the United States Department of Transportation, each package of Type A or B quantity radioactive material prepared for shipment must have the innermost container labeled as to the isotope, chemical form, number of bequerels or subunits thereof, and date of determination of activity and each innermost container shall be tested to assure that the container is properly sealed and that contamination which would cause undue hazard to public health and safety or property is not present prior to transportation. This requirement does not apply to properly packaged shipments of radioactive waste consigned to a commercial low level radioactive waste disposal facility.

Note 1- For the purpose of this regulation, licensees who transport their own licensed material as a private carrier are considered to have delivered such material to a carrier for transport.

[Statutory Authority: RCW 70.98.050. 99-15-105, § 246-231-050, filed 7/21/99, effective 8/21/99.]

WAC 246-231-060 General license—USNRC-approved package. (1) A general license is hereby issued to any licensee of the department, USNRC or an agreement state, to transport, or to deliver to a carrier for transport, licensed material in a package for which a license, certificate of compliance, or other approval has been issued by the USNRC.

(2) This general license applies only to a licensee who has a quality assurance program approved by the USNRC as satisfying the provisions of 10 CFR 71 Subpart H.

(3) This general license applies only to a licensee who:

(a) Has a copy of the certificate of compliance, or other approval of the package, and has the drawings and other documents referenced in the approval relating to the use and maintenance of the packaging and to the actions to be taken before shipment;

(b) Complies with the terms and conditions of the license, certificate, or other approval, as applicable, and the applicable requirements of 10 CFR 71 Subparts A, G, and H; and

(c) Before the licensee's first use of the package, submits in writing to: ATTN: Document Control Desk, Director, Spent Fuel Project Office, Office of Nuclear Material Safety and Safeguards, using an appropriate method listed in 10 CFR 71.1(a), the licensee's name and license number and the package identification number specified in the package approval.

(4) This general license applies only when the package approval authorizes use of the package under this general license.

(5) For a Type B or fissile material package, the design of which was approved by the USNRC before April 1, 1996, the general license is subject to the additional restrictions of 10 CFR 71.19.

[Statutory Authority: RCW 70.98.050. 08-09-093, § 246-231-060, filed 4/18/08, effective 5/19/08; 99-15-105, § 246-231-060, filed 7/21/99, effective 8/21/99.]

WAC 246-231-080 General license—DOT specification container. (1) A general license is issued to any licensee of the department, USNRC or an agreement state, to transport, or to deliver to a carrier for transport, licensed material in a specification container for fissile material or for a Type B quantity of radioactive material as specified in USDOT regulations at 49 CFR 173 and 178.

(2) This general license applies only to a licensee who has a quality assurance program approved by the USNRC as satisfying the provisions of Subpart H of the USNRC regulations, 10 CFR 71.

(3) This general license applies only to a licensee who:

(a) Has a copy of the specification; and

(b) Complies with the terms and conditions of the specification and the applicable requirements of Subparts A, G, and H of 10 CFR 71.

(4) This general license is subject to the limitation that the specification container may not be used for a shipment to a location outside the United States, except by multilateral approval, as defined in DOT regulations at 49 CFR 173.403.

(5) This section expires October 1, 2008.

[Statutory Authority: RCW 70.98.050. 08-09-093, § 246-231-080, filed 4/18/08, effective 5/19/08; 99-15-105, § 246-231-080, filed 7/21/99, effective 8/21/99.]

WAC 246-231-090 General license—Use of foreign approved package. (1) A general license is issued to any licensee of the department, USNRC or an agreement state, to transport, or to deliver to a carrier for transport, licensed material in a package the design of which has been approved in a foreign national competent authority certificate that has been revalidated by USDOT as meeting the applicable requirements of 49 CFR 171.12.

(2) Except as otherwise provided in this section, the general license applies only to a licensee who has a quality assurance program approved by the USNRC as satisfying the applicable provisions of 10 CFR 71 Subpart H.

(3) This general license applies only to shipments made to or from locations outside the United States.

(4) This general license applies only to a licensee who:

(a) Has a copy of the applicable certificate, the revalidation, and the drawings and other documents referenced in the certificate, relating to the use and maintenance of the packaging and to the actions to be taken before shipment; and

(b) Complies with the terms and conditions of the certificate and revalidation, and with the applicable requirements of 10 CFR 71 Subparts A, G, and H. With respect to the quality assurance provisions of Subpart H of 10 CFR 71, the licensee is exempt from design, construction, and fabrication considerations.

[Statutory Authority: RCW 70.98.050. 08-09-093, § 246-231-090, filed 4/18/08, effective 5/19/08; 99-15-105, § 246-231-090, filed 7/21/99, effective 8/21/99.]

WAC 246-231-094 General license—Fissile material. (1) A general license is issued to any licensee of the department, USNRC or an agreement state, to transport fissile material, or to deliver fissile material to a carrier for transport, if the material is shipped in accordance with this section. The fissile material need not be contained in a package which meets the standards of 10 CFR 71 Subparts E and F; however, the material must be contained in a Type A package. The Type A package must also meet the USDOT requirements of 49 CFR 173.417(a).

(2) The general license applies only to a licensee who has a quality assurance program approved by the USNRC as satisfying the provisions of 10 CFR 71 Subpart H.

(3) The general license applies only when a package's contents:

(a) Contain no more than a Type A quantity of radioactive material; and

(b) Contain less than 500 total grams of beryllium, graphite, or hydrogenous material enriched in deuterium.

(4) The general license applies only to packages containing fissile material that are labeled with a CSI which:

(a) Has been determined in accordance with subsection (5) of this section;

(b) Has a value less than or equal to 10; and

(c) For a shipment of multiple packages containing fissile material, the sum of the CSIs must be less than or equal to 50 (for shipment on a nonexclusive use conveyance) and

less than or equal to 100 (for shipment on an exclusive use conveyance).

(5)(a) The value for the CSI must be greater than or equal to the number calculated by the following equation:

$$CSI = 10\left[\frac{\text{grams of } ^{235}U}{X} + \frac{\text{grams of } ^{233}U}{Y} + \frac{\text{grams of Pu}}{Z}\right];$$

(b) The calculated CSI must be rounded up to the first decimal place;

(c) The values of X, Y, and Z used in the CSI equation must be taken from WAC 246-231-200 Table-1 or Table-2, as appropriate;

(d) If Table-2 is used to obtain the value of X, then the values for the terms in the equation for uranium-233 and plutonium must be assumed to be zero; and

(e) Values from Table-1 for X, Y, and Z must be used to determine the CSI if:

(i) Uranium-233 is present in the package;

(ii) The mass of plutonium exceeds 1 percent of the mass of uranium-235;

(iii) The uranium is of unknown uranium-235 enrichment or greater than 24 weight percent enrichment; or

(iv) Substances having a moderating effectiveness (i.e., an average hydrogen density greater than H_2O) (e.g., certain hydrocarbon oils or plastics) are present in any form, except as polyethylene used for packing or wrapping.

Table-1.
Mass Limits for General License Packages Containing Mixed Quantities of Fissile Material or Uranium-235 of Unknown Enrichment per WAC 246-231-094(5)

Fissile material	Fissile material mass mixed with moderating substances having an average hydrogen density less than or equal to H_2O (grams)	Fissile material mass mixed with moderating substances having an average hydrogen density greater than H_2O[a] (grams)
^{235}U (X)	60	38
^{233}U (Y)	43	27
^{239}Pu or ^{241}Pu (Z)	37	24

[a]When mixtures of moderating substances are present, the lower mass limits shall be used if more than 15 percent of the moderating substance has an average hydrogen density greater than H_2O.

Table-2.
Mass Limits for General License Packages Containing Uranium-235 of Known Enrichment per WAC 246-231-094(5)

Uranium enrichment in weight percent of ^{235}U not exceeding	Fissile material mass of ^{235}U (X) (grams)
24	60
20	63
15	67
11	72
10	76
9.5	78
9	81
8.5	82
8	85
7.5	88
7	90
6.5	93
6	97
5.5	102
5	108
4.5	114
4	120
3.5	132
3	150
2.5	180
2	246
1.5	408
1.35	480
1	1,020
0.92	1,800

[Statutory Authority: RCW 70.98.050. 08-09-093, § 246-231-094, filed 4/18/08, effective 5/19/08.]

Reviser's note: The brackets and enclosed material in the text of the above section occurred in the copy filed by the agency.

WAC 246-231-096 General license—Plutonium-beryllium special form material. (1) A general license is issued to any licensee of the department, USNRC or an agreement state, to transport fissile material in the form of plutonium-beryllium (Pu-Be) special form sealed sources, or to deliver Pu-Be sealed sources to a carrier for transport, if the material is shipped in accordance with this section. This material must be contained in a Type A package. The Type A package must also meet the USDOT requirements of 49 CFR 173.417(a).

(2) The general license applies only to a licensee who has a quality assurance program approved by the USNRC as satisfying the provisions of 10 CFR 71 Subpart H.

(3) The general license applies only when a package's contents:

(a) Contain no more than a Type A quantity of radioactive material; and

(b) Contain less than 1000 g of plutonium, provided that: Plutonium-239, plutonium-241, or any combination of these radionuclides, constitutes less than 240 g of the total quantity of plutonium in the package.

(4) The general license applies only to packages labeled with a CSI which:

(a) Has been determined in accordance with subsection (5) of this section;

(b) Has a value less than or equal to 100; and

(c) For a shipment of multiple packages containing Pu-Be sealed sources, the sum of the CSIs must be less than or equal to 50 (for shipment on a nonexclusive use conveyance) and less than or equal to 100 (for shipment on an exclusive use conveyance).

(5)(a) The value for the CSI must be greater than or equal to the number calculated by the following equation:

$$\text{CSI} = 10\left[\frac{\text{grams of } ^{239}\text{Pu} + \text{grams of } ^{241}\text{Pu}}{24}\right]; \text{ and}$$

(b) The calculated CSI must be rounded up to the first decimal place.

[Statutory Authority: RCW 70.98.050. 08-09-093, § 246-231-096, filed 4/18/08, effective 5/19/08.]

Reviser's note: The brackets and enclosed material in the text of the above section occurred in the copy filed by the agency.

WAC 246-231-098 External radiation standards for all packages. (1) Except as provided in subsection (2) of this section, each package of radioactive materials offered for transportation must be designed and prepared for shipment so that under conditions normally incident to transportation the radiation level does not exceed 2 mSv/h (200 mrem/h) at any point on the external surface of the package, and the transport index does not exceed 10.

(2) A package that exceeds the radiation level limits specified in subsection (1) of this section must be transported by exclusive use shipment only, and the radiation levels for such shipment must not exceed the following during transportation:

(a) 2 mSv/h (200 mrem/h) on the external surface of the package, unless the following conditions are met, in which case the limit is 10 mSv/h (1000 mrem/h):

(i) The shipment is made in a closed transport vehicle;

(ii) The package is secured within the vehicle so that its position remains fixed during transportation; and

(iii) There are no loading or unloading operations between the beginning and end of the transportation;

(b) 2 mSv/h (200 mrem/h) at any point on the outer surface of the vehicle, including the top and underside of the vehicle; or in the case of a flat-bed style vehicle, at any point on the vertical planes projected from the outer edges of the vehicle, on the upper surface of the load or enclosure, if used, and on the lower external surface of the vehicle; and

(c) 0.1 mSv/h (10 mrem/h) at any point 2 meters (80 in) from the outer lateral surfaces of the vehicle (excluding the top and underside of the vehicle); or in the case of a flat-bed style vehicle, at any point 2 meters (6.6 feet) from the vertical planes projected by the outer edges of the vehicle (excluding the top and underside of the vehicle); and

(d) 0.02 mSv/h (2 mrem/h) in any normally occupied space, except that this provision does not apply to private carriers, if exposed personnel under their control wear radiation dosimetry devices in conformance with WAC 246-221-090 and 246-221-100.

(3) For shipments made under the provisions of subsection (2) of this section, the shipper shall provide specific written instructions to the carrier for maintenance of the exclusive use shipment controls. The instructions must be included with the shipping paper information.

(4) The written instructions required for exclusive use shipments must be sufficient so that, when followed, they will cause the carrier to avoid actions that will unnecessarily delay delivery or unnecessarily result in increased radiation levels or radiation exposures to transport workers or members of the general public.

[Statutory Authority: RCW 70.98.050. 08-09-093, § 246-231-098, filed 4/18/08, effective 5/19/08.]

WAC 246-231-100 Applicability of operating controls and procedures. A licensee subject to this chapter, who, under a general or specific license, transports licensed material or delivers licensed material to a carrier for transport, shall comply with the requirements of 10 CFR 71 Subpart G, with the quality assurance requirements of 10 CFR 71 Subpart H, and with the general provisions of 10 CFR 71 Subpart A.

[Statutory Authority: RCW 70.98.050. 08-09-093, § 246-231-100, filed 4/18/08, effective 5/19/08; 99-15-105, § 246-231-100, filed 7/21/99, effective 8/21/99.]

WAC 246-231-103 Assumptions as to unknown properties. When the isotopic abundance, mass, concentration, degree of irradiation, degree of moderation, or other pertinent property of fissile material in any package is not known, the licensee shall package the fissile material as if the unknown properties have credible values that will cause the maximum neutron multiplication.

[Statutory Authority: RCW 70.98.050. 08-09-093, § 246-231-103, filed 4/18/08, effective 5/19/08.]

WAC 246-231-106 Preliminary determinations. Before the first use of any packaging for the shipment of licensed material:

(1) The licensee shall ascertain that there are no cracks, pinholes, uncontrolled voids, or other defects that could significantly reduce the effectiveness of the packaging;

(2) Where the maximum normal operating pressure will exceed 35 kPa (5 lbs/in^2) gauge, the licensee shall test the containment system at an internal pressure at least fifty percent higher than the maximum normal operating pressure, to verify the capability of that system to maintain its structural integrity at that pressure; and

(3) The licensee shall conspicuously and durably mark the packaging with its model number, serial number, gross weight, and a package identification number assigned by the USNRC. Before applying the model number, the licensee shall determine that the packaging has been fabricated in accordance with the design approved by the U.S. Nuclear Regulatory Commission.

[Statutory Authority: RCW 70.98.050. 08-09-093, § 246-231-106, filed 4/18/08, effective 5/19/08.]

WAC 246-231-110 Routine determinations. Before each shipment of licensed material, the licensee shall ensure that the package with its contents satisfies the applicable requirements of this chapter and of the license. The licensee shall determine that:

(1) The package is proper for the contents to be shipped;

(2) The package is in unimpaired physical condition except for superficial defects such as marks or dents;

(3) Each closure device of the packaging, including any required gasket, is properly installed and secured and free of defects;

(4) Any system for containing liquid is adequately sealed and has adequate space or other specified provision for expansion of the liquid;

(5) Any pressure relief device is operable and set in accordance with written procedures;

(6) The package has been loaded and closed in accordance with written procedures;

(7) For fissile material, any moderator or neutron absorber, if required, is present and in proper condition;

(8) Any structural part of the package that could be used to lift or tie down the package during transport is rendered inoperable for that purpose, unless it satisfies the design requirements of 10 CFR 71.45;

(9) The level of nonfixed (removable) radioactive contamination on the external surfaces of each package offered for shipment is as low as reasonably achievable, and within the limits specified in USDOT regulations in 49 CFR 173.443;

(10) External radiation levels around the package and around the vehicle, if applicable, will not exceed the limits specified in WAC 246-231-098 at any time during transportation; and

(11) Accessible package surface temperatures will not exceed the limits specified in 10 CFR 71.43(g) at any time during transportation.

[Statutory Authority: RCW 70.98.050. 08-09-093, § 246-231-110, filed 4/18/08, effective 5/19/08; 99-15-105, § 246-231-110, filed 7/21/99, effective 8/21/99.]

WAC 246-231-120 Air transport of plutonium. (1) Notwithstanding the provisions of any general licenses and notwithstanding any exemptions stated directly in this chapter or included indirectly by citation of 49 CFR chapter I, as may be applicable, the licensee shall assure that plutonium in any form, whether for import, export, or domestic shipment, is not transported by air or delivered to a carrier for air transport unless:

(a) The plutonium is contained in a medical device designed for individual human application; or

(b) The plutonium is contained in a material in which the specific activity is less than or equal to the activity concentration values for plutonium specified in WAC 246-231-200, Table A-2, and in which the radioactivity is essentially uniformly distributed; or

(c) The plutonium is shipped in a single package containing no more than an A2 quantity of plutonium in any isotope or form, and is shipped in accordance with WAC 246-231-030; or

(d) The plutonium is shipped in a package specifically authorized for the shipment of plutonium by air in the Certificate of Compliance for that package issued by the U.S. Nuclear Regulatory Commission.

(2) Nothing in subsection (1) of this section is to be interpreted as removing or diminishing the requirements of USNRC regulations 10 CFR 73.24.

(3) For a shipment of plutonium by air which is subject to subsection (1)(d) of this section, the licensee shall, through special arrangement with the carrier, require compliance with 49 CFR 175.704 USDOT regulations applicable to the air transport of plutonium.

[Statutory Authority: RCW 70.98.050. 08-09-093, § 246-231-120, filed 4/18/08, effective 5/19/08; 99-15-105, § 246-231-120, filed 7/21/99, effective 8/21/99.]

WAC 246-231-130 Opening instructions. Before delivery of a package to a carrier for transport, the licensee shall ensure that any special instructions needed to safely open the package have been sent to, or otherwise made available to, the consignee for the consignee's use in accordance with WAC 246-221-160.

[Statutory Authority: RCW 70.98.050. 99-15-105, § 246-231-130, filed 7/21/99, effective 8/21/99.]

WAC 246-231-133 Public inspection of application. Applications for approval of a package design under this chapter, which are submitted to the USNRC, may be made available for public inspection, in accordance with provisions of 10 CFR 2 and 9. This includes an application to amend or revise an existing package design, any associated documents and drawings submitted with the application, and any responses to USNRC requests for additional information.

[Statutory Authority: RCW 70.98.050. 08-09-093, § 246-231-133, filed 4/18/08, effective 5/19/08.]

WAC 246-231-136 Records. (1) Each licensee shall maintain, for a period of three years after shipment, a record of each shipment of licensed material not exempt under WAC 246-231-040(4), showing where applicable:

(a) Identification of the packaging by model number and serial number;

(b) Verification that there are no significant defects in the packaging, as shipped;

(c) Volume and identification of coolant;

(d) Type and quantity of licensed material in each package, and the total quantity of each shipment;

(e) For each item of irradiated fissile material:

(i) Identification by model number and serial number;

(ii) Irradiation and decay history to the extent appropriate to demonstrate that its nuclear and thermal characteristics comply with license conditions; and

(iii) Any abnormal or unusual condition relevant to radiation safety;

(f) Date of the shipment;

(g) For fissile packages and for Type B packages, any special controls exercised;

(h) Name and address of the transferee;

(i) Address to which the shipment was made; and

(j) Results of the determinations required by WAC 246-231-110 and by the conditions of the package approval.

(2) Each certificate holder shall maintain, for a period of three years after the life of the packaging to which they apply, records identifying the packaging by model number, serial number, and date of manufacture.

(3) The licensee, certificate holder, and an applicant for a CoC, shall make available to the USNRC for inspection, upon reasonable notice, all records required by 10 CFR

71.91. Records are only valid if stamped, initialed, or signed and dated by authorized personnel, or otherwise authenticated.

(4) The licensee, certificate holder, and an applicant for a CoC shall maintain sufficient written records to furnish evidence of the quality of packaging. The records to be maintained include results of the determinations required by WAC 246-231-106; design, fabrication, and assembly records; results of reviews, inspections, tests, and audits; results of monitoring work performance and materials analyses; and results of maintenance, modification, and repair activities. Inspection, test, and audit records must identify the inspector or data recorder, the type of observation, the results, the acceptability, and the action taken in connection with any deficiencies noted. These records must be retained for three years after the life of the packaging to which they apply.

[Statutory Authority: RCW 70.98.050. 08-09-093, § 246-231-136, filed 4/18/08, effective 5/19/08.]

WAC 246-231-140 Advance notification of shipment of irradiated reactor fuel and nuclear waste. (1) As specified in subsections (2), (3), and (4) of this section, each licensee shall provide advance notification to the governor of a state, or the governor's designee, of the shipment of licensed material, through, or across the boundary of the state, before the transport, or delivery to a carrier, for transport, of licensed material outside the confines of the licensee's plant or other place of use or storage.

(2) Advance notification is required under this section for shipments of irradiated reactor fuel in quantities less than that subject to advance notification requirements of USNRC regulations 10 CFR 73.37(f). Advance notification is also required under this section for shipment of licensed material, other than irradiated fuel, meeting the following three conditions:

(a) The licensed material is required by this section to be in Type B packaging for transportation;

(b) The licensed material is being transported to or across a state boundary en route to a disposal facility or to a collection point for transport to a disposal facility; and

(c) The quantity of licensed material in a single package exceeds the least of the following:

(i) 3000 times the A1 value of the radionuclides as specified in WAC 246-231-200, Table A-1 for special form radioactive material;

(ii) 3000 times the A2 value of the radionuclides as specified in WAC 246-231-200, Table A-1 for normal form radioactive material; or

(iii) 1000 TBq (27,000 Ci).

(3) Procedures for submitting advance notification.

(a) The notification must be made in writing to the office of each appropriate governor or governor's designee and to the Director, Division of Nuclear Security, Office of Nuclear Security and Incident Response.

(b) A notification delivered by mail must be postmarked at least seven days before the beginning of the seven-day period during which departure of the shipment is estimated to occur.

(c) A notification delivered by any other means than mail must reach the office of the governor or of the governor's designee at least four days before the beginning of the seven-day period during which departure of the shipment is estimated to occur.

(i) A list of the names and mailing addresses of the governors' designees receiving advance notification of transportation of nuclear waste was published in the *Federal Register* on June 30, 1995, (60 FR 34306).

(ii) The list will be published annually in the *Federal Register* on or about June 30 to reflect any changes in information.

(iii) A list of the names and mailing addresses of the governors' designees is available on request from the Director, Office of State Programs, U.S. Nuclear Regulatory Commission, Washington, DC 20555-0001.

(d) The licensee shall retain a copy of the notification as a record for three years.

(4) Information to be furnished in advance notification of shipment. Each advance notification of shipment of irradiated reactor fuel or nuclear waste must contain the following information:

(a) The name, address, and telephone number of the shipper, carrier, and receiver of the irradiated reactor fuel or nuclear waste shipment;

(b) A description of the irradiated reactor fuel or nuclear waste contained in the shipment, as specified in the regulations of USDOT in 49 CFR 172.202 and 172.203(d);

(c) The point of origin of the shipment and the seven-day period during which departure of the shipment is estimated to occur;

(d) The seven-day period during which arrival of the shipment at state boundaries is estimated to occur;

(e) The destination of the shipment, and the seven-day period during which arrival of the shipment is estimated to occur; and

(f) A point of contact, with a telephone number, for current shipment information.

(5) Revision notice. A licensee who finds that schedule information previously furnished to a governor or governor's designee, in accordance with this section, will not be met, shall telephone a responsible individual in the office of the governor of the state or of the governor's designee and inform that individual of the extent of the delay beyond the schedule originally reported. The licensee shall maintain a record of the name of the individual contacted for three years.

(6) Cancellation notice.

(a) Each licensee who cancels an irradiated reactor fuel or nuclear waste shipment for which advance notification has been sent shall send a cancellation notice to the governor of each state or to the governor's designee previously notified, and to the Director, Division of Nuclear Security, Office of Nuclear Security and Incident Response.

(b) The licensee shall state in the notice that it is a cancellation and identify the advance notification that is being canceled. The licensee shall retain a copy of the notice as a record for three years.

[Statutory Authority: RCW 70.98.050. 08-09-093, § 246-231-140, filed 4/18/08, effective 5/19/08; 99-15-105, § 246-231-140, filed 7/21/99, effective 8/21/99.]

WAC 246-231-150 Quality assurance requirements. (1) Purpose. Quality assurance requirements apply to design, purchase, fabrication, handling, shipping, storing, cleaning,

assembly, inspection, testing, operation, maintenance, repair, and modification of components of packaging that are important to safety. As used in this chapter, "quality assurance" comprises all those planned and systematic actions necessary to provide adequate confidence that a system or component will perform satisfactorily in service. Quality assurance includes quality control, which comprises those quality assurance actions related to control of the physical characteristics and quality of the material or component to predetermined requirements. The licensee, certificate holder, and applicant for a CoC are responsible for the quality assurance requirements as they apply to design, fabrication, testing, and modification of packaging. Each licensee is responsible for the quality assurance provision which applies to its use of packaging for the shipment of licensed material subject to this chapter.

(2) Establishment of program. Each licensee, certificate holder, and applicant for a CoC shall establish, maintain, and execute a quality assurance program satisfying each of the applicable criteria in 10 CFR 71.101 through 71.137 and satisfying any specific provisions that are applicable to the licensee's activities including procurement of packaging. The licensee, certificate holder, and applicant for a CoC shall execute the applicable criteria in a graded approach to an extent that is commensurate with the quality assurance requirement's importance to safety.

(3) Approval of program. Before the use of any package for the shipment of licensed material subject to this chapter, each licensee shall obtain USNRC approval of its quality assurance program. Using an appropriate method listed in 10 CFR 71.1(a), each licensee shall file a description of its quality assurance program, including a discussion of which requirements of 10 CFR 71 Subpart H are applicable and how they will be satisfied, by submitting the description to: ATTN: Document Control Desk, Director, Spent Fuel Project Office, Office of Nuclear Material Safety and Safeguards.

(4) Radiography containers. A program for transport container inspection and maintenance limited to radiographic exposure devices, source changers, or packages transporting these devices and meeting the requirements of WAC 246-243-120(2), is deemed to satisfy the requirements of WAC 246-231-060(2) and 246-231-150(2).

[Statutory Authority: RCW 70.98.050. 08-09-093, § 246-231-150, filed 4/18/08, effective 5/19/08.]

WAC 246-231-160 Quality assurance organization. (1) The licensee,[2] certificate holder, and applicant for a CoC shall be responsible for the establishment and execution of the quality assurance program. The licensee, certificate holder, and applicant for a CoC may delegate to others, such as contractors, agents, or consultants, the work of establishing and executing the quality assurance program, or any part of the quality assurance program, but shall retain responsibility for the program. These activities include performing the functions associated with attaining quality objectives and the quality assurance functions.

[2] While the term "licensee" is used in these criteria, the requirements are applicable to whatever design, fabrication, assembly, and testing of the package is accomplished with respect to a package before the time a package approval is issued.

(2) The quality assurance functions are:

(a) Assuring that an appropriate quality assurance program is established and effectively executed; and

(b) Verifying, by procedures such as checking, auditing, and inspection, that activities affecting the functions that are important to safety have been correctly performed.

(3) The persons and organizations performing quality assurance functions must have sufficient authority and organizational freedom to:

(a) Identify quality problems;

(b) Initiate, recommend, or provide solutions; and

(c) Verify implementation of solutions.

(4) The persons and organizations performing quality assurance functions shall report to a management level that assures that the required authority and organizational freedom, including sufficient independence from cost and schedule, when opposed to safety considerations, are provided.

(5) Because of the many variables involved, such as the number of personnel, the type of activity being performed, and the location or locations where activities are performed, the organizational structure for executing the quality assurance program may take various forms, provided that the persons and organizations assigned the quality assurance functions have the required authority and organizational freedom.

(6) Irrespective of the organizational structure, the individual(s) assigned the responsibility for assuring effective execution of any portion of the quality assurance program, at any location where activities subject to this chapter are being performed, must have direct access to the levels of management necessary to perform this function.

[Statutory Authority: RCW 70.98.050. 08-09-093, § 246-231-160, filed 4/18/08, effective 5/19/08.]

WAC 246-231-170 Quality assurance program. (1) The licensee, certificate holder, and applicant for a CoC shall establish, at the earliest practicable time consistent with the schedule for accomplishing the activities, a quality assurance program that complies with the requirements of 10 CFR 71.101 through 71.137. The licensee, certificate holder, and applicant for a CoC shall document the quality assurance program by written procedures or instructions and shall carry out the program in accordance with those procedures throughout the period during which the packaging is used. The licensee, certificate holder, and applicant for a CoC shall identify the material and components to be covered by the quality assurance program, the major organizations participating in the program, and the designated functions of these organizations.

(2) The licensee, certificate holder, and applicant for a CoC, through its quality assurance program, shall provide control over activities affecting the quality of the identified materials and components to an extent consistent with their importance to safety, and as necessary to assure conformance to the approved design of each individual package used for the shipment of radioactive material. The licensee, certificate holder, and applicant for a CoC shall assure that activities affecting quality are accomplished under suitably controlled conditions. Controlled conditions include the use of appropriate equipment; suitable environmental conditions for accomplishing the activity, such as adequate cleanliness; and assurance that all prerequisites for the given activity have been satisfied. The licensee, certificate holder, and applicant for a

CoC shall take into account the need for special controls, processes, test equipment, tools, and skills to attain the required quality, and the need for verification of quality by inspection and test.

(3) The licensee, certificate holder, and applicant for a CoC shall base the requirements and procedures of its quality assurance program on the following considerations concerning the complexity and proposed use of the package and its components:

(a) The impact of malfunction or failure of the item to safety;

(b) The design and fabrication complexity or uniqueness of the item;

(c) The need for special controls and surveillance over processes and equipment;

(d) The degree to which functional compliance can be demonstrated by inspection or test; and

(e) The quality history and degree of standardization of the item.

(4) The licensee, certificate holder, and applicant for a CoC shall provide for indoctrination and training of personnel performing activities affecting quality, as necessary to assure that suitable proficiency is achieved and maintained. The licensee, certificate holder, and applicant for a CoC shall review the status and adequacy of the quality assurance program at established intervals. Management of other organizations participating in the quality assurance program shall review regularly the status and adequacy of that part of the quality assurance program they are executing.

[Statutory Authority: RCW 70.98.050. 08-09-093, § 246-231-170, filed 4/18/08, effective 5/19/08.]

WAC 246-231-178 Handling, storage, and shipping control. The licensee, certificate holder, and applicant for a CoC shall establish measures to control, in accordance with instructions, the handling, storage, shipping, cleaning, and preservation of materials and equipment to be used in packaging to prevent damage or deterioration. When necessary for particular products, special protective environments, such as inert gas atmosphere, and specific moisture content and temperature levels must be specified and provided.

[Statutory Authority: RCW 70.98.050. 08-09-093, § 246-231-178, filed 4/18/08, effective 5/19/08.]

WAC 246-231-180 Inspection, test, and operating status. (1) The licensee, certificate holder, and applicant for a CoC shall establish measures to indicate, by the use of markings such as stamps, tags, labels, routing cards, or other suitable means, the status of inspections and tests performed upon individual items of the packaging. These measures must provide for the identification of items that have satisfactorily passed required inspections and tests, where necessary to preclude inadvertent bypassing of the inspections and tests.

(2) The licensee shall establish measures to identify the operating status of components of the packaging, such as tagging valves and switches, to prevent inadvertent operation.

[Statutory Authority: RCW 70.98.050. 08-09-093, § 246-231-180, filed 4/18/08, effective 5/19/08.]

WAC 246-231-182 Nonconforming materials, parts, or components. The licensee, certificate holder, and applicant for a CoC shall establish measures to control materials, parts, or components that do not conform to the licensee's requirements to prevent their inadvertent use or installation. These measures must include, as appropriate, procedures for identification, documentation, segregation, disposition, and notification to affected organizations. Nonconforming items must be reviewed and accepted, rejected, repaired, or reworked in accordance with documented procedures.

[Statutory Authority: RCW 70.98.050. 08-09-093, § 246-231-182, filed 4/18/08, effective 5/19/08.]

WAC 246-231-184 Corrective action. The licensee, certificate holder, and applicant for a CoC shall establish measures to assure that conditions adverse to quality, such as deficiencies, deviations, defective material and equipment, and nonconformance, are promptly identified and corrected. In the case of a significant condition adverse to quality, the measures must assure that the cause of the condition is determined and corrective action taken to preclude repetition. The identification of the significant condition adverse to quality, the cause of the condition, and the corrective action taken must be documented and reported to appropriate levels of management.

[Statutory Authority: RCW 70.98.050. 08-09-093, § 246-231-184, filed 4/18/08, effective 5/19/08.]

WAC 246-231-186 Quality assurance records. The licensee, certificate holder, and applicant for a CoC shall maintain sufficient written records to describe the activities affecting quality. The records must include the instructions, procedures, and drawings required by 10 CFR 71.111 to prescribe quality assurance activities and must include closely related specifications such as required qualifications of personnel, procedures, and equipment. The records must include the instructions or procedures which establish a records retention program that is consistent with applicable regulations and designates factors such as duration, location, and assigned responsibility. The licensee, certificate holder, and applicant for a CoC shall retain these records for three years beyond the date when the licensee, certificate holder, and applicant for a CoC last engaged in the activity for which the quality assurance program was developed. If any portion of the written procedures or instructions is superseded, the licensee, certificate holder, and applicant for a CoC shall retain the superseded material for three years after it is superseded.

[Statutory Authority: RCW 70.98.050. 08-09-093, § 246-231-186, filed 4/18/08, effective 5/19/08.]

WAC 246-231-188 Audits. The licensee, certificate holder, and applicant for a CoC shall carry out a comprehensive system of planned and periodic audits to verify compliance with all aspects of the quality assurance program and to determine the effectiveness of the program. The audits must be performed in accordance with written procedures or checklists by appropriately trained personnel not having direct responsibilities in the areas being audited. Audited results must be documented and reviewed by management having responsibility in the area audited. Follow-up action,

including reaudit of deficient areas, must be taken where indicated.

[Statutory Authority: RCW 70.98.050. 08-09-093, § 246-231-188, filed 4/18/08, effective 5/19/08.]

WAC 246-231-200 Appendix A—Determination of A1 and A2. (1) Values of A1 and A2 for individual radionuclides, which are the basis for many activity limits elsewhere in these regulations, are given in this section, Table A-1. The curie (Ci) values specified are obtained by converting from the Terabecquerel (TBq) value. The Terabecquerel values are the regulatory standard. The curie values are for information only and are not intended to be the regulatory standard. Where values of A1 or A2 are unlimited, it is for radiation control purposes only. For nuclear criticality safety, some materials are subject to controls placed on fissile material.

(2)(a) For individual radionuclides whose identities are known, but which are not listed in this section, Table A-1, the A1 and A2 values contained in this section, Table A-3 may be used. Otherwise, the licensee shall obtain prior USNRC approval of the A1 and A2 values for radionuclides not listed in this section, Table A-1, before shipping the material.

(b) For individual radionuclides whose identities are known, but which are not listed in this section, Table A-2, the exempt material activity concentration and exempt consignment activity values contained in this section, Table A-3 may be used. Otherwise, the licensee shall obtain prior USNRC approval of the exempt material activity concentration and exempt consignment activity values for radionuclides not listed in this section, Table A-2, before shipping the material.

(c) The licensee shall submit requests for prior approval, described under (a) and (b) of this subsection, to the USNRC in accordance with 10 CFR 71.1.

(3) In the calculations of A1 and A2 for a radionuclide not in this section, Table A-1, a single radioactive decay chain, in which radionuclides are present in their naturally occurring proportions, and in which no daughter radionuclide has a half-life either longer than ten days, or longer than that of the parent radionuclide, shall be considered as a single radionuclide, and the activity to be taken into account, and the A1 or A2 value to be applied shall be those corresponding to the parent radionuclide of that chain. In the case of radioactive decay chains in which any daughter radionuclide has a half-life either longer than ten days, or greater than that of the parent radionuclide, the parent and those daughter radionuclides shall be considered as mixtures of different radionuclides.

(4) For mixtures of radionuclides whose identities and respective activities are known, the following conditions apply:

(a) For special form radioactive material, the maximum quantity transported in a Type A package:

$$\sum_{I} \frac{B(i)}{A1(i)} \quad \text{less than or equal to } 1$$

Where B(i) is the activity of radionuclide I, and A1(i) is the A1 value for radionuclide I.

(b) For normal form radioactive material, the maximum quantity transported in a Type A package:

$$\sum_{I} \frac{B(i)}{A2(i)} \quad \text{less than or equal to } 1$$

Where B(i) is the activity of radionuclide I and A2(i) is the A2 value for radionuclide I.

(c) Alternatively, the A1 value for mixtures of special form material may be determined as follows:

$$A1 \text{ for mixture} = \frac{1}{\sum_{I} \frac{f(i)}{A1(i)}}$$

Where f(i) is the fraction of activity for radionuclide I in the mixture and A1(i) is the appropriate A1 value for radionuclide I.

(d) Alternatively, the A2 value for mixtures of normal form material may be determined as follows:

$$A2 \text{ for mixture} = \frac{1}{\sum_{I} \frac{f(i)}{A2(i)}}$$

Where f(i) is the fraction of activity for radionuclide I in the mixture and A2(i) is the appropriate A2 value for radionuclide I.

(e) The exempt activity concentration for mixtures of nuclides may be determined as follows:

$$\text{Exempt activity concentration for mixture} = \frac{1}{\sum_{I} \frac{f(i)}{[A](i)}}$$

Where f(i) is the fraction of activity concentration of radionuclide I in the mixture, and A is the activity concentration f material containing radionuclide I.

(f) The activity limit for an exempt consignment for mixtures of radionuclides may be determined as follows:

$$\text{Exempt consignment activity limit for mixture} = \frac{1}{\sum_{I} \frac{f(i)}{A(i)}}$$

Where f(i) is the fraction of activity of radionuclide I in the mixture, and A is the activity limit for exempt consignments for radionuclide I.

(5) When the identity of each radionuclide is known, but the individual activities of some of the radionuclides are not

known, the radionuclides may be grouped and the lowest A1 or A2 value, as appropriate, for the radionuclides in each group may be used in applying the formulas in subsection (4) of this section. Groups may be based on the total alpha activity and the total beta/gamma activity when these are known, using the lowest A1 or A2 values for the alpha emitters and beta/gamma emitters.

Table A-1.—A1 and A2 Values for Radionuclides

Symbol of radionuclide	Element and atomic number	A1 (TBq)	A1 (Ci)[b]	A2 (TBq)	A2 (Ci)[b]	Specific activity	
						(TBq/g)	(Ci/g)
Ac-225 (a)	Actinium (89)	$8.0X10^{-1}$	$2.2X10^{1}$	$6.0X10^{-3}$	$1.6X10^{-1}$	$2.1X10^{3}$	$5.8X10^{4}$
Ac-227 (a)		$9.0X10^{-1}$	$2.4X10^{1}$	$9.0X10^{-5}$	$2.4X10^{-3}$	2.7	$7.2X10^{1}$
Ac-228		$6.0X10^{-1}$	$1.6X10^{1}$	$5.0X10^{-1}$	$1.4X10^{1}$	$8.4X10^{4}$	$2.2X10^{6}$
Ag-105	Silver (47)	2.0	$5.4X10^{1}$	2.0	$5.4X10^{1}$	$1.1X10^{3}$	$3.0X10^{4}$
Ag-108m (a)		$7.0X10^{-1}$	$1.9X10^{1}$	$7.0X10^{-1}$	$1.9X10^{1}$	$9.7X10^{-1}$	$2.6X10^{1}$
Ag-110m (a)		$4.0X10^{-1}$	$1.1X10^{1}$	$4.0X10^{-1}$	$1.1X10^{1}$	$1.8X10^{2}$	$4.7X10^{3}$
Ag-111		2.0	$5.4X10^{1}$	$6.0X10^{-1}$	$1.6X10^{1}$	$5.8X10^{3}$	$1.6X10^{5}$
Al-26	Aluminum (13)	$1.0X10^{-1}$	2.7	$1.0X10^{-1}$	2.7	$7.0X10^{-4}$	$1.9X10^{-2}$
Am-241	Americium (95)	$1.0X10^{1}$	$2.7X10^{2}$	$1.0X10^{-3}$	$2.7X10^{-2}$	$1.3X10^{-1}$	3.4
Am-242m (a)		$1.0X10^{1}$	$2.7X10^{2}$	$1.0X10^{-3}$	$2.7X10^{-2}$	$3.6X10^{-1}$	$1.0X10^{1}$
Am-243 (a)		5.0	$1.4X10^{2}$	$1.0X10^{-3}$	$2.7X10^{-2}$	$7.4X10^{-3}$	$2.0X10^{-1}$
Ar-37	Argon (18)	$4.0X10^{1}$	$1.1X10^{3}$	$4.0X10^{1}$	$1.1X10^{3}$	$3.7X10^{3}$	$9.9X10^{4}$
Ar-39		$4.0X10^{1}$	$1.1X10^{3}$	$2.0X10^{1}$	$5.4X10^{2}$	1.3	$3.4X10^{1}$
Ar-41		$3.0X10^{-1}$	8.1	$3.0X10^{-1}$	8.1	$1.5X10^{6}$	$4.2X10^{7}$
As-72	Arsenic (33)	$3.0X10^{-1}$	8.1	$3.0X10^{-1}$	8.1	$6.2X10^{4}$	$1.7X10^{6}$
As-73		$4.0X10^{1}$	$1.1X10^{3}$	$4.0X10^{1}$	$1.1X10^{3}$	$8.2X10^{2}$	$2.2X10^{4}$
As-74		1.0	$2.7X10^{1}$	$9.0X10^{-1}$	$2.4X10^{1}$	$3.7X10^{3}$	$9.9X10^{4}$
As-76		$3.0X10^{-1}$	8.1	$3.0X10^{-1}$	8.1	$5.8X10^{4}$	$1.6X10^{6}$
As-77		$2.0X10^{1}$	$5.4X10^{2}$	$7.0X10^{-1}$	$1.9X10^{1}$	$3.9X10^{4}$	$1.0X10^{6}$
At-211 (a)	Astatine (85)	$2.0X10^{1}$	$5.4X10^{2}$	$5.0X10^{-1}$	$1.4X10^{1}$	$7.6X10^{4}$	$2.1X10^{6}$
Au-193	Gold (79)	7.0	$1.9X10^{2}$	2.0	$5.4X10^{1}$	$3.4X10^{4}$	$9.2X10^{5}$
Au-194		1.0	$2.7X10^{1}$	1.0	$2.7X10^{1}$	$1.5X10^{4}$	$4.1X10^{5}$
Au-195		$1.0X10^{1}$	$2.7X10^{2}$	6.0	$1.6X10^{2}$	$1.4X10^{2}$	$3.7X10^{3}$
Au-198		1.0	$2.7X10^{1}$	$6.0X10^{-1}$	$1.6X10^{1}$	$9.0X10^{3}$	$2.4X10^{5}$
Au-199		$1.0X10^{1}$	$2.7X10^{2}$	$6.0X10^{-1}$	$1.6X10^{1}$	$7.7X10^{3}$	$2.1X10^{5}$
Ba-131 (a)	Barium (56)	2.0	$5.4X10^{1}$	2.0	$5.4X10^{1}$	$3.1X10^{3}$	$8.4X10^{4}$
Ba-133		3.0	$8.1X10^{1}$	3.0	$8.1X10^{1}$	9.4	$2.6X10^{2}$
Ba-133m		$2.0X10^{1}$	$5.4X10^{2}$	$6.0X10^{-1}$	$1.6X10^{1}$	$2.2X10^{4}$	$6.1X10^{5}$
Ba-140 (a)		$5.0X10^{-1}$	$1.4X10^{1}$	$3.0X10^{-1}$	8.1	$2.7X10^{3}$	$7.3X10^{4}$
Be-7	Beryllium (4)	$2.0X10^{1}$	$5.4X10^{2}$	$2.0X10^{1}$	$5.4X10^{2}$	$1.3X10^{4}$	$3.5X10^{5}$
Be-10		$4.0X10^{1}$	$1.1X10^{3}$	$6.0X10^{-1}$	$1.6X10^{1}$	$8.3X10^{-4}$	$2.2X10^{-2}$
Bi-205	Bismuth (83)	$7.0X10^{-1}$	$1.9X10^{1}$	$7.0X10^{-1}$	$1.9X10^{1}$	$1.5X10^{3}$	$4.2X10^{4}$
Bi-206		$3.0X10^{-1}$	8.1	$3.0X10^{-1}$	8.1	$3.8X10^{3}$	$1.0X10^{5}$
Bi-207		$7.0X10^{-1}$	$1.9X10^{1}$	$7.0X10^{-1}$	$1.9X10^{1}$	1.9	$5.2X10^{1}$
Bi-210		1.0	$2.7X10^{1}$	$6.0X10^{-1}$	$1.6X10^{1}$	$4.6X10^{3}$	$1.2X10^{5}$
Bi-210m (a)		$6.0X10^{-1}$	$1.6X10^{1}$	$2.0X10^{-2}$	$5.4X10^{-1}$	$2.1X10^{-5}$	$5.7X10^{-4}$
Bi-212 (a)		$7.0X10^{-1}$	$1.9X10^{1}$	$6.0X10^{-1}$	$1.6X10^{1}$	$5.4X10^{5}$	$1.5X10^{7}$
Bk-247	Berkelium (97)	8.0	$2.2X10^{2}$	$8.0X10^{-4}$	$2.2X10^{-2}$	$3.8X10^{-2}$	1.0
Bk-249 (a)		$4.0X10^{1}$	$1.1X10^{3}$	$3.0X10^{-1}$	8.1	$6.1X10^{1}$	$1.6X10^{3}$
Br-76	Bromine (35)	$4.0X10^{-1}$	$1.1X10^{1}$	$4.0X10^{-1}$	$1.1X10^{1}$	$9.4X10^{4}$	$2.5X10^{6}$
Br-77		3.0	$8.1X10^{1}$	3.0	$8.1X10^{1}$	$2.6X10^{4}$	$7.1X10^{5}$
Br-82		$4.0X10^{-1}$	$1.1X10^{1}$	$4.0X10^{-1}$	$1.1X10^{1}$	$4.0X10^{4}$	$1.1X10^{6}$
C-11	Carbon (6)	1.0	$2.7X10^{1}$	$6.0X10^{-1}$	$1.6X10^{1}$	$3.1X10^{7}$	$8.4X10^{8}$
C-14		$4.0X10^{1}$	$1.1X10^{3}$	3.0	$8.1X10^{1}$	$1.6X10^{-1}$	4.5
Ca-41	Calcium (20)	Unlimited	Unlimited	Unlimited	Unlimited	$3.1X10^{-3}$	$8.5X10^{-2}$
Ca-45		$4.0X10^{1}$	$1.1X10^{3}$	1.0	$2.7X10^{1}$	$6.6X10^{2}$	$1.8X10^{4}$
Ca-47 (a)		3.0	$8.1X10^{1}$	$3.0X10^{-1}$	8.1	$2.3X10^{4}$	$6.1X10^{5}$
Cd-109	Cadmium (48)	$3.0X10^{1}$	$8.1X10^{2}$	2.0	$5.4X10^{1}$	$9.6X10^{1}$	$2.6X10^{3}$
Cd-113m		$4.0X10^{1}$	$1.1X10^{3}$	$5.0X10^{-1}$	$1.4X10^{1}$	8.3	$2.2X10^{2}$
Cd-115 (a)		3.0	$8.1X10^{1}$	$4.0X10^{-1}$	$1.1X10^{1}$	$1.9X10^{4}$	$5.1X10^{5}$
Cd-115m		$5.0X10^{-1}$	$1.4X10^{1}$	$5.0X10^{-1}$	$1.4X10^{1}$	$9.4X10^{2}$	$2.5X10^{4}$
Ce-139	Cerium (58)	7.0	$1.9X10^{2}$	2.0	$5.4X10^{1}$	$2.5X10^{2}$	$6.8X10^{3}$
Ce-141		$2.0X10^{1}$	$5.4X10^{2}$	$6.0X10^{-1}$	$1.6X10^{1}$	$1.1X10^{3}$	$2.8X10^{4}$
Ce-143		$9.0X10^{-1}$	$2.4X10^{1}$	$6.0X10^{-1}$	$1.6X10^{1}$	$2.5X10^{4}$	$6.6X10^{5}$
Ce-144 (a)		$2.0X10^{-1}$	5.4	$2.0X10^{-1}$	5.4	$1.2X10^{2}$	$3.2X10^{3}$
Cf-248	Californium (98)	$4.0X10^{1}$	$1.1X10^{3}$	$6.0X10^{-3}$	$1.6X10^{-1}$	$5.8X10^{1}$	$1.6X10^{3}$
Cf-249		3.0	$8.1X10^{1}$	$8.0X10^{-4}$	$2.2X10^{-2}$	$1.5X10^{-1}$	4.1
Cf-250		$2.0X10^{1}$	$5.4X10^{2}$	$2.0X10^{-3}$	$5.4X10^{-2}$	4.0	$1.1X10^{2}$
Cf-251		7.0	$1.9X10^{2}$	$7.0X10^{-4}$	$1.9X10^{-2}$	$5.9X10^{-2}$	1.6
Cf-252 (h)		$5.0X10^{-2}$	1.4	$3.0X10^{-3}$	$8.1X10^{-2}$	$2.0X10^{1}$	$5.4X10^{2}$
Cf-253 (a)		$4.0X10^{1}$	$1.1X10^{3}$	$4.0X10^{-2}$	1.1	$1.1X10^{3}$	$2.9X10^{4}$

Symbol of radionuclide	Element and atomic number	A1 (TBq)	A1 (Ci)[b]	A2 (TBq)	A2 (Ci)[b]	Specific activity	
						(TBq/g)	(Ci/g)
Cf-254		$1.0X10^{-3}$	$2.7X10^{-2}$	$1.0X10^{-3}$	$2.7X10^{-2}$	$3.1X10^{2}$	$8.5X10^{3}$
Cl-36	Chlorine (17)	$1.0X10^{1}$	$2.7X10^{2}$	$6.0X10^{-1}$	$1.6X10^{1}$	$1.2X10^{-3}$	$3.3X10^{-2}$
Cl-38		$2.0X10^{-1}$	5.4	$2.0X10^{-1}$	5.4	$4.9X10^{6}$	$1.3X10^{8}$
Cm-240	Curium (96)	$4.0X10^{1}$	$1.1X10^{3}$	$2.0X10^{-2}$	$5.4X10^{-1}$	$7.5X10^{2}$	$2.0X10^{4}$
Cm-241		2.0	$5.4X10^{1}$	1.0	$2.7X10^{1}$	$6.1X10^{2}$	$1.7X10^{4}$
Cm-242		$4.0X10^{1}$	$1.1X10^{3}$	$1.0X10^{-2}$	$2.7X10^{-1}$	$1.2X10^{2}$	$3.3X10^{3}$
Cm-243		9.0	$2.4X10^{2}$	$1.0X10^{-3}$	$2.7X10^{-2}$	$1.9X10^{-3}$	$5.2X10^{1}$
Cm-244		$2.0X10^{1}$	$5.4X10^{2}$	$2.0X10^{-3}$	$5.4X10^{-2}$	3.0	$8.1X10^{1}$
Cm-245		9.0	$2.4X10^{2}$	$9.0X10^{-4}$	$2.4X10^{-2}$	$6.4X10^{-3}$	$1.7X10^{-1}$
Cm-246		9.0	$2.4X10^{2}$	$9.0X10^{-4}$	$2.4X10^{-2}$	$1.1X10^{-2}$	$3.1X10^{-1}$
Cm-247 (a)		3.0	$8.1X10^{1}$	$1.0X10^{-3}$	$2.7X10^{-2}$	$3.4X10^{-6}$	$9.3X10^{-5}$
Cm-248		$2.0X10^{-2}$	$5.4X10^{-1}$	$3.0X10^{-4}$	$8.1X10^{-3}$	$1.6X10^{-4}$	$4.2X10^{-3}$
Co-55	Cobalt (27)	$5.0X10^{-1}$	$1.4X10^{1}$	$5.0X10^{-1}$	$1.4X10^{1}$	$1.1X10^{5}$	$3.1X10^{6}$
Co-56		$3.0X10^{-1}$	8.1	$3.0X10^{-1}$	8.1	$1.1X10^{3}$	$3.0X10^{4}$
Co-57		$1.0X10^{1}$	$2.7X10^{2}$	$1.0X10^{1}$	$2.7X10^{2}$	$3.1X10^{2}$	$8.4X10^{3}$
Co-58		1.0	$2.7X10^{1}$	1.0	$2.7X10^{1}$	$1.2X10^{3}$	$3.2X10^{4}$
Co-58m		$4.0X10^{1}$	$1.1X10^{3}$	$4.0X10^{1}$	$1.1X10^{3}$	$2.2X10^{5}$	$5.9X10^{6}$
Co-60		$4.0X10^{-1}$	$1.1X10^{1}$	$4.0X10^{-1}$	$1.1X10^{1}$	$4.2X10^{1}$	$1.1X10^{3}$
Cr-51	Chromium (24)	$3.0X10^{1}$	$8.1X10^{2}$	$3.0X10^{1}$	$8.1X10^{2}$	$3.4X10^{3}$	$9.2X10^{4}$
Cs-129	Cesium (55)	4.0	$1.1X10^{2}$	4.0	$1.1X10^{2}$	$2.8X10^{4}$	$7.6X10^{5}$
Cs-131		$3.0X10^{1}$	$8.1X10^{2}$	$3.0X10^{1}$	$8.1X10^{2}$	$3.8X10^{3}$	$1.0X10^{5}$
Cs-132		1.0	$2.7X10^{1}$	1.0	$2.7X10^{1}$	$5.7X10^{3}$	$1.5X10^{5}$
Cs-134		$7.0X10^{-1}$	$1.9X10^{1}$	$7.0X10^{-1}$	$1.9X10^{1}$	$4.8X10^{1}$	$1.3X10^{3}$
Cs-134m		$4.0X10^{1}$	$1.1X10^{3}$	$6.0X10^{-1}$	$1.6X10^{1}$	$3.0X10^{5}$	$8.0X10^{6}$
Cs-135		$4.0X10^{1}$	$1.1X10^{3}$	1.0	$2.7X10^{1}$	$4.3X10^{-5}$	$1.2X10^{-3}$
Cs-136		$5.0X10^{-1}$	$1.4X10^{1}$	$5.0X10^{-1}$	$1.4X10^{1}$	$2.7X10^{3}$	$7.3X10^{4}$
Cs-137 (a)		2.0	$5.4X10^{1}$	$6.0X10^{-1}$	$1.6X10^{1}$	3.2	$8.7X10^{1}$
Cu-64	Copper (29)	6.0	$1.6X10^{2}$	1.0	$2.7X10^{1}$	$1.4X10^{5}$	$3.9X10^{6}$
Cu-67		$1.0X10^{1}$	$2.7X10^{2}$	$7.0X10^{-1}$	$1.9X10^{1}$	$2.8X10^{4}$	$7.6X10^{5}$
Dy-159	Dysprosium (66)	$2.0X10^{1}$	$5.4X10^{2}$	$2.0X10^{1}$	$5.4X10^{2}$	$2.1X10^{2}$	$5.7X10^{3}$
Dy-165		$9.0X10^{-1}$	$2.4X10^{1}$	$6.0X10^{-1}$	$1.6X10^{1}$	$3.0X10^{5}$	$8.2X10^{6}$
Dy-166 (a)		$9.0X10^{-1}$	$2.4X10^{1}$	$3.0X10^{-1}$	8.1	$8.6X10^{3}$	$2.3X10^{5}$
Er-169	Erbium (68)	$4.0X10^{1}$	$1.1X10^{3}$	1.0	$2.7X10^{1}$	$3.1X10^{3}$	$8.3X10^{4}$
Er-171		$8.0X10^{-1}$	$2.2X10^{1}$	$5.0X10^{-1}$	$1.4X10^{1}$	$9.0X10^{4}$	$2.4X10^{6}$
Eu-147	Europium (63)	2.0	$5.4X10^{1}$	2.0	$5.4X10^{1}$	$1.4X10^{3}$	$3.7X10^{4}$
Eu-148		$5.0X10^{-1}$	$1.4X10^{1}$	$5.0X10^{-1}$	$1.4X10^{1}$	$6.0X10^{2}$	$1.6X10^{4}$
Eu-149		$2.0X10^{1}$	$5.4X10^{2}$	$2.0X10^{1}$	$5.4X10^{2}$	$3.5X10^{2}$	$9.4X10^{3}$
Eu-150 (short lived)		2.0	$5.4X10^{1}$	$7.0X10^{-1}$	$1.9X10^{1}$	$6.1X10^{4}$	$1.6X10^{6}$
Eu-150 (long lived)		$7.0X10^{-1}$	$1.9X10^{1}$	$7.0X10^{-1}$	$1.9X10^{1}$	$6.1X10^{4}$	$1.6X10^{6}$
Eu-152		1.0	$2.7X10^{1}$	1.0	$2.7X10^{1}$	6.5	$1.8X10^{2}$
Eu-152m		$8.0X10^{-1}$	$2.2X10^{1}$	$8.0X10^{-1}$	$2.2X10^{1}$	$8.2X10^{4}$	$2.2X10^{6}$
Eu-154		$9.0X10^{-1}$	$2.4X10^{1}$	$6.0X10^{-1}$	$1.6X10^{1}$	9.8	$2.6X10^{2}$
Eu-155		$2.0X10^{1}$	$5.4X10^{2}$	3.0	$8.1X10^{1}$	$1.8X10^{1}$	$4.9X10^{2}$
Eu-156		$7.0X10^{-1}$	$1.9X10^{1}$	$7.0X10^{-1}$	$1.9X10^{1}$	$2.0X10^{3}$	$5.5X10^{4}$
F-18	Fluorine (9)	1.0	$2.7X10^{1}$	$6.0X10^{-1}$	$1.6X10^{1}$	$3.5X10^{6}$	$9.5X10^{7}$
Fe-52 (a)	Iron (26)	$3.0X10^{-1}$	8.1	$3.0X10^{-1}$	8.1	$2.7X10^{5}$	$7.3X10^{6}$
Fe-55		$4.0X10^{1}$	$1.1X10^{3}$	$4.0X10^{1}$	$1.1X10^{3}$	$8.8X10^{1}$	$2.4X10^{3}$
Fe-59		$9.0X10^{-1}$	$2.4X10^{1}$	$9.0X10^{-1}$	$2.4X10^{1}$	$1.8X10^{3}$	$5.0X10^{4}$
Fe-60 (a)		$4.0X10^{1}$	$1.1X10^{3}$	$2.0X10^{-1}$	5.4	$7.4X10^{-4}$	$2.0X10^{-2}$
Ga-67	Gallium (31)	7.0	$1.9X10^{2}$	3.0	$8.1X10^{1}$	$2.2X10^{4}$	$6.0X10^{5}$
Ga-68		$5.0X10^{-1}$	$1.4X10^{1}$	$5.0X10^{-1}$	$1.4X10^{1}$	$1.5X10^{6}$	$4.1X10^{7}$
Ga-72		$4.0X10^{-1}$	$1.1X10^{1}$	$4.0X10^{-1}$	$1.1X10^{1}$	$1.1X10^{5}$	$3.1X10^{6}$
Gd-146 (a)	Gadolinium (64)	$5.0X10^{-1}$	$1.4X10^{1}$	$5.0X10^{-1}$	$1.4X10^{1}$	$6.9X10^{2}$	$1.9X10^{4}$
Gd-148		$2.0X10^{1}$	$5.4X10^{2}$	$2.0X10^{-3}$	$5.4X10^{-2}$	1.2	$3.2X10^{1}$
Gd-153		$1.0X10^{1}$	$2.7X10^{2}$	9.0	$2.4X10^{2}$	$1.3X10^{2}$	$3.5X10^{3}$
Gd-159		3.0	$8.1X10^{1}$	$6.0X10^{-1}$	$1.6X10^{1}$	$3.9X10^{4}$	$1.1X10^{6}$
Ge-68 (a)	Germanium (32)	$5.0X10^{-1}$	$1.4X10^{1}$	$5.0X10^{-1}$	$1.4X10^{1}$	$2.6X10^{2}$	$7.1X10^{3}$
Ge-71		$4.0X10^{1}$	$1.1X10^{3}$	$4.0X10^{1}$	$1.1X10^{3}$	$5.8X10^{3}$	$1.6X10^{5}$
Ge-77		$3.0X10^{-1}$	8.1	$3.0X10^{-1}$	8.1	$1.3X10^{5}$	$3.6X10^{6}$
Hf-172 (a)	Hafnium (72)	$6.0X10^{-1}$	$1.6X10^{1}$	$6.0X10^{-1}$	$1.6X10^{1}$	$4.1X10^{1}$	$1.1X10^{3}$
Hf-175		3.0	$8.1X10^{1}$	3.0	$8.1X10^{1}$	$3.9X10^{2}$	$1.1X10^{4}$
Hf-181		2.0	$5.4X10^{1}$	$5.0X10^{-1}$	$1.4X10^{1}$	$6.3X10^{2}$	$1.7X10^{4}$
Hf-182		Unlimited	Unlimited	Unlimited	Unlimited	$8.1X10^{-6}$	$2.2X10^{-4}$
Hg-194 (a)	Mercury (80)	1.0	$2.7X10^{1}$	1.0	$2.7X10^{1}$	$1.3X10^{-1}$	3.5
Hg-195m (a)		3.0	$8.1X10^{1}$	$7.0X10^{-1}$	$1.9X10^{1}$	$1.5X10^{4}$	$4.0X10^{5}$
Hg-197		$2.0X10^{1}$	$5.4X10^{2}$	$1.0X10^{1}$	$2.7X10^{2}$	$9.2X10^{3}$	$2.5X10^{5}$
Hg-197m		$1.0X10^{1}$	$2.7X10^{2}$	$4.0X10^{-1}$	$1.1X10^{1}$	$2.5X10^{4}$	$6.7X10^{5}$

Symbol of radionuclide	Element and atomic number	A1 (TBq)	A1 (Ci)[b]	A2 (TBq)	A2 (Ci)[b]	Specific activity	
						(TBq/g)	(Ci/g)
Hg-203		5.0	$1.4X10^{2}$	1.0	$2.7X10^{1}$	$5.1X10^{2}$	$1.4X10^{4}$
Ho-166	Holmium (67)	$4.0X10^{-1}$	$1.1X10^{1}$	$4.0X10^{-1}$	$1.1X10^{1}$	$2.6X10^{4}$	$7.0X10^{5}$
Ho-166m		$6.0X10^{-1}$	$1.6X10^{1}$	$5.0X10^{-1}$	$1.4X10^{1}$	$6.6X10^{-2}$	1.8
I-123	Iodine (53)	6.0	$1.6X10^{2}$	3.0	$8.1X10^{1}$	$7.1X10^{4}$	$1.9X10^{6}$
I-124		1.0	$2.7X10^{1}$	1.0	$2.7X10^{1}$	$9.3X10^{3}$	$2.5X10^{5}$
I-125		$2.0X10^{1}$	$5.4X10^{2}$	3.0	$8.1X10^{1}$	$6.4X10^{2}$	$1.7X10^{4}$
I-126		2.0	$5.4X10^{1}$	1.0	$2.7X10^{1}$	$2.9X10^{3}$	$8.0X10^{4}$
I-129		Unlimited	Unlimited	Unlimited	Unlimited	$6.5X10^{-6}$	$1.8X10^{-4}$
I-131		3.0	$8.1X10^{1}$	$7.0X10^{-1}$	$1.9X10^{1}$	$4.6X10^{3}$	$1.2X10^{5}$
I-132		$4.0X10^{-1}$	$1.1X10^{1}$	$4.0X10^{-1}$	$1.1X10^{1}$	$3.8X10^{5}$	$1.0X10^{7}$
I-133		$7.0X10^{-1}$	$1.9X10^{1}$	$6.0X10^{-1}$	$1.6X10^{1}$	$4.2X10^{4}$	$1.1X10^{6}$
I-134		$3.0X10^{-1}$	8.1	$3.0X10^{-1}$	8.1	$9.9X10^{5}$	$2.7X10^{7}$
I-135 (a)		$6.0X10^{-1}$	$1.6X10^{1}$	$6.0X10^{-1}$	$1.6X10^{1}$	$1.3X10^{5}$	$3.5X10^{6}$
In-111	Indium (49)	3.0	$8.1X10^{1}$	3.0	$8.1X10^{1}$	$1.5X10^{4}$	$4.2X10^{5}$
In-113m		4.0	$1.1X10^{2}$	2.0	$5.4X10^{1}$	$6.2X10^{5}$	$1.7X10^{7}$
In-114m (a)		$1.0X10^{1}$	$2.7X10^{2}$	$5.0X10^{-1}$	$1.4X10^{1}$	$8.6X10^{2}$	$2.3X10^{4}$
In-115m		7.0	$1.9X10^{2}$	1.0	$2.7X10^{1}$	$2.2X10^{5}$	$6.1X10^{6}$
Ir-189 (a)	Iridium (77)	$1.0X10^{1}$	$2.7X10^{2}$	$1.0X10^{1}$	$2.7X10^{2}$	$1.9X10^{3}$	$5.2X10^{4}$
Ir-190		$7.0X10^{-1}$	$1.9X10^{1}$	$7.0X10^{-1}$	$1.9X10^{1}$	$2.3X10^{3}$	$6.2X10^{4}$
Ir-192 (c)		1.0	$2.7X10^{1}$	$6.0X10^{-1}$	$1.6X10^{1}$	$3.4X10^{2}$	$9.2X10^{3}$
Ir-194		$3.0X10^{-1}$	8.1	$3.0X10^{-1}$	8.1	$3.1X10^{4}$	$8.4X10^{5}$
K-40	Potassium (19)	$9.0X10^{-1}$	$2.4X10^{1}$	$9.0X10^{-1}$	$2.4X10^{1}$	$2.4X10^{-7}$	$6.4X10^{-6}$
K-42		$2.0X10^{-1}$	5.4	$2.0X10^{-1}$	5.4	$2.2X10^{5}$	$6.0X10^{6}$
K-43		$7.0X10^{-1}$	$1.9X10^{1}$	$6.0X10^{-1}$	$1.6X10^{1}$	$1.2X10^{5}$	$3.3X10^{6}$
Kr-81	Krypton (36)	$4.0X10^{1}$	$1.1X10^{3}$	$4.0X10^{1}$	$1.1X10^{3}$	$7.8X10^{-4}$	$2.1X10^{-2}$
Kr-85		$1.0X10^{1}$	$2.7X10^{2}$	$1.0X10^{1}$	$2.7X10^{2}$	$1.5X10^{1}$	$3.9X10^{2}$
Kr-85m		8.0	$2.2X10^{2}$	3.0	$8.1X10^{1}$	$3.0X10^{5}$	$8.2X10^{6}$
Kr-87		$2.0X10^{-1}$	5.4	$2.0X10^{-1}$	5.4	$1.0X10^{6}$	$2.8X10^{7}$
La-137	Lanthanum (57)	$3.0X10^{1}$	$8.1X10^{2}$	6.0	$1.6X10^{2}$	$1.6X10^{-3}$	$4.4X10^{-2}$
La-140		$4.0X10^{-1}$	$1.1X10^{1}$	$4.0X10^{-1}$	$1.1X10^{1}$	$2.1X10^{4}$	$5.6X10^{5}$
Lu-172	Lutetium (71)	$6.0X10^{-1}$	$1.6X10^{1}$	$6.0X10^{-1}$	$1.6X10^{1}$	$4.2X10^{3}$	$1.1X10^{5}$
Lu-173		8.0	$2.2X10^{2}$	8.0	$2.2X10^{2}$	$5.6X10^{1}$	$1.5X10^{3}$
Lu-174		9.0	$2.4X10^{2}$	9.0	$2.4X10^{2}$	$2.3X10^{1}$	$6.2X10^{2}$
Lu-174m		$2.0X10^{1}$	$5.4X10^{2}$	$1.0X10^{1}$	$2.7X10^{2}$	$2.0X10^{2}$	$5.3X10^{3}$
Lu-177		$3.0X10^{1}$	$8.1X10^{2}$	$7.0X10^{-1}$	$1.9X10^{1}$	$4.1X10^{3}$	$1.1X10^{5}$
Mg-28 (a)	Magnesium (12)	$3.0X10^{-1}$	8.1	$3.0X10^{-1}$	8.1	$2.0X10^{5}$	$5.4X10^{6}$
Mn-52	Manganese (25)	$3.0X10^{-1}$	8.1	$3.0X10^{-1}$	8.1	$1.6X10^{4}$	$4.4X10^{5}$
Mn-53		Unlimited	Unlimited	Unlimited	Unlimited	$6.8X10^{-5}$	$1.8X10^{-3}$
Mn-54		1.0	$2.7X10^{1}$	1.0	$2.7X10^{1}$	$2.9X10^{2}$	$7.7X10^{3}$
Mn-56		$3.0X10^{-1}$	8.1	$3.0X10^{-1}$	8.1	$8.0X10^{5}$	$2.2X10^{7}$
Mo-93	Molybdenum (42)	$4.0X10^{1}$	$1.1X10^{3}$	$2.0X10^{1}$	$5.4X10^{2}$	$4.1X10^{-2}$	1.1
Mo-99 (a) (i)		1.0	$2.7X10^{1}$	$6.0X10^{-1}$	$1.6X10^{1}$	$1.8X10^{4}$	$4.8X10^{5}$
N-13	Nitrogen (7)	$9.0X10^{-1}$	$2.4X10^{1}$	$6.0X10^{-1}$	$1.6X10^{1}$	$5.4X10^{7}$	$1.5X10^{9}$
Na-22	Sodium (11)	$5.0X10^{-1}$	$1.4X10^{1}$	$5.0X10^{-1}$	$1.4X10^{1}$	$2.3X10^{2}$	$6.3X10^{3}$
Na-24		$2.0X10^{-1}$	5.4	$2.0X10^{-1}$	5.4	$3.2X10^{5}$	$8.7X10^{6}$
Nb-93m	Niobium (41)	$4.0X10^{1}$	$1.1X10^{3}$	$3.0X10^{1}$	$8.1X10^{2}$	8.8	$2.4X10^{2}$
Nb-94		$7.0X10^{-1}$	$1.9X10^{1}$	$7.0X10^{-1}$	$1.9X10^{1}$	$6.9X10^{-3}$	$1.9X10^{-1}$
Nb-95		1.0	$2.7X10^{1}$	1.0	$2.7X10^{1}$	$1.5X10^{3}$	$3.9X10^{4}$
Nb-97		$9.0X10^{-1}$	$2.4X10^{1}$	$6.0X10^{-1}$	$1.6X10^{1}$	$9.9X10^{5}$	$2.7X10^{7}$
Nd-147	Neodymium (60)	6.0	$1.6X10^{2}$	$6.0X10^{-1}$	$1.6X10^{1}$	$3.0X10^{3}$	$8.1X10^{4}$
Nd-149		$6.0X10^{-1}$	$1.6X10^{1}$	$5.0X10^{-1}$	$1.4X10^{1}$	$4.5X10^{5}$	$1.2X10^{7}$
Ni-59	Nickel (28)	Unlimited	Unlimited	Unlimited	Unlimited	$3.0X10^{-3}$	$8.0X10^{-2}$
Ni-63		$4.0X10^{1}$	$1.1X10^{3}$	$3.0X10^{1}$	$8.1X10^{2}$	2.1	$5.7X10^{1}$
Ni-65		$4.0X10^{-1}$	$1.1X10^{1}$	$4.0X10^{-1}$	$1.1X10^{1}$	$7.1X10^{5}$	$1.9X10^{7}$
Np-235	Neptunium (93)	$4.0X10^{1}$	$1.1X10^{3}$	$4.0X10^{1}$	$1.1X10^{3}$	$5.2X10^{1}$	$1.4X10^{3}$
Np-236 (short-lived)		$2.0X10^{1}$	$5.4X10^{2}$	2.0	$5.4X10^{1}$	$4.7X10^{-4}$	$1.3X10^{-2}$
Np-236 (long-lived)		$9.0X10^{0}$	$2.4X10^{2}$	$2.0X10^{-2}$	$5.4X10^{-1}$	$4.7X10^{-4}$	$1.3X10^{-2}$
Np-237		$2.0X10^{1}$	$5.4X10^{2}$	$2.0X10^{-3}$	$5.4X10^{-2}$	$2.6X10^{-5}$	$7.1X10^{-4}$
Np-239		7.0	$1.9X10^{2}$	$4.0X10^{-1}$	$1.1X10^{1}$	$8.6X10^{3}$	$2.3X10^{5}$
Os-185	Osmium (76)	1.0	$2.7X10^{1}$	1.0	$2.7X10^{1}$	$2.8X10^{2}$	$7.5X10^{3}$
Os-191		$1.0X10^{1}$	$2.7X10^{2}$	2.0	$5.4X10^{1}$	$1.6X10^{3}$	$4.4X10^{4}$
Os-191m		$4.0X10^{1}$	$1.1X10^{3}$	$3.0X10^{1}$	$8.1X10^{2}$	$4.6X10^{4}$	$1.3X10^{6}$
Os-193		2.0	$5.4X10^{1}$	$6.0X10^{-1}$	$1.6X10^{1}$	b$2.0X10^{4}$	$5.3X10^{5}$
Os-194 (a)		$3.0X10^{-1}$	8.1	$3.0X10^{-1}$	8.1	$1.1X10^{1}$	$3.1X10^{2}$
P-32	Phosphorus (15)	$5.0X10^{-1}$	$1.4X10^{1}$	$5.0X10^{-1}$	$1.4X10^{1}$	$1.1X10^{4}$	$2.9X10^{5}$
P-33		$4.0X10^{1}$	$1.1X10^{3}$	1.0	$2.7X10^{1}$	$5.8X10^{3}$	$1.6X10^{5}$
Pa-230 (a)	Protactinium (91)	2.0	$5.4X10^{1}$	$7.0X10^{-2}$	1.9	$1.2X10^{3}$	$3.3X10^{4}$

Symbol of radionuclide	Element and atomic number	A1 (TBq)	A1 (Ci)[b]	A2 (TBq)	A2 (Ci)[b]	Specific activity	
						(TBq/g)	(Ci/g)
Pa-231		4.0	$1.1X10^{2}$	$4.0X10^{-4}$	$1.1X10^{-2}$	$1.7X10^{-3}$	$4.7X10^{-2}$
Pa-233		5.0	$1.4X10^{2}$	$7.0X10^{-1}$	$1.9X10^{1}$	$7.7X10^{2}$	$2.1X10^{4}$
Pb-201	Lead (82)	1.0	$2.7X10^{1}$	1.0	$2.7X10^{1}$	$6.2X10^{4}$	$1.7X10^{6}$
Pb-202		$4.0X10^{1}$	$1.1X10^{3}$	$2.0X10^{1}$	$5.4X10^{2}$	$1.2X10^{-4}$	$3.4X10^{-3}$
Pb-203		4.0	$1.1X10^{2}$	3.0	$8.1X10^{1}$	$1.1X10^{4}$	$3.0X10^{5}$
Pb-205		Unlimited	Unlimited	Unlimited	Unlimited	$4.5X10^{-6}$	$1.2X10^{-4}$
Pb-210 (a)		1.0	$2.7X10^{1}$	$5.0X10^{-2}$	1.4	2.8	$7.6X10^{1}$
Pb-212 (a)		$7.0X10^{-1}$	$1.9X10^{1}$	$2.0X10^{-1}$	5.4	$5.1X10^{4}$	$1.4X10^{6}$
Pd-103 (a)	Palladium (46)	$4.0X10^{1}$	$1.1X10^{3}$	$4.0X10^{1}$	$1.1X10^{3}$	$2.8X10^{3}$	$7.5X10^{4}$
Pd-107		Unlimited	Unlimited	Unlimited	Unlimited	$1.9X10^{-5}$	$5.1X10^{-4}$
Pd-109		2.0	$5.4X10^{1}$	$5.0X10^{-1}$	$1.4X10^{1}$	$7.9X10^{4}$	$2.1X10^{6}$
Pm-143	Promethium (61)	3.0	$8.1X10^{1}$	3.0	$8.1X10^{1}$	$1.3X10^{2}$	$3.4X10^{3}$
Pm-144		$7.0X10^{-1}$	$1.9X10^{1}$	$7.0X10^{-1}$	$1.9X10^{1}$	$9.2X10^{1}$	$2.5X10^{3}$
Pm-145		$3.0X10^{1}$	$8.1X10^{2}$	$1.0X10^{1}$	$2.7X10^{2}$	5.2	$1.4X10^{2}$
Pm-147		$4.0X10^{1}$	$1.1X10^{3}$	2.0	$5.4X10^{1}$	$3.4X10^{1}$	$9.3X10^{2}$
Pm-148m (a)		$8.0X10^{-1}$	$2.2X10^{1}$	$7.0X10^{-1}$	$1.9X10^{1}$	$7.9X10^{2}$	$2.1X10^{4}$
Pm-149		2.0	$5.4X10^{1}$	$6.0X10^{-1}$	$1.6X10^{1}$	$1.5X10^{4}$	$4.0X10^{5}$
Pm-151		2.0	$5.4X10^{1}$	$6.0X10^{-1}$	$1.6X10^{1}$	$2.7X10^{4}$	$7.3X10^{5}$
Po-210	Polonium (84)	$4.0X10^{1}$	$1.1X10^{3}$	$2.0X10^{-2}$	$5.4X10^{-1}$	$1.7X10^{2}$	$4.5X10^{3}$
Pr-142	Praseodymium (59)	$4.0X10^{-1}$	$1.1X10^{1}$	$4.0X10^{-1}$	$1.1X10^{1}$	$4.3X10^{4}$	$1.2X10^{6}$
Pr-143		3.0	$8.1X10^{1}$	$6.0X10^{-1}$	$1.6X10^{1}$	$2.5X10^{3}$	$6.7X10^{4}$
Pt-188 (a)	Platinum (78)	1.0	$2.7X10^{1}$	$8.0X10^{-1}$	$2.2X10^{1}$	$2.5X10^{3}$	$6.8X10^{4}$
Pt-191		4.0	$1.1X10^{2}$	3.0	$8.1X10^{1}$	$8.7X10^{3}$	$2.4X10^{5}$
Pt-193		$4.0X10^{1}$	$1.1X10^{3}$	$4.0X10^{1}$	$1.1X10^{3}$	1.4	$3.7X10^{1}$
Pt-193m		$4.0X10^{1}$	$1.1X10^{3}$	$5.0X10^{-1}$	$1.4X10^{1}$	$5.8X10^{3}$	$1.6X10^{5}$
Pt-195m		$1.0X10^{1}$	$2.7X10^{2}$	$5.0X10^{-1}$	$1.4X10^{1}$	$6.2X10^{3}$	$1.7X10^{5}$
Pt-197		$2.0X10^{1}$	$5.4X10^{2}$	$6.0X10^{-1}$	$1.6X10^{1}$	$3.2X10^{4}$	$8.7X10^{5}$
Pt-197m		$1.0X10^{1}$	$2.7X10^{2}$	$6.0X10^{-1}$	$1.6X10^{1}$	$3.7X10^{5}$	$1.0X10^{7}$
Pu-236	Plutonium (94)	$3.0X10^{1}$	$8.1X10^{2}$	$3.0X10^{-3}$	$8.1X10^{-2}$	$2.0X10^{1}$	$5.3X10^{2}$
Pu-237		$2.0X10^{1}$	$5.4X10^{2}$	$2.0X10^{1}$	$5.4X10^{2}$	$4.5X10^{2}$	$1.2X10^{4}$
Pu-238		$1.0X10^{1}$	$2.7X10^{2}$	$1.0X10^{-3}$	$2.7X10^{-2}$	$6.3X10^{-1}$	$1.7X10^{1}$
Pu-239		$1.0X10^{1}$	$2.7X10^{2}$	$1.0X10^{-3}$	$2.7X10^{-2}$	$2.3X10^{-3}$	$6.2X10^{-2}$
Pu-240		$1.0X10^{1}$	$2.7X10^{2}$	$1.0X10^{-3}$	$2.7X10^{-2}$	$8.4X10^{-3}$	$2.3X10^{-1}$
Pu-241 (a)		$4.0X10^{1}$	$1.1X10^{3}$	$6.0X10^{-2}$	1.6	3.8	$1.0X10^{2}$
Pu-242		$1.0X10^{1}$	$2.7X10^{2}$	$1.0X10^{-3}$	$2.7X10^{-2}$	$1.5X10^{-4}$	$3.9X10^{-3}$
Pu-244 (a)		$4.0X10^{-1}$	$1.1X10^{1}$	$1.0X10^{-3}$	$2.7X10^{-2}$	$6.7X10^{-7}$	$1.8X10^{-5}$
Ra-223 (a)	Radium (88)	$4.0X10^{-1}$	$1.1X10^{1}$	$7.0X10^{-3}$	$1.9X10^{-1}$	$1.9X10^{3}$	$5.1X10^{4}$
Ra-224 (a)		$4.0X10^{-1}$	$1.1X10^{1}$	$2.0X10^{-2}$	$5.4X10^{-1}$	$5.9X10^{3}$	$1.6X10^{5}$
Ra-225 (a)		$2.0X10^{-1}$	5.4	$4.0X10^{-3}$	$1.1X10^{-1}$	$1.5X10^{3}$	$3.9X10^{4}$
Ra-226 (a)		$2.0X10^{-1}$	5.4	$3.0X10^{-3}$	$8.1X10^{-2}$	$3.7X10^{-2}$	1.0
Ra-228 (a)		$6.0X10^{-1}$	$1.6X10^{1}$	$2.0X10^{-2}$	$5.4X10^{-1}$	$1.0X10^{1}$	$2.7X10^{2}$
Rb-81	Rubidium (37)	2.0	$5.4X10^{1}$	$8.0X10^{-1}$	$2.2X10^{1}$	$3.1X10^{5}$	$8.4X10^{6}$
Rb-83 (a)		2.0	$5.4X10^{1}$	2.0	$5.4X10^{1}$	$6.8X10^{2}$	$1.8X10^{4}$
Rb-84		1.0	$2.7X10^{1}$	1.0	$2.7X10^{1}$	$1.8X10^{3}$	$4.7X10^{4}$
Rb-86		$5.0X10^{-1}$	$1.4X10^{1}$	$5.0X10^{-1}$	$1.4X10^{1}$	$3.0X10^{3}$	$8.1X10^{4}$
Rb-87		Unlimited	Unlimited	Unlimited	Unlimited	$3.2X10^{-9}$	$8.6X10^{-8}$
Rb (nat)		Unlimited	Unlimited	Unlimited	Unlimited	$6.7X10^{6}$	$1.8X10^{8}$
Re-184	Rhenium (75)	1.0	$2.7X10^{1}$	1.0	$2.7X10^{1}$	$6.9X10^{2}$	$1.9X10^{4}$
Re-184m		3.0	$8.1X10^{1}$	1.0	$2.7X10^{1}$	$1.6X10^{2}$	$4.3X10^{3}$
Re-186		2.0	$5.4X10^{1}$	$6.0X10^{-1}$	$1.6X10^{1}$	$6.9X10^{3}$	$1.9X10^{5}$
Re-187		Unlimited	Unlimited	Unlimited	Unlimited	$1.4X10^{-9}$	$3.8X10^{-8}$
Re-188		$4.0X10^{-1}$	$1.1X10^{1}$	$4.0X10^{-1}$	$1.1X10^{1}$	$3.6X10^{4}$	$9.8X10^{5}$
Re-189 (a)		3.0	$8.1X10^{1}$	$6.0X10^{-1}$	$1.6X10^{1}$	$2.5X10^{4}$	$6.8X10^{5}$
Re (nat)		Unlimited	Unlimited	Unlimited	Unlimited	0.0	$2.4X10^{-8}$
Rh-99	Rhodium (45)	2.0	$5.4X10^{1}$	2.0	$5.4X10^{1}$	$3.0X10^{3}$	$8.2X10^{4}$
Rh-101		4.0	$1.1X10^{2}$	3.0	$8.1X10^{1}$	$4.1X10^{1}$	$1.1X10^{3}$
Rh-102		$5.0X10^{-1}$	$1.4X10^{1}$	$5.0X10^{-1}$	$1.4X10^{1}$	$4.5X10^{1}$	$1.2X10^{3}$
Rh-102m		2.0	$5.4X10^{1}$	2.0	$5.4X10^{1}$	$2.3X10^{2}$	$6.2X10^{3}$
Rh-103m		$4.0X10^{1}$	$1.1X10^{3}$	$4.0X10^{1}$	$1.1X10^{3}$	$1.2X10^{6}$	$3.3X10^{7}$
Rh-105		$1.0X10^{1}$	$2.7X10^{2}$	$8.0X10^{-1}$	$2.2X10^{1}$	$3.1X10^{4}$	$8.4X10^{5}$
Rn-222 (a)	Radon (86)	$3.0X10^{-1}$	8.1	$4.0X10^{-3}$	$1.1X10^{-1}$	$5.7X10^{3}$	$1.5X10^{5}$
Ru-97	Ruthenium (44)	5.0	$1.4X10^{2}$	5.0	$1.4X10^{2}$	$1.7X10^{4}$	$4.6X10^{5}$
Ru-103 (a)		2.0	$5.4X10^{1}$	2.0	$5.4X10^{1}$	$1.2X10^{3}$	$3.2X10^{4}$
Ru-105		1.0	$2.7X10^{1}$	$6.0X10^{-1}$	$1.6X10^{1}$	$2.5X10^{5}$	$6.7X10^{6}$
Ru-106 (a)		$2.0X10^{-1}$	5.4	$2.0X10^{-1}$	5.4	$1.2X10^{2}$	$3.3X10^{3}$
S-35	Sulphur (16)	$4.0X10^{1}$	$1.1X10^{3}$	3.0	$8.1X10^{1}$	$1.6X10^{3}$	$4.3X10^{4}$
Sb-122	Antimony (51)	$4.0X10^{-1}$	$1.1X10^{1}$	$4.0X10^{-1}$	$1.1X10^{1}$	$1.5X10^{4}$	$4.0X10^{5}$
Sb-124		$6.0X10^{-1}$	$1.6X10^{1}$	$6.0X10^{-1}$	$1.6X10^{1}$	$6.5X10^{2}$	$1.7X10^{4}$
Sb-125		2.0	$5.4X10^{1}$	1.0	$2.7X10^{1}$	$3.9X10^{1}$	$1.0X10^{3}$

Symbol of radionuclide	Element and atomic number	A1 (TBq)	A1 (Ci)[b]	A2 (TBq)	A2 (Ci)[b]	Specific activity	
						(TBq/g)	(Ci/g)
Sb-126		$4.0X10^{-1}$	$1.1X10^{1}$	$4.0X10^{-1}$	$1.1X10^{1}$	$3.1X10^{3}$	$8.4X10^{4}$
Sc-44	Scandium (21)	$5.0X10^{-1}$	$1.4X10^{1}$	$5.0X10^{-1}$	$1.4X10^{1}$	$6.7X10^{5}$	$1.8X10^{7}$
Sc-46		$5.0X10^{-1}$	$1.4X10^{1}$	$5.0X10^{-1}$	$1.4X10^{1}$	$1.3X10^{3}$	$3.4X10^{4}$
Sc-47		$1.0X10^{1}$	$2.7X10^{2}$	$7.0X10^{-1}$	$1.9X10^{1}$	$3.1X10^{4}$	$8.3X10^{5}$
Sc-48		$3.0X10^{-1}$	8.1	$3.0X10^{-1}$	8.1	$5.5X10^{4}$	$1.5X10^{6}$
Se-75	Selenium (34)	3.0	$8.1X10^{1}$	3.0	$8.1X10^{1}$	$5.4X10^{2}$	$1.5X10^{4}$
Se-79		$4.0X10^{1}$	$1.1X10^{3}$	2.0	$5.4X10^{1}$	$2.6X10^{-3}$	$7.0X10^{-2}$
Si-31	Silicon (14)	$6.0X10^{-1}$	$1.6X10^{1}$	$6.0X10^{-1}$	$1.6X10^{1}$	$1.4X10^{6}$	$3.9X10^{7}$
Si-32		$4.0X10^{1}$	$1.1X10^{3}$	$5.0X10^{-1}$	$1.4X10^{1}$	3.9	$1.1X10^{2}$
Sm-145	Samarium (62)	$1.0X10^{1}$	$2.7X10^{2}$	$1.0X10^{1}$	$2.7X10^{2}$	$9.8X10^{1}$	$2.6X10^{3}$
Sm-147		Unlimited	Unlimited	Unlimited	Unlimited	$8.5X10^{-1}$	$2.3X10^{-8}$
Sm-151		$4.0X10^{1}$	$1.1X10^{3}$	$1.0X10^{1}$	$2.7X10^{2}$	$9.7X10^{-1}$	$2.6X10^{1}$
Sm-153		9.0	$2.4X10^{2}$	$6.0X10^{-1}$	$1.6X10^{1}$	$1.6X10^{4}$	$4.4X10^{5}$
Sn-113 (a)	Tin (50)	4.0	$1.1X10^{2}$	2.0	$5.4X10^{1}$	$3.7X10^{2}$	$1.0X10^{4}$
Sn-117m		7.0	$1.9X10^{2}$	$4.0X10^{-1}$	$1.1X10^{1}$	$3.0X10^{3}$	$8.2X10^{4}$
Sn-119m		$4.0X10^{1}$	$1.1X10^{3}$	$3.0X10^{1}$	$8.1X10^{2}$	$1.4X10^{2}$	$3.7X10^{3}$
Sn-121m (a)		$4.0X10^{1}$	$1.1X10^{3}$	$9.0X10^{-1}$	$2.4X10^{1}$	2.0	$5.4X10^{1}$
Sn-123		$8.0X10^{-1}$	$2.2X10^{1}$	$6.0X10^{-1}$	$1.6X10^{1}$	$3.0X10^{2}$	$8.2X10^{3}$
Sn-125		$4.0X10^{-1}$	$1.1X10^{1}$	$4.0X10^{-1}$	$1.1X10^{1}$	$4.0X10^{3}$	$1.1X10^{5}$
Sn-126 (a)		$6.0X10^{-1}$	$1.6X10^{1}$	$4.0X10^{-1}$	$1.1X10^{1}$	$1.0X10^{-3}$	$2.8X10^{-2}$
Sr-82 (a)	Strontium (38)	$2.0X10^{-1}$	5.4	$2.0X10^{-1}$	5.4	$2.3X10^{3}$	$6.2X10^{4}$
Sr-85		2.0	$5.4X10^{1}$	2.0	$5.4X10^{1}$	$8.8X10^{2}$	$2.4X10^{4}$
Sr-85m		5.0	$1.4X10^{2}$	5.0	$1.4X10^{2}$	$1.2X10^{6}$	$3.3X10^{7}$
Sr-87m		3.0	$8.1X10^{1}$	3.0	$8.1X10^{1}$	$4.8X10^{5}$	$1.3X10^{7}$
Sr-89		$6.0X10^{-1}$	$1.6X10^{1}$	$6.0X10^{-1}$	$1.6X10^{1}$	$1.1X10^{3}$	$2.9X10^{4}$
Sr-90 (a)		$3.0X10^{-1}$	8.1	$3.0X10^{-1}$	8.1	5.1	$1.4X10^{2}$
Sr-91 (a)		$3.0X10^{-1}$	8.1	$3.0X10^{-1}$	8.1	$1.3X10^{5}$	$3.6X10^{6}$
Sr-92 (a)		1.0	$2.7X10^{1}$	$3.0X10^{-1}$	8.1	$4.7X10^{5}$	$1.3X10^{7}$
T(H-3)	Tritium (1)	$4.0X10^{1}$	$1.1X10^{3}$	$4.0X10^{1}$	$1.1X10^{3}$	$3.6X10^{2}$	$9.7X10^{3}$
Ta-178 (long-lived)	Tantalum (73)	1.0	$2.7X10^{1}$	$8.0X10^{-1}$	$2.2X10^{1}$	$4.2X10^{6}$	$1.1X10^{8}$
Ta-179		$3.0X10^{1}$	$8.1X10^{2}$	$3.0X10^{1}$	$8.1X10^{2}$	$4.1X10^{1}$	$1.1X10^{3}$
Ta-182		$9.0X10^{-1}$	$2.4X10^{1}$	$5.0X10^{-1}$	$1.4X10^{1}$	$2.3X10^{2}$	$6.2X10^{3}$
Tb-157	Terbium (65)	$4.0X10^{1}$	$1.1X10^{3}$	$4.0X10^{1}$	$1.1X10^{3}$	$5.6X10^{-1}$	$1.5X10^{1}$
Tb-158		1.0	$2.7X10^{1}$	1.0	$2.7X10^{1}$	$5.6X10^{-1}$	$1.5X10^{1}$
Tb-160		1.0	$2.7X10^{1}$	$6.0X10^{-1}$	$1.6X10^{1}$	$4.2X10^{2}$	$1.1X10^{4}$
Tc-95m (a)	Technetium (43)	2.0	$5.4X10^{1}$	2.0	$5.4X10^{1}$	$8.3X10^{2}$	$2.2X10^{4}$
Tc-96		$4.0X10^{-1}$	$1.1X10^{1}$	$4.0X10^{-1}$	$1.1X10^{1}$	$1.2X10^{4}$	$3.2X10^{5}$
Tc-96m (a)		$4.0X10^{-1}$	$1.1X10^{1}$	$4.0X10^{-1}$	$1.1X10^{1}$	$1.4X10^{6}$	$3.8X10^{7}$
Tc-97		Unlimited	Unlimited	Unlimited	Unlimited	$5.2X10^{-5}$	$1.4X10^{-3}$
Tc-97m		$4.0X10^{1}$	$1.1X10^{3}$	1.0	$2.7X10^{1}$	$5.6X10^{2}$	$1.5X10^{4}$
Tc-98		$8.0X10^{-1}$	$2.2X10^{1}$	$7.0X10^{-1}$	$1.9X10^{1}$	$3.2X10^{-5}$	$8.7X10^{-4}$
Tc-99		$4.0X10^{1}$	$1.1X10^{3}$	$9.0X10^{-1}$	$2.4X10^{1}$	$6.3X10^{-4}$	$1.7X10^{-2}$
Tc-99m		$1.0X10^{1}$	$2.7X10^{2}$	4.0	$1.1X10^{2}$	$1.9X10^{5}$	$5.3X10^{6}$
Te-121	Tellurium (52)	2.0	$5.4X10^{1}$	2.0	$5.4X10^{1}$	$2.4X10^{3}$	$6.4X10^{4}$
Te-121m		5.0	$1.4X10^{2}$	3.0	$8.1X10^{1}$	$2.6X10^{2}$	$7.0X10^{3}$
Te-123m		8.0	$2.2X10^{2}$	1.0	$2.7X10^{1}$	$3.3X10^{2}$	$8.9X10^{3}$
Te-125m		$2.0X10^{1}$	$5.4X10^{2}$	$9.0X10^{-1}$	$2.4X10^{1}$	$6.7X10^{2}$	$1.8X10^{4}$
Te-127		$2.0X10^{1}$	$5.4X10^{2}$	$7.0X10^{-1}$	$1.9X10^{1}$	$9.8X10^{4}$	$2.6X10^{6}$
Te-127m (a)		$2.0X10^{1}$	$5.4X10^{2}$	$5.0X10^{-1}$	$1.4X10^{1}$	$3.5X10^{2}$	$9.4X10^{3}$
Te-129		$7.0X10^{-1}$	$1.9X10^{1}$	$6.0X10^{-1}$	$1.6X10^{1}$	$7.7X10^{5}$	$2.1X10^{7}$
Te-129m (a)		$8.0X10^{-1}$	$2.2X10^{1}$	$4.0X10^{-1}$	$1.1X10^{1}$	$1.1X10^{3}$	$3.0X10^{4}$
Te-131m (a)		$7.0X10^{-1}$	$1.9X10^{1}$	$5.0X10^{-1}$	$1.4X10^{1}$	$3.0X10^{4}$	$8.0X10^{5}$
Te-132 (a)		$5.0X10^{-1}$	$1.4X10^{1}$	$4.0X10^{-1}$	$1.1X10^{1}$	$3.1X10^{4}$	$3.0X10^{5}$
Th-227	Thorium (90)	$1.0X10^{1}$	$2.7X10^{2}$	$5.0X10^{-3}$	$1.4X10^{-1}$	$1.1X10^{3}$	$3.1X10^{4}$
Th-228 (a)		$5.0X10^{-1}$	$1.4X10^{1}$	$1.0X10^{-3}$	$2.7X10^{-2}$	$3.0X10^{1}$	$8.2X10^{2}$
Th-229		5.0	$1.4X10^{2}$	$5.0X10^{-4}$	$1.4X10^{-2}$	$7.9X10^{-3}$	$2.1X10^{-1}$
Th-230		$1.0X10^{1}$	$2.7X10^{2}$	$1.0X10^{-3}$	$2.7X10^{-2}$	$7.6X10^{-4}$	$2.1X10^{-2}$
Th-231		$4.0X10^{1}$	$1.1X10^{3}$	$2.0X10^{-2}$	$5.4X10^{-1}$	$2.0X10^{4}$	$5.3X10^{5}$
Th-232		Unlimited	Unlimited	Unlimited	Unlimited	$4.0X10^{-9}$	$1.1X10^{-7}$
Th-234 (a)		$3.0X10^{-1}$	8.1	$3.0X10^{-1}$	8.1	$8.6X10^{2}$	$2.3X10^{4}$
Th(nat)		Unlimited	Unlimited	Unlimited	Unlimited	$8.1X10^{-9}$	$2.2X10^{-7}$
Ti-44 (a)	Titanium (22)	$5.0X10^{-1}$	$1.4X10^{1}$	$4.0X10^{-1}$	$1.1X10^{1}$	6.4	$1.7X10^{2}$
Tl-200	Thallium (81)	$9.0X10^{-1}$	$2.4X10^{1}$	$9.0X10^{-1}$	$2.4X10^{1}$	$2.2X10^{4}$	$6.0X10^{5}$
Tl-201		$1.0X10^{1}$	$2.7X10^{2}$	4.0	$1.1X10^{2}$	$7.9X10^{3}$	$2.1X10^{5}$
Tl-202		2.0	$5.4X10^{1}$	2.0	$5.4X10^{1}$	$2.0X10^{3}$	$5.3X10^{4}$
Tl-204		$1.0X10^{1}$	$2.7X10^{2}$	$7.0X10^{-1}$	$1.9X10^{1}$	$1.7X10^{1}$	$4.6X10^{2}$
Tm-167	Thulium (69)	7.0	$1.9X10^{2}$	$8.0X10^{-1}$	$2.2X10^{1}$	$3.1X10^{3}$	$8.5X10^{4}$
Tm-170		3.0	$8.1X10^{1}$	$6.0X10^{-1}$	$1.6X10^{1}$	$2.2X10^{2}$	$6.0X10^{3}$

Symbol of radionuclide	Element and atomic number	A1 (TBq)	A1 (Ci)[b]	A2 (TBq)	A2 (Ci)[b]	Specific activity	
						(TBq/g)	(Ci/g)
Tm-171		$4.0X10^{1}$	$1.1X10^{3}$	$4.0X10^{1}$	$1.1X10^{3}$	$4.0X10^{1}$	$1.1X10^{3}$
U-230 (fast lung absorption) (a)(d)	Uranium (92)	$4.0X10^{1}$	$1.1X10^{3}$	$1.0X10^{-1}$	2.7	$1.0X10^{3}$	$2.7X10^{4}$
U-230 (medium lung absorption) (a)(e)		$4.0X10^{1}$	$1.1X10^{3}$	$4.0X10^{-3}$	$1.1X10^{-1}$	$1.0X10^{3}$	$2.7X10^{4}$
U-230 (slow lung absorption) (a)(f)		$3.0X10^{1}$	$8.1X10^{2}$	$3.0X10^{-3}$	$8.1X10^{-2}$	$1.0X10^{3}$	$2.7X10^{4}$
U-232 (fast lung absorption) (d)		$4.0X10^{1}$	$1.1X10^{3}$	$1.0X10^{-2}$	$2.7X10^{-1}$	$8.3X10^{-1}$	$2.2X10^{1}$
U-232 (medium lung absorption) (e)		$4.0X10^{1}$	$1.1X10^{3}$	$7.0X10^{-3}$	$1.9X10^{-1}$	$8.3X10^{-1}$	$2.2X10^{1}$
U-232 (slow lung absorption) (f)		$1.0X10^{1}$	$2.7X10^{2}$	$1.0X10^{-3}$	$2.7X10^{-2}$	$8.3X10^{-1}$	$2.2X10^{1}$
U-233 (fast lung absorption) (d)		$4.0X10^{1}$	$1.1X10^{3}$	$9.0X10^{-2}$	2.4	$3.6X10^{-4}$	$9.7X10^{-3}$
U-233 (medium lung absorption) (e)		$4.0X10^{1}$	$1.1X10^{3}$	$2.0X10^{-2}$	$5.4X10^{-1}$	$3.6X10^{-4}$	$9.7X10^{-3}$
U-233 (slow lung absorption) (f)		$4.0X10^{1}$	$1.1X10^{3}$	$6.0X10^{-3}$	$1.6X10^{-1}$	$3.6X10^{-4}$	$9.7X10^{-3}$
U-234 (fast lung absorption) (d)		$4.0X10^{1}$	$1.1X10^{3}$	$9.0X10^{-2}$	2.4	$2.3X10^{-4}$	$6.2X10^{-3}$
U-234 (medium lung absorption) (e)		$4.0X10^{1}$	$1.1X10^{3}$	$2.0X10^{-2}$	$5.4X10^{-1}$	$2.3X10^{-4}$	$6.2X10^{-3}$
U-234 (slow lung absorption) (f)		$4.0X10^{1}$	$1.1X10^{3}$	$6.0X10^{-3}$	$1.6X10^{-1}$	$2.3X10^{-4}$	$6.2X10^{-3}$
U-235 (all lung absorption types) (a), (d), (e), (f)		Unlimited	Unlimited	Unlimited	Unlimited	$8.0X10^{-8}$	$2.2X10^{-6}$
U-236 (fast lung absorption) (d)		Unlimited	Unlimited	Unlimited	Unlimited	$2.4X10^{-6}$	$6.5X10^{-5}$
U-236 (medium lung absorption) (e)		$4.0X10^{1}$	$1.1X10^{3}$	$2.0X10^{-2}$	$5.4X10^{-1}$	$2.4X10^{-6}$	$6.5X10^{-5}$
U-236 (slow lung absorption) (f)		$4.0X10^{1}$	$1.1X10^{3}$	$6.0X10^{-3}$	$1.6X10^{-1}$	$2.4X10^{-6}$	$6.5X10^{-5}$
U-238 (all lung absorption types) (d), (e), (f)		Unlimited	Unlimited	Unlimited	Unlimited	$1.2X10^{-8}$	$3.4X10^{-7}$
U (nat)		Unlimited	Unlimited	Unlimited	Unlimited	$2.6X10^{-8}$	$7.1X10^{-7}$
U (enriched to 20% or less) (g)		Unlimited	Unlimited	Unlimited	Unlimited	See Table A-4	See Table A-4
U (dep)		Unlimited	Unlimited	Unlimited	Unlimited	See Table A-4	See Table A-3
V-48	Vanadium (23)	$4.0X10^{-1}$	$1.1X10^{1}$	$4.0X10^{-1}$	$1.1X10^{1}$	$6.3X10^{3}$	$1.7X10^{5}$
V-49		$4.0X10^{1}$	$1.1X10^{3}$	$4.0X10^{1}$	$1.1X10^{3}$	$3.0X10^{2}$	$8.1X10^{3}$
W-178 (a)	Tungsten (74)	9.0	$2.4X10^{2}$	5.0	$1.4X10^{2}$	$1.3X10^{3}$	$3.4X10^{4}$
W-181		$3.0X10^{1}$	$8.1X10^{2}$	$3.0X10^{1}$	$8.1X10^{2}$	$2.2X10^{2}$	$6.0X10^{3}$
W-185		$4.0X10^{1}$	$1.1X10^{3}$	$8.0X10^{-1}$	$2.2X10^{1}$	$3.5X10^{2}$	$9.4X10^{3}$
W-187		2.0	$5.4X10^{1}$	$6.0X10^{-1}$	$1.6X10^{1}$	$2.6X10^{4}$	$7.0X10^{5}$
W-188 (a)		$4.0X10^{-1}$	$1.1X10^{1}$	$3.0X10^{-1}$	8.1	$3.7X10^{2}$	$1.0X10^{4}$
Xe-122 (a)	Xenon (54)	$4.0X10^{-1}$	$1.1X10^{1}$	$4.0X10^{-1}$	$1.1X10^{1}$	$4.8X10^{4}$	$1.3X10^{6}$
Xe-123		2.0	$5.4X10^{1}$	$7.0X10^{-1}$	$1.9X10^{1}$	$4.4X10^{5}$	$1.2X10^{7}$
Xe-127		4.0	$1.1X10^{2}$	2.0	$5.4X10^{1}$	$1.0X10^{3}$	$2.8X10^{4}$
Xe-131m		$4.0X10^{1}$	$1.1X10^{3}$	$4.0X10^{1}$	$1.1X10^{3}$	$3.1X10^{3}$	$8.4X10^{4}$
Xe-133		$2.0X10^{1}$	$5.4X10^{2}$	$1.0X10^{1}$	$2.7X10^{2}$	$6.9X10^{3}$	$1.9X10^{5}$
Xe-135		3.0	$8.1X10^{1}$	2.0	$5.4X10^{1}$	$9.5X10^{4}$	$2.6X10^{6}$
Y-87 (a)	Yttrium (39)	1.0	$2.7X10^{1}$	1.0	$2.7X10^{1}$	$1.7X10^{4}$	$4.5X10^{5}$
Y-88		$4.0X10^{-1}$	$1.1X10^{1}$	$4.0X10^{-1}$	$1.1X10^{1}$	$5.2X10^{2}$	$1.4X10^{4}$
Y-90		$3.0X10^{-1}$	8.1	$3.0X10^{-1}$	8.1	$2.0X10^{4}$	$5.4X10^{5}$
Y-91		$6.0X10^{-1}$	$1.6X10^{1}$	$6.0X10^{-1}$	$1.6X10^{1}$	$9.1X10^{2}$	$2.5X10^{4}$
Y-91m		2.0	$5.4X10^{1}$	2.0	$5.4X10^{1}$	$1.5X10^{6}$	$4.2X10^{7}$
Y-92		$2.0X10^{-1}$	5.4	$2.0X10^{-1}$	5.4	$3.6X10^{5}$	$9.6X10^{6}$
Y-93		$3.0X10^{-1}$	8.1	$3.0X10^{-1}$	8.1	$1.2X10^{5}$	$3.3X10^{6}$
Yb-169	Ytterbium (70)	4.0	$1.1X10^{2}$	1.0	$2.7X10^{1}$	$8.9X10^{2}$	$2.4X10^{4}$
Yb-175		$3.0X10^{1}$	$8.1X10^{2}$	$9.0X10^{-1}$	$2.4X10^{1}$	$6.6X10^{3}$	$1.8X10^{5}$
Zn-65	Zinc (30)	2.0	$5.4X10^{1}$	2.0	$5.4X10^{1}$	$3.0X10^{2}$	$8.2X10^{3}$
Zn-69		3.0	$8.1X10^{1}$	$6.0X10^{-1}$	$1.6X10^{1}$	$1.8X10^{6}$	$4.9X10^{7}$
Zn-69m (a)		3.0	$8.1X10^{1}$	$6.0X10^{-1}$	$1.6X10^{1}$	$1.2X10^{5}$	$3.3X10^{6}$
Zr-88	Zirconium (40)	3.0	$8.1X10^{1}$	3.0	$8.1X10^{1}$	$6.6X10^{2}$	$1.8X10^{4}$

Symbol of radionuclide	Element and atomic number	A1 (TBq)	A1 (Ci)[b]	A2 (TBq)	A2 (Ci)[b]	Specific activity	
						(TBq/g)	(Ci/g)
Zr-93		Unlimited	Unlimited	Unlimited	Unlimited	$9.3X10^{-5}$	$2.5X10^{-3}$
Zr-95 (a)		2.0	$5.4X10^{1}$	$8.0X10^{-1}$	$2.2X10^{1}$	$7.9X10^{2}$	$2.1X10^{4}$
Zr-97 (a)		$4.0X10^{-1}$	$1.1X10^{1}$	$4.0X10^{-1}$	$1.1X10^{1}$	$7.1X10^{4}$	$1.9X10^{6}$

Table A-2.—Exempt Material Activity Concentrations and Exempt Consignment Activity Limits for Radionuclides

Symbol of radionuclide	Element and atomic number	Activity concentration for exempt material (Bq/g)	Activity concentration for exempt material (Ci/g)	Activity limit for exempt consign-ment (Bq)	Activity limit for exempt consign-ment (Ci)
Ac-225	Actinium (89)	$1.0X10^{1}$	$2.7X10^{-10}$	$1.0X10^{4}$	$2.7X10^{-7}$
Ac-227	-	$1.0X10^{-1}$	$2.7X10^{-12}$	$1.0X10^{3}$	$2.7X10^{-8}$
Ac-228	-	$1.0X10^{1}$	$2.7X10^{-10}$	$1.0X10^{6}$	$2.7X10^{-5}$
Ag-105	Silver (47)	$1.0X10^{2}$	$2.7X10^{-9}$	$1.0X10^{6}$	$2.7X10^{-5}$
Ag-108m (b)	-	$1.0X10^{1}$	$2.7X10^{-10}$	$1.0X10^{6}$	$2.7X10^{-5}$
Ag-110m	-	$1.0X10^{1}$	$2.7X10^{-10}$	$1.0X10^{6}$	$2.7X10^{-5}$
Ag-111	-	$1.0X10^{3}$	$2.7X10^{-8}$	$1.0X10^{6}$	$2.7X10^{-5}$
Al-26	Aluminum (13)	$1.0X10^{1}$	$2.7X10^{-10}$	$1.0X10^{5}$	$2.7X10^{-6}$
Am-241	Americium (95)	1.0	$2.7X10^{-11}$	$1.0X10^{4}$	$2.7X10^{-7}$
Am-242m (b)	-	1.0	$2.7X10^{-11}$	$1.0X10^{4}$	$2.7X10^{-7}$
Am-243 (b)	-	1.0	$2.7X10^{-11}$	$1.0X10^{3}$	$2.7X10^{-8}$
Ar-37	Argon (18)	$1.0X10^{6}$	$2.7X10^{-5}$	$1.0X10^{8}$	$2.7X10^{-3}$
Ar-39	-	$1.0X10^{7}$	$2.7X10^{-4}$	$1.0X10^{4}$	$2.7X10^{-7}$
Ar-41	-	$1.0X10^{2}$	$2.7X10^{-9}$	$1.0X10^{9}$	$2.7X10^{-2}$
As-72	Arsenic (33)	$1.0X10^{1}$	$2.7X10^{-10}$	$1.0X10^{5}$	$2.7X10^{-6}$
As-73	-	$1.0X10^{3}$	$2.7X10^{-8}$	$1.0X10^{7}$	$2.7X10^{-4}$
As-74	-	$1.0X10^{1}$	$2.7X10^{-10}$	$1.0X10^{6}$	$2.7X10^{-5}$
As-76	-	$1.0X10^{2}$	$2.7X10^{-9}$	$1.0X10^{5}$	$2.7X10^{-6}$
As-77	-	$1.0X10^{3}$	$2.7X10^{-8}$	$1.0X10^{6}$	$2.7X10^{-5}$
At-211	Astatine (85)	$1.0X10^{3}$	$2.7X10^{-8}$	$1.0X10^{7}$	$2.7X10^{-4}$
Au-193	Gold (79)	$1.0X10^{2}$	$2.7X10^{-9}$	$1.0X10^{7}$	$2.7X10^{-4}$
Au-194	-	$1.0X10^{1}$	$2.7X10^{-10}$	$1.0X10^{6}$	$2.7X10^{-5}$
Au-195	-	$1.0X10^{2}$	$2.7X10^{-9}$	$1.0X10^{7}$	$2.7X10^{-4}$
Au-198	-	$1.0X10^{2}$	$2.7X10^{-9}$	$1.0X10^{6}$	$2.7X10^{-5}$
Au-199	-	$1.0X10^{2}$	$2.7X10^{-9}$	$1.0X10^{6}$	$2.7X10^{-5}$
Ba-131	Barium (56)	$1.0X10^{2}$	$2.7X10^{-9}$	$1.0X10^{6}$	$2.7X10^{-5}$
Ba-133	-	$1.0X10^{2}$	$2.7X10^{-9}$	$1.0X10^{6}$	$2.7X10^{-5}$
Ba-133m	-	$1.0X10^{2}$	$2.7X10^{-9}$	$1.0X10^{6}$	$2.7X10^{-5}$
Ba-140 (b)	-	$1.0X10^{1}$	$2.7X10^{-10}$	$1.0X10^{5}$	$2.7X10^{-6}$
Be-7	Beryllium (4)	$1.0X10^{3}$	$2.7X10^{-8}$	$1.0X10^{7}$	$2.7X10^{-4}$
Be-10	-	$1.0X10^{4}$	$2.7X10^{-7}$	$1.0X10^{6}$	$2.7X10^{-5}$
Bi-205	Bismuth (83)	$1.0X10^{1}$	$2.7X10^{-10}$	$1.0X10^{6}$	$2.7X10^{-5}$
Bi-206	-	$1.0X10^{1}$	$2.7X10^{-10}$	$1.0X10^{5}$	$2.7X10^{-6}$
Bi-207	-	$1.0X10^{1}$	$2.7X10^{-10}$	$1.0X10^{6}$	$2.7X10^{-5}$
Bi-210	-	$1.0X10^{3}$	$2.7X10^{-8}$	$1.0X10^{6}$	$2.7X10^{-5}$
Bi-210m	-	$1.0X10^{1}$	$2.7X10^{-10}$	$1.0X10^{5}$	$2.7X10^{-6}$
Bi-212 (b)	-	$1.0X10^{1}$	$2.7X10^{-10}$	$1.0X10^{5}$	$2.7X10^{-6}$
Bk-247	Berkelium (97)	1.0	$2.7X10^{-11}$	$1.0X10^{4}$	$2.7X10^{-7}$
Bk-249	-	$1.0X10^{3}$	$2.7X10^{-8}$	$1.0X10^{6}$	$2.7X10^{-5}$
Br-76	Bromine (35)	$1.0X10^{1}$	$2.7X10^{-10}$	$1.0X10^{5}$	$2.7X10^{-6}$
Br-77	-	$1.0X10^{2}$	$2.7X10^{-9}$	$1.0X10^{6}$	$2.7X10^{-5}$
Br-82	-	$1.0X10^{1}$	$2.7X10^{-10}$	$1.0X10^{6}$	$2.7X10^{-5}$
C-11	Carbon (6)	$1.0X10^{1}$	$2.7X10^{-10}$	$1.0X10^{6}$	$2.7X10^{-5}$
C-14	-	$1.0X10^{4}$	$2.7X10^{-7}$	$1.0X10^{7}$	$2.7X10^{-4}$
Ca-41	Calcium (20)	$1.0X10^{5}$	$2.7X10^{-6}$	$1.0X10^{7}$	$2.7X10^{-4}$
Ca-45	-	$1.0X10^{4}$	$2.7X10^{-7}$	$1.0X10^{7}$	$2.7X10^{-4}$
Ca-47	-	$1.0X10^{1}$	$2.7X10^{-10}$	$1.0X10^{6}$	$2.7X10^{-5}$
Cd-109	Cadmium (48)	$1.0X10^{4}$	$2.7X10^{-7}$	$1.0X10^{6}$	$2.7X10^{-5}$
Cd-113m	-	$1.0X10^{3}$	$2.7X10^{-8}$	$1.0X10^{6}$	$2.7X10^{-5}$
Cd-115	-	$1.0X10^{2}$	$2.7X10^{-9}$	$1.0X10^{6}$	$2.7X10^{-5}$
Cd-115m	-	$1.0X10^{3}$	$2.7X10^{-8}$	$1.0X10^{6}$	$2.7X10^{-5}$
Ce-139	Cerium (58)	$1.0X10^{2}$	$2.7X10^{-9}$	$1.0X10^{6}$	$2.7X10^{-5}$
Ce-141	-	$1.0X10^{2}$	$2.7X10^{-9}$	$1.0X10^{7}$	$2.7X10^{-4}$
Ce-143	-	$1.0X10^{2}$	$2.7X10^{-9}$	$1.0X10^{6}$	$2.7X10^{-5}$
Ce-144 (b)	-	$1.0X10^{2}$	$2.7X10^{-9}$	$1.0X10^{5}$	$2.7X10^{-6}$
Cf-248	Californium (98)	$1.0X10^{1}$	$2.7X10^{-10}$	$1.0X10^{4}$	$2.7X10^{-7}$
Cf-249	-	1.0	$2.7X10^{-11}$	$1.0X10^{3}$	$2.7X10^{-8}$
Cf-250	-	$1.0X10^{1}$	$2.7X10^{-10}$	$1.0X10^{4}$	$2.7X10^{-7}$
Cf-251	-	1.0	$2.7X10^{-11}$	$1.0X10^{3}$	$2.7X10^{-8}$
Cf-252	-	$1.0X10^{1}$	$2.7X10^{-10}$	$1.0X10^{4}$	$2.7X10^{-7}$

Symbol of radionuclide	Element and atomic number	Activity concentration for exempt material (Bq/g)	Activity concentration for exempt material (Ci/g)	Activity limit for exempt consign-ment (Bq)	Activity limit for exempt consign-ment (Ci)
Cf-253	-	$1.0X10^{2}$	$2.7X10^{-9}$	$1.0X10^{5}$	$2.7X10^{-6}$
Cf-254	-	1.0	$2.7X10^{-11}$	$1.0X10^{3}$	$2.7X10^{-8}$
Cl-36	Chlorine (17)	$1.0X10^{4}$	$2.7X10^{-7}$	$1.0X10^{6}$	$2.7X10^{-5}$
Cl-38	-	$1.0X10^{1}$	$2.7X10^{-10}$	$1.0X10^{5}$	$2.7X10^{-6}$
Cm-240	Curium (96)	$1.0X10^{2}$	$2.7X10^{-9}$	$1.0X10^{5}$	$2.7X10^{-6}$
Cm-241	-	$1.0X10^{2}$	$2.7X10^{-9}$	$1.0X10^{6}$	$2.7X10^{-5}$
Cm-242	-	$1.0X10^{2}$	$2.7X10^{-9}$	$1.0X10^{5}$	$2.7X10^{-6}$
Cm-243	-	1.0	$2.7X10^{-11}$	$1.0X10^{4}$	$2.7X10^{-7}$
Cm-244	-	$1.0X10^{1}$	$2.7X10^{-10}$	$1.0X10^{4}$	$2.7X10^{-7}$
Cm-245	-	1.0	$2.7X10^{-11}$	$1.0X10^{3}$	$2.7X10^{-8}$
Cm-246	-	1.0	$2.7X10^{-11}$	$1.0X10^{3}$	$2.7X10^{-8}$
Cm-247	-	1.0	$2.7X10^{-11}$	$1.0X10^{4}$	$2.7X10^{-7}$
Cm-248	-	1.0	$2.7X10^{-11}$	$1.0X10^{3}$	$2.7X10^{-8}$
Co-55	Cobalt (27)	$1.0X10^{1}$	$2.7X10^{-10}$	$1.0X10^{6}$	$2.7X10^{-5}$
Co-56	-	$1.0X10^{1}$	$2.7X10^{-10}$	$1.0X10^{5}$	$2.7X10^{-6}$
Co-57	-	$1.0X10^{2}$	$2.7X10^{-9}$	$1.0X10^{6}$	$2.7X10^{-5}$
Co-58	-	$1.0X10^{1}$	$2.7X10^{-10}$	$1.0X10^{6}$	$2.7X10^{-5}$
Co-58m	-	$1.0X10^{4}$	$2.7X10^{-7}$	$1.0X10^{7}$	$2.7X10^{-4}$
Co-60	-	$1.0X10^{1}$	$2.7X10^{-10}$	$1.0X10^{5}$	$2.7X10^{-6}$
Cr-51	Chromium (24)	$1.0X10^{3}$	$2.7X10^{-8}$	$1.0X10^{7}$	$2.7X10^{-4}$
Cs-129	Cesium (55)	$1.0X10^{2}$	$2.7X10^{-9}$	$1.0X10^{5}$	$2.7X10^{-6}$
Cs-131	-	$1.0X10^{3}$	$2.7X10^{-8}$	$1.0X10^{6}$	$2.7X10^{-5}$
Cs-132	-	$1.0X10^{1}$	$2.7X10^{-10}$	$1.0X10^{5}$	$2.7X10^{-6}$
Cs-134	-	$1.0X10^{1}$	$2.7X10^{-10}$	$1.0X10^{4}$	$2.7X10^{-7}$
Cs-134m	-	$1.0X10^{3}$	$2.7X10^{-8}$	$1.0X10^{5}$	$2.7X10^{-6}$
Cs-135	-	$1.0X10^{4}$	$2.7X10^{-7}$	$1.0X10^{7}$	$2.7X10^{-4}$
Cs-136	-	$1.0X10^{1}$	$2.7X10^{-10}$	$1.0X10^{5}$	$2.7X10^{-6}$
Cs-137 (b)	-	$1.0X10^{1}$	$2.7X10^{-10}$	$1.0X10^{4}$	$2.7X10^{-7}$
Cu-64	Copper (29)	$1.0X10^{2}$	$2.7X10^{-9}$	$1.0X10^{6}$	$2.7X10^{-5}$
Cu-67	-	$1.0X10^{2}$	$2.7X10^{-9}$	$1.0X10^{6}$	$2.7X10^{-5}$
Dy-159	Dysprosium (66)	$1.0X10^{3}$	$2.7X10^{-8}$	$1.0X10^{7}$	$2.7X10^{-4}$
Dy-165	-	$1.0X10^{3}$	$2.7X10^{-8}$	$1.0X10^{6}$	$2.7X10^{-5}$
Dy-166	-	$1.0X10^{3}$	$2.7X10^{-8}$	$1.0X10^{6}$	$2.7X10^{-5}$
Er-169	Erbium (68)	$1.0X10^{4}$	$2.7X10^{-7}$	$1.0X10^{7}$	$2.7X10^{-4}$
Er-171	-	$1.0X10^{2}$	$2.7X10^{-9}$	$1.0X10^{6}$	$2.7X10^{-5}$
Eu-147	Europium (63)	$1.0X10^{2}$	$2.7X10^{-9}$	$1.0X10^{6}$	$2.7X10^{-5}$
Eu-148	-	$1.0X10^{1}$	$2.7X10^{-10}$	$1.0X10^{6}$	$2.7X10^{-5}$
Eu-149	-	$1.0X10^{2}$	$2.7X10^{-9}$	$1.0X10^{7}$	$2.7X10^{-4}$
Eu-150 (short lived)	-	$1.0X10^{3}$	$2.7X10^{-8}$	$1.0X10^{6}$	$2.7X10^{-5}$
Eu-150 (long lived)	-	$1.0X10^{1}$	$2.7X10^{-10}$	$1.0X10^{6}$	$2.7X10^{-5}$
Eu-152	-	$1.0X10^{1}$	$2.7X10^{-10}$	$1.0X10^{6}$	$2.7X10^{-5}$
Eu-152m	-	$1.0X10^{2}$	$2.7X10^{-9}$	$1.0X10^{6}$	$2.7X10^{-5}$
Eu-154	-	$1.0X10^{1}$	$2.7X10^{-10}$	$1.0X10^{6}$	$2.7X10^{-5}$
Eu-155	-	$1.0X10^{2}$	$2.7X10^{-9}$	$1.0X10^{7}$	$2.7X10^{-4}$
Eu-156	-	$1.0X10^{1}$	$2.7X10^{-10}$	$1.0X10^{6}$	$2.7X10^{-5}$
F-18	Fluorine (9)	$1.0X10^{1}$	$2.7X10^{-10}$	$1.0X10^{6}$	$2.7X10^{-5}$
Fe-52	Iron (26)	$1.0X10^{1}$	$2.7X10^{-10}$	$1.0X10^{6}$	$2.7X10^{-5}$
Fe-55	-	$1.0X10^{4}$	$2.7X10^{-7}$	$1.0X10^{6}$	$2.7X10^{-5}$
Fe-59	-	$1.0X10^{1}$	$2.7X10^{-10}$	$1.0X10^{6}$	$2.7X10^{-5}$
Fe-60	-	$1.0X10^{2}$	$2.7X10^{-9}$	$1.0X10^{5}$	$2.7X10^{-6}$
Ga-67	Gallium (31)	$1.0X10^{2}$	$2.7X10^{-9}$	$1.0X10^{6}$	$2.7X10^{-5}$
Ga-68	-	$1.0X10^{1}$	$2.7X10^{-10}$	$1.0X10^{5}$	$2.7X10^{-6}$
Ga-72	-	$1.0X10^{1}$	$2.7X10^{-10}$	$1.0X10^{5}$	$2.7X10^{-6}$
Gd-146	Gadolinium (64)	$1.0X10^{1}$	$2.7X10^{-10}$	$1.0X10^{6}$	$2.7X10^{-5}$
Gd-148	-	$1.0X10^{1}$	$2.7X10^{-10}$	$1.0X10^{4}$	$2.7X10^{-7}$
Gd-153	-	$1.0X10^{2}$	$2.7X10^{-9}$	$1.0X10^{7}$	$2.7X10^{-4}$
Gd-159	-	$1.0X10^{3}$	$2.7X10^{-8}$	$1.0X10^{6}$	$2.7X10^{-5}$
Ge-68	Germanium (32)	$1.0X10^{1}$	$2.7X10^{-10}$	$1.0X10^{5}$	$2.7X10^{-6}$
Ge-71	-	$1.0X10^{4}$	$2.7X10^{-7}$	$1.0X10^{8}$	$2.7X10^{-3}$
Ge-77	-	$1.0X10^{1}$	$2.7X10^{-10}$	$1.0X10^{5}$	$2.7X10^{-6}$
Hf-172	Hafnium (72)	$1.0X10^{1}$	$2.7X10^{-10}$	$1.0X10^{6}$	$2.7X10^{-5}$
Hf-175	-	$1.0X10^{2}$	$2.7X10^{-9}$	$1.0X10^{6}$	$2.7X10^{-5}$
Hf-181	-	$1.0X10^{1}$	$2.7X10^{-10}$	$1.0X10^{6}$	$2.7X10^{-5}$
Hf-182	-	$1.0X10^{2}$	$2.7X10^{-9}$	$1.0X10^{6}$	$2.7X10^{-5}$
Hg-194	Mercury (80)	$1.0X10^{1}$	$2.7X10^{-10}$	$1.0X10^{6}$	$2.7X10^{-5}$
Hg-195m	-	$1.0X10^{2}$	$2.7X10^{-9}$	$1.0X10^{6}$	$2.7X10^{-5}$

Symbol of radionuclide	Element and atomic number	Activity concentration for exempt material (Bq/g)	Activity concentration for exempt material (Ci/g)	Activity limit for exempt consign-ment (Bq)	Activity limit for exempt consign-ment (Ci)
Hg-197	-	$1.0X10^{2}$	$2.7X10^{-9}$	$1.0X10^{7}$	$2.7X10^{-4}$
Hg-197m	-	$1.0X10^{2}$	$2.7X10^{-9}$	$1.0X10^{6}$	$2.7X10^{-5}$
Hg-203	-	$1.0X10^{2}$	$2.7X10^{-9}$	$1.0X10^{5}$	$2.7X10^{-6}$
Ho-166	Holmium (67)	$1.0X10^{3}$	$2.7X10^{-8}$	$1.0X10^{5}$	$2.7X10^{-6}$
Ho-166m	-	$1.0X10^{1}$	$2.7X10^{-10}$	$1.0X10^{6}$	$2.7X10^{-5}$
I-123	Iodine (53)	$1.0X10^{2}$	$2.7X10^{-9}$	$1.0X10^{7}$	$2.7X10^{-4}$
I-124	-	$1.0X10^{1}$	$2.7X10^{-10}$	$1.0X10^{6}$	$2.7X10^{-5}$
I-125	-	$1.0X10^{3}$	$2.7X10^{-8}$	$1.0X10^{6}$	$2.7X10^{-5}$
I-126	-	$1.0X10^{2}$	$2.7X10^{-9}$	$1.0X10^{6}$	$2.7X10^{-5}$
I-129	-	$1.0X10^{2}$	$2.7X10^{-9}$	$1.0X10^{5}$	$2.7X10^{-6}$
I-131	-	$1.0X10^{2}$	$2.7X10^{-9}$	$1.0X10^{6}$	$2.7X10^{-5}$
I-132	-	$1.0X10^{1}$	$2.7X10^{-10}$	$1.0X10^{5}$	$2.7X10^{-6}$
I-133	-	$1.0X10^{1}$	$2.7X10^{-10}$	$1.0X10^{6}$	$2.7X10^{-5}$
I-134	-	$1.0X10^{1}$	$2.7X10^{-10}$	$1.0X10^{5}$	$2.7X10^{-6}$
I-135	-	$1.0X10^{1}$	$2.7X10^{-10}$	$1.0X10^{6}$	$2.7X10^{-5}$
In-111	Indium (49)	$1.0X10^{2}$	$2.7X10^{-9}$	$1.0X10^{6}$	$2.7X10^{-5}$
In-113m	-	$1.0X10^{2}$	$2.7X10^{-9}$	$1.0X10^{6}$	$2.7X10^{-5}$
In-114m	-	$1.0X10^{2}$	$2.7X10^{-9}$	$1.0X10^{6}$	$2.7X10^{-5}$
In-115m	-	$1.0X10^{2}$	$2.7X10^{-9}$	$1.0X10^{6}$	$2.7X10^{-5}$
Ir-189	Iridium (77)	$1.0X10^{2}$	$2.7X10^{-9}$	$1.0X10^{7}$	$2.7X10^{-4}$
Ir-190	-	$1.0X10^{1}$	$2.7X10^{-10}$	$1.0X10^{6}$	$2.7X10^{-5}$
Ir-192	-	$1.0X10^{1}$	$2.7X10^{-10}$	$1.0X10^{4}$	$2.7X10^{-7}$
Ir-194	-	$1.0X10^{2}$	$2.7X10^{-9}$	$1.0X10^{5}$	$2.7X10^{-6}$
K-40	Potassium (19)	$1.0X10^{2}$	$2.7X10^{-9}$	$1.0X10^{6}$	$2.7X10^{-5}$
K-42	-	$1.0X10^{2}$	$2.7X10^{-9}$	$1.0X10^{6}$	$2.7X10^{-5}$
K-43	-	$1.0X10^{1}$	$2.7X10^{-10}$	$1.0X10^{6}$	$2.7X10^{-5}$
Kr-81	Krypton (36)	$1.0X10^{4}$	$2.7X10^{-7}$	$1.0X10^{7}$	$2.7X10^{-4}$
Kr-85	-	$1.0X10^{5}$	$2.7X10^{-6}$	$1.0X10^{4}$	$2.7X10^{-7}$
Kr-85m	-	$1.0X10^{3}$	$2.7X10^{-8}$	$1.0X10^{10}$	$2.7X10^{-1}$
Kr-87	-	$1.0X10^{2}$	$2.7X10^{-9}$	$1.0X10^{9}$	$2.7X10^{-2}$
La-137	Lanthanum (57)	$1.0X10^{3}$	$2.7X10^{-8}$	$1.0X10^{7}$	$2.7X10^{-4}$
La-140	-	$1.0X10^{1}$	$2.7X10^{-10}$	$1.0X10^{5}$	$2.7X10^{-6}$
Lu-172	Lutetium (71)	$1.0X10^{1}$	$2.7X10^{-10}$	$1.0X10^{6}$	$2.7X10^{-5}$
Lu-173	-	$1.0X10^{2}$	$2.7X10^{-9}$	$1.0X10^{7}$	$2.7X10^{-4}$
Lu-174	-	$1.0X10^{2}$	$2.7X10^{-9}$	$1.0X10^{7}$	$2.7X10^{-4}$
Lu-174m	-	$1.0X10^{2}$	$2.7X10^{-9}$	$1.0X10^{7}$	$2.7X10^{-4}$
Lu-177	-	$1.0X10^{3}$	$2.7X10^{-8}$	$1.0X10^{7}$	$2.7X10^{-4}$
Mg-28	Magnesium (12)	$1.0X10^{1}$	$2.7X10^{-10}$	$1.0X10^{5}$	$2.7X10^{-6}$
Mn-52	Manganese (25)	$1.0X10^{1}$	$2.7X10^{-10}$	$1.0X10^{5}$	$2.7X10^{-6}$
Mn-53	-	$1.0X10^{4}$	$2.7X10^{-7}$	$1.0X10^{9}$	$2.7X10^{-2}$
Mn-54	-	$1.0X10^{1}$	$2.7X10^{-10}$	$1.0X10^{6}$	$2.7X10^{-5}$
Mn-56	-	$1.0X10^{1}$	$2.7X10^{-10}$	$1.0X10^{5}$	$2.7X10^{-6}$
Mo-93	Molybdenum (42)	$1.0X10^{3}$	$2.7X10^{-8}$	$1.0X10^{8}$	$2.7X10^{-3}$
Mo-99	-	$1.0X10^{2}$	$2.7X10^{-9}$	$1.0X10^{6}$	$2.7X10^{-5}$
N-13	Nitrogen (7)	$1.0X10^{2}$	$2.7X10^{-9}$	$1.0X10^{9}$	$2.7X10^{-2}$
Na-22	Sodium (11)	$1.0X10^{1}$	$2.7X10^{-10}$	$1.0X10^{6}$	$2.7X10^{-5}$
Na-24	-	$1.0X10^{1}$	$2.7X10^{-10}$	$1.0X10^{5}$	$2.7X10^{-6}$
Nb-93m	Niobium (41)	$1.0X10^{4}$	$2.7X10^{-7}$	$1.0X10^{7}$	$2.7X10^{-4}$
Nb-94	-	$1.0X10^{1}$	$2.7X10^{-10}$	$1.0X10^{6}$	$2.7X10^{-5}$
Nb-95	-	$1.0X10^{1}$	$2.7X10^{-10}$	$1.0X10^{6}$	$2.7X10^{-5}$
Nb-97	-	$1.0X10^{1}$	$2.7X10^{-10}$	$1.0X10^{6}$	$2.7X10^{-5}$
Nd-147	Neodymium (60)	$1.0X10^{2}$	$2.7X10^{-9}$	$1.0X10^{6}$	$2.7X10^{-5}$
Nd-149	-	$1.0X10^{2}$	$2.7X10^{-9}$	$1.0X10^{6}$	$2.7X10^{-5}$
Ni-59	Nickel (28)	$1.0X10^{4}$	$2.7X10^{-7}$	$1.0X10^{8}$	$2.7X10^{-3}$
Ni-63	-	$1.0X10^{5}$	$2.7X10^{-6}$	$1.0X10^{8}$	$2.7X10^{-3}$
Ni-65	-	$1.0X10^{1}$	$2.7X10^{-10}$	$1.0X10^{6}$	$2.7X10^{-5}$
Np-235	Neptunium (93)	$1.0X10^{3}$	$2.7X10^{-8}$	$1.0X10^{7}$	$2.7X10^{-4}$
Np-236 (short-lived)	-	$1.0X10^{3}$	$2.7X10^{-8}$	$1.0X10^{7}$	$2.7X10^{-4}$
Np-236 (long-lived)	-	$1.0X10^{2}$	$2.7X10^{-9}$	$1.0X10^{5}$	$2.7X10^{-6}$
Np-237 (b)	-	1.0	$2.7X10^{-11}$	$1.0X10^{3}$	$2.7X10^{-8}$
Np-239	-	$1.0X10^{2}$	$2.7X10^{-9}$	$1.0X10^{7}$	$2.7X10^{-4}$
Os-185	Osmium (76)	$1.0X10^{1}$	$2.7X10^{-10}$	$1.0X10^{6}$	$2.7X10^{-5}$
Os-191	-	$1.0X10^{2}$	$2.7X10^{-9}$	$1.0X10^{7}$	$2.7X10^{-4}$
Os-191m	-	$1.0X10^{3}$	$2.7X10^{-8}$	$1.0X10^{7}$	$2.7X10^{-4}$
Os-193	-	$1.0X10^{2}$	$2.7X10^{-9}$	$1.0X10^{6}$	$2.7X10^{-5}$
Os-194	-	$1.0X10^{2}$	$2.7X10^{-9}$	$1.0X10^{5}$	$2.7X10^{-6}$

Symbol of radionuclide	Element and atomic number	Activity concentration for exempt material (Bq/g)	Activity concentration for exempt material (Ci/g)	Activity limit for exempt consign-ment (Bq)	Activity limit for exempt consign-ment (Ci)
P-32	Phosphorus (15)	$1.0X10^{3}$	$2.7X10^{-8}$	$1.0X10^{5}$	$2.7X10^{-6}$
P-33	-	$1.0X10^{5}$	$2.7X10^{-6}$	$1.0X10^{8}$	$2.7X10^{-3}$
Pa-230	Protactinium (91)	$1.0X10^{1}$	$2.7X10^{-10}$	$1.0X10^{6}$	$2.7X10^{-5}$
Pa-231	-	1.0	$2.7X10^{-11}$	$1.0X10^{3}$	$2.7X10^{-8}$
Pa-233	-	$1.0X10^{2}$	$2.7X10^{-9}$	$1.0X10^{7}$	$2.7X10^{-4}$
Pb-201	Lead (82)	$1.0X10^{1}$	$2.7X10^{-10}$	$1.0X10^{6}$	$2.7X10^{-5}$
Pb-202	-	$1.0X10^{3}$	$2.7X10^{-8}$	$1.0X10^{6}$	$2.7X10^{-5}$
Pb-203	-	$1.0X10^{2}$	$2.7X10^{-9}$	$1.0X10^{6}$	$2.7X10^{-5}$
Pb-205	-	$1.0X10^{4}$	$2.7X10^{-7}$	$1.0X10^{7}$	$2.7X10^{-4}$
Pb-210 (b)	-	$1.0X10^{1}$	$2.7X10^{-10}$	$1.0X10^{4}$	$2.7X10^{-7}$
Pb-212 (b)	-	$1.0X10^{1}$	$2.7X10^{-10}$	$1.0X10^{5}$	$2.7X10^{-6}$
Pd-103	Palladium (46)	$1.0X10^{3}$	$2.7X10^{-8}$	$1.0X10^{8}$	$2.7X10^{-3}$
Pd-107	-	$1.0X10^{5}$	$2.7X10^{-6}$	$1.0X10^{8}$	$2.7X10^{-3}$
Pd-109	-	$1.0X10^{3}$	$2.7X10^{-8}$	$1.0X10^{6}$	$2.7X10^{-5}$
Pm-143	Promethium (61)	$1.0X10^{2}$	$2.7X10^{-9}$	$1.0X10^{6}$	$2.7X10^{-5}$
Pm-144	-	$1.0X10^{1}$	$2.7X10^{-10}$	$1.0X10^{6}$	$2.7X10^{-5}$
Pm-145	-	$1.0X10^{3}$	$2.7X10^{-8}$	$1.0X10^{7}$	$2.7X10^{-4}$
Pm-147	-	$1.0X10^{4}$	$2.7X10^{-7}$	$1.0X10^{7}$	$2.7X10^{-4}$
Pm-148m	-	$1.0X10^{1}$	$2.7X10^{-10}$	$1.0X10^{6}$	$2.7X10^{-5}$
Pm-149	-	$1.0X10^{3}$	$2.7X10^{-8}$	$1.0X10^{6}$	$2.7X10^{-5}$
Pm-151	-	$1.0X10^{2}$	$2.7X10^{-9}$	$1.0X10^{6}$	$2.7X10^{-5}$
Po-210	Polonium (84)	$1.0X10^{1}$	$2.7X10^{-10}$	$1.0X10^{4}$	$2.7X10^{-7}$
Pr-142	Praseodymium (59)	$1.0X10^{2}$	$2.7X10^{-9}$	$1.0X10^{5}$	$2.7X10^{-6}$
Pr-143	-	$1.0X10^{4}$	$2.7X10^{-7}$	$1.0X10^{6}$	$2.7X10^{-5}$
Pt-188	Platinum (78)	$1.0X10^{1}$	$2.7X10^{-10}$	$1.0X10^{6}$	$2.7X10^{-5}$
Pt-191	-	$1.0X10^{2}$	$2.7X10^{-9}$	$1.0X10^{6}$	$2.7X10^{-5}$
Pt-193	-	$1.0X10^{4}$	$2.7X10^{-7}$	$1.0X10^{7}$	$2.7X10^{-4}$
Pt-193m	-	$1.0X10^{3}$	$2.7X10^{-8}$	$1.0X10^{7}$	$2.7X10^{-4}$
Pt-195m	-	$1.0X10^{2}$	$2.7X10^{-9}$	$1.0X10^{6}$	$2.7X10^{-5}$
Pt-197	-	$1.0X10^{3}$	$2.7X10^{-8}$	$1.0X10^{6}$	$2.7X10^{-5}$
Pt-197m	-	$1.0X10^{2}$	$2.7X10^{-9}$	$1.0X10^{6}$	$2.7X10^{-5}$
Pu-236	Plutonium (94)	$1.0X10^{1}$	$2.7X10^{-10}$	$1.0X10^{4}$	$2.7X10^{-7}$
Pu-237	-	$1.0X10^{3}$	$2.7X10^{-8}$	$1.0X10^{7}$	$2.7X10^{-4}$
Pu-238	-	1.0	$2.7X10^{-11}$	$1.0X10^{4}$	$2.7X10^{-7}$
Pu-239	-	1.0	$2.7X10^{-11}$	$1.0X10^{4}$	$2.7X10^{-7}$
Pu-240	-	1.0	$2.7X10^{-11}$	$1.0X10^{3}$	$2.7X10^{-8}$
Pu-241	-	$1.0X10^{2}$	$2.7X10^{-9}$	$1.0X10^{5}$	$2.7X10^{-6}$
Pu-242	-	1.0	$2.7X10^{-11}$	$1.0X10^{4}$	$2.7X10^{-7}$
Pu-244	-	1.0	$2.7X10^{-11}$	$1.0X10^{4}$	$2.7X10^{-7}$
Ra-223 (b)	Radium (88)	$1.0X10^{2}$	$2.7X10^{-9}$	$1.0X10^{5}$	$2.7X10^{-6}$
Ra-224 (b)	-	$1.0X10^{1}$	$2.7X10^{-10}$	$1.0X10^{5}$	$2.7X10^{-6}$
Ra-225	-	$1.0X10^{2}$	$2.7X10^{-9}$	$1.0X10^{5}$	$2.7X10^{-6}$
Ra-226 (b)	-	$1.0X10^{1}$	$2.7X10^{-10}$	$1.0X10^{4}$	$2.7X10^{-7}$
Ra-228 (b)	-	$1.0X10^{1}$	$2.7X10^{-10}$	$1.0X10^{5}$	$2.7X10^{-6}$
Rb-81	Rubidium (37)	$1.0X10^{1}$	$2.7X10^{-10}$	$1.0X10^{6}$	$2.7X10^{-5}$
Rb-83	-	$1.0X10^{2}$	$2.7X10^{-9}$	$1.0X10^{6}$	$2.7X10^{-5}$
Rb-84	-	$1.0X10^{1}$	$2.7X10^{-10}$	$1.0X10^{6}$	$2.7X10^{-5}$
Rb-86	-	$1.0X10^{2}$	$2.7X10^{-9}$	$1.0X10^{5}$	$2.7X10^{-6}$
Rb-87	-	$1.0X10^{4}$	$2.7X10^{-7}$	$1.0X10^{7}$	$2.7X10^{-4}$
Rb (nat)	-	$1.0X10^{4}$	$2.7X10^{-7}$	$1.0X10^{7}$	$2.7X10^{-4}$
Re-184	Rhenium (75)	$1.0X10^{1}$	$2.7X10^{-10}$	$1.0X10^{6}$	$2.7X10^{-5}$
Re-184m	-	$1.0X10^{2}$	$2.7X10^{-9}$	$1.0X10^{6}$	$2.7X10^{-5}$
Re-186	-	$1.0X10^{3}$	$2.7X10^{-8}$	$1.0X10^{6}$	$2.7X10^{-5}$
Re-187	-	$1.0X10^{6}$	$2.7X10^{-5}$	$1.0X10^{9}$	$2.7X10^{-2}$
Re-188	-	$1.0X10^{2}$	$2.7X10^{-9}$	$1.0X10^{5}$	$2.7X10^{-6}$
Re-189	-	$1.0X10^{2}$	$2.7X10^{-9}$	$1.0X10^{6}$	$2.7X10^{-5}$
Re (nat)	-	$1.0X10^{6}$	$2.7X10^{-5}$	$1.0X10^{9}$	$2.7X10^{-2}$
Rh-99	Rhodium (45)	$1.0X10^{1}$	$2.7X10^{-10}$	$1.0X10^{6}$	$2.7X10^{-5}$
Rh-101	-	$1.0X10^{2}$	$2.7X10^{-9}$	$1.0X10^{7}$	$2.7X10^{-4}$
Rh-102	-	$1.0X10^{1}$	$2.7X10^{-10}$	$1.0X10^{6}$	$2.7X10^{-5}$
Rh-102m	-	$1.0X10^{2}$	$2.7X10^{-9}$	$1.0X10^{6}$	$2.7X10^{-5}$
Rh-103m	-	$1.0X10^{4}$	$2.7X10^{-7}$	$1.0X10^{8}$	$2.7X10^{-3}$
Rh-105	-	$1.0X10^{2}$	$2.7X10^{-9}$	$1.0X10^{7}$	$2.7X10^{-4}$
Rn-222 (b)	Radon (86)	$1.0X10^{1}$	$2.7X10^{-10}$	$1.0X10^{8}$	$2.7X10^{-3}$
Ru-97	Ruthenium (44)	$1.0X10^{2}$	$2.7X10^{-9}$	$1.0X10^{7}$	$2.7X10^{-4}$
Ru-103	-	$1.0X10^{2}$	$2.7X10^{-9}$	$1.0X10^{6}$	$2.7X10^{-5}$
Ru-105	-	$1.0X10^{1}$	$2.7X10^{-10}$	$1.0X10^{6}$	$2.7X10^{-5}$
Ru-106 (b)	-	$1.0X10^{2}$	$2.7X10^{-9}$	$1.0X10^{5}$	$2.7X10^{-6}$

Symbol of radionuclide	Element and atomic number	Activity concentration for exempt material (Bq/g)	Activity concentration for exempt material (Ci/g)	Activity limit for exempt consign-ment (Bq)	Activity limit for exempt consign-ment (Ci)
S-35	Sulphur (16)	$1.0X10^{5}$	$2.7X10^{-6}$	$1.0X10^{8}$	$2.7X10^{-3}$
Sb-122	Antimony (51)	$1.0X10^{2}$	$2.7X10^{-9}$	$1.0X10^{4}$	$2.7X10^{-7}$
Sb-124	-	$1.0X10^{1}$	$2.7X10^{-10}$	$1.0X10^{6}$	$2.7X10^{-5}$
Sb-125	-	$1.0X10^{2}$	$2.7X10^{-9}$	$1.0X10^{6}$	$2.7X10^{-5}$
Sb-126	-	$1.0X10^{1}$	$2.7X10^{-10}$	$1.0X10^{5}$	$2.7X10^{-6}$
Sc-44	Scandium (21)	$1.0X10^{1}$	$2.7X10^{-10}$	$1.0X10^{5}$	$2.7X10^{-6}$
Sc-46	-	$1.0X10^{1}$	$2.7X10^{-10}$	$1.0X10^{6}$	$2.7X10^{-5}$
Sc-47	-	$1.0X10^{2}$	$2.7X10^{-9}$	$1.0X10^{6}$	$2.7X10^{-5}$
Sc-48	-	$1.0X10^{1}$	$2.7X10^{-10}$	$1.0X10^{5}$	$2.7X10^{-6}$
Se-75	Selenium (34)	$1.0X10^{2}$	$2.7X10^{-9}$	$1.0X10^{6}$	$2.7X10^{-5}$
Se-79	-	$1.0X10^{4}$	$2.7X10^{-7}$	$1.0X10^{7}$	$2.7X10^{-4}$
Si-31	Silicon (14)	$1.0X10^{3}$	$2.7X10^{-8}$	$1.0X10^{6}$	$2.7X10^{-5}$
Si-32	-	$1.0X10^{3}$	$2.7X10^{-8}$	$1.0X10^{6}$	$2.7X10^{-5}$
Sm-145	Samarium (62)	$1.0X10^{2}$	$2.7X10^{-9}$	$1.0X10^{7}$	$2.7X10^{-4}$
Sm-147	-	$1.0X10^{1}$	$2.7X10^{-10}$	$1.0X10^{4}$	$2.7X10^{-7}$
Sm-151	-	$1.0X10^{4}$	$2.7X10^{-7}$	$1.0X10^{8}$	$2.7X10^{-3}$
Sm-153	-	$1.0X10^{2}$	$2.7X10^{-9}$	$1.0X10^{6}$	$2.7X10^{-5}$
Sn-113	Tin (50)	$1.0X10^{3}$	$2.7X10^{-8}$	$1.0X10^{7}$	$2.7X10^{-4}$
Sn-117m	-	$1.0X10^{2}$	$2.7X10^{-9}$	$1.0X10^{6}$	$2.7X10^{-5}$
Sn-119m	-	$1.0X10^{3}$	$2.7X10^{-8}$	$1.0X10^{7}$	$2.7X10^{-4}$
Sn-121m	-	$1.0X10^{3}$	$2.7X10^{-8}$	$1.0X10^{7}$	$2.7X10^{-4}$
Sn-123	-	$1.0X10^{3}$	$2.7X10^{-8}$	$1.0X10^{6}$	$2.7X10^{-5}$
Sn-125	-	$1.0X10^{2}$	$2.7X10^{-9}$	$1.0X10^{5}$	$2.7X10^{-6}$
Sn-126	-	$1.0X10^{1}$	$2.7X10^{-10}$	$1.0X10^{5}$	$2.7X10^{-6}$
Sr-82	Strontium (38)	$1.0X10^{1}$	$2.7X10^{-10}$	$1.0X10^{5}$	$2.7X10^{-6}$
Sr-85	-	$1.0X10^{2}$	$2.7X10^{-9}$	$1.0X10^{6}$	$2.7X10^{-5}$
Sr-85m	-	$1.0X10^{2}$	$2.7X10^{-9}$	$1.0X10^{7}$	$2.7X10^{-4}$
Sr-87m	-	$1.0X10^{2}$	$2.7X10^{-9}$	$1.0X10^{6}$	$2.7X10^{-5}$
Sr-89	-	$1.0X10^{3}$	$2.7X10^{-8}$	$1.0X10^{6}$	$2.7X10^{-5}$
Sr-90 (b)	-	$1.0X10^{2}$	$2.7X10^{-9}$	$1.0X10^{4}$	$2.7X10^{-7}$
Sr-91	-	$1.0X10^{1}$	$2.7X10^{-10}$	$1.0X10^{5}$	$2.7X10^{-6}$
Sr-92	-	$1.0X10^{1}$	$2.7X10^{-10}$	$1.0X10^{6}$	$2.7X10^{-5}$
T(H-3)	Tritium (1)	$1.0X10^{6}$	$2.7X10^{-5}$	$1.0X10^{9}$	$2.7X10^{-2}$
Ta-178 (long-lived)	Tantalum (73)	$1.0X10^{1}$	$2.7X10^{-10}$	$1.0X10^{6}$	$2.7X10^{-5}$
Ta-179	-	$1.0X10^{3}$	$2.7X10^{-8}$	$1.0X10^{7}$	$2.7X10^{-4}$
Ta-182	-	$1.0X10^{1}$	$2.7X10^{-10}$	$1.0X10^{4}$	$2.7X10^{-7}$
Tb-157	Terbium (65)	$1.0X10^{4}$	$2.7X10^{-7}$	$1.0X10^{7}$	$2.7X10^{-4}$
Tb-158	-	$1.0X10^{1}$	$2.7X10^{-10}$	$1.0X10^{6}$	$2.7X10^{-5}$
Tb-160	-	$1.0X10^{1}$	$2.7X10^{-10}$	$1.0X10^{6}$	$2.7X10^{-5}$
Tc-95m	Technetium (43)	$1.0X10^{1}$	$2.7X10^{-10}$	$1.0X10^{6}$	$2.7X10^{-5}$
Tc-96	-	$1.0X10^{1}$	$2.7X10^{-10}$	$1.0X10^{6}$	$2.7X10^{-5}$
Tc-96m	-	$1.0X10^{3}$	$2.7X10^{-8}$	$1.0X10^{7}$	$2.7X10^{-4}$
Tc-97	-	$1.0X10^{3}$	$2.7X10^{-8}$	$1.0X10^{8}$	$2.7X10^{-3}$
Tc-97m	-	$1.0X10^{3}$	$2.7X10^{-8}$	$1.0X10^{7}$	$2.7X10^{-4}$
Tc-98	-	$1.0X10^{1}$	$2.7X10^{-10}$	$1.0X10^{6}$	$2.7X10^{-5}$
Tc-99	-	$1.0X10^{4}$	$2.7X10^{-7}$	$1.0X10^{7}$	$2.7X10^{-4}$
Tc-99m	-	$1.0X10^{2}$	$2.7X10^{-9}$	$1.0X10^{7}$	$2.7X10^{-4}$
Te-121	Tellurium (52)	$1.0X10^{1}$	$2.7X10^{-10}$	$1.0X10^{6}$	$2.7X10^{-5}$
Te-121m	-	$1.0X10^{2}$	$2.7X10^{-9}$	$1.0X10^{5}$	$2.7X10^{-6}$
Te-123m	-	$1.0X10^{2}$	$2.7X10^{-9}$	$1.0X10^{7}$	$2.7X10^{-4}$
Te-125m	-	$1.0X10^{3}$	$2.7X10^{-8}$	$1.0X10^{7}$	$2.7X10^{-4}$
Te-127	-	$1.0X10^{3}$	$2.7X10^{-8}$	$1.0X10^{6}$	$2.7X10^{-5}$
Te-127m	-	$1.0X10^{3}$	$2.7X10^{-8}$	$1.0X10^{7}$	$2.7X10^{-4}$
Te-129	-	$1.0X10^{2}$	$2.7X10^{-9}$	$1.0X10^{6}$	$2.7X10^{-5}$
Te-129m	-	$1.0X10^{3}$	$2.7X10^{-8}$	$1.0X10^{6}$	$2.7X10^{-5}$
Te-131m	-	$1.0X10^{1}$	$2.7X10^{-10}$	$1.0X10^{6}$	$2.7X10^{-5}$
Te-132	-	$1.0X10^{2}$	$2.7X10^{-9}$	$1.0X10^{7}$	$2.7X10^{-4}$
Th-227	Thorium (90)	$1.0X10^{1}$	$2.7X10^{-10}$	$1.0X10^{4}$	$2.7X10^{-7}$
Th-228 (b)	-	1.0	$2.7X10^{-11}$	$1.0X10^{4}$	$2.7X10^{-7}$
Th-229 (b)	-	1.0	$2.7X10^{-11}$	$1.0X10^{3}$	$2.7X10^{-8}$
Th-230	-	1.0	$2.7X10^{-11}$	$1.0X10^{4}$	$2.7X10^{-7}$
Th-231	-	$1.0X10^{3}$	$2.7X10^{-8}$	$1.0X10^{7}$	$2.7X10^{-4}$
Th-232	-	$1.0X10^{1}$	$2.7X10^{-10}$	$1.0X10^{4}$	$2.7X10^{-7}$
Th-234 (b)	-	$1.0X10^{3}$	$2.7X10^{-8}$	$1.0X10^{5}$	$2.7X10^{-6}$
Th (nat) (b)	-	1.0	$2.7X10^{-11}$	$1.0X10^{3}$	$2.7X10^{-8}$
Ti-44	Titanium (22)	$1.0X10^{1}$	$2.7X10^{-10}$	$1.0X10^{5}$	$2.7X10^{-6}$
Tl-200	Thallium (81)	$1.0X10^{1}$	$2.7X10^{-10}$	$1.0X10^{6}$	$2.7X10^{-5}$

Symbol of radionuclide	Element and atomic number	Activity concentration for exempt material (Bq/g)	Activity concentration for exempt material (Ci/g)	Activity limit for exempt consign-ment (Bq)	Activity limit for exempt consign-ment (Ci)
Tl-201	-	$1.0X10^{2}$	$2.7X10^{-9}$	$1.0X10^{6}$	$2.7X10^{-5}$
Tl-202	-	$1.0X10^{2}$	$2.7X10^{-9}$	$1.0X10^{6}$	$2.7X10^{-5}$
Tl-204	-	$1.0X10^{4}$	$2.7X10^{-7}$	$1.0X10^{4}$	$2.7X10^{-7}$
Tm-167	Thulium (69)	$1.0X10^{2}$	$2.7X10^{-9}$	$1.0X10^{6}$	$2.7X10^{-5}$
Tm-170	-	$1.0X10^{3}$	$2.7X10^{-8}$	$1.0X10^{6}$	$2.7X10^{-5}$
Tm-171	-	$1.0X10^{4}$	$2.7X10^{-7}$	$1.0X10^{8}$	$2.7X10^{-3}$
U-230 (fast lung absorption) (b), (d)	Uranium (92)	$1.0X10^{1}$	$2.7X10^{-10}$	$1.0X10^{5}$	$2.7X10^{-6}$
U-230 (medium lung absorp-tion) (e)	-	$1.0X10^{1}$	$2.7X10^{-10}$	$1.0X10^{4}$	$2.7X10^{-7}$
U-230 (slow lung absorption) (f)	-	$1.0X10^{1}$	$2.7X10^{-10}$	$1.0X10^{4}$	$2.7X10^{-7}$
U-232 (fast lung absorption) (b), (d)	-	1.0	$2.7X10^{-11}$	$1.0X10^{3}$	$2.7X10^{-8}$
U-232 (medium lung absorp-tion) (e)	-	$1.0X10^{1}$	$2.7X10^{-10}$	$1.0X10^{4}$	$2.7X10^{-7}$
U-232 (slow lung absorption) (f)	-	$1.0X10^{1}$	$2.7X10^{-10}$	$1.0X10^{4}$	$2.7X10^{-7}$
U-233 (fast lung absorption) (d)	-	$1.0X10^{1}$	$2.7X10^{-10}$	$1.0X10^{4}$	$2.7X10^{-7}$
U-233 (medium lung absorp-tion) (e)	-	$1.0X10^{2}$	$2.7X10^{-9}$	$1.0X10^{5}$	$2.7X10^{-6}$
U-233 (slow lung absorption) (f)	-	$1.0X10^{1}$	$2.7X10^{-10}$	$1.0X10^{5}$	$2.7X10^{-6}$
U-234 (fast lung absorption) (d)	-	$1.0X10^{1}$	$2.7X10^{-10}$	$1.0X10^{4}$	$2.7X10^{-7}$
U-234 (medium lung absorp-tion) (e)	-	$1.0X10^{2}$	$2.7X10^{-9}$	$1.0X10^{5}$	$2.7X10^{-6}$
U-234 (slow lung absorption) (f)	-	$1.0X10^{1}$	$2.7X10^{-10}$	$1.0X10^{5}$	$2.7X10^{-6}$
U-235 (all lung absorption types) (b), (d), (e), (f)	-	$1.0X10^{1}$	$2.7X10^{-10}$	$1.0X10^{4}$	$2.7X10^{-7}$
U-236 (fast lung absorption) (d)	-	$1.0X10^{1}$	$2.7X10^{-10}$	$1.0X10^{4}$	$2.7X10^{-7}$
U-236 (medium lung absorp-tion) (e)	-	$1.0X10^{2}$	$2.7X10^{-9}$	$1.0X10^{5}$	$2.7X10^{-6}$
U-236 (slow lung absorption) (f)	-	$1.0X10^{1}$	$2.7X10^{-10}$	$1.0X10^{4}$	$2.7X10^{-7}$
U-238 (all lung absorption types) (b), (d), (e), (f)	-	$1.0X10^{1}$	$2.7X10^{-10}$	$1.0X10^{4}$	$2.7X10^{-7}$
U (nat) (b)	-	1.0	$2.7X10^{-11}$	$1.0X10^{3}$	$2.7X10^{-8}$
U (enriched to 20% or less) (g)	-	1.0	$2.7X10^{-11}$	$1.0X10^{3}$	$2.7X10^{-8}$
U (dep)	-	1.0	$2.7X10^{-11}$	$1.0X10^{3}$	$2.7X10^{-8}$
V-48	Vanadium (23)	$1.0X10^{1}$	$2.7X10^{-10}$	$1.0X10^{5}$	$2.7X10^{-6}$
V-49	-	$1.0X10^{4}$	$2.7X10^{-7}$	$1.0X10^{7}$	$2.7X10^{-4}$
W-178	Tungsten (74)	$1.0X10^{1}$	$2.7X10^{-10}$	$1.0X10^{6}$	$2.7X10^{-5}$
W-181	-	$1.0X10^{3}$	$2.7X10^{-8}$	$1.0X10^{7}$	$2.7X10^{-4}$
W-185	-	$1.0X10^{4}$	$2.7X10^{-7}$	$1.0X10^{7}$	$2.7X10^{-4}$
W-187	-	$1.0X10^{2}$	$2.7X10^{-9}$	$1.0X10^{6}$	$2.7X10^{-5}$
W-188	-	$1.0X10^{2}$	$2.7X10^{-9}$	$1.0X10^{5}$	$2.7X10^{-6}$
Xe-122	Xenon (54)	$1.0X10^{2}$	$2.7X10^{-9}$	$1.0X10^{9}$	$2.7X10^{-2}$
Xe-123	-	$1.0X10^{2}$	$2.7X10^{-9}$	$1.0X10^{9}$	$2.7X10^{-2}$
Xe-127	-	$1.0X10^{3}$	$2.7X10^{-8}$	$1.0X10^{5}$	$2.7X10^{-6}$
Xe-131m	-	$1.0X10^{4}$	$2.7X10^{-7}$	$1.0X10^{4}$	$2.7X10^{-7}$
Xe-133	-	$1.0X10^{3}$	$2.7X10^{-8}$	$1.0X10^{4}$	$2.7X10^{-7}$
Xe-135	-	$1.0X10^{3}$	$2.7X10^{-8}$	$1.0X10^{10}$	$2.7X10^{-1}$
Y-87	Yttrium (39)	$1.0X10^{1}$	$2.7X10^{-10}$	$1.0X10^{6}$	$2.7X10^{-5}$
Y-88	-	$1.0X10^{1}$	$2.7X10^{-10}$	$1.0X10^{6}$	$2.7X10^{-5}$
Y-90	-	$1.0X10^{3}$	$2.7X10^{-8}$	$1.0X10^{5}$	$2.7X10^{-6}$
Y-91	-	$1.0X10^{3}$	$2.7X10^{-8}$	$1.0X10^{6}$	$2.7X10^{-5}$
Y-91m	-	$1.0X10^{2}$	$2.7X10^{-9}$	$1.0X10^{6}$	$2.7X10^{-5}$
Y-92	-	$1.0X10^{2}$	$2.7X10^{-9}$	$1.0X10^{5}$	$2.7X10^{-6}$
Y-93	-	$1.0X10^{2}$	$2.7X10^{-9}$	$1.0X10^{5}$	$2.7X10^{-6}$
Yb-169	Ytterbium (70)	$1.0X10^{2}$	$2.7X10^{-9}$	$1.0X10^{7}$	$2.7X10^{-4}$
Yb-175	-	$1.0X10^{3}$	$2.7X10^{-8}$	$1.0X10^{7}$	$2.7X10^{-4}$
Zn-65	Zinc (30)	$1.0X10^{1}$	$2.7X10^{-10}$	$1.0X10^{6}$	$2.7X10^{-5}$
Zn-69	-	$1.0X10^{4}$	$2.7X10^{-7}$	$1.0X10^{6}$	$2.7X10^{-5}$
Zn-69m	-	$1.0X10^{2}$	$2.7X10^{-9}$	$1.0X10^{6}$	$2.7X10^{-5}$
Zr-88	Zirconium (40)	$1.0X10^{2}$	$2.7X10^{-9}$	$1.0X10^{6}$	$2.7X10^{-5}$
Zr-93 (b)	-	$1.0X10^{3}$	$2.7X10^{-8}$	$1.0X10^{7}$	$2.7X10^{-4}$
Zr-95	-	$1.0X10^{1}$	$2.7X10^{-10}$	$1.0X10^{6}$	$2.7X10^{-5}$
Zr-97 (b)	-	$1.0X10^{1}$	$2.7X10^{-10}$	$1.0X10^{5}$	$2.7X10^{-6}$

[a](Reserved)

[b] Parent nuclides and their progeny included in secular equilibrium are listed in the following:

Sr-90	Y-90
Zr-93	Nb-93m
Zr-97	Nb-97
Ru-106	Rh-106
Cs-137	Ba-137m
Ce-134	La-134
Ce-144	Pr-144
Ba-140	La-140
Bi-212	Tl-208 (0.36), Po-212 (0.64)
Pb-210	Bi-210, Po-210
Pb-212	Bi-212, Tl-208 (0.36), Po-212 (0.64)
Rn-220	Po-216
Rn-222	Po-218, Pb-214, Bi-214, Po-214
Ra-223	Rn-219, Po-215, Pb-211, Bi-211, Tl-207
Ra-224	Rn-220, Po-216, Pb-212, Bi-212, Tl-208 (0.36), Po-212 (0.64)
Ra-226	Rn-222, Po-218, Pb-214, Bi-214, Po-214, Pb-210, Bi-210, Po-210
Ra-228	Ac-228
Th-226	Ra-222, Rn-218, Po-214
Th-228	Ra-224, Rn-220, Po-216, Pb-212, Bi-212, Tl-208 (0.36), Po-212 (0.64)
Th-229	Ra-225, Ac-225, Fr-221, At-217, Bi-213, Po-213, Pb-209
Th-nat	Ra-228, Ac-228, Th-228, Ra-224, Rn-220, Po-216, Pb-212, Bi-212, Tl-208 (0.36), Po-212 (0.64)
Th-234	Pa-234m
U-230	Th-226, Ra-222, Rn-218, Po-214
U-232	Th-228, Ra-224, Rn-220, Po-216, Pb-212, Bi-212, Tl-208 (0.36), Po-212 (0.64)
U-235	Th-231
U-238	Th-234, Pa-234m
U-nat	Th-234, Pa-234m, U-234, Th-230, Ra-226, Rn-222, Po-218, Pb-214, Bi-214, Po-214, Pb-210, Bi-210, Po-210
U-240	Np-240m
Np-237	Pa-233
Am-242m	Am-242
Am-243	Np-239

[c] (Reserved)

[d] These values apply only to compounds of uranium that take the chemical form of UF_6, UO_2F_2 and $UO_2(NO_3)_2$ in both normal and accident conditions of transport.

[e] These values apply only to compounds of uranium that take the chemical form of UO_3, UF_4, UCl_4 and hexavalent compounds in both normal and accident conditions of transport.

[f] These values apply to all compounds of uranium other than those specified in notes (d) and (e) of this table.

[g] These values apply to unirradiated uranium only.

Table A-3. General Values for A1 and A2

Contents	A_1 (TBq)	A_1 (Ci)	A_2 (TBq)	A_2 (Ci)	Activity concentration for exempt material (Bq/g)	Activity concentration for exempt material (Ci/g)	Activity limits for exempt consignments (Bq)	Activity limits for exempt consignments (Ci)
Only beta or gamma emitting radionuclides are known to be present	1×10^{-1}	2.7×10^{0}	2×10^{-2}	5.4×10^{-1}	1×10^{1}	2.7×10^{-10}	1×10^{4}	2.7×10^{-7}
Only alpha emitting radionuclides are known to be present	2×10^{-1}	5.4×10^{0}	9×10^{-5}	2.4×10^{-3}	1×10^{-1}	2.7×10^{-12}	1×10^{3}	2.7×10^{-8}
No relevant data are available	1×10^{-3}	2.7×10^{-2}	9×10^{-5}	2.4×10^{-3}	1×10^{-1}	2.7×10^{-12}	1×10^{3}	2.7×10^{-8}

Table A-4.
Activity-Mass Relationships for Uranium

Uranium Enrichment[1] wt % U-235 present	Specific Activity TBq/g	Specific Activity Ci/g
0.45	1.8×10^{-8}	5.0×10^{-7}
0.72	2.6×10^{-8}	7.1×10^{-7}
1	2.8×10^{-8}	7.6×10^{-7}
1.5	3.7×10^{-8}	1.0×10^{-6}
5	1.0×10^{-7}	2.7×10^{-6}
10	1.8×10^{-7}	4.8×10^{-6}
20	3.7×10^{-7}	1.0×10^{-5}
35	7.4×10^{-7}	2.0×10^{-5}
50	9.3×10^{-7}	2.5×10^{-5}
90	2.2×10^{-6}	5.8×10^{-5}
93	2.6×10^{-6}	7.0×10^{-5}
95	3.4×10^{-6}	9.1×10^{-5}

[1] The figures for uranium include representative values for the activity of the uranium-234 that is concentrated during the enrichment process.

[Statutory Authority: RCW 70.98.050. 08-09-093, § 246-231-200, filed 4/18/08, effective 5/19/08; 99-15-105, § 246-231-200, filed 7/21/99, effective 8/21/99.]

Chapter 246-232 WAC

RADIOACTIVE MATERIAL—LICENSING APPLICABILITY

WAC

246-232-001	Purpose and scope.
246-232-006	Exemption of certain source material.
246-232-007	Exemption of certain depleted uranium items.
246-232-008	Exemption of certain timepieces, hands or dials.
246-232-009	Exemption of certain items containing radioactive material.
246-232-010	Exempt concentrations and exempt quantities.
246-232-011	Exemption of certain self-luminous products containing radioactive material(s).
246-232-012	Exemption of certain gas and aerosol detectors containing radioactive material.
246-232-013	Exemption of certain resins containing scandium-46 and designed for sand consolidation in oil wells.
246-232-014	Exemption of C-14 urea diagnostic capsules for human use.
246-232-020	Types of licenses.
246-232-030	Prelicensing inspection.
246-232-040	Reciprocal recognition of licenses.
246-232-050	Terms and conditions of licenses.
246-232-060	Termination of licenses and decommissioning of sites and separate buildings or outdoor areas.
246-232-070	Modification and revocation of licenses.
246-232-080	Transfer of material.
246-232-090	Transportation.
246-232-120	Schedule B, exempt quantities of radioactive materials.
246-232-130	Schedule C, exempt concentrations.
246-232-140	Schedule D.
246-232-990	Fees.

DISPOSITION OF SECTIONS FORMERLY CODIFIED IN THIS CHAPTER

246-232-100	Requirements for users of the Washington commercial low-level waste disposal site. [Statutory Authority: RCW 43.70.040. 91-02-049 (Order 121), recodified as § 246-232-100, filed 12/27/90, effective 1/31/91. Statutory Authority: RCW 70.98.080 and chapter 70.121 RCW. 86-17-027 (Order 2406), § 402-19-530, filed 8/13/86. Statutory Authority: RCW 70.98.080. 83-19-050 (Order 2026), § 402-19-530, filed 9/16/83. Statutory Authority: RCW 70.98.050. 81-01-011 (Order 1570), § 402-19-530, filed 12/8/80. Statutory Authority: RCW 70.98.080. 80-02-080 (Order 1481), § 402-19-530, filed 1/21/80.] Repealed by 91-15-112 (Order 184), filed 7/24/91, effective 8/24/91. Statutory Authority: RCW 70.98.050 and 70.98.080.
246-232-110	Large volumes of naturally occurring material. [Statutory Authority: RCW 43.70.040. 91-02-049 (Order 121), recodified as § 246-232-110, filed 12/27/90, effective 1/31/91. Statutory Authority: RCW 70.98.080 and chapter 70.121 RCW. 86-17-027 (Order 2406), § 402-19-540, filed 8/13/86.] Repealed by 91-15-112 (Order 184), filed 7/24/91, effective 8/24/91. Statutory Authority: RCW 70.98.050 and 70.98.080.

WAC 246-232-001 Purpose and scope. (1) This chapter prescribes rules governing licensing of radioactive material. A person may not receive, possess, use, transfer, own or acquire radioactive material except as authorized in a specific or general license issued under chapters 246-233 or 246-235 WAC or as otherwise provided in this chapter.

(2) In addition to the requirements of this chapter, and chapters 246-233 or 246-235 WAC, all licensees must comply with chapters 246-220, 246-221, 246-222, 246-231, 246-247, and 246-254 WAC. Licensees engaged in the practice of nuclear medicine are subject to chapter 246-240 WAC, licensees engaged in industrial radiographic operations are subject to chapter 246-243 WAC, licensees using sealed sources in the healing arts are subject to chapter 246-240 WAC, licensees using radioactive material in well logging and subsurface tracer studies are subject to chapter 246-244 WAC, licensees engaged in land disposal of radioactive waste are subject to chapter 246-250 WAC, and licensees owning or operating uranium or thorium mills and associated mill tailings are subject to chapter 246-252 WAC.

[Statutory Authority: RCW 70.98.050. 06-05-019, § 246-232-001, filed 2/6/06, effective 3/9/06; 99-15-105, § 246-232-001, filed 7/21/99, effective 8/21/99. Statutory Authority: RCW 70.98.050 and 70.98.080. 91-15-112 (Order 184), § 246-232-001, filed 7/24/91, effective 8/24/91. Statutory Authority: RCW 43.70.040. 91-02-049 (Order 121), recodified as § 246-232-001, filed 12/27/90, effective 1/31/91. Statutory Authority: RCW 70.98.080. 83-19-050 (Order 2026), § 402-19-010, filed 9/16/83; 79-12-073 (Order 1459), § 402-19-010, filed 11/30/79, effective 1/1/80. Formerly chapter 402-20 WAC.]

WAC 246-232-006 Exemption of certain source material. (1) A person is exempt from this chapter and chapters 246-233 and 246-235 WAC to the extent that the person receives, possesses, uses, owns, or transfers source material in any chemical mixture, compound, solution or alloy in which the source material is by weight less than 1/20 of one percent (0.05 percent) of the mixture, compound, solution, or alloy.

(2) A person is exempt from this chapter and chapters 246-233 and 246-235 WAC to the extent that the person receives, possesses, uses or transfers unrefined and unprocessed ore containing source material, provided such person shall not refine or process such ore unless authorized to do so in a specific license.

(3) A person is exempt from this chapter and chapters 246-233 and 246-235 WAC to the extent that the person receives, possesses, uses or transfers:

(a) Any quantities of thorium contained in:

(i) Incandescent gas mantles;

(ii) Vacuum tubes;

(iii) Welding rods;

(iv) Electric lamps for illuminating purposes if each lamp contains fifty milligrams or less of thorium;

(v) Germicidal lamps, sunlamps and lamps for outdoor or industrial lighting if each lamp contains two grams or less of thorium;

(vi) Rare earth metals and compounds, mixtures, and products containing 0.25 percent or less by weight thorium, uranium, or any combination of these; or

(vii) Personnel neutron dosimeters if each dosimeter contains 50 milligrams or less of thorium;

(b) Source material contained in the following products:

(i) Glazed ceramic tableware if the glaze contains twenty percent or less by weight source material; and

(ii) Piezoelectric ceramic containing two percent or less by weight source material;

(c) Photographic film, negatives and prints containing uranium or thorium;

(d) Any finished product or part fabricated of, or containing, tungsten-thorium or magnesium-thorium alloys if the thorium content of the alloy is four percent or less by weight.

The exemption contained in this subparagraph shall not be deemed to authorize the chemical, physical or metallurgical treatment or processing of any such product or part;

(e) Thorium contained in finished optical lenses if each lens contains thirty percent or less by weight of thorium. The exemption contained in this subparagraph shall not be deemed to authorize either:

(i) The shaping, grinding or polishing of lens or manufacturing processes other than the assembly of such lens into optical systems and devices without alteration of the lens; or

(ii) The receipt, possession, use or transfer of thorium contained in contact lenses, or in spectacles, or in eyepieces in binoculars or other optical instruments;

(f) Uranium contained in detector heads for use in fire detection units if each detector head contains 0.005 microcuries or less of uranium; or

(g) Thorium contained in any finished aircraft engine part containing nickel-thoria alloy if:

(i) The thorium is dispersed in the nickel-thoria alloy in the form of finely divided thoria (thorium dioxide); and

(ii) The thorium content in the nickel-thoria alloy is four percent or less by weight.

(4) The exemptions in subsection (3) of this section do not authorize the manufacture of any of the products described.

[Statutory Authority: RCW 70.98.050. 01-02-068, § 246-232-006, filed 12/29/00, effective 1/29/01.]

WAC 246-232-007 Exemption of certain depleted uranium items. (1) A person is exempt from this chapter and chapters 246-233 and 246-235 WAC to the extent that the person receives, possesses, uses or transfers:

(a) Depleted uranium contained in counterweights installed in aircraft, rockets, projectiles and missiles, or stored or handled in connection with installation or removal of such counterweights if:

(i) The counterweights are manufactured in accordance with a specific license issued by the United States Nuclear Regulatory Commission authorizing distribution by the licensee pursuant to 10 C.F.R. Part 40;

(ii) Each counterweight has been impressed with the following legend clearly legible through any plating or other covering: "DEPLETED URANIUM"*;

(iii) Each counterweight is durably and legibly labeled or marked with the identification of the manufacturer and the statement: "UNAUTHORIZED ALTERATIONS PROHIBITED"*; and

(iv) The exemption contained in this subparagraph shall not be deemed to authorize the chemical, physical or metallurgical treatment or processing of any such counterweight other than repair or restoration of any plating or other covering;

*Note: The requirements specified in (c) (v) (B) and (C) of this subsection need not be met by counterweights manufactured prior to December 31, 1969: Provided, That such counterweights are impressed with the legend, "CAUTION - RADIOACTIVE MATERIAL - URANIUM," as previously required by the regulations.

(b) Natural or depleted uranium used as shielding constituting part of any shipping container which is conspicuously and legibly impressed with the legend "CAUTION - RADIOACTIVE SHIELDING - URANIUM" and the uranium metal is encased in mild steel or in an equally fire resistant metal of a minimum wall thickness of 3.2 millimeters.

(2) The exemptions in this subsection do not authorize the manufacture of any of the products described.

[Statutory Authority: RCW 70.98.050. 01-02-068, § 246-232-007, filed 12/29/00, effective 1/29/01.]

WAC 246-232-008 Exemption of certain timepieces, hands or dials. A person is exempt from these regulations to the extent the person receives, possesses, uses, transfers, owns or acquires, and does not apply radioactive material to, or incorporate radioactive material into, the following timepieces or hands or dials containing the following specified quantities of radioactive material and the following specified levels of radiation*:

*Note: Authority to transfer possession or control by the manufacturer, processor, or producer of any equipment, device, commodity, or other product containing source material or byproduct material whose subsequent possession, use, transfer and disposal by all other persons who are exempted from regulatory requirements may be obtained only from the United States Nuclear Regulatory Commission, Washington, D.C. 20555.

(1)(a) 25 millicuries or less of tritium per timepiece;

(b) 5 millicuries or less of tritium per hand;

(c) 15 millicuries or less of tritium per dial (bezels when used shall be considered as part of the dial);

(d) 100 microcuries or less of promethium-147 per watch or 200 microcuries or less of promethium-147 per any other timepiece;

(e) 20 microcuries or less of promethium-147 per watch hand or 40 microcuries or less of promethium-147 per other timepiece hand;

(f) 60 microcuries or less of promethium-147 per watch dial or 120 microcuries or less of promethium-147 per other timepiece dial (bezels when used shall be considered as part of the dial);

(2) The levels of radiation from hands and dials containing promethium-147 will not exceed, when measured through 50 milligrams per square centimeter of absorber:

(a) For wrist watches, 0.1 millirad per hour at 10 centimeters from any surface;

(b) For pocket watches, 0.1 millirad per hour at 1 centimeter from any surface;

(c) For any other timepiece, 0.2 millirad per hour at 10 centimeters from any surface.

(3) One microcurie of radium-226 per timepiece in timepieces manufactured prior to the effective date of these regulations.

[Statutory Authority: RCW 70.98.050. 01-02-068, § 246-232-008, filed 12/29/00, effective 1/29/01.]

WAC 246-232-009 Exemption of certain items containing radioactive material. A person is exempt from these regulations to the extent the person receives, possesses, uses, transfers, owns or acquires, and does not apply radioactive material to, or incorporate radioactive material into, the following products:*

*Note: Authority to transfer possession or control by the manufacturer, processor, or producer of any equipment, device, commodity, or other product containing source material or byproduct material whose subsequent possession, use, transfer

and disposal by all other persons who are exempted from regulatory requirements may be obtained only from the United States Nuclear Regulatory Commission, Washington, D.C. 20555.

(1) Lock illuminators containing 15 millicuries or less of tritium or 2 millicuries or less of promethium-147 installed in automobile locks. The levels of radiation from each lock illuminator containing promethium-147 will not exceed 1 millirad per hour at 1 centimeter from any surface when measured through 50 milligrams per square centimeter of absorber.

(2) Precision balances containing 1 millicurie or less of tritium per balance or 0.5 millicurie or less of tritium per balance part.

(3) Automobile shift quadrants containing 25 millicuries or less of tritium.

(4) Marine compasses containing 750 millicuries or less of tritium gas and other marine navigational instruments containing 250 millicuries or less of tritium gas.

(5) Thermostat dials and pointers containing 25 millicuries or less of tritium per thermostat.

(6) Electron tubes* if each tube contains no more than one of the following specified quantities of radioactive material and the levels of radiation from each electron tube do not exceed 1 millirad per hour at 1 centimeter from any surface when measured through 7 milligrams per square centimeter of absorber:

(a) 150 millicuries or less of tritium per microwave receiver protector tube or 10 millicuries or less of tritium per any other electron tube;

(b) 1 microcurie or less of cobalt-60;

(c) 5 microcuries or less of nickel-63;

(d) 30 microcuries or less of krypton-85;

(e) 5 microcuries or less of cesium-137;

(f) 30 microcuries or less of promethium-147;

(g) 1 microcurie or less of radium-226:

*Note: For purposes of this subdivision, "electron tubes" include spark gap tubes, power tubes, gas tubes including glow lamps, receiving tubes, microwave tubes, indicator tubes, pick-up tubes, radiation detection tubes, and any other completely sealed tube that is designed to conduct or control electrical currents.

(7) Ionizing radiation measuring instruments containing, for purposes of internal calibration or standardization, one or more but not to exceed 10 exempt sources of radioactive material.

(a) Each individual source shall not exceed 0.05 microcuries of americium-241 or the applicable exempt quantity set forth in WAC 246-232-120, Schedule B.

(b) An individual source may contain more than one radionuclide but the total quantity in the individual source shall not exceed unity based on the sum of the fractional parts of one or more of the exempt quantities set forth in WAC 246-232-120, Schedule B. For purposes of this subsection, 0.05 microcuries of americium-241 is considered an exempt quantity.

(8) Spark gap irradiators containing 1 microcurie or less of cobalt-60 per spark gap irradiator for use in electrically ignited fuel oil burners having a firing rate of at least three gallons (11.4 liters) per hour.

[Statutory Authority: RCW 70.98.050. 01-02-068, § 246-232-009, filed 12/29/00, effective 1/29/01.]

WAC 246-232-010 Exempt concentrations and exempt quantities. (1) Exempt concentrations.

(a) Except as provided in (b) of this subsection, a person is exempt from this chapter and chapters 246-233 and 246-235 WAC to the extent that the person receives, possesses, uses, transfers, owns or acquires products or materials containing radioactive material in concentrations less than or equal to those listed in WAC 246-232-130, Schedule C.

(b) No person may introduce radioactive material into a product or material, knowing or having reason to believe, that it will be transferred to persons exempt under (a) of this subsection or equivalent regulations of the United States Nuclear Regulatory Commission, any agreement state or licensing state, except in accordance with a specific license issued under WAC 246-235-105 or the general license provided in WAC 246-232-040.

(2) Exempt quantities.

(a) Except as provided in (b) and (c) of this subsection, a person is exempt from these regulations to the extent that such person receives, possesses, uses, transfers, owns or acquires radioactive material in individual quantities each of which is less than or equal to the applicable quantity set forth in WAC 246-232-120, Schedule B.

(b) This subsection does not authorize the production, packaging or repackaging of radioactive material for purposes of commercial distribution, or the incorporation of radioactive material into products intended for commercial distribution.

(c) No person may, for purposes of commercial distribution, transfer radioactive material in the individual quantities set forth in WAC 246-232-120, Schedule B, knowing or having reason to believe that such quantities of radioactive material will be transferred to persons exempt under subsection (2) of this section or equivalent regulations of the United States Nuclear Regulatory Commission or any agreement state or licensing state, except in accordance with a specific license issued by the United States Nuclear Regulatory Commission, under Section 32.18 of 10 CFR Part 32 or by the department under WAC 246-235-105 which license states that the radioactive material may be transferred by the licensee to persons exempt under subsection (2) of this section or the equivalent regulations of the United States Nuclear Regulatory Commission or any agreement state or licensing state.

[Statutory Authority: RCW 70.98.050. 01-02-068, § 246-232-010, filed 12/29/00, effective 1/29/01; 98-13-037, § 246-232-010, filed 6/8/98, effective 7/9/98. Statutory Authority: RCW 70.98.050 and 70.98.080. 91-15-112 (Order 184), § 246-232-010, filed 7/24/91, effective 8/24/91. Statutory Authority: RCW 43.70.040. 91-02-049 (Order 121), recodified as § 246-232-010, filed 12/27/90, effective 1/31/91. Statutory Authority: RCW 70.98.080. 87-01-031 (Order 2450), § 402-19-190, filed 12/11/86; 83-19-050 (Order 2026), § 402-19-190, filed 9/16/83. Statutory Authority: RCW 70.98.050. 81-01-011 (Order 1570), § 402-19-190, filed 12/8/80. Statutory Authority: RCW 70.98.080. 79-12-073 (Order 1459), § 402-19-190, filed 11/30/79, effective 1/1/80. Formerly WAC 402-20-190.]

WAC 246-232-011 Exemption of certain self-luminous products containing radioactive material(s). (1) Tritium, krypton-85 or promethium-147. A person is exempt from these regulations to the extent that the person receives, possesses, uses, transfers, owns or acquires, and does not manufacture, process, produce, or initially transfer for sale or distribution, self-luminous products containing tritium, kryp-

ton-85 or promethium-147 in self-luminous products manufactured, processed, produced, imported or initially transferred in accordance with a specific license issued by the United States Nuclear Regulatory Commission under Section 32.22 of 10 C.F.R. Part 32, which license authorizes the transfer of the product to persons who are exempt from regulatory requirements. The exemption in this subsection does not apply to tritium, krypton-85 or promethium-147 used in products primarily for frivolous purposes or in toys or adornments.

(2) Radium-226. A person is exempt from these regulations to the extent that the person receives, possesses, uses, transfers or owns articles containing less than 0.1 microcurie of radium-226 which were manufactured prior to October 1983.

[Statutory Authority: RCW 70.98.050. 01-02-068, § 246-232-011, filed 12/29/00, effective 1/29/01.]

WAC 246-232-012 Exemption of certain gas and aerosol detectors containing radioactive material. (1) A person is exempt from these regulations to the extent that the person receives, possesses, uses, transfers, owns or acquires, and does not manufacture, process or produce, radioactive material in gas and aerosol detectors designed to protect life or property from fires and airborne hazards if the detectors have been manufactured, imported, or transferred in accordance with a specific license issued by the United States Nuclear Regulatory Commission* or an agreement state, under Section 32.26 of 10 C.F.R. Part 32, or licensing state under WAC 246-235-105, which authorizes the transfer of the detectors to persons who are exempt from regulatory requirements.

*Note: Authority to transfer possession or control by the manufacturer, processor, or producer of any equipment, device, commodity, or other product containing source material or byproduct material whose subsequent possession, use, transfer and disposal by all other persons are exempted from regulatory requirements may be obtained only from the United States Nuclear Regulatory Commission, Washington, D.C. 20555.

(2) Gas and aerosol detectors previously manufactured and distributed to general licensees in accordance with a specific license issued by an agreement state shall be considered exempt under subsection (1) of this section if the device is labeled in accordance with the specific license authorizing distribution of the generally licensed device and if the device meets the requirements of WAC 246-235-105.

(3) Gas and aerosol detectors containing naturally occurring and accelerator-produced radioactive material (NARM) previously manufactured and distributed in accordance with a specific license issued by a licensing state shall be considered exempt under subsection (1) of this section if the device is labeled in accordance with the specific license authorizing distribution of the generally licensed device, and if the device meets the requirements of WAC 246-235-105.

[Statutory Authority: RCW 70.98.050. 01-02-068, § 246-232-012, filed 12/29/00, effective 1/29/01.]

WAC 246-232-013 Exemption of certain resins containing scandium-46 and designed for sand consolidation in oil wells. A person is exempt from these regulations to the extent that the person receives, possesses, uses, transfers, owns or acquires synthetic plastic resins containing scandium-46 that are designed for sand consolidation in oil wells. The resins shall have been manufactured or imported in accordance with a specific license issued by the United States Nuclear Regulatory Commission or shall have been manufactured in accordance with the specifications contained in a specific license issued by the department or any agreement state to the manufacturer of resins under licensing requirements equivalent to those in Sections 32.16 and 32.17 of 10 C.F.R. Part 32 of the regulations of the United States Nuclear Regulatory Commission. This exemption does not authorize the manufacture or initial transfer for sale or distribution of any resins containing scandium-46.

[Statutory Authority: RCW 70.98.050. 01-02-068, § 246-232-013, filed 12/29/00, effective 1/29/01.]

WAC 246-232-014 Exemption of C-14 urea diagnostic capsules for human use. (1) Except as provided in subsections (2) and (3) of this section, a person is exempt from the requirements for a license set forth in chapters 246-233 and 246-235 WAC if the person receives, possesses, uses, transfers, owns, or acquires capsules containing 37 kilobequerels (1 microcurie) carbon-14 urea (allowing for nominal variation that may occur during the manufacturing process) each, for "in vivo" diagnostic use for humans.

(2) A person who desires to use the capsules for research involving human subjects shall apply for and receive a specific license under chapters 246-240 and 246-235 WAC.

(3) A person who desires to manufacture, prepare, process, produce, package, repackage, or transfer for commercial distribution these capsules shall apply for and receive a specific license from the United States Nuclear Regulatory Commission under Section 32.21 of 10 C.F.R. Part 32.

(4) Nothing in this section relieves persons from complying with applicable United States Food and Drug Administration, other federal, and state requirements governing receipt, administration, and use of drugs.

[Statutory Authority: RCW 70.98.050. 06-05-019, § 246-232-014, filed 2/6/06, effective 3/9/06; 01-02-068, § 246-232-014, filed 12/29/00, effective 1/29/01.]

WAC 246-232-020 Types of licenses. Licenses for radioactive materials are of two types: General and specific.

(1) General licenses provided in chapter 246-233 WAC are effective without the filing of applications with the department or the issuance of licensing documents to the particular persons, although registration or the filing of a certificate with the department may be required by the particular general license. The general licensee is subject to all other applicable portions of these regulations and any limitations of the general license.

(2) Specific licenses require the submission of an application to the department and the issuance of a licensing document by the department. The licensee is subject to all applicable portions of these regulations as well as any limitations specified in the licensing document. (See chapter 246-235 WAC.)

[Statutory Authority: RCW 70.98.050. 04-04-055, § 246-232-020, filed 1/30/04, effective 3/1/04. Statutory Authority: RCW 70.98.050 and 70.98.-080. 91-15-112 (Order 184), § 246-232-020, filed 7/24/91, effective 8/24/91. Statutory Authority: RCW 43.70.040. 91-02-049 (Order 121), recodified as

§ 246-232-020, filed 12/27/90, effective 1/31/91. Statutory Authority: RCW 70.98.080. 79-12-073 (Order 1459), § 402-19-220, filed 11/30/79, effective 1/1/80. Formerly WAC 402-20-020.]

WAC 246-232-030 Prelicensing inspection. The department may verify information contained in applications and secure additional information deemed necessary to make a reasonable determination as to whether to issue a license and whether any special conditions should be attached thereto by visiting the facility or location where radioactive materials would be possessed or used, and by discussing details of the proposed possession or use of the radioactive materials with the applicant or representatives designated by the applicant. Such visits may be made by the department or its duly authorized representatives.

[Statutory Authority: RCW 43.70.040. 91-02-049 (Order 121), recodified as § 246-232-030, filed 12/27/90, effective 1/31/91. Statutory Authority: RCW 70.98.080. 79-12-073 (Order 1459), § 402-19-240, filed 11/30/79, effective 1/1/80. Formerly WAC 402-20-200.]

WAC 246-232-040 Reciprocal recognition of licenses. (1) Subject to these regulations, any person who holds a specific license from the United States Nuclear Regulatory Commission or any agreement state or licensing state, and issued by the agency having jurisdiction where the licensee maintains an office for directing the licensed activity and at which radiation safety records are normally maintained, is hereby granted a general license to conduct the activities authorized in such licensing document within this state for a period not in excess of one hundred eighty days in that twelve month period which commences the date approval is granted, and the appropriate fee received, by the department provided that:

(a) The licensing document does not limit the activity authorized by such document to specified installations or locations;

(b) The licensed activity is not conducted in an area under exclusive federal jurisdiction;

(c) The out-of-state licensee notifies the department in writing and pays or has paid the appropriate fee (refer to chapter 246-254 WAC), at least three days prior to each entry to the state to engage in such activity. The written notification must be sent to the Radioactive Materials Section, Department of Health, Mailstop 47827, Olympia, Washington 98504-7827 and the fee should be sent to Washington State Department of Health, Revenue Accounting, P.O. Box 1099, Olympia, Washington 98504. Such notification shall indicate the location, period, and type of proposed possession and use within the state, and shall be accompanied by copies of the pertinent licensing documents. If, for a specific case, the three-day period would impose an undue hardship on the out-of-state licensee, the licensee may, upon telephone application to the department (360-236-3220), obtain permission to proceed sooner. The department may waive the requirement for filing additional written notifications during the remainder of the twelve months following the receipt of the initial notification from a person engaging in activities under the general license provided in this subsection;

(d) The out-of-state licensee complies with all applicable regulations of the department and with all the terms and conditions of the licensing document, except any such terms and conditions which may be inconsistent with applicable regulations of the department;

(e) The out-of-state licensee supplies such other information as the department may request; and

(f) The out-of-state licensee shall not transfer or dispose of radioactive material possessed or used under the general license provided in this subsection except by transfer to a person:

(i) Specifically licensed by the department or by the United States Nuclear Regulatory Commission, an agreement state or a licensing state to receive such material; or

(ii) Exempt from the requirements for a license for such material under WAC 246-232-010(1).

(2) Notwithstanding the provisions of subsection (1) of this section, any person who holds a specific license issued by the United States Nuclear Regulatory Commission, an agreement state or a licensing state authorizing the holder to manufacture, transfer, install, or service a device described in WAC 246-233-020 within the areas subject to the jurisdiction of the licensing body is hereby granted a general license to install, transfer, demonstrate or service a device in this state in areas not under exclusive federal jurisdiction provided that:

(a) Such person shall file a report with the department within thirty days after the end of each calendar quarter in which any device is transferred to or installed in this state. Each such report shall identify each general licensee to whom such device is transferred by name and address, the type of device transferred, and the quantity and type of radioactive material contained in the device;

(b) The device has been manufactured, labeled, installed, and serviced in accordance with applicable provisions of the specific license issued to such person by the United States Nuclear Regulatory Commission, an agreement state or a licensing state;

(c) Such person shall assure that any labels required to be affixed to the device under regulations of the authority which licensed manufacture of the device bear a statement that "Removal of this label is prohibited"; and

(d) The holder of the specific license shall furnish to each general licensee to whom such device is transferred or on whose premises such device is installed a copy of the general license contained in WAC 246-233-020(4).

(3) The department may withdraw, limit, or qualify its acceptance of any specific license or equivalent licensing document issued by another agency, or any product distributed pursuant to such licensing document, upon determining that such action is necessary in order to prevent undue hazard to public health and safety or property.

[Statutory Authority: RCW 70.98.050. 04-04-055, § 246-232-040, filed 1/30/04, effective 3/1/04; 01-02-068, § 246-232-040, filed 12/29/00, effective 1/29/01; 99-15-105, § 246-232-040, filed 7/21/99, effective 8/21/99; 98-13-037, § 246-232-040, filed 6/8/98, effective 7/9/98. Statutory Authority: RCW 70.98.050 and 70.98.080. 91-15-112 (Order 184), § 246-232-040, filed 7/24/91, effective 8/24/91. Statutory Authority: RCW 43.70.040. 91-02-049 (Order 121), recodified as § 246-232-040, filed 12/27/90, effective 1/31/91. Statutory Authority: RCW 70.98.080. 87-01-031 (Order 2450), § 402-19-250, filed 12/11/86; 83-19-050 (Order 2026), § 402-19-250, filed 9/16/83. Statutory Authority: RCW 70.98.050. 81-01-011 (Order 1570), § 402-19-250, filed 12/8/80. Statutory Authority: RCW 70.98.080. 79-12-073 (Order 1459), § 402-19-250, filed 11/30/79, effective 1/1/80. Formerly WAC 402-20-210.]

WAC 246-232-050 Terms and conditions of licenses. (1) Each license issued pursuant to this part shall be subject to all the provisions of the act, as now or hereafter in effect, and to all rules, regulations, and orders of the department.

(2) No license issued or granted under chapters 246-233 and 246-235 WAC and no right to possess or utilize radioactive material granted by any license issued pursuant to chapters 246-233 and 246-235 WAC shall be transferred, assigned, or in any manner disposed, either voluntarily or involuntarily, directly or indirectly, through transfer of control of any license to any person unless the department shall, after securing full information find that the transfer is in accordance with the provisions of the act, and shall give its consent in writing.

(3) Each person licensed by the department pursuant to chapters 246-233 and 246-235 WAC shall confine use and possession of the material licensed to the locations and purposes authorized by the license.

(4) Approval of licensee's procedures by the department does not release the licensee from responsibility if adherence to these procedures results in undue exposure to individuals or loss of control of radioactive material.

(5) Each specific licensee shall notify the department of health, radiation protection, in writing, within five working days following the filing of a voluntary or involuntary petition for bankruptcy by or against:

(a) The licensee;

(b) A person controlling the licensee or listing the license or licensee as property of the estate; or

(c) An affiliate of the licensee.

(6) The specific licensee's bankruptcy notification must include:

(a) The bankruptcy court in which the petition for bankruptcy was filed;

(b) The date of the filing of the petition;

(c) A complete and detailed inventory of all radioactive material possessed under the license including nuclide, form, activity and planned disposition;

(d) An estimation of the type and quantities of radioactive material the licensee plans to continue to receive and/or use on a routine basis;

(e) A description of security and storage for the radioactive material currently possessed;

(f) A plan for radioactive waste disposal, the estimated completion date(s), and the cost;

(g) An evaluation of facility and equipment contamination, estimate of clean-up costs, and a decontamination plan which includes a thorough description of how the cleanup will be funded and how it will be accomplished;

(h) An organizational chart specifying sole owners, partnerships, or officers in the corporation who have legal and fiscal responsibilities for the licensee;

(i) A description of any other changes affecting the terms and conditions of the radioactive materials license.

(7) Each specific licensee shall notify the department within five working days if any items in subsection (6) of this section change during bankruptcy proceedings.

(8) The department will consider clean-up costs as part of the licensee's administrative costs if decontamination is necessary to comply with these regulations;

(9) Each general licensee that is required to register by WAC 246-233-020 (3)(k) shall notify the department of health, radiation protection, in writing, immediately following the filing of a voluntary or involuntary petition for bankruptcy by or against:

(a) The licensee;

(b) A person controlling the licensee or listing the license or licensee as property of the estate; or

(c) An affiliate of the licensee.

(10) The general licensee's bankruptcy notification must include:

(a) The bankruptcy court in which the petition for bankruptcy was filed; and

(b) The date of the filing of the petition.

(11) For the purposes of this section, "affiliate" means:

(a) A person as defined in WAC 246-220-010 that directly or indirectly owns, controls, or holds with power to vote, twenty percent or more of the outstanding voting securities of the licensee (unless that person holds such securities (i) in a fiduciary or agency capacity without sole discretionary power to vote such securities, or (ii) solely to secure a debt, if such person has not in fact exercised such power to vote);

(b) A corporation, twenty percent or more of whose outstanding voting securities are directly or indirectly owned, controlled, or held with power to vote, by the licensee;

(c) A person whose business is operated under a lease or operating agreement by a licensee, or person substantially all of whose property is operated under an operating agreement with the licensee; or

(d) A person that operates the business or substantially all of the property of the licensee under a lease or operating agreement.

[Statutory Authority: RCW 70.98.050. 04-04-055, § 246-232-050, filed 1/30/04, effective 3/1/04. Statutory Authority: RCW 70.98.050 and 70.98.-080. 92-06-008 (Order 245), § 246-232-050, filed 2/21/92, effective 3/23/92. Statutory Authority: RCW 43.70.040. 91-02-049 (Order 121), recodified as § 246-232-050, filed 12/27/90, effective 1/31/91. Statutory Authority: RCW 70.98.080. 87-01-031 (Order 2450), § 402-19-300, filed 12/11/86; 83-19-050 (Order 2026), § 402-19-300, filed 9/16/83. Statutory Authority: RCW 70.98.050. 81-01-011 (Order 1570), § 402-19-300, filed 12/8/80. Statutory Authority: RCW 70.98.080. 79-12-073 (Order 1459), § 402-19-300, filed 11/30/79, effective 1/1/80.]

WAC 246-232-060 Termination of licenses and decommissioning of sites and separate buildings or outdoor areas. (1) Each specific licensee shall immediately notify the department in writing when the licensee decides to permanently discontinue all activities involving materials authorized under the license and request termination of the license. This notification and request for termination of the license must include the reports and information specified in subsection (3)(c) and (d) of this section. The licensee is subject to the provisions of subsections (3) and (4) of this section, as applicable.

(2) No less than thirty days before the expiration date specified in a specific license, the licensee shall either:

(a) Submit an application for license renewal under WAC 246-235-050; or

(b) Notify the department in writing if the licensee decides not to renew the license.

(3) If a specific licensee does not submit an application for license renewal under WAC 246-235-050, the licensee shall on or before the expiration date specified in the license:

(a) Terminate use of radioactive material;

(b) Properly dispose of radioactive material;

(c) Submit a completed departmental form "Certificate of disposition of radioactive material" or equivalent; and

(d) Submit a radiation survey report to confirm the absence of radioactive materials or establish the levels of radioactive contamination, unless the department determines a radiation survey report is not necessary.

(i) If no radioactive contamination attributable to activities conducted under the license is detected, the licensee shall submit a certification that no detectable radioactive contamination was found. If the information submitted under this paragraph and subsection (3)(c) and (d) of this section is adequate, the department will notify the licensee in writing that the license is terminated.

(ii) If detectable levels of radioactive contamination attributable to activities conducted under the license are found, the license continues in effect beyond the expiration date, if necessary, with respect to possession of residual radioactive material present as contamination until the licensee meets the criteria established in chapter 246-246 WAC and the department notifies the licensee in writing that the license is terminated. During this time, the licensee is subject to the provisions of subsection (4) of this section. In addition to the information submitted under subsection (3)(c) and (d) of this section, the licensee shall submit a plan for decontamination, if necessary.

(4) Each specific licensee who possesses residual radioactive material under subsection (3)(d)(ii) of this section, following the expiration of the facility and/or equipment date specified in the license, shall:

(a) Be limited to actions, involving radioactive material related to decontamination and preparation for release in accordance with chapter 246-246 WAC; and

(b) Continue to control entry to restricted areas until:

(i) Such areas are suitable for release in accordance with chapter 246-246 WAC;

(ii) Contaminated equipment complies with guidance contained in WAC 246-232-140, Schedule D; and

(iii) The department notifies the licensee in writing that the license is terminated.

(5) Each general licensee licensed under the provisions of WAC 246-233-040, shall immediately notify the department in writing when the licensee decides to discontinue all activities involving radioactive materials authorized under the general license. Such notification shall include a description of how the generally licensed material was disposed and the results of facility surveys, if applicable, to confirm the absence of radioactive materials.

(6) Within sixty days of the occurrence of any of the following, each specific licensee shall provide notification to the department in writing of such occurrence, and either begin decommissioning its site, or any separate building or outdoor area that contains residual radioactivity so that the site, building, or outdoor area is suitable for release in accordance with chapter 246-246 WAC, or submit within twelve months of notification a decommissioning plan, if required by subsection (10)(a) of this section, and begin decommissioning upon approval of that plan if:

(a) The license has expired or has been revoked by the department; or

(b) The licensee has decided to permanently cease principal activities, as defined in this section, at the entire site or in any separate building or outdoor area that contains residual radioactivity such that the site, building, or outdoor area is unsuitable for release in accordance with chapter 246-246 WAC; or

(c) No principal activities under the license have been conducted for a period of twenty-four months; or

(d) No principal activities have been conducted for a period of twenty-four months in any separate building or outdoor area that contains residual radioactivity such that the building or outdoor area is unsuitable for release in accordance with chapter 246-246 WAC.

(7) As used in this section, principal activities means activities authorized by the license which are essential to achieving the purpose(s) for which the license was issued or amended. Storage during which no licensed material is accessed for use or disposal and activities incidental to decontamination or decommissioning are not principal activities.

(8) Coincident with the notification required by subsection (6) of this section, the licensee shall maintain in effect all decommissioning financial assurances established by the licensee pursuant to WAC 246-235-075 or as required by this section. The amount of the financial assurance must be increased, or may be decreased, as appropriate, to cover the detailed cost estimate for decommissioning established pursuant to subsection (10)(d)(v) of this section. Following approval of the decommissioning plan, a licensee may reduce the amount of the financial assurance as decommissioning proceeds and radiological contamination is reduced at the site with the approval of the department.

(9) The department may grant a request to extend the time periods established in subsection (6) of this section if the department determines that this relief is not detrimental to the public health and safety and is otherwise in the public interest. The request must be submitted no later than thirty days before notification pursuant to subsection (6) of this section. The schedule for decommissioning set forth in subsection (6) of this section may not commence until the department has made a determination on the request.

(10)(a) A decommissioning plan must be submitted if required by license condition or if the procedures and activities necessary to carry out decommissioning of the site or separate building or outdoor area have not been previously approved by the department and these procedures could increase potential health and safety impacts to workers or to the public, such as in any of the following cases:

(i) Procedures would involve techniques not applied routinely during cleanup or maintenance operations;

(ii) Workers would be entering areas not normally occupied where surface contamination and radiation levels are significantly higher than routinely encountered during operation;

(iii) Procedures could result in significantly greater airborne concentrations of radioactive materials than are present during operation; or

(iv) Procedures could result in significantly greater releases of radioactive material to the environment than those associated with operation.

(b) The department may approve an alternate schedule for submittal of a decommissioning plan required pursuant to subsection (6) of this section if the department determines that the alternative schedule is necessary to the effective conduct of decommissioning operations and presents no undue risk from radiation to the public health and safety and is otherwise in the public interest.

(c) Procedures such as those listed in (a) of this subsection with potential health and safety impacts may not be carried out prior to approval of the decommissioning plan.

(d) The proposed decommissioning plan for the site or separate building or outdoor area must include:

(i) A description of the conditions of the site or separate building or outdoor area sufficient to evaluate the acceptability of the plan;

(ii) A description of planned decommissioning activities;

(iii) A description of methods used to ensure protection of workers and the environment against radiation hazards during decommissioning;

(iv) A description of the planned final radiation survey;

(v) An updated detailed cost estimate for decommissioning, comparison of that estimate with present funds set aside for decommissioning, and a plan for assuring the availability of adequate funds for completion of decommissioning;

(vi) A description of the physical security plan and material control and accounting plan provisions in place during decommissioning;

(vii) For decommissioning plans calling for completion of decommissioning later than twenty-four months after plan approval, the plan shall include a justification for the delay based on the criteria in subsection (12) of this section.

(e) The proposed decommissioning plan will be approved by the department if the information therein demonstrates that the decommissioning will be completed as soon as practicable and that the health and safety of workers and the public will be adequately protected.

(11)(a) Except as provided in subsection (12) of this section, licensees shall complete decommissioning of the site or separate building or outdoor area as soon as practicable but no later than twenty-four months following the initiation of decommissioning.

(b) Except as provided in subsection (12) of this section, when decommissioning involves the entire site, the licensee shall request license termination as soon as practicable but no later than twenty-four months following the initiation of decommissioning.

(12) The department may approve a request for an alternative schedule for completion of decommissioning of the site or separate building or outdoor area, and license termination if appropriate, if the department determines that the alternative is warranted by consideration of the following:

(a) Whether it is technically feasible to complete decommissioning within the allotted twenty-four-month period;

(b) Whether sufficient waste disposal capacity is available to allow completion of decommissioning within the allotted twenty-four-month period;

(c) Whether a significant volume reduction in wastes requiring disposal will be achieved by allowing short-lived radionuclides to decay;

(d) Whether a significant reduction in radiation exposure to workers can be achieved by allowing short-lived radionuclides to decay; and

(e) Other site-specific factors which the department may consider appropriate on a case-by-case basis, such as the regulatory requirements of other government agencies, lawsuits, ground water treatment activities, monitored natural ground water restoration, actions that could result in more environmental harm than deferred cleanup, and other factors beyond the control of the licensee.

(13) As the final step in decommissioning, the licensee shall:

(a) Certify the disposition of all licensed material, including accumulated wastes, by submitting a completed certificate of disposition of radioactive material or equivalent information; and

(b) Conduct a radiation survey of the premises where the licensed activities were carried out and submit a report of the results of this survey, unless the licensee demonstrates in some other manner that the premises are suitable for release in accordance with the criteria for decommissioning in chapter 246-246 WAC. The licensee shall, as appropriate:

(i) Report levels of gamma radiation in units of millisieverts (microroentgen) per hour at one meter from surfaces, and report levels of radioactivity, including alpha and beta, in units of megabecquerels (disintegrations per minute or microcuries) per one hundred square centimeters—removable and fixed—for surfaces, megabecquerels (microcuries) per milliliter for water, and becquerels (picocuries) per gram for solids such as soils or concrete; and

(ii) Specify the survey instrument(s) used and certify that each instrument is properly calibrated and tested.

(14) Specific licenses, including expired licenses, will be terminated by written notice to the licensee when the department determines that:

(a) Radioactive material has been properly disposed;

(b) Reasonable effort has been made to eliminate residual radioactive contamination, if present; and

(c)(i) A radiation survey has been performed which demonstrates that the premises are suitable for release in accordance with the criteria for decommissioning in chapter 246-246 WAC; or

(ii) Other information submitted by the licensee is sufficient to demonstrate that the premises are suitable for release in accordance with the criteria for decommissioning in chapter 246-246 WAC; and

(d) Records required by subsections (16) and (18) of this section have been received.

(15) Specific licenses for uranium and thorium milling are exempt from subsections (6)(d), (9) and (10) of this section with respect to reclamation of tailings impoundments and/or waste disposal areas.

(16) Prior to license termination, each licensee authorized to possess radioactive material with a half-life greater than one hundred twenty days, in an unsealed form, shall forward the following records to the department:

(a) Records of disposal required by WAC 246-221-230 (8)(a); and

(b) Records of results required by WAC 246-221-230 (7)(h).

(17) If licensed activities are transferred or assigned in accordance with WAC 246-232-050(2), each licensee authorized to possess radioactive material, with a half-life greater than one hundred twenty days, in an unsealed form, shall transfer the following records to the new licensee and the new licensee will be responsible for maintaining these records until the license is terminated:

(a) Records of disposal required by WAC 246-221-230 (8)(a); and

(b) Records of results required by WAC 246-221-230 (7)(h).

(18) Prior to license termination, each licensee shall forward the records required by WAC 246-235-075(6) to the department.

[Statutory Authority: RCW 70.98.050. 04-04-055, § 246-232-060, filed 1/30/04, effective 3/1/04; 00-07-085, § 246-232-060, filed 3/15/00, effective 4/15/00; 99-15-105, § 246-232-060, filed 7/21/99, effective 8/21/99. Statutory Authority: RCW 70.98.050 and 70.98.080. 97-08-095, § 246-232-060, filed 4/2/97, effective 5/3/97; 91-15-112 (Order 184), § 246-232-060, filed 7/24/91, effective 8/24/91. Statutory Authority: RCW 43.70.040. 91-02-049 (Order 121), recodified as § 246-232-060, filed 12/27/90, effective 1/31/91. Statutory Authority: RCW 70.98.080. 83-19-050 (Order 2026), § 402-19-330, filed 9/16/83.]

WAC 246-232-070 Modification and revocation of licenses. (1) The terms and conditions of all licenses shall be subject to amendment, revision, or modification, or the license may be suspended or revoked by reason of amendments to the act, or by reason of rules, regulations, and orders issued by the department.

(2) Any license may be revoked, suspended, or modified, in whole or in part, for any material false statement in the application or any statement of fact required under provisions of the act, or because of conditions revealed by such application or statement of fact or any report, record, or inspection or other means which would warrant the department to refuse to grant a license on an original application, or for violation of, or failure to observe any of the terms and conditions of the act, or of the license, or of any rule, regulation, or order of the department.

(3) Except in cases of willful disregard for the regulations or applicable license conditions or those in which the public health, interest, or safety requires otherwise, no license shall be modified, suspended, or revoked unless, prior to the institution of proceedings therefore, facts or conduct which may warrant such action shall have been called to the attention of the licensee in writing and the licensee shall have been accorded an opportunity to demonstrate or achieve compliance with all lawful requirements.

[Statutory Authority: RCW 43.70.040. 91-02-049 (Order 121), recodified as § 246-232-070, filed 12/27/90, effective 1/31/91. Statutory Authority: RCW 70.98.080. 87-01-031 (Order 2450), § 402-19-350, filed 12/11/86; 83-19-050 (Order 2026), § 402-19-350, filed 9/16/83; 79-12-073 (Order 1459), § 402-19-350, filed 11/30/79, effective 1/1/80. Formerly WAC 402-20-180.]

WAC 246-232-080 Transfer of material. (1) No licensee shall transfer radioactive material except as authorized pursuant to this section.

(2) Except as otherwise provided in the license and subject to the provisions of this section, any licensee may transfer radioactive material:

(a) To the department. A licensee may transfer material to the department only after receiving prior approval from the department;

(b) To the United States Department of Energy;

(c) To any person exempt from the regulations in this part to the extent permitted under such exemption;

(d) To any person authorized to receive such material under terms of a general license or its equivalent, or a specific license or equivalent licensing document, issued by the department, the United States Nuclear Regulatory Commission, any agreement state or any licensing state, or to any person otherwise authorized to receive such material by the federal government or any agency thereof, the department, any agreement state or any licensing state; or

(e) As otherwise authorized by the department in writing.

(3) Before transferring radioactive material to a specific licensee of the department, the United States Nuclear Regulatory Commission, an agreement state or a licensing state, or to a general licensee who is required to register with the department, the United States Nuclear Regulatory Commission, an agreement state or a licensing state prior to receipt of the radioactive material, the licensee transferring the material shall verify that the transferee's license authorizes the receipt of the type, form, and quantity of radioactive material to be transferred.

(4) The following methods for the verification required by subsection (3) of this section are acceptable:

(a) The transferor may obtain for possession, and read, a current copy of the transferee's specific license or registration certificate;

(b) The transferor may obtain for possession a written certification from the transferee that the transferee is authorized by license or registration certificate to receive the type, form, and quantity of radioactive material to be transferred, specifying the license or registration certificate number, issuing agency, and expiration date;

(c) For emergency shipments the transferor may accept oral certification by the transferee that the transferee is authorized by license or registration certificate to receive the type, form, and quantity of radioactive material to be transferred, specifying the license or registration certificate number, issuing agency, and expiration date: Provided, That the oral certification is confirmed in writing within ten days;

(d) The transferor may obtain other sources of information compiled by a reporting service from official records of the department, the United States Nuclear Regulatory Commission, the licensing agency of an agreement state or a licensing state as to the identity of licensees and the scope and expiration dates of licenses and registration; or

(e) When none of the methods of verification described in subsection (4) of this section are readily available or when a transferor desires to verify that information received by one of such methods is correct or up-to-date, the transferor may obtain and record confirmation from the department, the United States Nuclear Regulatory Commission, or the licensing agency of an agreement state or a licensing state that the transferee is licensed to receive the radioactive material.

(5) Preparation for shipment and transport of radioactive material shall be in accordance with the provisions of WAC 246-232-090.

(6) The requirements of subsection (4) of this section notwithstanding, no verification is required when returning used, unused or decayed sources of radiation to the original manufacturer, (e.g., industrial radiography sources, teletherapy sources, portable moisture/density gauge sources, fixed gauge sources, and Mo-99/Tc-99m generators).

[Statutory Authority: RCW 70.98.050 and 70.98.080. 91-15-112 (Order 184), § 246-232-080, filed 7/24/91, effective 8/24/91. Statutory Authority: RCW 43.70.040. 91-02-049 (Order 121), recodified as § 246-232-080, filed 12/27/90, effective 1/31/91. Statutory Authority: RCW 70.98.080. 87-01-031 (Order 2450), § 402-19-400, filed 12/11/86. Statutory Authority: RCW 70.98.050. 81-01-011 (Order 1570), § 402-19-400, filed 12/8/80. Statutory Authority: RCW 70.98.080. 79-12-073 (Order 1459), § 402-19-400, filed 11/30/79, effective 1/1/80. Formerly WAC 402-20-170.]

WAC 246-232-090 Transportation. No person shall deliver radioactive material to a carrier for transport or transport radioactive material except as authorized in a general or specific license issued by the department or as exempted in chapter 246-231 WAC. General licenses for transportation of radioactive material and other transportation requirements are found in chapter 246-231 WAC.

[Statutory Authority: RCW 70.98.050. 99-15-105, § 246-232-090, filed 7/21/99, effective 8/21/99. Statutory Authority: RCW 70.98.050 and 70.98.080. 91-15-112 (Order 184), § 246-232-090, filed 7/24/91, effective 8/24/91. Statutory Authority: RCW 43.70.040. 91-02-049 (Order 121), recodified as § 246-232-090, filed 12/27/90, effective 1/31/91. Statutory Authority: RCW 70.98.080. 83-19-050 (Order 2026), § 402-19-500, filed 9/16/83. Statutory Authority: RCW 70.98.050. 81-01-011 (Order 1570), § 402-19-500, filed 12/8/80. Statutory Authority: RCW 70.98.080. 79-12-073 (Order 1459), § 402-19-500, filed 11/30/79, effective 1/1/80. Formerly WAC 402-20-220.]

WAC 246-232-120 Schedule B, exempt quantities of radioactive materials. (See also WAC 246-232-010(2).)

Radioactive Material	Microcuries
Antimony-122 (Sb-122)	100
Antimony-124 (Sb-124)	10
Antimony-125 (Sb-125)	10
Arsenic-73 (As-73)	100
Arsenic-74 (As-74)	10
Arsenic-76 (As-76)	10
Arsenic-77 (As-77)	100
Barium-131 (Ba-131)	10
Barium-133 (Ba-133)	10
Barium-140 (Ba-140)	10
Bismuth-210 (Bi-210)	1
Bromine-82 (Br-82)	10
Cadmium-109 (Cd-109)	10
Cadmium-115m (Cd-115m)	10
Cadmium-115 (Cd-115)	100
Calcium-45 (Ca-45)	10
Calcium-47 (Ca-47)	10
Carbon-14 (C-14)	100
Cerium-141 (Ce-141)	100
Cerium-143 (Ce-143)	100
Cerium-144 (Ce-144)	1
Cesium-129 (Cs-129)	100
Cesium-131 (Cs-131)	1,000
Cesium-134m (Cs-134m)	100
Cesium-134 (Cs-134)	1
Cesium-135 (Cs-135)	10
Cesium-136 (Cs-136)	10
Cesium-137 (Cs-137)	10
Chlorine-36 (Cl-36)	10
Chlorine-38 (Cl-38)	10
Chromium-51 (Cr-51)	1,000
Cobalt-57 (Co-57)	100
Cobalt-58m (Co-58m)	10
Cobalt-58 (Co-58)	10
Cobalt-60 (Co-60)	1
Copper-64 (Cu-64)	100
Dysprosium-165 (Dy-165)	10
Dysprosium-166 (Dy-166)	100
Erbium-169 (Er-169)	100
Erbium-171 (Er-171)	100
Europium-152 (Eu-152) 9.2h	100
Europium-152 (Eu-152) 13 yr	1
Europium-154 (Eu-154)	1
Europium-155 (Eu-155)	10
Fluorine-18 (F-18)	1,000
Gadolinium-153 (Gd-153)	10
Gadolinium-159 (Gd-159)	100
Gallium-67 (Ga-67)	100
Gallium-72 (Ga-72)	10
Germanium-71 (Ge-71)	100
Gold-198 (Au-198)	100
Gold-199 (Au-199)	100
Hafnium-181 (Hf-181)	10
Holmium-166 (Ho-166)	100
Hydrogen-3 (H-3)	1,000
Indium-111 (In-111)	100
Indium-113m (In-113m)	100
Indium-114m (In-114m)	10
Indium-115m (In-115m)	100
Indium-115 (In-115)	10
Iodine-123 (I-123)	100
Iodine-125 (I-125)	1
Iodine-126 (I-126)	1
Iodine-129 (I-129)	0.1
Iodine-131 (I-131)	1
Iodine-132 (I-132)	10
Iodine-133 (I-133)	1
Iodine-134 (I-134)	10
Iodine-135 (I-135)	10
Iridium-192 (Ir-192)	10
Iridium-194 (Ir-194)	100
Iron-52 (Fe-52)	10
Iron-55 (Fe-55)	100
Iron-59 (Fe-59)	10
Krypton-85 (Kr-85)	100
Krypton-87 (Kr-87)	10
Lanthanum-140 (La-140)	10
Lutetium-177 (Lu-177)	100
Manganese-52 (Mn-52)	10
Manganese-54 (Mn-54)	10
Manganese-56 (Mn-56)	10
Mercury-197m (Hg-197m)	100
Mercury-197 (Hg-197)	100
Mercury-203 (Hg-203)	10
Molybdenum-99 (Mo-99)	100
Neodymium-147 (And-147)	100
Neodymium-149 (And-149)	100

Radioactive Material	Microcuries
Nickel-59 (Ni-59)	100
Nickel-63 (Ni-63)	10
Nickel-65 (Ni-65)	100
Niobium-93m (Nb-93m)	10
Niobium-95 (Nb-95)	10
Niobium-97 (Nb-97)	10
Osmium-185 (So-185)	10
Osmium-191m (So-191m)	100
Osmium-191 (So-191)	100
Osmium-193 (So-193)	100
Palladium-103 (Pd-103)	100
Palladium-109 (Pd-109)	100
Phosphorus-32 (P-32)	10
Platinum-191 (Pt-191)	100
Platinum-193m (Pt-193m)	100
Platinum-193 (Pt-193)	100
Platinum-197m (Pt-197m)	100
Platinum-197 (Pt-197)	100
Polonium-210 (Po-210)	0.1
Potassium-42 (K-42)	10
Potassium-43 (K-43)	10
Praseodymium-142 (Pr-142)	100
Praseodymium-143 (Pr-143)	100
Promethium-147 (Pm-147)	10
Promethium-149 (Pm-149)	10
Radium-226 (Ra-226)	0.1
Rhenium-186 (Re-186)	100
Rhenium-188 (Re-188)	100
Rhodium-103m (Rh-103m)	100
Rhodium-105 (Rh-105)	100
Rubidium-81 (Rb-81)	10
Rubidium-86 (Rb-86)	10
Rubidium-87 (Rb-87)	10
Ruthenium-97 (Ru-97)	100
Ruthenium-103 (Ru-103)	10
Ruthenium-105 (Ru-105)	10
Ruthenium-106 (Ru-106)	1
Samarium-151 (Sm-151)	10
Samarium-153 (Sm-153)	100
Scandium-46 (Sc-46)	10
Scandium-47 (Sc-47)	100
Scandium-48 (Sc-48)	10
Selenium-75 (Se-75)	10
Silicon-31 (Is-31)	100
Silver-105 (Ag-105)	10
Silver-110m (Ag-110m)	1
Silver-111 (Ag-111)	100
Sodium-22 (Na-22)	10
Sodium-24 (Na-24)	10
Strontium-85 (Sr-85)	10
Strontium-89 (Sr-89)	1
Strontium-90 (Sr-90)	0.1
Strontium-91 (Sr-91)	10
Strontium-92 (Sr-92)	10
Sulphur-35 (S-35)	100
Tantalum-182 (Ta-182)	10
Technetium-96 (Tc-96)	10
Technetium-97m (Tc-97m)	100
Technetium-97 (Tc-97)	100
Technetium-99m (Tc-99m)	100
Technetium-99 (Tc-99)	10
Tellurium-125m (Te-125m)	10
Tellurium-127m (Te-127m)	10
Tellurium-127 (Te-127)	100
Tellurium-129m (Te-129m)	10
Tellurium-129 (Te-129)	100
Tellurium-131m (Te-131m)	10
Tellurium-132 (Te-132)	10
Terbium-160 (Tb-160)	10
Thallium-200 (Tl-200)	100
Thallium-201 (Tl-201)	100
Thallium-202 (Tl-202)	100
Thallium-204 (Tl-204)	10
Thulium-170 (Tm-170)	10
Thulium-171 (Tm-171)	10
Tin-113 (Sn-113)	10
Tin-125 (Sn-125)	10
Tungsten-181 (W-181)	10
Tungsten-185 (W-185)	10
Tungsten-187 (W-187)	100
Vanadium-48 (V-48)	10
Xenon-131m (Xe-131m)	1,000
Xenon-133 (Xe-133)	100
Xenon-135 (Xe-135)	100
Ytterbium-169 (Yb-169)	10
Ytterbium-175 (Yb-175)	100
Yttrium-87 (Y-87)	10
Yttrium-90 (Y-90)	10
Yttrium-91 (Y-91)	10
Yttrium-92 (Y-92)	100
Yttrium-93 (Y-93)	100
Zinc-65 (Zn-65)	10
Zinc-69m (Zn-69m)	100
Zinc-69 (Zn-69)	1,000
Zirconium-93 (Zr-93)	10
Zirconium-95 (Zr-95)	10
Zirconium-97 (Zr-97)	10
Any radioactive material not listed above other than alpha emitting radioactive material	0.1

[Statutory Authority: RCW 70.98.050. 01-02-068, § 246-232-120, filed 12/29/00, effective 1/29/01. Statutory Authority: RCW 70.98.050 and 70.98.080. 91-15-112 (Order 184), § 246-232-120, filed 7/24/91, effective 8/24/91. Statutory Authority: RCW 43.70.040. 91-02-049 (Order 121), recodified as § 246-232-120, filed 12/27/90, effective 1/31/91. Statutory Authority: RCW 70.98.080. 83-19-050 (Order 2026), § 402-19-550, filed 9/16/83; 79-12-073 (Order 1459), § 402-19-550, filed 11/30/79, effective 1/1/80. Formerly WAC 402-20-240.]

WAC 246-232-130 Schedule C, exempt concentrations. (See WAC 246-232-010(1).)

Element (atomic number)	Isotope	Column I Gas concentration µCi/ml[1]	Column II Liquid and solid concentration µCi/ml[2]
Antimony (51)	Sb-122		$3x10^{-4}$
	Sb-124		$2x10^{-4}$
	Sb-125		$1x10^{-3}$

Element (atomic number)	Isotope	Column I Gas concentration µCi/ml[1]	Column II Liquid and solid concentration µCi/ml[2]
Argon (18)	Ar-37	$1x10^{-3}$	
	Ar-41	$4x10^{-7}$	
Arsenic (33)	As-73		$5x10^{-3}$
	As-74		$5x10^{-4}$
	As-76		$2x10^{-4}$
	As-77		$8x10^{-4}$
Barium (56)	Ba-131		$2x10^{-3}$
	Ba-140		$3x10^{-4}$
Beryllium (4)	Be-7		$2x10^{-2}$
Bismuth (83)	Bi-206		$4x10^{-4}$
Bromine (35)	Br-82	$4x10^{-7}$	$3x10^{-3}$
Cadmium (48)	Cd-109		$2x10^{-3}$
	Cd-115m		$3x10^{-4}$
	Cd-115		$3x10^{-4}$
Calcium (20)	Ca-45		$9x10^{-5}$
	Ca-47		$5x10^{-4}$
Carbon (6)	C-14	$1x10^{-6}$	$8x10^{-3}$
Cerium (58)	Ce-141		$9x10^{-4}$
	Ce-143		$4x10^{-4}$
	Ce-144		$1x10^{-4}$
Cesium (55)	Cs-131		$2x10^{-2}$
	Cs-134m		$6x10^{-2}$
	Cs-134		$9x10^{-5}$
Chlorine (17)	Cl-38	$9x10^{-7}$	$4x10^{-3}$
Chromium (24)	Cr-51		$2x10^{-2}$
Cobalt (27)	Co-57		$5x10^{-3}$
	Co-58		$1x10^{-3}$
	Co-60		$5x10^{-4}$
Copper (29)	Cu-64		$3x10^{-3}$
Dysprosium (66)	Dy-165		$4x10^{-3}$
	Dy-166		$4x10^{-4}$
Erbium (68)	Er-169		$9x10^{-4}$
	Er-171		$1x10^{-3}$
Europium (63)	Eu-152 (9.2 h)		$6x10^{-4}$
	Eu-155		$2x10^{-3}$
Fluorine (9)	F-18	$2x10^{-6}$	$8x10^{-3}$
Gadolinium (64)	Gd-153		$2x10^{-3}$
	Gd-159		$8x10^{-4}$
Gallium (31)	Ga-72		$4x10^{-4}$
Germanium (32)	Ge-71		$2x10^{-2}$
Gold (79)	Au-196		$2x10^{-3}$
	Au-198		$5x10^{-4}$
	Au-199		$2x10^{-3}$
Hafnium (72)	Hf-181		$7x10^{-4}$
Hydrogen (1)	H-3	$5x10^{-6}$	$3x10^{-2}$
Indium (49)	In-113m		$1x10^{-2}$
	In-114m		$2x10^{-4}$
Iodine (53)	I-125	$3x10^{-9}$	$2x10^{-5}$
	I-126	$3x10^{-9}$	$2x10^{-5}$
	I-131	$3x10^{-9}$	$2x10^{-5}$
	I-132	$8x10^{-8}$	$6x10^{-4}$
	I-133	$1x10^{-8}$	$7x10^{-5}$
	I-134	$2x10^{-7}$	$1x10^{-3}$
Iridium (77)	Ir-190		$2x10^{-3}$
	Ir-192		$4x10^{-4}$
	Ir-194		$3x10^{-4}$
Iron (26)	Fe-55		$8x10^{-3}$
	Fe-59		$6x10^{-4}$
Krypton (36)	Kr-85m	$1x10^{-6}$	
	Kr-85		$3x10^{-6}$
Lanthanum (57)	La-140		$2x10^{-4}$
Lead (82)	Pb-203		$4x10^{-3}$
Lutetium (71)	Lu-177		$1x10^{-3}$

Element (atomic number)	Isotope	Column I Gas concentration µCi/ml[1]	Column II Liquid and solid concentration µCi/ml[2]
Manganese (25)	Mn-52		$3x10^{-4}$
	Mn-54		$1x10^{-3}$
	Mn-56		$1x10^{-3}$
Mercury (80)	Hg-197m		$2x10^{-3}$
	Hg-197		$3x10^{-3}$
	Hg-203		$2x10^{-4}$
Molybdenum (42)	Mo-99		$2x10^{-3}$
Neodymium (60)	And-147		$6x10^{-4}$
	And-149		$3x10^{-3}$
Nickel (28)	Ni-65		$1x10^{-3}$
Niobium (Columbium)(41)	Nb-95		$1x10^{-3}$
	Nb-97		$9x10^{-3}$
Osmium (76)	So-185		$7x10^{-4}$
	So-191m		$3x10^{-2}$
	So-191		$2x10^{-3}$
	So-193		$6x10^{-4}$
Palladium (46)	Pd-103		$3x10^{-3}$
	Pd-109		$9x10^{-4}$
Phosphorus (15)	P-32		$2x10^{-4}$
Platinum (78)	Pt-191		$1x10^{-3}$
	Pt-193m		$1x10^{-2}$
	Pt-197m		$1x10^{-2}$
	Pt-197		$1x10^{-3}$
Potassium (19)	K-42		$3x10^{-3}$
Praseodymium (59)	Pr-142		$3x10^{-4}$
	Pr-143		$5x10^{-4}$
Promethium (61)	Pm-147		$2x10^{-3}$
	Pm-149		$4x10^{-4}$
Radium (88)	Ra-226		$1x10^{-7}$
	Ra-228		$3x10^{-7}$
Rhenium (75)	Re-183		$6x10^{-3}$
	Re-186		$9x10^{-4}$
	Re-188		$6x10^{-4}$
Rhodium (45)	Rh-103m		$1x10^{-1}$
	Rh-105		$1x10^{-3}$
Rubidium	Rb-86		$7x10^{-4}$
Ruthenium (44)	Ru-97		$4x10^{-3}$
	Ru-103		$8x10^{-4}$
	Ru-105		$1x10^{-3}$
	Ru-106		$1x10^{-4}$
Samarium (62)	Sm-153		$8x10^{-4}$
Scandium (21)	Sc-46		$4x10^{-4}$
	Sc-47		$9x10^{-4}$
	Sc-48		$3x10^{-4}$
Selenium (34)	Se-75		$3x10^{-3}$
Silicon (14)	Is-31		$9x10^{-3}$
Silver (47)	Ag-105		$1x10^{-3}$
	Ag-110m		$3x10^{-4}$
	Ag-111		$4x10^{-4}$
Sodium (11)	Na-24		$2x10^{-3}$
Strontium (38)	Sr-85		$1x10^{-3}$
	Sr-89		$1x10^{-4}$
	Sr-91		$7x10^{-4}$
	Sr-92		$7x10^{-4}$
Sulfur (16)	S-35	$9x10^{-8}$	$6x10^{-4}$
Tantalum (73)	Ta-182		$4x10^{-4}$
Technetium (43)	Tc-96m		$1x10^{-1}$
	Tc-96		$1x10^{-3}$

Element (atomic number)	Isotope	Column I Gas concentration µCi/ml[1]	Column II Liquid and solid concentration µCi/ml[2]
Tellurium (52)	Te-125m		$2x10^{-3}$
	Te-127m		$6x10^{-4}$
	Te-127		$3x10^{-3}$
	Te-129m		$3x10^{-4}$
	Te-131m		$6x10^{-4}$
	Te-132		$3x10^{-4}$
Terbium (65)	Tb-160		$4x10^{-4}$
Thallium (81)	Tl-200		$4x10^{-3}$
	Tl-201		$3x10^{-3}$
	Tl-202		$1x10^{-3}$
	Tl-204		$1x10^{-3}$
Thulium (69)	Tm-170		$5x10^{-4}$
	Tm-171		$5x10^{-3}$
Tin (50)	Sn-113		$9x10^{-4}$
	Sn-125		$2x10^{-4}$
Tungsten	W-181		$4x10^{-3}$
(Wolfram) (74)	W-187		$7x10^{-4}$
Vanadium (23)	V-48		$3x10^{-4}$
Xenon (54)	Xe-131m	$4x10^{-6}$	
	Xe-133	$3x10^{-6}$	
	Xe-135	$1x10^{-6}$	
Ytterbium (70)	Yb-175		$1x10^{-3}$
Yttrium (39)	Y-90		$2x10^{-4}$
	Y-91m		$3x10^{-2}$
	Y-91		$3x10^{-4}$
	Y-92		$6x10^{-4}$
	Y-93		$3x10^{-4}$
Zinc (30)	Zn-65		$1x10^{-3}$
	Zn-69m		$7x10^{-4}$
	Zn-69		$2x10^{-2}$
Zirconium (40)	Zr-95		$6x10^{-4}$
	Zr-97		$2x10^{-4}$
Beta and/or gamma emitting radioactive material not listed above with half-life less than 3 years		$1x10^{-10}$	$1x10^{-6}$

Notes: [1]Values are given in Column I only for those materials normally used as gases

[2]µCi/gm for solids

Note 1: Many radioisotopes disintegrate into isotopes which are also radioactive. In expressing the concentrations in Schedule C the activity stated is that of the parent isotope and takes into account the daughters.

Note 2: For purposes of WAC 246-232-010(1) where there is involved a combination of isotopes, the limit for the combination should be derived as follows: Determine for each isotope in the product the ratio between the concentration present in the product and the exempt concentration established in Schedule C for the specific isotope when not in combination. The sum of such ratios may not exceed "1" (i.e., unity).

Example:

$$\frac{\text{Concentration of Isotope A in Product}}{\text{Exempt concentration of Isotope A}} + \frac{\text{Concentration of Isotope B in Product}}{\text{Exempt concentration of Isotope B}} \leq 1$$

Note 3: For the purpose of determining concentration in a product or device, the total quantity of radioactive material present is divided by only that weight or volume of the discrete part or component throughout which the radioactive material is relatively uniformly distributed. If the weight or volume of this part or component cannot be determined then the product or device should be evaluated on the basis of the total quantity of radioactive material present.

[Statutory Authority: RCW 70.98.050. 01-02-068, § 246-232-130, filed 12/29/00, effective 1/29/01. Statutory Authority: RCW 70.98.050 and 70.98.080. 91-15-112 (Order 184), § 246-232-130, filed 7/24/91, effective 8/24/91. Statutory Authority: RCW 43.70.040. 91-02-049 (Order 121), recodified as § 246-232-130, filed 12/27/90, effective 1/31/91. Statutory Authority: RCW 70.98.080. 87-01-031 (Order 2450), § 402-19-580, filed 12/11/86; 83-19-050 (Order 2026), § 402-19-580, filed 9/16/83; 79-12-073 (Order 1459), § 402-19-580, filed 11/30/79, effective 1/1/80. Formerly WAC 402-20-250.]

WAC 246-232-140 Schedule D.

ACCEPTABLE SURFACE CONTAMINATION LEVELS

NUCLIDES A	AVERAGE B C F	MAXIMUM B D F	REMOVABLE B E F WIPE LIMITS
U-nat, U-235, U-238, and associated decay products	5,000 dpm α/100 cm2	15,000 dpm α/100 cm2	1,000 dpm α/100 cm2
Transuranics, Ra-226, Ra-228, Th-230, Th-228, Pa-231, Ac-227, I-125, I-129	100 dpm/100 cm2	300 dpm/100 cm2	20 dpm/100 cm2
Th-nat, Th-232, Sr-90, Ra-223, Ra-224, U-232, I-126, I-131, I-133	1000 dpm/100 cm2	3000 dpm/100 cm2	200 dpm/100 cm2
Beta-gamma emitters (nuclides with decay modes other than alpha emission or spontaneous fission) except SR-90 and others noted above	5000 dpm βγ/100 cm2	15,000 dpm βγ/100 cm2	1000 dpm βγ/100 cm2

A Where surface contamination by both alpha- and beta-gamma-emitting nuclides exists, the limits established for alpha- and beta-gamma-emitting nuclides should apply independently.

B As used in this table, dpm (disintegrations per minute) means the rate of emission by radioactive material as determined by correcting the counts per minute observed by an appropriate detector for background, efficiency, and geometric factors associated with the instrumentation.

C Measurements of average contaminant should not be averaged over more than 1 square meter. For objects of less surface area, the average should be derived for each such object.

D The maximum contamination level applies to an area of not more than 100 cm^2.

E The amount of removable radioactive material per 100 cm^2 of surface area should be determined by wiping that area with dry filter or soft absorbent paper, applying moderate pressure, and assessing the amount of radioactive material on the wipe with an appropriate instrument of known efficiency. When removable contamination on objects of less surface area is determined, the pertinent levels should be reduced proportionally and the entire surface should be wiped.

F The average and maximum radiation levels associated with surface contamination resulting from beta-gamma emitters should not exceed 0.2 mrad/hr at 1 cm and 1.0 mrad/hr at 1 cm, respectively, measured through not more than 7 milligrams per square centimeter of total absorber.

[Statutory Authority: RCW 43.70.040. 91-02-049 (Order 121), recodified as § 246-232-140, filed 12/27/90, effective 1/31/91. Statutory Authority: RCW 70.98.080. 87-01-031 (Order 2450), § 402-19-590, filed 12/11/86; 83-19-050 (Order 2026), § 402-19-590, filed 9/16/83.]

WAC 246-232-990 Fees. Fees are required from all applicants, licensees, or registrants. Chapter 246-254 WAC speciWAC fies fees for users of radiation subject to regulation under chapters 246-220 through 246-255 WAC.

[Statutory Authority: RCW 70.98.050 and 70.98.080. 91-15-112 (Order 184), § 246-232-990, filed 7/24/91, effective 8/24/91. Statutory Authority: RCW 43.70.040. 91-02-049 (Order 121), recodified as § 246-232-990, filed 12/27/90, effective 1/31/91. Statutory Authority: RCW 70.98.080. 83-19-050 (Order 2026), § 402-19-370, filed 9/16/83; 79-12-073 (Order 1459), § 402-19-370, filed 11/30/79, effective 1/1/80.]

Chapter 246-233 WAC

RADIOACTIVE MATERIALS—GENERAL LICENSES

WAC

246-233-001	Purpose and scope.
246-233-005	Ownership of radioactive material.
246-233-010	General licenses—Source material.
246-233-015	Certain devices and equipment.
246-233-020	General license—Certain measuring, gauging or controlling devices.
246-233-025	General license—Luminous safety devices for aircraft.
246-233-030	General license—Ice detection devices.
246-233-035	General license—Calibration and reference sources.
246-233-040	General license for use of radioactive material for certain *in vitro* clinical or laboratory testing.

WAC 246-233-001 Purpose and scope. This chapter establishes general licenses for the possession and use of radioactive material contained in certain items and a general license for ownership of radioactive material. Chapter 246-232 WAC also contains provisions applicable to the general licenses established in this part.

[Statutory Authority: RCW 70.98.050. 04-04-055, § 246-233-001, filed 1/30/04, effective 3/1/04. Statutory Authority: RCW 70.98.050 and 70.98.-080. 91-15-112 (Order 184), § 246-233-001, filed 7/24/91, effective 8/24/91. Statutory Authority: RCW 43.70.040. 91-02-049 (Order 121), recodified as § 246-233-001, filed 12/27/90, effective 1/31/91. Statutory Authority: RCW 70.98.080. 79-12-073 (Order 1459), § 402-21-010, filed 11/30/79, effective 1/1/80. Formerly chapter 402-20 WAC.]

WAC 246-233-005 Ownership of radioactive material. A general license is hereby issued to own radioactive material without regard to quantity. Notwithstanding any other provisions of this chapter, this general license does not authorize the manufacture, production, transfer, receipt, possession or use of radioactive material.

[Statutory Authority: RCW 70.98.050. 04-04-055, § 246-233-005, filed 1/30/04, effective 3/1/04.]

WAC 246-233-010 General licenses—Source material. (1) A general license is hereby issued authorizing use, possession, and transfer of not more than fifteen pounds of source material at any one time by persons in the following categories:

(a) Pharmacists using the source material solely for the preparation of medicinal compounds;

(b) Physicians using the source material for medicinal purposes;

(c) Persons receiving possession of source material from pharmacists and physicians in the form of medicinals or drugs;

(d) Commercial and industrial firms, and research, educational, and medical institutions, and state and local government agencies for research, development, educational, operational, or commercial purposes: And provided, That no such person shall, pursuant to this general license, receive more than a total of one hundred fifty pounds of source material in any one calendar year.

(2) Persons who receive, possess, use, or transfer source material pursuant to the general license issued in subsection (1) of this section are exempt from the provisions of chapters 246-221 and 246-222 WAC to the extent that such receipt, possession, use, or transfer is within the terms of such general license: Provided, however, That this exemption shall not be deemed to apply to any such person who is also in possession of source material under a specific license issued pursuant to chapter 246-235 WAC.

(3) A general license is hereby issued authorizing the receipt of title to source material without regard to quantity. This general license does not authorize any person to receive, possess, use, or transfer source material.

(4) Depleted uranium in industrial products and devices.

(a) A general license is hereby issued to receive, acquire, possess, use, or transfer, in accordance with the provisions of paragraphs (4)(b), (c), (d), and (e) of this section, depleted uranium contained in industrial products or devices for the purpose of providing a concentrated mass in a small volume of the product or device.

(b) The general license in paragraph (4)(a) of this section applies only to industrial products or devices which have been manufactured either in accordance with a specific license issued to the manufacturer of the products or devices pursuant to WAC 246-235-091 or in accordance with a specific license issued to the manufacturer by the United States Nuclear Regulatory Commission or an agreement state which authorizes manufacture of the products or devices for distribution to persons generally licensed by the United States Nuclear Regulatory Commission or an agreement state.

(c)(i) Persons who receive, acquire, possess, or use depleted uranium pursuant to the general license established by paragraph (4)(a) of this section shall file department form RHF-20 "Registration certificate - Use of depleted uranium under general license," with the department. The form shall

be submitted within thirty days after the first receipt or acquisition of such depleted uranium. The registrant shall furnish on department form RHF-20 the following information and such other information as may be required by that form:

(A) Name and address of the registrant;

(B) A statement that the registrant has developed and will maintain procedures designed to establish physical control over the depleted uranium described in paragraph (4)(a) of this section and designed to prevent transfer of such depleted uranium in any form, including metal scrap, to persons not authorized to receive the depleted uranium; and

(C) Name and/or title, address, and telephone number of the individual duly authorized to act for and on behalf of the registrant in supervising the procedures identified in item (4)(c)(i)(B) of this section.

(ii) The registrant possessing or using depleted uranium under the general license established by paragraph (4)(a) of this section shall report in writing to the department any changes in information previously furnished on the "Registration certificate - Use of depleted uranium under general license." The report shall be submitted within thirty days after the effective date of such change.

(d) A person who receives, acquires, possesses, or uses depleted uranium pursuant to the general license established by paragraph (4)(a) of this section:

(i) Shall not introduce such depleted uranium, in any form, into a chemical, physical, or metallurgical treatment or process, except a treatment or process for repair or restoration of any plating or other covering of the depleted uranium.

(ii) Shall not abandon such depleted uranium.

(iii) Shall transfer or dispose of such depleted uranium only by transfer in accordance with the provision of chapter 246-232 WAC. In the case where the transferee receives the depleted uranium pursuant to the general license established by paragraph (4)(a) of this section the transferor shall furnish the transferee a copy of this regulation and a copy of department form RHF-20.

In the case where the transferee receives the depleted uranium pursuant to a general license contained in the United States Nuclear Regulatory Commission's or agreement state's regulation equivalent to paragraph (4)(a) of this section the transferor shall furnish the transferee a copy of this regulation and a copy of department form RHF-20 accompanied by a note explaining that use of the product or device is regulated by the United States Nuclear Regulatory Commission or agreement state under requirements substantially the same as those in this regulation.

(iv) Shall maintain and make available to the department upon request the name and address of the person receiving the depleted uranium pursuant to such transfer.

(v) Shall not export such depleted uranium except in accordance with a license issued by the United States Nuclear Regulatory Commission pursuant to 10 CFR Part 110.

(e) Any person receiving, acquiring, possessing, using, or transferring depleted uranium pursuant to the general license established by paragraph (4)(a) of this section is exempt from the requirements of chapters 246-221 and 246-222 WAC of these regulations with respect to the depleted uranium covered by that general license.

[Statutory Authority: RCW 70.98.050. 98-13-037, § 246-233-010, filed 6/8/98, effective 7/9/98. Statutory Authority: RCW 70.98.050 and 70.98.-080. 91-15-112 (Order 184), § 246-233-010, filed 7/24/91, effective 8/24/91. Statutory Authority: RCW 43.70.040. 91-02-049 (Order 121), recodified as § 246-233-010, filed 12/27/90, effective 1/31/91. Statutory Authority: RCW 70.98.050. 81-01-011 (Order 1570), § 402-21-030, filed 12/8/80. Statutory Authority: RCW 70.98.080. 79-12-073 (Order 1459), § 402-21-030, filed 11/30/79, effective 1/1/80. Formerly WAC 402-20-030.]

WAC 246-233-015 Certain devices and equipment. A general license is hereby issued to transfer, receive, acquire, own, possess, and use radioactive material incorporated in the following devices or equipment which have been manufactured, tested and labeled by the manufacturer in accordance with a specific license issued to the manufacturer by the United States Nuclear Regulatory Commission for use pursuant to Section 31.3 of 10 CFR Part 31. This general license is subject to the provisions of WAC 246-220-020, 246-220-030, 246-220-040, 246-220-050, 246-220-060, 246-220-070, chapters 246-232, 246-221** and 246-222 WAC.

(1) *Static elimination device.* Devices designed for use as static eliminators which contain, as a sealed source or sources, radioactive material consisting of a total of not more than 500 microcuries of Polonium-210 per device.

(2) *Ion generating tube.* Devices designed for ionization of air which contain, as a sealed source or sources, radioactive material consisting of a total of not more than 500 microcuries of Polonium-210 per device or a total of not more than 50 millicuries of Hydrogen-3 (tritium) per device.

** Attention is directed particularly to the provisions of chapter 246-221 WAC which relate to the labeling of containers.

[Statutory Authority: RCW 70.98.050. 04-04-055, § 246-233-015, filed 1/30/04, effective 3/1/04.]

WAC 246-233-020 General license—Certain measuring, gauging or controlling devices. (1) A general license is hereby issued to commercial and industrial firms and research, educational and medical institutions, individuals in the conduct of their business, and state or local government agencies to own, acquire, receive, possess, use or transfer, in accordance with the provisions of subsections (2), (3), and (4) of this section, radioactive material excluding special nuclear material contained in devices designed and manufactured for the purpose of detecting, measuring, gauging or controlling thickness, density, level, interface location, radiation, leakage, or qualitative or quantitative chemical composition, or for producing light or an ionized atmosphere.

(2) The general license in subsection (1) of this section applies only to radioactive material contained in devices which have been manufactured or initially transferred and labeled in accordance with the specifications contained in a specific license issued by the department pursuant to WAC 246-235-093 or in accordance with the Nuclear Regulatory Commission, an agreement state or a licensing state, which authorizes distribution or transfer of devices to persons generally licensed by the United States Nuclear Regulatory Commission, an agreement state or licensing state**. The devices shall have been received from one of the specific licensees described in this subsection or through a transfer made under subsection (3)(h) of this section.

**Note: Regulations under the Federal Food, Drug, and Cosmetic Act authorizing the use of radioactive control devices in food production require certain additional labeling thereon which is found in Section 179.21 of 21 CFR Part 179.

(3) Any person who owns, acquires, receives, possesses, uses or transfers radioactive material in a device pursuant to the general license in subsection (1) of this section:

(a) Shall assure that all labels affixed to the device at the time of receipt and bearing a statement that removal of the label is prohibited are maintained thereon and shall comply with all instructions and precautions provided by such labels;

(b) Shall assure that the device is tested for leakage of radioactive material and proper operation of the on-off mechanism and indicator, if any, at no longer than six-month intervals or at such other intervals as are specified in the label, however:

(i) Devices containing only krypton need not be tested for leakage of radioactive material; and

(ii) Devices containing only tritium or not more than 100 microcuries of other beta and/or gamma emitting material or 10 microcuries of alpha emitting material need not be tested for any purpose. Devices held in storage in the original shipping container prior to initial installation need not be tested until immediately prior to use;

(c) Shall assure that the tests required by (b) of this subsection and other testing, installing, servicing, and removing from installation involving the radioactive materials, its shielding or containment, are performed:

(i) In accordance with the instructions provided by the labels; or

(ii) By a person holding a specific license from the department or from the United States Nuclear Regulatory Commission or from any agreement state or from a licensing state to perform such activities;

(d) Shall maintain records showing compliance with the requirements of (b) and (c) of this subsection. The records shall show the results of tests. The records also shall show the dates of performance and the names of persons performing, testing, installing, servicing, and removing from installation concerning the radioactive material, its shielding or containment. Records of tests for leakage of radioactive material required by (b) of this subsection shall be maintained for three years after the next required leak test is performed or the sealed source is transferred or disposed. Records of tests of the on/off mechanism and indicator required by (b) of this subsection shall be maintained for three years after the next required test of the on/off mechanism and indicator is performed or the sealed source is transferred or disposed. Records of other testing, installation, servicing, and removal from installation required by (c) of this subsection shall be maintained for a period of three years from the date of the recorded event or until the device is transferred or disposed;

(e) Upon the occurrence of a failure of or damage to, or any indication of a possible failure of or damage to, the shielding of the radioactive material or the on/off mechanism or indicator, or upon the detection of 0.005 microcuries or more removable radioactive material, shall immediately suspend operation of the device until it has been repaired by the manufacturer or other person holding a specific license from the department, the United States Nuclear Regulatory Commission, or from an agreement state or a licensing state to repair such devices, or disposed by transfer to a person authorized by a specific license to receive the radioactive material contained in the device and, within thirty days, furnish to the department a written report containing a brief description of the event and the remedial action taken; and, in the case of detection of 0.005 microcuries or more of removable radioactive material or failure of or damage to a source likely to result in contamination of the premises or the environs, a plan for ensuring that the premises and environs are acceptable for unrestricted use (see WAC 246-246-020);

(f) Shall not abandon the device containing radioactive material;

(g) Except as provided in (h) of this subsection, shall transfer or dispose the device containing radioactive material only by transfer to a person holding a specific license of the department, the United States Nuclear Regulatory Commission, or an agreement state, or a licensing state whose specific license authorizes the person to receive the device and within thirty days after transfer of a device to a specific licensee shall furnish to the department a report containing identification of the device by manufacturer's (or initial transferor's) name, model number, and serial number; the name, address, and license number of the person receiving the device, and the date of transfer. Prior written approval from the department is required before transferring the device to any other specific licensee not specifically identified in this subsection;

(h) Shall transfer the device to another general licensee only:

(i) Where the device remains in use at a particular location. In such case, the transferor shall give the transferee a copy of this section, a copy of WAC 246-221-240, 246-221-250, 246-232-050, and 246-232-060, and any safety documents identified in the label of the device and within thirty days of the transfer, report to the department the manufacturer's (or transferor's) name, model number, and serial number of device transferred, the transferee's name and mailing address for the location of use, and the name, title, and phone number of the responsible individual identified by the transferee in accordance with (j) of this subsection to have knowledge of and authority to take actions to ensure compliance with the appropriate regulations and requirements; or

(ii) Where the device is held in storage in the original shipping container at its intended location of use prior to initial use by a general licensee;

(i) Shall comply with the provisions of WAC 246-221-240 and 246-221-250 for reporting radiation incidents, theft or loss of licensed material, but shall be exempt from the other requirements of chapters 246-221 and 246-222 WAC;

(j) Shall appoint an individual responsible for having knowledge of the appropriate regulations and requirements and the authority for taking required actions to comply with appropriate regulations and requirements. The general licensee, through this individual, shall ensure the day-to-day compliance with appropriate regulations and requirements. This appointment does not relieve the general licensee of any of its responsibility in this regard;

(k)(i) Shall register, in accordance with (k)(i) and (iii) of this subsection, devices containing at least 370 MBq (10 mCi) of Cesium-137, 3.7 MBq (0.1 mCi) of Strontium-90, 37 MBq (1 mCi) of Cobalt-60, or 37 MBq (1 mCi) of Americium-241 or any other transuranic (i.e., element with atomic number greater than uranium (92)), based on the activity indicated on the label. Each address for a location of use, as described under (k)(iii)(D) of this subsection, represents a

separate general licensee and requires a separate registration and fee;

(ii) If in possession of a device meeting the criteria of (k)(i) of this subsection, shall register these devices annually with the department and shall pay the fee required by WAC 246-254-090. Registration must be done by verifying, correcting, and/or adding to the information provided in a request for registration received from the department. The registration information must be submitted to the department within thirty days of the date of the request for registration or as otherwise indicated in the request. In addition, a general licensee holding devices meeting the criteria of (k)(i) of this subsection is subject to the bankruptcy notification requirement in WAC 246-232-050;

(iii) In registering devices, the general licensee shall furnish the following information and any other information specifically requested by the department:

(A) Name and mailing address of the general licensee;

(B) Information about each device: The manufacturer (or initial transferor), model number, serial number, the radionuclide and activity (as indicated on the label);

(C) Name, title, and telephone number of the responsible person designated as a representative of the general licensee under (j) of this subsection;

(D) Address or location at which the device(s) are used and/or stored. For portable devices, the address of the primary place of storage;

(E) Certification by the responsible representative of the general licensee that the information concerning the device(s) has been verified through a physical inventory and checking of label information;

(F) Certification by the responsible representative of the general licensee that they are aware of the requirements of the general license;

(iv) Persons generally licensed by the U.S. Nuclear Regulatory Commission, or an agreement state with respect to devices meeting the criteria in (k)(i) of this subsection are not subject to registration requirements if the devices are used in areas subject to Washington state jurisdiction for a period less than one hundred eighty days in any calendar year. The department will not request registration information from such licensees;

(l) Shall report changes to the mailing address for the location of use (including change in name of general licensee) to the department within thirty days of the effective date of the change. For a portable device, a report of address change is only required for a change in the device's primary place of storage;

(m) Shall not hold devices that are not in use for longer than two years. If devices with shutters are not being used, the shutter must be locked in the closed position. The testing required by (b) of this subsection need not be performed during the period of storage only. However, when devices are put back into service or transferred to another person, and have not been tested within the required test interval, they must be tested for leakage before use or transfer and the shutter tested before use. Devices kept in standby for future use are excluded from the two-year time limit if the general licensee performs quarterly physical inventories of these devices while they are in standby.

(4) The general license in subsection (1) of this section does not authorize the manufacture, import or export of devices containing radioactive material.

(5) The general license provided in this subsection is subject to the provisions of WAC 246-220-020, 246-220-030, 246-220-040, 246-220-060, 246-220-070, 246-220-100, 246-221-240, 246-221-250, 246-232-050, 246-232-060, 246-232-070, 246-232-080, and 246-232-090.

[Statutory Authority: RCW 70.98.050. 04-04-055, § 246-233-020, filed 1/30/04, effective 3/1/04; 98-13-037, § 246-233-020, filed 6/8/98, effective 7/9/98. Statutory Authority: RCW 70.98.050 and 70.98.080. 91-15-112 (Order 184), § 246-233-020, filed 7/24/91, effective 8/24/91. Statutory Authority: RCW 43.70.040. 91-02-049 (Order 121), recodified as § 246-233-020, filed 12/27/90, effective 1/31/91. Statutory Authority: RCW 70.98.080. 87-01-031 (Order 2450), § 402-21-050, filed 12/11/86; 83-19-050 (Order 2026), § 402-21-050, filed 9/16/83. Statutory Authority: RCW 70.98.050. 81-01-011 (Order 1570), § 402-21-050, filed 12/8/80. Statutory Authority: RCW 70.98.080. 79-12-073 (Order 1459), § 402-21-050, filed 11/30/79, effective 1/1/80. Formerly WAC 402-20-040.]

WAC 246-233-025 General license—Luminous safety devices for aircraft. (1) A general license is hereby issued to own, receive, acquire, possess and use tritium or Promethium-147 contained in luminous safety devices for use in aircraft, provided:

(a) Each device contains not more than 10 curies of tritium or 300 millicuries of Promethium-147; and

(b) Each device has been manufactured, assembled or imported in accordance with a specific license issued by the United States Nuclear Regulatory Commission, or each device has been manufactured or assembled in accordance with the specifications contained in a specific license issued by the department or any agreement state to the manufacturer or assembler of such device pursuant to licensing requirements equivalent to those in Section 32.53 of 10 CFR Part 32 of the regulations of the United States Nuclear Regulatory Commission.

(2) Persons who own, receive, acquire, possess or use luminous safety devices pursuant to the general license in this subsection are exempt from the requirements of chapters 246-221 and 246-222 WAC except that they shall comply with the provisions of WAC 246-221-240 and 246-221-250.

(3) This general license does not authorize the manufacture, assembly, or repair of luminous safety devices containing tritium or Promethium-147.

(4) This general license does not authorize the ownership, receipt, acquisition, possession or use of Promethium-147 contained in instrument dials.

(5) This general license is subject to the provisions of WAC 246-220-020, 246-220-030, 246-220-040, 246-220-050, 246-220-060, 246-220-070, 246-220-100, 246-232-050, 246-232-070, 246-232-080, and 246-232-090.

[Statutory Authority: RCW 70.98.050. 04-04-055, § 246-233-025, filed 1/30/04, effective 3/1/04.]

WAC 246-233-030 General license—Ice detection devices. (1) A general license is hereby issued to own, receive, acquire, possess, use and transfer Strontium-90 contained in ice detection devices, provided each device contains not more than 50 microcuries of Strontium-90 and each device has been manufactured or imported in accordance with a specific license issued by the United States Nuclear

Regulatory Commission or each device has been manufactured in accordance with the specifications contained in a specific license issued by the department or any agreement state to the manufacturer of such device pursuant to licensing requirements equivalent to those in Section 32.61 of 10 CFR Part 32 of the regulations of the United States Nuclear Regulatory Commission.

(2) Persons who own, receive, acquire, possess, use or transfer Strontium-90 contained in ice detection devices pursuant to the general license in (a) of this subsection:

(a) Shall, upon occurrence of visually observable damage, such as a bend or crack or discoloration from overheating to the device, discontinue use of the device until it has been inspected, tested for leakage and repaired by a person holding a specific license from the United States Nuclear Regulatory Commission or an agreement state to manufacture or service such devices; or shall dispose of the device pursuant to the provisions of these regulations;

(b) Shall assure that all labels affixed to the device at the time of receipt, and which bear a statement which prohibits removal of the labels, are maintained thereon; and

(c) Are exempt from the requirements of chapters 246-221 and 246-222 WAC except that such persons shall comply with the provisions of WAC 246-221-170, 246-221-240, and 246-221-250.

(3) This general license does not authorize the manufacture, assembly, disassembly or repair of Strontium-90 sources in ice detection devices.

(4) This general license is subject to the provisions of WAC 246-220-020, 246-220-030, 246-220-040, 246-220-060, 246-220-070, 246-220-100, 246-232-050, 246-232-070, 246-232-080, and 246-232-090.

[Statutory Authority: RCW 70.98.050. 04-04-055, § 246-233-030, filed 1/30/04, effective 3/1/04.]

WAC 246-233-035 General license—Calibration and reference sources. (1) A general license is hereby issued to those persons listed below to own, receive, acquire, possess, use and transfer, in accordance with the provisions of subsections (4) and (5) of this section, Americium-241 in the form of calibration or reference sources:

(a) Any person who holds a specific license issued by the department which authorizes that person to receive, possess, use and transfer radioactive material; or

(b) Any person who holds a specific license issued by the United States Nuclear Regulatory Commission which authorizes that person to receive, possess, use and transfer special nuclear material.

(2) A general license is hereby issued to own, receive, possess, use and transfer plutonium in the form of calibration or reference sources in accordance with the provisions of subsections (4) and (5) of this section to any person who holds a specific license issued by the department which authorizes that person to receive, possess, use and transfer radioactive material.

(3) A general license is hereby issued to own, receive, possess, use and transfer Radium-226 in the form of calibration or reference sources in accordance with the provisions of subsections (4) and (5) of this section to any person who holds a specific license issued by the department which authorizes that person to receive, possess, use and transfer radioactive material.

(4) The general licenses in subsections (1), (2) and (3) of this section apply only to calibration or reference sources which have been manufactured in accordance with the specifications contained in a specific license issued to the manufacturer or importer of the sources by the United States Nuclear Regulatory Commission pursuant to Section 32.57 of 10 CFR Part 32 or Section 70.39 of 10 CFR Part 70 or which have been manufactured in accordance with the specifications contained in a specific license issued to the manufacturer by the department or any agreement state or licensing state pursuant to licensing requirements equivalent to those contained in Section 32.57 of 10 CFR Part 32 or Section 70.39 of 10 CFR Part 70 of the regulations of the United States Nuclear Regulatory Commission.

(5) The general licenses provided in subsections (1), (2) and (3) of this section are subject to the provisions of WAC 246-220-020, 246-220-030, 246-220-040, 246-220-060, 246-220-070, 246-220-100, 246-232-050, 246-232-070, 246-232-080, 246-232-090, chapters 246-221 and 246-222 WAC.

In addition, persons who own, receive, acquire, possess, use or transfer one or more calibration or reference sources pursuant to these general licenses:

(a) Shall not possess at any one time, at any one location of storage or use, more than 5 microcuries of Americium-241 and 5 microcuries of plutonium and 5 microcuries of Radium-226 in such sources;

(b) Shall not receive, possess, use or transfer such source unless the source, or the storage container, bears a label which includes one of the following statements or a substantially similar statement which contains the information called for in the following statement:

(i)

> The receipt, possession, use and transfer of this source, Model . . . . . , Serial No.. . . . . , are subject to a general license and the regulations of the United States Nuclear Regulatory Commission or of a state with which the commission has entered into an agreement for the exercise of regulatory authority. Do not remove this label.

CAUTION - RADIOACTIVE MATERIAL - THIS SOURCE CONTAINS (AMERICIUM-241). (PLUTONIUM)*. DO NOT TOUCH RADIOACTIVE PORTION OF THIS SOURCE

. . . . . .
Name of manufacturer or importer

*Note: Showing only the name of the appropriate material.

(ii)

> The receipt, possession, use and transfer of this source, Model . . . . . , Serial No. . . . . , are subject to a general license and the regulations of any licensing state. Do not remove this label.

CAUTION - RADIOACTIVE MATERIAL - THIS SOURCE CONTAINS RADIUM-226. DO NOT TOUCH RADIOACTIVE PORTION OF THIS SOURCE

. . . . . .
Name of manufacturer or importer

(c) Shall not transfer, abandon, or dispose of such source except by transfer to a person authorized by a license from the department, the United States Nuclear Regulatory Commission, or an agreement state or licensing state to receive the source;

(d) Shall store such source, except when the source is being used, in a closed container adequately designed and constructed to contain Americium-241, plutonium, or Radium-226/Radon-222 which might otherwise escape during storage; and

(e) Shall not use such source for any purpose other than the calibration of radiation detectors or the standardization of other sources.

(6) These general licenses do not authorize the manufacture of calibration or reference sources containing Americium-241, plutonium, or Radium-226.

[Statutory Authority: RCW 70.98.050. 04-04-055, § 246-233-035, filed 1/30/04, effective 3/1/04.]

WAC 246-233-040 General license for use of radioactive material for certain *in vitro* clinical or laboratory testing.* (1) A general license is hereby issued to any physician, veterinarian, clinical laboratory or hospital to receive, acquire, possess, transfer or use, for any of the following stated tests, in accordance with the provisions of subsections (2), (3), (4), (5), and (6) of this section the following radioactive materials in prepackaged units:

(a) Iodine-125, in units not exceeding 10 microcuries each for use in *in vitro* clinical or laboratory tests not involving internal or external administration of radioactive material, or the radiation therefrom, to human beings or animals.

(b) Iodine-131, in units not exceeding 10 microcuries each for use in *in vitro* clinical or laboratory tests not involving internal or external administration of radioactive material, or the radiation therefrom, to human beings or animals.

(c) Carbon-14, in units not exceeding 10 microcuries each for use in *in vitro* clinical or laboratory tests not involving internal or external administration of radioactive material, or the radiation therefrom, to human beings or animals.

(d) Hydrogen-3 (tritium), in units not exceeding 50 microcuries each for use in *in vitro* clinical or laboratory tests not involving internal or external administration of radioactive material, or the radiation therefrom, to human beings or animals.

(e) Iron-59, in units not exceeding 20 microcuries each for use in *in vitro* clinical or laboratory tests not involving internal or external administration of radioactive material, or the radiation therefrom, to human beings or animals.

(f) Cobalt-57, in units not exceeding 10 microcuries each for use in *in vitro* clinical or laboratory tests not involving internal or external administration of radioactive material, or the radiation therefrom, to human beings or animals.

(g) Selenium-75, in units not to exceed 10 microcuries each for use in *in vitro* clinical or laboratory tests not involving internal or external administration of radioactive material, or the radiation therefrom, to human beings or animals.

(h) Mock Iodine-125 reference or calibration sources, in units not exceeding 0.05 microcurie of Iodine-129 and 0.005 microcurie of Americium-241 each for use in *in vitro* clinical or laboratory tests not involving internal or external administration of radioactive material, or the radiation therefrom, to human beings or animals.

*Note: The new drug provisions of the Federal Food, Drug and Cosmetic Act also govern the availability and use of any specific diagnostic drugs in interstate commerce.

(2) No person shall receive, acquire, possess, use or transfer radioactive material pursuant to the general license established by subsection (1) of this section until that person has received a validated copy of department Form RHF-15 "Certificate - *in vitro* testing with radioactive material under general license." Annual validation requires resubmittal of revised department Form RHF-15 and submittal of the annual fee to the department. The physician, veterinarian, clinical laboratory or hospital shall furnish on department Form RHF-15 the following information and such other information as may be required by that form:

(a) Name and address of the physician, veterinarian, clinical laboratory or hospital;

(b) The location of use; and

(c) A statement that the physician, veterinarian, clinical laboratory or hospital has appropriate radiation measuring instruments to carry out *in vitro* clinical or laboratory tests with radioactive material as authorized under the general license in subsection (1) of this section and that such tests will be performed only by personnel competent in the use of such instruments and in the handling of the radioactive material.

(3) A person who receives, acquires, possesses or uses radioactive material pursuant to the general license established by subsection (1) of this section shall comply with the following:

(a) The general licensee shall not possess at any one time, pursuant to the general license in subsection (1) of this section at any one location of storage or use, a total amount of Iodine-125, Iodine-131, Selenium-75, Iron-59, and/or Cobalt-57 in excess of 200 microcuries.

(b) The general licensee shall store the radioactive material, until used, in the original shipping container or in a container providing equivalent radiation protection.

(c) The general licensee shall use the radioactive material only for the uses authorized by subsection (1) of this section.

(d) The general licensee shall not transfer the radioactive material to a person who is not authorized to receive it pursuant to a license issued by the department, the United States Nuclear Regulatory Commission, any agreement state or licensing state, nor transfer the radioactive material in any manner other than in the unopened, labeled shipping container as received from the supplier.

(e) The general licensee shall dispose of the Mock Iodine-125 reference or calibration sources described in subsection (1)(h) of this section as required by WAC 246-221-170.

(4) The general licensee shall not receive, acquire, possess, or use radioactive material pursuant to subsection (1) of this section:

(a) Except as prepackaged units which are labeled in accordance with the provision of an applicable specific license issued pursuant to WAC 246-235-097 or in accordance with the provisions of a specific license issued by the United States Nuclear Regulatory Commission, or any agree-

ment state or licensing state which authorizes the manufacture and distribution of Iodine-125, Iodine-131, Carbon-14, Hydrogen-3 (tritium), Iron-59, Selenium-75, Cobalt-57, or Mock Iodine-125 to persons generally licensed under this subsection or its equivalent; and

(b) Unless one of the following statements, as appropriate, or a substantially similar statement which contains the information called for in one of the following statements, appears on a label affixed to each prepackaged unit or appears in a leaflet or brochure which accompanies the package:

This radioactive material shall be received, acquired, possessed and used only by physicians, veterinarians, clinical laboratories or hospitals and only for *in vitro* clinical or laboratory tests not involving internal or external administration of the material, or the radiation therefrom, to human beings or animals. Its receipt, acquisition, possession, use and transfer are subject to the regulations and a general license of the United States Nuclear Regulatory Commission or of a state with which the commission has entered into an agreement for the exercise of regulatory authority.

. . . . . .
Name of manufacturer

This radioactive material shall be received, acquired, possessed and used only by physicians, veterinarians, clinical laboratories or hospitals and only for *in vitro* clinical or laboratory tests not involving internal or external administration of the material, or the radiation therefrom, to human beings or animals. Its receipt, acquisition, possession, use and transfer are subject to the regulations and a general license of a licensing state.

. . . . . .
Name of manufacturer

(5) The physician, veterinarian, clinical laboratory or hospital possessing or using radioactive material under the general license of subsection (1) of this section shall report in writing to the department, any changes in the information previously furnished in the "Certificate - *in vitro* testing with radioactive material under general license," department Form RHF-15. The report shall be furnished within thirty days after the effective date of such change.

(6) This general license is subject to the provisions of WAC 246-220-020, 246-220-030, 246-220-040, 246-220-060, 246-220-070, 246-220-090 and 246-220-100. In addition, any person using radioactive material pursuant to the general license of subsection (1) of this section is exempt from the requirements of chapters 246-221 and 246-222 WAC with respect to radioactive material covered by that general license, except that such persons using the Mock Iodine-125 described in subsection (1)(h) of this section shall comply with the provisions of WAC 246-221-170, 246-221-240, and 246-221-250 and of these regulations.

[Statutory Authority: RCW 70.98.050. 04-04-055, § 246-233-040, filed 1/30/04, effective 3/1/04.]

Chapter 246-235 WAC
RADIOACTIVE MATERIALS—SPECIFIC LICENSES

WAC

246-235-001	Purpose and scope.
246-235-010	Filing application for specific licenses.
246-235-020	General requirements for the issuance of specific licenses.
246-235-030	Issuance of specific licenses.
246-235-040	Expiration of licenses.
246-235-050	Renewal of license.
246-235-055	Precedence of license condition over regulation.
246-235-060	Amendment of licenses at request of licensee.
246-235-070	Agency action on applications to renew or amend.
246-235-075	Financial assurance and recordkeeping for decommissioning.
246-235-077	Special requirements for emergency planning.
246-235-080	Special requirements for possession and use of medical calibration and reference sources.
246-235-084	Special requirements for issuance of specific licenses for industrial radiography.
246-235-086	Special requirements for environmentally significant licensing actions.
246-235-090	Special requirements for specific licenses of broad scope.
246-235-091	Manufacture and distribution of industrial products containing depleted uranium under general license.
246-235-093	Manufacture, assembly or distribution of devices under general license.
246-235-095	Manufacture, assembly, or distribution of luminous safety devices, certain calibration sources or ice detectors under general license.
246-235-097	Manufacture and distribution of radioactive material for certain in vitro clinical or laboratory testing under general license.
246-235-100	Manufacture, preparation, or commercial transfer of radiopharmaceuticals for medical use.
246-235-102	Manufacture and distribution of sources or devices containing radioactive material for medical use.
246-235-105	Manufacture, assembly or distribution of radioactive material exempt from regulation.
246-235-110	Special requirements for issuance of specific licenses for source material milling.
246-235-130	Appendix—General laboratory rules for safe use of unsealed sources.
246-235-140	Schedule B, limits for broad licenses.
246-235-150	Schedule C—Quantities of radioactive materials requiring consideration of the need for an emergency plan for responding to a release.

DISPOSITION OF SECTIONS FORMERLY CODIFIED IN THIS CHAPTER

246-235-120	Schedule A groups of medical uses of radioactive material (ref. WAC 246-235-080(3) and 246-235-100(9)). [Statutory Authority: RCW 70.98.050. 98-13-037, § 246-235-120, filed 6/8/98, effective 7/9/98. Statutory Authority: RCW 70.98.050 and 70.98.080. 91-15-112 (Order 184), § 246-235-120, filed 7/24/91, effective 8/24/91. Statutory Authority: RCW 43.70.040. 91-02-049 (Order 121), recodified as § 246-235-120, filed 12/27/90, effective 1/31/91. Statutory Authority: RCW 70.98.080. 87-01-031 (Order 2450), § 402-22-200, filed 12/11/86. Statutory Authority: RCW 70.98.050. 81-01-011 (Order 1570), § 402-22-200, filed 12/8/80. Statutory Authority: RCW 70.98.080. 79-12-073 (Order 1459), § 402-22-200, filed 11/30/79, effective 1/1/80. Formerly WAC 402-20-260.] Repealed by 06-05-019, filed 2/6/06, effective 3/9/06. Statutory Authority: RCW 70.98.050.

WAC 246-235-001 Purpose and scope. (1) This chapter prescribes requirements for the issuance of specific licenses.

(2) The provisions and requirements of this chapter are in addition to, and not in substitution for, other requirements of these regulations. In particular the provisions of chapter 246-232 WAC apply to applications and licenses subject to this chapter.

[Statutory Authority: RCW 70.98.050 and 70.98.080. 91-15-112 (Order 184), § 246-235-001, filed 7/24/91, effective 8/24/91. Statutory Authority: RCW 43.70.040. 91-02-049 (Order 121), recodified as § 246-235-001, filed 12/27/90, effective 1/31/91. Statutory Authority: RCW 70.98.080. 79-12-073 (Order 1459), § 402-22-010, filed 11/30/79, effective 1/1/80. Formerly chapter 402-20 WAC.]

WAC 246-235-010 Filing application for specific licenses. (1) Applications for specific licenses shall be filed on department form RHF-1.

(2) The department may at any time after the filing of the original application, and before the expiration of the license, require further statements in order to enable the department to determine whether the application should be granted or denied or whether a license should be modified or revoked.

(3) Each application shall be signed by the applicant or licensee or a person duly authorized to act for and on the applicant's behalf.

(4) An application for a license may include a request for a license authorizing one or more activities.

(5) In the application, the applicant may incorporate by reference information contained in previous applications, statements, or reports filed with the department provided such references are clear and specific.

(6) Applications and documents submitted to the department may be made available for public inspection except that the department may withhold any document or part thereof from public inspection if disclosure of its content is not required in the public interest and would adversely affect the interest of a person concerned.

[Statutory Authority: RCW 43.70.040. 91-02-049 (Order 121), recodified as § 246-235-010, filed 12/27/90, effective 1/31/91. Statutory Authority: RCW 70.98.080. 79-12-073 (Order 1459), § 402-22-020, filed 11/30/79, effective 1/1/80. Formerly WAC 402-20-050.]

WAC 246-235-020 General requirements for the issuance of specific licenses. A license application will be approved if the department determines that:

(1) The applicant is qualified by reason of training and experience to use the material in question for the purpose requested in accordance with these regulations in a manner to minimize danger to public health and safety or property;

(2) The applicant's proposed equipment, facilities, and procedures are adequate to minimize danger to public health and safety or property;

(3) The issuance of the license will not harm the health and safety of the public; and

(4) The applicant satisfies any applicable special requirements in WAC 246-235-075 through 246-235-110, and chapters 246-240 through 246-252 WAC.

(5) When an application for a license to receive and possess radioactive material for commercial waste disposal by land burial, source material milling, or for the conduct of any other activity which the agency determines will significantly affect the quality of the environment, the applicant shall not begin construction until the department has weighed the environmental, economic, technical, and other benefits against the environmental costs and has concluded that the issuance of the license is appropriate. Commencement of construction prior to approval by the department shall be grounds for denial of a license to receive and possess radioactive material in the plant or facility. As used in this paragraph the term "commencement of construction" means any clearing of land, excavation, or other substantial action that would adversely affect the environment of a site. The term does not mean site exploration, necessary borings to determine foundation conditions, or other preconstruction monitoring or testing to establish background information related to the suitability of the site or the protection of environmental values.

[Statutory Authority: RCW 70.98.050. 06-05-019, § 246-235-020, filed 2/6/06, effective 3/9/06; 98-13-037, § 246-235-020, filed 6/8/98, effective 7/9/98. Statutory Authority: RCW 70.98.050 and 70.98.080. 91-15-112 (Order 184), § 246-235-020, filed 7/24/91, effective 8/24/91. Statutory Authority: RCW 43.70.040. 91-02-049 (Order 121), recodified as § 246-235-020, filed 12/27/90, effective 1/31/91. Statutory Authority: RCW 70.98.080. 87-01-031 (Order 2450), § 402-22-040, filed 12/11/86. Statutory Authority: Chapter 70.121 RCW. 81-16-031 (Order 1683), § 402-22-040, filed 7/28/81. Statutory Authority: RCW 70.98.080. 79-12-073 (Order 1459), § 402-22-040, filed 11/30/79, effective 1/1/80. Formerly WAC 402-20-060.]

WAC 246-235-030 Issuance of specific licenses. (1) Upon a determination that an application meets the requirements of the act and the regulations of the department the department will issue a specific license authorizing the proposed activity in such form and containing such conditions and limitations as it deems appropriate or necessary.

(2) The department may incorporate in any license at the time of issuance, or thereafter by appropriate rule, regulation, or order, such additional requirements and conditions with respect to the licensee's receipt, possession, use, storage, and transfer of radioactive material subject to this part as it deems appropriate or necessary in order to:

(a) Minimize danger to public health and safety or property;

(b) Require such reports and the keeping of such records, and to provide for such inspections of activities under the license as may be appropriate or necessary; and

(c) Prevent loss or theft of material subject to this part.

[Statutory Authority: RCW 43.70.040. 91-02-049 (Order 121), recodified as § 246-235-030, filed 12/27/90, effective 1/31/91. Statutory Authority: RCW 70.98.080. 87-01-031 (Order 2450), § 402-22-045, filed 12/11/86; 79-12-073 (Order 1459), § 402-22-045, filed 11/30/79, effective 1/1/80. Formerly WAC 402-20-080.]

WAC 246-235-040 Expiration of licenses. Except as provided in WAC 246-235-050(2), each specific license shall expire at the end of the day, in the month and year stated therein.

[Statutory Authority: RCW 70.98.050 and 70.98.080. 91-15-112 (Order 184), § 246-235-040, filed 7/24/91, effective 8/24/91. Statutory Authority: RCW 43.70.040. 91-02-049 (Order 121), recodified as § 246-235-040, filed 12/27/90, effective 1/31/91. Statutory Authority: RCW 70.98.080. 79-12-073 (Order 1459), § 402-22-050, filed 11/30/79, effective 1/1/80. Formerly WAC 402-20-100.]

WAC 246-235-050 Renewal of license. (1) Applications for renewal of specific licenses shall be filed in accordance with WAC 246-235-010.

(2) In any case in which a licensee, not less than thirty days prior to expiration of the existing license, has filed an application in proper form for renewal or for a new license authorizing the same activities, such existing license shall not expire until the application has been finally determined by the department.

[Statutory Authority: RCW 70.98.050 and 70.98.080. 91-15-112 (Order 184), § 246-235-050, filed 7/24/91, effective 8/24/91. Statutory Authority: RCW 43.70.040. 91-02-049 (Order 121), recodified as § 246-235-050, filed 12/27/90, effective 1/31/91. Statutory Authority: RCW 70.98.080. 79-12-073 (Order 1459), § 402-22-055, filed 11/30/79, effective 1/1/80. Formerly WAC 402-20-110.]

WAC 246-235-055 Precedence of license condition over regulation. (1) A license condition may be used to specifically modify any regulation pertaining to the possession, use, storage, transfer, or disposal of radioactive material. Any license condition used to modify an existing regulation shall set forth the title, chapter, section, and, where applicable, any subsection and paragraph numbers for the regulation being modified, and fully define the nature and extent of the modification.

(2) In the event a regulation is changed, an existing license condition that is more restrictive than the new regulation remains in force until there is an amendment or renewal of the license that removes or modifies the license condition.

[Statutory Authority: RCW 70.98.050. 94-01-073, § 246-235-055, filed 12/9/93, effective 1/9/94.]

WAC 246-235-060 Amendment of licenses at request of licensee. Applications for amendment of a license shall be filed in accordance with WAC 246-235-010 and shall specify the respects in which the licensee desires the license to be amended and the grounds for such amendment.

[Statutory Authority: RCW 70.98.050 and 70.98.080. 91-15-112 (Order 184), § 246-235-060, filed 7/24/91, effective 8/24/91. Statutory Authority: RCW 43.70.040. 91-02-049 (Order 121), recodified as § 246-235-060, filed 12/27/90, effective 1/31/91. Statutory Authority: RCW 70.98.080. 83-19-050 (Order 2026), § 402-22-060, filed 9/16/83; 79-12-073 (Order 1459), § 402-22-060, filed 11/30/79, effective 1/1/80. Formerly WAC 402-20-120.]

WAC 246-235-070 Agency action on applications to renew or amend. In considering an application by a licensee to renew or amend the license, the department will apply the criteria set forth in this chapter, as applicable.

[Statutory Authority: RCW 43.70.040. 91-02-049 (Order 121), recodified as § 246-235-070, filed 12/27/90, effective 1/31/91. Statutory Authority: RCW 70.98.080. 87-01-031 (Order 2450), § 402-22-065, filed 12/11/86; 79-12-073 (Order 1459), § 402-22-065, filed 11/30/79, effective 1/1/80. Formerly WAC 402-20-130.]

WAC 246-235-075 Financial assurance and recordkeeping for decommissioning. (1) Each applicant for one of the following licenses shall submit a decommissioning funding plan as described in this section:

(a) A specific license authorizing receipt of radioactive waste for the purpose of volume reduction, repackaging or interim storage.

(b) Receipt of contaminated articles, scrap material, equipment, or clothing to be decontaminated at the licensee's facility.

(c) A specific license authorizing the possession and use of radioactive material of half-life greater than one hundred twenty days and in quantities for unsealed material exceeding 10^3 times and for sealed forms exceeding 10^{10} times the applicable quantities set forth in WAC 246-221-300 Appendix B (for a combination of isotopes the unity rule applies. A decommissioning funding plan will be required if R is greater than 1, where R is defined as the sum of the ratios of the quantity for sealed and unsealed forms of each isotope compared to the applicable value derived from WAC 246-221-300).

(d) A specific license authorizing possession and use of source material in readily dispersible form and in quantities greater than 10 millicuries.

(2) Each decommissioning funding plan shall contain:

(a) A cost estimate for decommissioning facilities impacted by the activities authorized in the specific license.

(b) A description of the method of assuring funds for decommissioning.

(c) A means for adjusting cost estimates and associated funding levels periodically over the life of the facility or facilities.

(d) A description of methods and general procedures for performing facility decontamination, maintaining security, and performing a final radiation survey.

(e) A commitment to clean up accidental spills promptly and to begin decommissioning of the facility or facilities within twelve months of ceasing operation involving radioactive material.

(3) Each cost estimate for decommissioning shall include:

(a) A description of the facility and areas within the facility likely to require decommissioning as a result of routine operation.

(b) Anticipated labor, equipment and material costs.

(c) Anticipated waste volume.

(d) Anticipated packaging, transportation and waste disposal costs.

(e) An assessment of costs associated with an accident involving licensed material.

(4) Each applicant shall submit a certification that financial assurance for decommissioning shall be provided by one or more of the following methods:

(a) Prepayment. Prepayment is the deposit of sufficient funds to pay decommissioning costs. Funds shall be deposited prior to the start of operation into an account segregated from licensee assets and outside the licensee's administrative control. Prepayment may be in the form of a trust, escrow account, government fund, certificate of deposit, or deposit of government securities.

(b) A surety method, insurance, or other guarantee method. These methods guarantee that decommissioning costs will be paid should the licensee default. A surety method may be in the form of a surety bond, letter of credit, or line of credit. Any surety method or insurance used to provide financial assurance for decommissioning must contain the following conditions:

(i) The surety method or insurance shall be open-ended or, if written for a specified term, such as five years, shall be renewed automatically unless ninety days or more prior to the renewal date, the issuer notifies the department, the beneficiary, and the licensee of its intention not to renew. The surety method or insurance shall also require that the full face amount be paid to the beneficiary automatically prior to the expiration without proof of forfeiture if the licensee fails to provide a replacement acceptable to the department within thirty days after receipt of notification of cancellation.

(ii) The surety method or insurance shall be payable to a trust established for decommissioning costs. The trustee and

trust shall be acceptable to the department. Acceptable trustees include an appropriate state or federal government agency or an entity which has the authority to act as a trustee and whose trust operations are regulated and examined by a federal or state agency.

(iii) The surety method or insurance must remain in effect until the department has terminated the license.

(c) An external sinking fund in which deposits are made at least annually, coupled with a surety method or insurance, the value of which may decrease by the amount being accumulated in the sinking fund. An external sinking fund is a fund established and maintained by setting aside funds periodically in an account segregated from licensee assets and outside the licensee's administrative control. The total amount of funds in the external sinking fund shall be sufficient to pay decommissioning costs at the time termination of operation is expected. An external sinking fund may be in the form of a trust, escrow account, government fund, certificate of deposit, or deposit of government securities. The surety or insurance provisions shall be as stated in subsection (4)(b) of this section.

(d) Statement of intent. In the case of state or local government licensees, a statement of intent containing a cost estimate for decommissioning and indicating that funds for decommissioning will be obtained when necessary.

(e) Other methods of financial assurance as approved by the department. The department may approve other financial mechanisms submitted by the applicant or licensee if the alternate method meets, at a minimum, the requirements of 10 C.F.R. 30.35 and associated U.S. Nuclear Regulatory Commission guidance.

(5)(a) The applicant or licensee shall submit to the department an initial decommissioning funding plan prior to license issuance and shall submit an updated plan at intervals not to exceed three years.

(b) The applicant or licensee shall incorporate department comments into the decommissioning funding plan including its cost estimate and shall revise its financial surety accordingly.

(c) Applicants shall obtain the appropriate financial assurance as approved by the department prior to receipt of licensed material. The department may issue a new license if the applicant agrees to comply with the decommissioning funding plan as approved. If the applicant defers execution of the financial instrument until after the license has been issued, a signed original of the financial instrument obtained to satisfy the requirements of this section shall be submitted to the department before receipt of licensed material.

(d) Licensees shall implement the financial assurance requirements within thirty days of receiving department approval of the initial or updated decommissioning funding plan. Licensees shall submit copies of the financial surety within thirty days of securing the surety and annually thereafter.

(6) Each person licensed under this chapter shall keep records of information important to the safe and effective decommissioning of the facility in an identified location until the site is released for unrestricted use. Before licensed activities are transferred or assigned in accordance with WAC 246-232-050(2), licensees shall transfer all records described in this subsection to the new licensee. In this case, the new licensee will be responsible for maintaining these records until the license is terminated by the department. If records of relevant information are kept for other purposes, reference to these records and their locations may be used. Information the department considers important to decommissioning consists of:

(a) Records of spills or other unusual occurrences involving the spread of contamination in and around the facility, equipment, or site. These records may be limited to instances when contamination remains after any cleanup procedures or when there is reasonable likelihood that contaminants may have spread to inaccessible areas as in the case of possible seepage into porous materials such as concrete. These records shall include any known information on identification of involved nuclides, quantities, forms, and concentrations.

(b) As-built drawings and modifications of structures and equipment in restricted areas where radioactive materials are used and/or stored, and of locations of possible inaccessible contamination such as buried pipes which may be subject to contamination. If required drawings are referenced, each relevant document need not be indexed individually. If drawings are not available, the licensee shall substitute appropriate records of available information concerning these areas and locations.

(c) Except for areas containing only sealed sources (provided the sources have not leaked or no contamination remains after any leak) or depleted uranium used only for shielding or as penetrators in unused munitions, or radioactive materials having only half-lives of less than sixty-five days, a list contained in a single document and updated every two years, of the following:

(i) All areas designated and formerly designated as restricted areas as defined under WAC 246-220-010;

(ii) All areas outside of restricted areas that require documentation under (a) of this subsection;

(iii) All areas outside of restricted areas where current and previous wastes have been buried as documented under WAC 246-221-230 (8)(a); and

(iv) All areas outside of restricted areas which contain material such that, if the license expired, the licensee would be required to either decontaminate the area to meet the criteria for decommissioning in chapter 246-246 WAC or apply for approval for disposal under WAC 246-221-180. Records of the cost estimate performed for the decommissioning funding plan or of the amount certified for decommissioning, and records of the funding method used for assuring funds if either a funding plan or certification is used.

[Statutory Authority: RCW 70.98.095 and 70.98.050. 07-03-049, § 246-235-075, filed 1/12/07, effective 2/12/07. Statutory Authority: RCW 70.98.-050. 00-07-085, § 246-235-075, filed 3/15/00, effective 4/15/00; 99-15-105, § 246-235-075, filed 7/21/99, effective 8/21/99. Statutory Authority: RCW 70.98.050 and 70.98.080. 97-08-095, § 246-235-075, filed 4/2/97, effective 5/3/97; 92-06-008 (Order 245), § 246-235-075, filed 2/21/92, effective 3/23/92.]

WAC 246-235-077 Special requirements for emergency planning. (1) Each application to possess radioactive materials in unsealed form, on foils or plated sources, or sealed in glass in excess of the quantities in WAC 246-235-150, "Schedule C—Quantities of radioactive materials

requiring consideration of the need for an emergency plan for responding to a release," must contain either:

(a) An evaluation showing that the maximum dose to a member of the public offsite due to a release of radioactive materials would not exceed 1 rem effective dose equivalent or 5 rems to the thyroid or an intake of 2 milligrams of soluble uranium; or

(b) An emergency plan for responding to the radiological hazards of an accidental release of radioactive material and to the chemical hazards associated with uranium hexafluoride, when present.

(2) One or more of the following factors may be used to support an evaluation submitted under subsection (1)(a) of this section:

(a) The radioactive material is physically separated so that only a portion could be involved in an accident;

(b) All or part of the radioactive material is not subject to release during an accident because of the way it is stored or packaged;

(c) The release fraction in the respirable size range would be lower than the release fraction listed in WAC 246-235-150 Schedule C due to the chemical or physical form of the material;

(d) The solubility of the radioactive material would reduce the dose received;

(e) Facility design or engineered safety features in the facility would cause the release fraction to be lower than listed in WAC 246-235-150 Schedule C;

(f) Operating restrictions or procedures would prevent a release fraction as large as that listed in WAC 246-235-150 Schedule C; or

(g) Other factors appropriate for the specific facility.

(3) An emergency plan for responding to a release of radioactive material submitted under subsection (1)(b) of this section must include the following information:

(a) Facility description. A brief description of the licensee's facility and area near the site.

(b) Types of accidents. An identification of each type of radioactive materials accident for which protective actions may be needed.

(c) Classification of accidents. A system for classifying accidents as alerts or site area emergencies.

(d) Detection of accidents. Identification of the means of detecting each type of accident in a timely manner.

(e) Mitigation of consequences. A brief description of the means and equipment for mitigating the consequences of each type of accident, including those provided to protect workers onsite, and a description of the program for maintaining the equipment.

(f) Assessment of releases. A brief description of the methods and equipment to assess releases of radioactive materials.

(g) Responsibilities. A brief description of the responsibilities of licensee personnel should an accident occur, including identification of personnel responsible for promptly notifying offsite response organizations and the department; also responsibilities for developing, maintaining, and updating the plan.

(h) Notification and coordination. A commitment, and a brief description of the means available, promptly to notify offsite response organizations and request offsite assistance, including medical assistance for the treatment of contaminated injured onsite workers when appropriate. A control point must be established. The notification and coordination must be planned so that unavailability of some personnel, parts of the facility, and some equipment will not prevent the notification and coordination. The licensee shall also commit to notify the department immediately after notification of the appropriate offsite response organizations and not later than one hour after the licensee declares an emergency. These reporting requirements do not supersede or release licensees from complying with the requirements under the Emergency Planning and Community Right-to-Know Act of 1986, Title III, Pub. L. 99-499 or other state or federal reporting requirements.

(i) Information to be communicated. A brief description of the types of information on facility status, radioactive releases, and recommended protective actions, if necessary, to be given to offsite response organizations and to the department.

(j) Training. A brief description of the frequency, performance objectives and plans for the training that the licensee will provide workers on how to respond to an emergency including any special instructions and orientation tours the licensee would offer to fire, police, medical and other emergency personnel. The training shall familiarize personnel with site-specific emergency procedures. Also, the training shall thoroughly prepare site personnel for their responsibilities in the event of accident scenarios postulated as most probable for the specific site, including the use of team training for such scenarios.

(k) Safe shutdown. A brief description of the means of restoring the facility to a safe condition after an accident.

(l) Exercises. Provisions for conducting quarterly communications checks with offsite response organizations and biennial onsite exercises to test response to simulated emergencies. Quarterly communications checks with offsite response organizations must include the check and update of all necessary telephone numbers. The licensee shall invite offsite response organizations to participate in the biennial exercises. Participation of offsite response organizations in biennial exercises although recommended is not required. Exercises must use accident scenarios postulated as most probable for the specific site and the scenarios shall not be known to most exercise participants. The licensee shall critique each exercise using individuals not having direct implementation responsibility for the plan. Critiques of exercises must evaluate the appropriateness of the plan, emergency procedures, facilities, equipment, training of personnel, and overall effectiveness of the response. Deficiencies found by the critiques must be corrected.

(m) Hazardous chemicals. A certification that the licensee or applicant has met its responsibilities under the Emergency Planning and Community Right-to-Know Act of 1986, Title III, Pub. L. 99-499, if applicable to the licensee's or applicant's activities at the proposed place of use of the radioactive material.

(4) The licensee shall allow the offsite response organizations expected to respond in case of an accident sixty days to comment on the licensee's emergency plan before submitting it to the department. The licensee shall provide any com-

ments received within the sixty days to the department with the emergency plan.

[Statutory Authority: RCW 70.98.050. 95-01-108, § 246-235-077, filed 12/21/94, effective 1/21/95.]

WAC 246-235-080 Special requirements for possession and use of medical calibration and reference sources. (1) Leak tests.

(a) Any licensee or registrant who possesses sealed sources as calibration or reference sources shall test for leakage each sealed source containing radioactive material, other than Hydrogen-3, with a half-life greater than thirty days in any form other than gas and/or contamination at least every six months. In the absence of a certificate from a transferor indicating that a test has been made within six months prior to the transfer, the sealed sources shall not be used until tested. However, leak tests are not required when: The source contains 100 microcuries or less of beta and/or gamma emitting material or 10 microcuries or less of alpha emitting material or the sealed source is stored and is not being used: Provided, a physical inventory of the source and wipe surveys of the storage area or storage container are conducted as required by these rules or license condition.

(b) The leak test shall be capable of detecting the presence of 0.005 microcurie (185 becquerels) of radioactive material on the test sample. The test sample shall be taken from the sealed source or from the surfaces of the device in which the sealed source is mounted or stored on which contamination might be expected to accumulate. Records of leak test results shall be kept in units of microcuries and maintained for inspection by the department.

(c) If the leak test reveals the presence of 0.005 microcurie or more of removable contamination, the licensee or registrant shall immediately withdraw the sealed source from use and shall cause it to be decontaminated and repaired or to be disposed of in accordance with chapters 246-235 and 246-221 WAC. The licensee must file a report within five days of the test with the department describing the equipment involved, the test results, and the corrective action taken.

(2) Any licensee or registrant who possesses and uses calibration and reference sources shall:

(a) Follow the radiation safety and handling instructions approved by the department, the United States Nuclear Regulatory Commission, an agreement state or a licensing state and furnished by the manufacturer on the label attached to the source, or permanent container thereof, or in the leaflet or brochure that accompanies the source, and maintain the instructions in a legible and conveniently available form; and

(b) Conduct a quarterly physical inventory to account for all sources received and possessed. Records of the inventories shall be maintained for inspection by the department and shall include at a minimum the quantities and kinds of radioactive material, location of sources, name of person performing the inventory, and the date of the inventory.

[Statutory Authority: RCW 70.98.050. 06-05-019, § 246-235-080, filed 2/6/06, effective 3/9/06; 00-08-013, § 246-235-080, filed 3/24/00, effective 4/24/00; 98-13-037, § 246-235-080, filed 6/8/98, effective 7/9/98. Statutory Authority: RCW 70.98.050 and 70.98.080. 91-15-112 (Order 184), § 246-235-080, filed 7/24/91, effective 8/24/91. Statutory Authority: RCW 43.70.-040. 91-02-049 (Order 121), recodified as § 246-235-080, filed 12/27/90, effective 1/31/91. Statutory Authority: RCW 70.98.080. 87-01-031 (Order 2450), § 402-22-070, filed 12/11/86; 83-19-050 (Order 2026), § 402-22-070, filed 9/16/83. Statutory Authority: RCW 70.98.050. 81-01-011 (Order 1570), § 402-22-070, filed 12/8/80. Statutory Authority: RCW 70.98.080. 79-12-073 (Order 1459), § 402-22-070, filed 11/30/79, effective 1/1/80. Formerly WAC 402-20-070.]

WAC 246-235-084 Special requirements for issuance of specific licenses for industrial radiography. In addition to the requirements set forth in WAC 246-235-020, a specific license for use of sealed sources in industrial radiography will be issued if:

(1) The applicant submits an adequate program for training radiographers and radiographer's assistants that meets the requirements of WAC 246-243-050 and 246-243-130.

(a) After June 30, 2000, a license applicant need not describe its initial training and examination program for radiographers in the subjects outlined in WAC 246-243-230.

(b) From June 30, 2000, to January 1, 2001, a license applicant may affirm that all individuals acting as industrial radiographers will be certified in radiation safety by a certifying entity before beginning duty as radiographers. This affirmation substitutes for a description of its initial training and examination program for radiographers in the subjects outlined in WAC 246-243-230.

(2) The applicant submits procedures for verifying and documenting the certification status of radiographers and for ensuring that the certification of individuals acting as radiographers remains valid.

(3) The applicant submits written operating and emergency procedures as described in WAC 246-243-140.

(4) The applicant submits a description of a program for inspections of the job performance of each radiographer and radiographers' assistant at intervals not to exceed six months as described in WAC 246-243-050.

(5) The applicant submits a description of the applicant's overall organizational structure as it applies to the radiation safety responsibilities in industrial radiography, including specified delegation of authority and responsibility.

(6) The applicant identifies and lists the qualifications of the individual(s) designated as the RSO (WAC 246-243-047) and potential designees responsible for ensuring that the licensee's radiation safety program is implemented in accordance with approved procedures.

(7) If an applicant intends to perform leak testing of sealed sources or of exposure devices containing depleted uranium (DU) shielding, the applicant shall describe the procedures for performing and the qualifications of the person(s) authorized to do the leak testing. If the applicant intends to analyze its own wipe samples, the application must include a description of the procedures to be followed. The description must include the:

(a) Instruments to be used;

(b) Methods of performing the analysis; and

(c) Pertinent experience of the person who will analyze the wipe samples.

(8) If the applicant intends to perform "in-house" calibrations of survey instruments, the applicant must describe methods to be used and the relevant experience of the person(s) who will perform the calibrations. All calibrations must be performed according to these procedures and the intervals prescribed in WAC 246-243-080.

(9) The applicant identifies and describes the location(s) of all field stations and permanent radiographic installations.

(10) The applicant identifies the location where all records required by this section and other sections of these regulations will be maintained.

[Statutory Authority: RCW 70.98.050. 00-08-013, § 246-235-084, filed 3/24/00, effective 4/24/00.]

WAC 246-235-086 Special requirements for environmentally significant licensing actions. In addition to the requirements set forth in WAC 246-235-020, a specific license for any activity within the licensing authority of the department which the department determines will significantly affect the radiological quality of the human environment, including those specified in WAC 197-11-845(1) and 246-03-030 (1)(a)(ii) (i.e., licenses to operate low level waste burial facilities or licenses to operate or expand beyond the design capacity, mineral processing facilities or their tailings areas, whose products, or by-products, have concentrations of naturally occurring radioactive material in excess of exempt concentrations as specified in WAC 246-232-130, Schedule C), will be issued if the following conditions are met:

(1) Environmental impact statement.

(a) The application for a license or license amendment (other than administrative amendments) is accompanied or preceded by a final environmental impact statement or final declaration of nonsignificance completed in accordance with the State Environmental Policy Act (SEPA) procedures and guidelines specified in chapters 197-11 and 246-03 WAC. For any uranium or thorium mill in operation on or before the effective date of this regulation for which an environmental impact statement has not been prepared previously, an application for license renewal must be accompanied or preceded by a final environmental impact statement or final declaration of nonsignificance completed in accordance with SEPA guidelines.

Note: No construction shall be commenced until the license has been issued or unless an emergency exemption from SEPA requirements is granted in accordance with WAC 197-11-880. For the purposes of this subsection, the term "commencement of construction" means any clearing of land, excavation or other substantial action related to a proposed activity for specific licensing that would adversely affect the natural environment of a site; this term does not include changes desirable for the temporary use of the land for public recreational use, limited borings to determine site characteristics as necessary for environmental assessment, or other preconstruction monitoring to establish background information related to suitability of a site or to the protection of environmental values. In the case where an exemption is granted, the applicant shall assume all financial risk for construction activity; waive any claim of entitlement to the issuance of a license based solely upon the grant of the exemption or the commencement of construction pursuant thereto; and furnish, if the circumstances warrant and the department so requires, a financial surety arrangement to insure the protection of the public health, safety and the environment in the event of abandonment, default, or inability of the license applicant to meet the requirements of the act or these regulations.

(b) In addition to the information required in chapter 197-11 WAC, the following additional areas shall be addressed in the final environmental impact statement:

(i) Alternative sites to those chosen by the applicant shall include all alternative sites, whether or not those sites are under the control or ownership of the applicant.

(ii) Long term impacts shall include, but not be limited to, decommissioning, decontamination, reclamation impacts and material management associated with the proposed activities.

(iii) Environmental reviews, dose assessments, ecology, construction effects on biota, impact on the environment from the use of chemicals, and socioeconomic effects shall be addressed.

(iv) Alternative disposal sites and techniques for disposal shall be evaluated to determine if a site or technique is clearly superior.

(2) For uranium or thorium milling operations, a bond made payable to the department of health or other acceptable government agency, and in an amount specified by the department, shall be posted to ensure the protection of the public health and safety in the event of abandonment, default or other inability of the licensee to meet the requirements for reclamation and disposal of tailings and for decommissioning the site. The bond, or a copy thereof when the bond is made payable to another government agency, shall be received by the department prior to issuance of the license, or prior to license renewal for mills in operation on or before the effective date of this regulation. Other acceptable surety arrangements in addition to surety bonding include cash deposits, certificates of deposit, deposits of government securities, letters or lines of credit or combinations of the foregoing. The amount and mechanism of the surety arrangement may be reviewed by the department preceding each license renewal and adjustments may be required of the licensee prior to such renewal.

(3) The owner of the proposed uranium or thorium mill and tailings site(s) agrees to transfer or revert to the appropriate state or federal agency upon termination of the license, all lands, buildings and grounds, and any interest therein, necessary to fulfill the purposes of this subsection, except where the lands are held in trust for, or are owned by, any Indian tribe. For any uranium or thorium mill in operation on or before the effective date of this regulation, such an agreement will be required prior to license renewal.

(4) For all uranium and thorium milling operations, the owner or operator shall arrange to pay to the department or its designee a fee in accordance with WAC 246-254-150 for a special security fund for the further maintenance, surveillance or care which may be required after a licensee has ceased to operate.

A minimum fund of two hundred fifty thousand dollars shall be provided by the licensee payable to the state. If a shortfall exists between the amount of money in the special security fund and the two hundred fifty thousand dollars minimum amount, a surety bond, or other acceptable surety instrument as defined above shall be arranged.

(5) The application for a license includes a description of an appropriate program for effluent monitoring, environmental monitoring and data reporting. The description shall encompass locations, frequency, and types of sampling, analytical plans and procedures, minimum detection levels, sampling equipment and quality assurance programs.

(6) All licensees or registrants required to meet the additional requirements set forth in this subsection shall establish environmental monitoring programs adequate to determine the impact of their activity on the natural environment around

the site of their environmentally significant activity. The established environmental and effluent monitoring program shall address all environmentally significant radionuclide releases and external radiation sources caused or threatened to be caused by the licensee's activities.

(a) Effluent and environmental monitoring results shall include the following minimum information as pertinent:

(i) Information as to flow rates, total volume of effluent, peak concentration, concentration of each radionuclide in the effluent averaged over a period of one year at the point where the effluent leaves a stack, tube, pipe, or similar conduit;

(ii) A description of the properties of the effluents, including:

(A) Chemical composition;

(B) Physical characteristics, including suspended solids content in liquid effluents, and nature of gas aerosol for air effluents;

(C) The hydrogen ion concentrations (pH) of liquid effluents; and

(D) The size range of particulates in effluent released into air;

(iii) A description of the anticipated human occupancy in the unrestricted area where the highest concentration of radioactive material from the effluent is expected, and, in the case of a river or stream, a description of water uses downstream from the point of release of the effluent.

(iv) Information as to the highest concentration of each radionuclide in an unrestricted area, including anticipated concentrations averaged over a period of one year:

(A) In air at any point of human occupancy; or

(B) In water at points of use downstream from the point of release of the effluent;

(v) The background concentration of radionuclides in the receiving river or stream prior to the release of liquid effluent;

(vi) A description of the waste treatment facilities and procedures used to reduce the concentration of radionuclides in effluents prior to their release;

(vii) A written description of sampling techniques and sample analysis methods;

(viii) A written description of how all calculated results were obtained from sample analysis data. This explanation shall include example calculations and estimates of the precision and sensitivity of monitoring results;

(ix) A written description of the licensee's quality control program including specification of control samples and standard samples used.

(b) The licensee shall submit in writing to the department within sixty days after January 1 and July 1 of each year, reports specifying the quantities of each of the principle radionuclides released to unrestricted areas in liquid and in gaseous effluent during the previous six months of operations. This data shall be reported in a manner that will permit the department to confirm the potential annual radiation doses to the public. All data from the radiological and nonradiological environmental monitoring program will also be submitted for the same time period and frequency as specified above. The data shall be reported in a manner which will allow the department to confirm the potential annual radiation doses to the public.

(7) For land disposal of radioactive material, the provisions of chapter 246-250 WAC must also be met.

(8) For operation of mineral processing facilities, the provisions of chapter 246-252 WAC must also be met.

[Statutory Authority: RCW 70.98.050. 00-08-013, § 246-235-086, filed 3/24/00, effective 4/24/00.]

WAC 246-235-090 Special requirements for specific licenses of broad scope. This section prescribes requirements for the issuance of specific licenses of broad scope for radioactive material ("broad licenses") and certain regulations governing holders of these licenses.*

*Note: Authority to transfer possession or control by the manufacturer, processor, or producer of any equipment, device, commodity or other product containing source material or byproduct material whose subsequent possession, use, transfer and disposal by all other persons who are exempted from regulatory requirements may be obtained only from the United States Nuclear Regulatory Commission, Washington, D.C. 20555.

(1) *The different types of broad licenses are listed below*:

(a) A "Type A specific license of broad scope" is a specific license authorizing receipt, acquisition, ownership, possession, use and transfer of any chemical or physical form of the radioactive material specified in the license, but not exceeding quantities specified in the license, for any authorized purpose. The quantities specified are usually in the multicurie range.

(b) A "Type B specific license of broad scope" is a specific license authorizing receipt, acquisition, ownership, possession, use and transfer of any chemical or physical form of radioactive material specified in WAC 246-235-140 Schedule B, for any authorized purpose. The possession limit for a Type B broad license, if only one radionuclide is possessed thereunder, is the quantity specified for that radionuclide in WAC 246-235-140 Schedule B, Column I. If two or more radionuclides are possessed, the possession limit for each is determined as follows: For each radionuclide, determine the ratio of the quantity possessed to the applicable quantity specified in WAC 246-235-140 Schedule B, Column I, for that radionuclide. The sum of the ratios for all radionuclides possessed under the license shall not exceed unity.

(c) A "Type C specific license of broad scope" is a specific license authorizing receipt, acquisition, ownership, possession, use and transfer of any chemical or physical form of radioactive material specified in WAC 246-235-140 Schedule B, for any authorized purpose. The possession limit for a Type C broad license, if only one radionuclide is possessed, is the quantity specified for that radionuclide in WAC 246-235-140 Schedule B, Column II. If two or more radionuclides are possessed, the possession limit is determined for each as follows: For each radionuclide determine the ratio of the quantity possessed to the applicable quantity specified in WAC 246-235-140 Schedule B, Column II, for that radionuclide. The sum of the ratios for all radionuclides possessed under the license shall not exceed unity.

(2) *The department will approve an application for a Type A specific license of broad scope if*:

(a) The applicant satisfies the general requirements specified in WAC 246-235-020.

(b) The applicant has engaged in a reasonable number of activities involving the use of radioactive material; and

(c) The applicant has established administrative controls and provisions relating to organization and management, procedures, recordkeeping, material control and accounting, and management review that are necessary to assure safe operations, including:

(i) The establishment of a radiation safety committee composed of a radiation safety officer, a representative of management, and persons trained and experienced in the safe use of radioactive material;

(ii) The appointment of a radiation safety officer who is qualified by training and experience in radiation protection, and who is available for advice and assistance on radiation safety matters; and

(iii) The establishment of appropriate administrative procedures to assure:

(A) Control of procurement and use of radioactive material;

(B) Completion of safety evaluations of proposed uses of radioactive material which take into consideration such matters as the adequacy of facilities and equipment, training and experience of the user, and the operating or handling procedures; and

(C) Review, approval, and recording by the radiation safety committee of safety evaluation of proposed uses prepared in accordance with item (2)(c)(iii)(B) of this section prior to use of the radioactive material.

(3) *The department will approve an application for a Type B specific license of broad scope if*:

(a) The applicant satisfies the general requirements specified in WAC 246-235-020; and

(b) The applicant has established administrative controls and provisions relating to organization and management, procedures, recordkeeping, material control and accounting, and management review that are necessary to assure safe operations, including:

(i) The appointment of a radiation safety officer who is qualified by training and experience in radiation protection, and who is available for advice and assistance on radiation safety matters; and

(ii) The establishment of appropriate administrative procedures to assure:

(A) Control of procurement and use of radioactive material;

(B) Completion of safety evaluations of proposed uses of radioactive material which take into consideration such matters as the adequacy of facilities and equipment, training and experience of the user, and the operating or handling procedures; and

(C) Review, approval, and recording by the radiation safety officer of safety evaluations of proposed uses prepared in accordance with item (3)(b)(ii)(B) of this section prior to use of the radioactive material.

(4) *The department will approve an application for a Type C specific license of broad scope if*:

(a) The applicant satisfies the general requirements specified in WAC 246-235-020.

(b) The applicant submits a statement that radioactive material will be used only by, or under the direct supervision of individuals, who have received:

(i) A college degree at the bachelor level, or equivalent training and experience, in the physical or biological sciences or in engineering; and

(ii) At least forty hours of training and experience in the safe handling of radioactive material, and in the characteristics of ionizing radiation, units of radiation dose and quantities, radiation detection instrumentation, and biological hazards of exposure to radiation appropriate to the type and forms of radioactive material to be used; and

(c) The applicant has established administrative controls and provisions relating to procurement of radioactive material, procedures, recordkeeping, material control and accounting, and management review necessary to assure safe operations.

(5) *Specific licenses of broad scope are subject to the following conditions*:

(a) Unless specifically authorized by the department, persons licensed under this section shall not:

(i) Conduct tracer studies in the environment involving direct release of radioactive material;

(ii) Receive, acquire, own, possess, use or transfer devices containing 100,000 curies or more of radioactive material in sealed sources used for irradiation of materials;

(iii) Conduct activities for which a specific license issued by the department under chapter 246-240 WAC, WAC 246-235-086 or 246-235-091 through 246-235-105 is required; or

(iv) Add or cause the addition of radioactive material to any food, beverage, cosmetic, drug or other product designed for ingestion or inhalation by, or application to, a human being.

(b) For each Type A specific license of broad scope radioactive material possessed under the license may only be used by, or under the direct supervision of, individuals approved by the licensee's radiation safety committee.

(c) For each Type B specific license of broad scope radioactive material possessed under the license may only be used by, or under the direct supervision of, individuals approved by the licensee's radiation safety officer.

(d) For each Type C specific license of broad scope radioactive material possessed under the license may only be used by, or under the direct supervision of, individuals who satisfy the requirements of subsection (4) of this section.

[Statutory Authority: RCW 70.98.050. 06-05-019, § 246-235-090, filed 2/6/06, effective 3/9/06; 00-08-013, § 246-235-090, filed 3/24/00, effective 4/24/00; 98-13-037, § 246-235-090, filed 6/8/98, effective 7/9/98. Statutory Authority: RCW 70.98.050 and 70.98.080. 91-15-112 (Order 184), § 246-235-090, filed 7/24/91, effective 8/24/91. Statutory Authority: RCW 43.70.-040. 91-02-049 (Order 121), recodified as § 246-235-090, filed 12/27/90, effective 1/31/91. Statutory Authority: RCW 70.98.080. 79-12-073 (Order 1459), § 402-22-090, filed 11/30/79, effective 1/1/80. Formerly WAC 402-20-073.]

WAC 246-235-091 Manufacture and distribution of industrial products containing depleted uranium under general license. (1) An application for a specific license to manufacture industrial products and devices containing depleted uranium for use pursuant to WAC 246-233-010(4) or equivalent regulations of the United States Nuclear Regulatory Commission or an agreement state will be approved if:

(a) The applicant satisfies the general requirements specified in WAC 246-235-020;

(b) The applicant submits sufficient information relating to the design, manufacture, prototype testing, quality control procedures, labeling or marking, proposed uses and potential hazards of the industrial product or device to provide reasonable assurance that possession, use or transfer of the depleted uranium in the product or device is not likely to cause any individual to receive in one year a radiation dose in excess of ten percent of the limits specified in WAC 246-221-010(1); and

(c) The applicant submits sufficient information regarding the industrial product or device and the presence of depleted uranium for a mass-volume application in the product or device to provide reasonable assurance that unique benefits will accrue to the public because of the usefulness of the product or device.

(2) In the case of an industrial product or device whose unique benefits are questionable, the department will approve an application for a specific license under this section only if the product or device is found to combine a high degree of utility and low probability of uncontrolled disposal and dispersal of significant quantities of depleted uranium into the environment.

(3) The department may deny any application for a specific license under this section if the end use(s) of the industrial product or device cannot be reasonably foreseen.

(4) Each person licensed pursuant to subsection (1) of this section shall:

(a) Maintain the level of quality control required by the license in the manufacture of the industrial product or device, and in the installation of the depleted uranium into the product or device;

(b) Label or mark each unit to:

(i) Identify the manufacturer of the product or device and the number of the license under which the product or device was manufactured, the fact that the product or device contains depleted uranium, and the quantity of depleted uranium in each product or device; and

(ii) State that the receipt, possession, use and transfer of the product or device are subject to a general license or the equivalent and the regulations of the United States Nuclear Regulatory Commission or of an agreement state;

(c) Assure that the depleted uranium before being installed in each product or device has been impressed with the following legend clearly legible through any plating or other covering: "Depleted uranium";

(d) Furnish to each person to whom depleted uranium in a product or device is transferred for use pursuant to the general license contained in WAC 246-233-010(4) or its equivalent:

(i) A copy of the general license contained in WAC 246-233-010(4) and a copy of department Form RHF-20; or

(ii) A copy of the general license contained in the United States Nuclear Regulatory Commission's or agreement state's regulation equivalent to WAC 246-233-010(4) and a copy of the United States Nuclear Regulatory Commission's or agreement state's certificate, or alternatively, furnish a copy of the general license contained in WAC 246-233-010(4) and a copy of department Form RHF-20 with a note explaining that use of the product or device is regulated by the United States Nuclear Regulatory Commission or an agreement state under requirements substantially the same as those in WAC 246-233-010(4).

(e) Report to the department all transfers of industrial products or devices to persons for use under the general license in WAC 246-233-010(4). Such report shall identify each general licensee by name and address, an individual by name and/or position who may constitute a point of contact between the department and the general licensee, the type and model number of device transferred, and the quantity of depleted uranium contained in the product or device. The report shall be submitted within thirty days after the end of each calendar quarter in which such a product or device is transferred to the generally licensed person. If no transfers have been made to persons generally licensed under chapter 246-233 WAC during the reporting period, the report shall so indicate;

(f) Provide certain other reports as follows:

(i) Report to the United States Nuclear Regulatory Commission all transfers of industrial products or devices to persons for use under the United States Nuclear Regulatory Commission general license in Section 40.25 of 10 CFR Part 40;

(ii) Report to the responsible department all transfers of devices manufactured and distributed pursuant to this section for use under a general license in that state's regulations equivalent to WAC 246-233-010(4);

(iii) Such report shall identify each general licensee by name and address, an individual by name and/or position who may constitute a point of contact between the department and the general licensee, the type and model number of the device transferred, and the quantity of depleted uranium contained in the product or device. The report shall be submitted within thirty days after the end of each calendar quarter in which such product or device is transferred to the generally licensed person;

(iv) If no transfers have been made to United States Nuclear Regulatory Commission licensees during the reporting period, this information shall be reported to the United States Nuclear Regulatory Commission;

(v) If no transfers have been made to general licensees within a particular agreement state during the reporting period, this information shall be reported to the responsible department; and

(g) Keep records showing the name, address and point of contact for each general licensee to whom the person transfers depleted uranium in industrial products or devices for use pursuant to the general license provided in WAC 246-233-010(4) or equivalent regulations of the United States Nuclear Regulatory Commission or of an agreement state. The records shall be maintained for a period of two years and shall show the date of each transfer, the quantity of depleted uranium in each product or device transferred, and compliance with the report requirements of this section.

[Statutory Authority: RCW 70.98.050. 98-13-037, § 246-235-091, filed 6/8/98, effective 7/9/98.]

WAC 246-235-093 Manufacture, assembly or distribution of devices under general license. (1) An application for a specific license to manufacture or initially transfer or distribute devices containing radioactive material, excluding special nuclear material, to persons generally licensed under

WAC 246-233-020 or equivalent regulations of the United States Nuclear Regulatory Commission, an agreement state or a licensing state will be approved if:

(a) The applicant satisfies the general requirements of WAC 246-235-020;

(b) The applicant submits sufficient information relating to the design, manufacture, prototype testing, quality control, labels, proposed uses, installation, servicing, leak testing, operating and safety instructions, and potential hazards of the device to provide reasonable assurance that:

(i) The device can be safely operated by persons not having training in radiological protection;

(ii) Under ordinary conditions of handling, storage and use of the device, the radioactive material contained in the device will not be released or inadvertently removed from the device, and it is unlikely that any person will receive in one year a dose in excess of ten percent of the limits specified in the table in WAC 246-221-010(1); and

(iii) Under accident conditions (such as fire and explosion) associated with handling, storage and use of the device, it is unlikely that any person would receive an external radiation dose or dose commitment in excess of the following organ doses:

Whole body; head and trunk; active blood-forming organs; gonads; or lens of eye . . . . . 15 rems
Hands and forearms; feet and ankles; localized areas of skin averaged over areas no larger than one square centimeter . . . . . 200 rems
Other organs . . . . . 50 rems

(c) Each device bears a durable, legible, clearly visible label or labels approved by the department, which contain in a clearly identified and separate statement:

(i) Instructions and precautions necessary to assure safe installation, operation and servicing of the device (documents such as operating and service manuals may be identified in the label and used to provide this information);

(ii) The requirement, or lack of requirement, for leak testing, or for testing any on-off mechanism and indicator, including the maximum time interval for such testing, and the identification of radioactive material by isotope, quantity of radioactivity, and date of determination of the quantity; and

(iii) The information called for in one of the following statements, as appropriate, in the same or substantially similar form:

(A) The receipt, possession, use and transfer of this device, Model. . . . . , Serial No.. . . . . Note*, are subject to a general license or the equivalent, and the regulations of the United States Nuclear Regulatory Commission or a state with which the United States Nuclear Regulatory Commission has entered into an agreement for the exercise of regulatory authority. This label shall be maintained on the device in a legible condition. Removal of this label is prohibited.

CAUTION - RADIOACTIVE MATERIAL

. . . . . .
(Name of manufacturer or distributor)*

(B) The receipt, possession, use and transfer of this device, Model . . . . . , Serial No.. . . . . Note*, are subject to a general license or the equivalent, and the regulations of a licensing state. This label shall be maintained on the device in a legible condition. Removal of this label is prohibited.

CAUTION - RADIOACTIVE MATERIAL

. . . . . .
(Name of manufacturer or distributor)*

*Note: The model, serial number, and name of the manufacturer or distributor may be omitted from this label provided the information is elsewhere specified in labeling affixed to the device.

(d) Each device having a separable source housing that provides the primary shielding for the source also bears, on the source housing, a durable label containing the device model number and serial number, the isotope and quantity, the words, "CAUTION - RADIOACTIVE MATERIAL," the radiation symbol described in WAC 246-221-120, and the name of the manufacturer or initial distributor;

(e) Each device meeting the criteria of WAC 246-233-020 (3)(k), bears a permanent (e.g., embossed, etched, stamped, or engraved) label affixed to the source housing if separable, or the device if the source housing is not separable, that includes the words, "CAUTION - RADIOACTIVE MATERIAL," and, if practicable, the radiation symbol described in WAC 246-221-120.

(2) In the event the applicant desires that the device be required to be tested at intervals longer than six months, either for proper operation of the on-off mechanism and indicator, if any, or for leakage of radioactive material or for both, the applicant shall include in the application sufficient information to demonstrate that such longer interval is justified by performance characteristics of the device or similar devices and by design features which have a significant bearing on the probability or consequences of leakage of radioactive material from the device or failure of the on-off mechanism and indicator. In determining the acceptable interval for the test for leakage of radioactive material, the department will consider information which includes, but is not limited to:

(a) Primary containment (source capsule);

(b) Protection of primary containment;

(c) Method of sealing containment;

(d) Containment construction materials;

(e) Form of contained radioactive material;

(f) Maximum temperature withstood during prototype tests;

(g) Maximum pressure withstood during prototype tests;

(h) Maximum quantity of contained radioactive material;

(i) Radiotoxicity of contained radioactive material; and

(j) Operating experience with identical devices or similarly designed and constructed devices.

(3) In the event the applicant desires that the general licensee under WAC 246-233-020, or under equivalent regulations of the United States Nuclear Regulatory Commission, an agreement state or a licensing state be authorized to install the device, collect the sample to be analyzed by a specific licensee for leakage of radioactive material, service the device, test the on-off mechanism and indicator, or remove the device from installation, the applicant shall include in the application written instructions to be followed by the general licensee, estimated calendar quarter doses associated with such activity or activities, and bases for such estimates. The submitted information shall demonstrate that performance of such activity or activities by an individual untrained in radio-

logical protection, in addition to other handling, storage, and use of devices under the general license, is unlikely to cause that individual to receive in one year a radiation dose in excess of ten percent of the limits specified in the table in WAC 246-221-010(1).

(4) Each person licensed under subsection (1) of this section to distribute or initially transfer devices to generally licensed persons shall, prior to the transfer to the intended user or the initial transfer to an intermediate person, if used:

(a) Furnish to the intended user and to each person to whom a device is transferred as an intermediary, the following:

(i) A copy of the general license contained in WAC 246-233-020. If WAC 246-233-020 (3)(b), (c), and (d) or (k) do not apply, those subsections may be omitted;

(ii) A copy of WAC 246-232-050, 246-221-230, 246-221-240, and 246-221-250;

(iii) A list of the services that can only be performed by a specific licensee; and

(iv) Information on acceptable disposal options including estimated costs of disposal;

(b) Furnish to the intended user in another jurisdiction and to each person to whom a device is transferred as an intermediary, the following:

(i) A copy of the appropriate regulations, equivalent to WAC 246-233-020, 246-232-050, 246-221-230, 246-221-240, and 246-221-250, contained in the United States Nuclear Regulatory Commission's, agreement state's, or licensing state's regulation. If a copy of the general license in WAC 246-233-020 is furnished to such a person, it shall be accompanied by a note explaining that the use of the device is regulated by the United States Nuclear Regulatory Commission, agreement state or licensing state under requirements substantially the same as those in WAC 246-233-020. If certain subsections do not apply to the particular device, those subsections may be omitted;

(ii) A list of the services that can only be performed by a specific licensee;

(iii) Information on acceptable disposal options including estimated cost of disposal;

(iv) The name or title, address, and phone number of the contact at the appropriate regulatory agency from which additional information may be obtained; and

(v) An indication that U.S. Nuclear Regulatory Commission policy is to issue high civil penalties for improper disposal;

(c) Report to the department all transfers of such devices to persons for use under the general license in WAC 246-233-020 and all receipts of devices from persons licensed under WAC 246-233-020.

(i) Such report shall include:

(A) The identity of each general licensee by name and mailing address for the location of use; if there is no mailing address for the location of use, an alternative address for the general licensee shall be submitted along with information on the actual location of use;

(B) The name, title, and phone number of the person identified by the general licensee as having knowledge of and authority to take required actions to ensure compliance with the appropriate regulations and requirements;

(C) The date of transfer;

(D) The type, model number and serial number of device transferred; and

(E) The quantity and type of radioactive material contained in the device.

(ii) If one or more intermediate persons will temporarily possess the device at the intended place of use prior to its possession by the user, the report shall include identification of each intermediate person by name, address, contact, and relationship to the intended user.

(iii) For devices received from persons generally licensed under WAC 246-233-020, the report must include:

(A) The identity of the general licensee by name and address;

(B) The type, model number, and serial number of the device received;

(C) The date of receipt; and

(D) In the case of devices not initially transferred by the reporting licensee, the name of the manufacturer or initial transferor.

(iv) If the licensee makes changes to a device possessed by a person generally licensed under WAC 246-233-020, such that the label must be changed to update required information, the report must identify the general licensee, the device, and the changes to information on the device label.

(v) If no transfers have been made to or from persons generally licensed under WAC 246-233-020 during the reporting period, the report shall so indicate.

(vi) The report shall cover each calendar quarter, shall clearly indicate the period covered by the report, and shall be filed within thirty days of the end of the calendar quarter.

(vii) The report shall clearly identify the specific licensee submitting the report and include the license number of the specific licensee.

(d) Reports to other departments.

(i) Report to the United States Nuclear Regulatory Commission all transfers of such devices to persons for use under the United States Nuclear Regulatory Commission general license in Section 31.5 of 10 CFR Part 31 and all receipts of devices therefrom.

(ii) Report to the responsible department all transfers of devices manufactured and distributed pursuant to this section for use under a general license in that state's regulations equivalent to WAC 246-233-020 and all receipts of devices from persons generally licensed under WAC 246-233-020 or equivalent.

(iii) Such reports shall include:

(A) The identity of each general licensee by name and mailing address for the location of use; if there is no mailing address for the location of use, an alternative address for the general licensee shall be submitted along with information on the actual location of use;

(B) The name, title, and phone number of the person identified by the general licensee as having knowledge of and authority to take required actions to ensure compliance with the appropriate regulations and requirements;

(C) The date of transfer;

(D) The type and model of the device transferred; and

(E) The quantity and type of radioactive material contained in the device.

(iv) If one or more intermediate persons will temporarily possess the device at the intended place of use prior to its pos-

session by the user, the report shall include identification of each intermediate person by name, address, contact, and relationship to the intended user.

(v) For devices received from persons generally licensed under WAC 246-233-020, the report must include:

(A) The identity of the general licensee by name and address;

(B) The type, model number, and serial number of the device received;

(C) The date of receipt; and

(D) In the case of devices not initially transferred by the reporting licensee, the name of the manufacturer or initial transferor.

(vi) If the licensee makes changes to a device possessed by a person generally licensed under WAC 246-233-020, such that the label must be changed to update required information, the report must identify the general licensee, the device, and the changes to information on the device label.

(vii) The report shall be submitted within thirty days after the end of each calendar quarter in which such a device is transferred to the generally licensed person and shall clearly indicate the period covered by the report.

(viii) The report shall clearly identify the specific licensee submitting the report and include the license number of the specific licensee.

(ix) If no transfers have been made to United States Nuclear Regulatory Commission licensees during the reporting period, this information shall be reported to the United States Nuclear Regulatory Commission.

(x) If no transfers have been made to general licensees within a particular state during the reporting period, this information shall be reported to the responsible department upon request of the department.

(e) Keep records concerning transfers and receipts of devices that support the reports required by this section. Records required by this section shall be maintained for a period of three years following the date of the recorded event.

(f) If a notification of bankruptcy has been made under WAC 246-233-050 or the license is to be terminated, each person licensed under this section shall provide, upon request, to the department, the United States Nuclear Regulatory Commission, an agreement state, or a licensing state, records of final disposition required under subsection (4) of this section.

[Statutory Authority: RCW 70.98.050. 04-04-055, § 246-235-093, filed 1/30/04, effective 3/1/04; 98-13-037, § 246-235-093, filed 6/8/98, effective 7/9/98.]

WAC 246-235-095 Manufacture, assembly, or distribution of luminous safety devices, certain calibration sources or ice detectors under general license. (1) *Special requirements for the manufacture, assembly or repair of luminous safety devices for use in aircraft.* An application for a specific license to manufacture, assemble or repair luminous safety devices containing tritium or promethium-147 for use in aircraft for distribution to persons generally licensed under WAC 246-233-025 will be approved subject to the following conditions:

(a) The applicant satisfies the general requirements specified in WAC 246-235-020; and

(b) The applicant satisfies the requirements of Sections 32.53, 32.54, 32.55, 32.56, 32.101 of 10 CFR Part 32 or their equivalent.

(2) *Special requirements for license to manufacture calibration sources containing americium-241, plutonium or radium-226 for distribution to persons generally licensed under WAC 246-233-035.* An application for a specific license to manufacture calibration and reference sources containing americium-241, plutonium or radium-226 to persons generally licensed under WAC 246-233-035 will be approved subject to the following conditions:

(a) The applicant satisfies the general requirement of WAC 246-235-020; and

(b) The applicant satisfies the requirements of Sections 32.57, 32.58, 32.59, 32.102 of 10 CFR Part 32 and Section 70.39 of 10 CFR Part 70 or their equivalent.

(3) *Licensing the manufacture and distribution of ice detection devices.* An application for a specific license to manufacture and distribute ice detection devices to persons generally licensed under WAC 246-233-030 will be approved subject to the following conditions:

(a) The applicant satisfies the general requirements of WAC 246-235-020; and

(b) The criteria of Sections 32.61, 32.62, 32.103 of 10 CFR Part 32 are met.

[Statutory Authority: RCW 70.98.050. 04-04-055, § 246-235-095, filed 1/30/04, effective 3/1/04; 98-13-037, § 246-235-095, filed 6/8/98, effective 7/9/98.]

WAC 246-235-097 Manufacture and distribution of radioactive material for certain in vitro clinical or laboratory testing under general license. An application for a specific license to manufacture or distribute radioactive material for use under the general license of WAC 246-233-040 will be approved if:

(1) The applicant satisfies the general requirements specified in WAC 246-235-020;

(2) The radioactive material is to be prepared for distribution in prepackaged units of:

(a) Iodine-125 in units not exceeding 10 microcuries each;

(b) Iodine-131 in units not exceeding 10 microcuries each;

(c) Carbon-14 in units not exceeding 10 microcuries each;

(d) Hydrogen-3 (tritium) in units not exceeding 50 microcuries each;

(e) Iron-59 in units not exceeding 20 microcuries each;

(f) Cobalt-57 in units not exceeding 10 microcuries each;

(g) Selenium-75 in units not exceeding 10 microcuries each;

(h) Mock Iodine-125 in units not exceeding 0.05 microcurie of iodine-129 and 0.005 microcurie of americium-241 each.

(3) Each prepackaged unit bears a durable, clearly visible label:

(a) Identifying the radioactive contents as to chemical form and radionuclide, and indicating that the amount of radioactivity does not exceed 10 microcuries of iodine-125, iodine-131, carbon-14, cobalt-57, or selenium-75; 50 microcuries of hydrogen-3 (tritium); 20 microcuries of iron-59; or

Mock Iodine-125 in units not exceeding 0.05 microcurie of iodine-129 and 0.005 microcurie of americium-241 each; and

(b) Displaying the radiation caution symbol described in WAC 246-221-120 (1)(a) and the words, "CAUTION, RADIOACTIVE MATERIAL," and "Not for internal or external use in humans or animals."

(4) One of the following statements, as appropriate, or a substantially similar statement which contains the information called for in one of the following statements, appears on a label affixed to each prepackaged unit or appears in a leaflet or brochure which accompanies the package:

(a) This radioactive material may be received, acquired, possessed and used only by physicians, veterinarians, clinical laboratories or hospitals and only for *in vitro* clinical or laboratory tests not involving internal or external administration of the material, or the radiation therefrom, to human beings or animals. Its receipt, acquisition, possession, use and transfer are subject to the regulations and a general license of the United States Nuclear Regulatory Commission or of a state with which the commission has entered into an agreement for the exercise of regulatory authority.

. . . . . .
Name of manufacturer

(b) This radioactive material may be received, acquired, possessed and used only by physicians, veterinarians, clinical laboratories or hospitals and only for *in vitro* clinical or laboratory tests not involving internal or external administration of the material, or the radiation therefrom, to human beings or animals. Its receipt, acquisition, possession, use and transfer are subject to the regulations and a general license of a licensing state.

. . . . . .
Name of manufacturer

(5) The label affixed to the unit, or the leaflet or brochure which accompanies the package, contains adequate information as to the precautions to be observed in handling and storing such radioactive material. In the case of the Mock Iodine-125 reference or calibration source, the information accompanying the source must also contain directions to the licensee regarding the waste disposal requirements set out in WAC 246-221-170 of these regulations.

[Statutory Authority: RCW 70.98.050. 04-04-055, § 246-235-097, filed 1/30/04, effective 3/1/04; 98-13-037, § 246-235-097, filed 6/8/98, effective 7/9/98.]

WAC 246-235-100 Manufacture, preparation, or commercial transfer of radiopharmaceuticals for medical use. (1) An application for a specific license to manufacture and, prepare, or transfer for commercial distribution radiopharmaceuticals containing radioactive material for use by persons licensed under chapter 246-240 WAC for medical use in humans will be approved if:

(a) The applicant satisfies the general requirements specified in WAC 246-235-020;

(b) The applicant submits evidence that:

(i) The applicant is registered or licensed with the U.S. Food and Drug Administration (FDA) as a drug manufacturer; or

(ii) The applicant is licensed as a nuclear pharmacy by the state board of pharmacy;

(c) The applicant submits information on the radionuclide, chemical and physical form, maximum activity per vial, syringe, generator, or other container of the radiopharmaceutical, and shielding provided by the packaging of the radioactive material which is appropriate for safe handling and storage of radiopharmaceuticals by medical use licensees; and

(d) The applicant satisfies the labeling requirements specified by the state board of pharmacy in WAC 246-903-020. For a drug manufacturer, the labels required by this subsection are in addition to the labeling required by the Food and Drug Administration (FDA) and may be separate from or, with the approval of FDA, may be combined with the labeling required by FDA.

(2) A nuclear pharmacy licensee:

(a) May prepare radiopharmaceuticals for medical use provided the radiopharmaceutical is prepared by or under the supervision of an authorized nuclear pharmacist.

(b) May allow a pharmacist to work as an authorized nuclear pharmacist if:

(i) This individual qualifies as an authorized nuclear pharmacist as defined in WAC 246-240-010;

(ii) This individual meets the state board of pharmacy requirements in WAC 246-903-030, Nuclear pharmacists, and the requirements of WAC 246-240-081 and the licensee has received an approved license amendment identifying this individual as an authorized nuclear pharmacist; or

(iii) This individual is designated as an authorized nuclear pharmacist in accordance with (d) of this subsection.

(c) The actions authorized in (a) and (b) of this subsection are permitted in spite of more restrictive language in license conditions.

(d) May designate a pharmacist as an authorized nuclear pharmacist if the individual is identified as of December 2, 1994, as an "authorized user" on a nuclear pharmacy license issued by the department, the U.S. NRC, or an agreement state.

(e) Shall provide to the department a copy of each individual's letter of notification from the state board of pharmacy recognizing the individual as a nuclear pharmacist, within thirty days of the date the licensee allows the individual to work as an authorized nuclear pharmacist under (b) of this subsection.

(3) A manufacturer or nuclear pharmacy licensee shall possess and use instrumentation to measure the radioactivity of radiopharmaceuticals. The licensee shall have procedures for use of the instrumentation. The licensee shall measure, by direct measurement or by combination of measurements and calculations, the amount of radioactivity in dosages of alpha-, beta-, or photon-emitting radiopharmaceuticals, prior to transfer for commercial distribution. In addition, the licensee shall:

(a) Perform tests before initial use, periodically, and following repair, on each instrument for accuracy, linearity, and geometry dependence, as appropriate for the use of the instrument; and make adjustments when necessary; and

(b) Check each instrument for constancy and proper operation at the beginning of each day of use.

(4) Nothing in this section relieves the licensee from complying with applicable FDA, other federal, and state requirements governing radiopharmaceuticals.

[Statutory Authority: RCW 70.98.050. 07-14-131, § 246-235-100, filed 7/3/07, effective 8/3/07; 06-05-019, § 246-235-100, filed 2/6/06, effective 3/9/06; 98-13-037, § 246-235-100, filed 6/8/98, effective 7/9/98. Statutory Authority: RCW 70.98.050 and 70.98.080. 91-15-112 (Order 184), § 246-235-100, filed 7/24/91, effective 8/24/91. Statutory Authority: RCW 43.70.-040. 91-02-049 (Order 121), recodified as § 246-235-100, filed 12/27/90, effective 1/31/91. Statutory Authority: RCW 70.98.050. 81-01-011 (Order 1570), § 402-22-110, filed 12/8/80. Statutory Authority: RCW 70.98.080. 79-12-073 (Order 1459), § 402-22-110, filed 11/30/79, effective 1/1/80. Formerly WAC 402-20-076.]

WAC 246-235-102 Manufacture and distribution of sources or devices containing radioactive material for medical use. An application for a specific license to manufacture and distribute sources and devices containing radioactive material to persons licensed under chapter 246-240 WAC for use as a calibration, transmission, or reference source or for the uses listed in WAC 246-240-251, 246-240-301, and 246-240-351 will be approved if:

(1) The applicant satisfies the general requirements in WAC 246-235-020;

(2) The applicant submits sufficient information regarding each type of source or device pertinent to an evaluation of its radiation safety, including:

(a) The radioactive material contained, its chemical and physical form and amount;

(b) Details of design and construction of the source or device;

(c) Procedures for, and results of, prototype tests to demonstrate that the source or device will maintain its integrity under stresses likely to be encountered in normal use and accidents;

(d) For devices containing radioactive material, the radiation profile of a prototype device;

(e) Details of quality control procedures to assure that production sources and devices meet the standards of the design and prototype tests;

(f) Procedures and standards for calibrating sources and devices;

(g) Legend and methods for labeling sources and devices as to their radioactive content; and

(h) Instructions for handling and storing the source or device from the radiation safety standpoint, these instructions are to be included on a durable label attached to the source or device or attached to a permanent storage container for the source or device: Provided that instructions which are too lengthy for the label may be summarized on the label and printed in detail on a brochure which is referenced on the label.

(3) The label affixed to the source or device, or to the permanent storage container for the source or device, contains information on the radionuclide, quantity and date of assay, and a statement that the named source or device is licensed by the department for distribution to persons licensed under chapter 246-240 WAC or under equivalent regulations of the United States Nuclear Regulatory Commission, an agreement state or a licensing state: Provided that the labeling for sources which do not require long term storage may be on a leaflet or brochure which accompanies the source.

(4) If the applicant desires that the source or device be tested for leakage of radioactive material at intervals longer than six months, the applicant shall include in the application sufficient information to demonstrate that the longer interval is justified by performance characteristics of the source or device or similar sources or devices and by design features that have a significant bearing on the probability or consequences of leakage of radioactive material from the source.

(5) In determining the acceptable interval for test of leakage of radioactive material, the department will consider information that includes, but is not limited to:

(a) Primary containment (source capsule);

(b) Protection of primary containment;

(c) Method of sealing containment;

(d) Containment construction materials;

(e) Form of contained radioactive material;

(f) Maximum temperature withstood during prototype tests;

(g) Maximum pressure withstood during prototype tests;

(h) Maximum quantity of contained radioactive material;

(i) Radiotoxicity of contained radioactive material; and

(j) Operating experience with identical sources or devices or similarly designed and constructed sources or devices.

[Statutory Authority: RCW 70.98.050. 07-14-131, § 246-235-102, filed 7/3/07, effective 8/3/07; 06-05-019, § 246-235-102, filed 2/6/06, effective 3/9/06; 98-13-037, § 246-235-102, filed 6/8/98, effective 7/9/98.]

WAC 246-235-105 Manufacture, assembly or distribution of radioactive material exempt from regulation. (1) *Licensing the introduction of radioactive material into products in exempt concentrations.* In addition to the requirements set forth in WAC 246-235-020, a specific license authorizing the introduction of radioactive material into a product or material owned by or in the possession of the licensee or another to be transferred to persons exempt under WAC 246-232-010(1) will be issued if:

(a) The applicant submits a description of the product or material into which the radioactive material will be introduced, intended use of the radioactive material and the product or material into which it is introduced, method of introduction, initial concentration of the radioactive material in the product or material, control methods to assure that no more than the specified concentration is introduced into the product or material, estimated time interval between introduction and transfer of the product or material, and estimated concentration of the radioactive material in the product or material at the time of transfer; and

(b) The applicant provides reasonable assurance that the concentrations of radioactive material at the time of transfer will not exceed the concentrations in WAC 246-232-130, Schedule C, that reconstruction of the radioactive material in concentrations exceeding those in WAC 246-232-130, Schedule C, is not likely, that use of lower concentrations is not feasible, and that the product or material is not likely to be incorporated in any food, beverage, cosmetic, drug or other commodity or product designed for ingestion or inhalation by, or application to a human being.

(c) Each person licensed under subsection (1) of this section shall file an annual report with the department which shall identify the type and quantity of each product or material into which radioactive material has been introduced during the reporting period; name and address of the person who owned or possessed the product and material, into which radioactive material has been introduced, at the time of introduction; the type and quantity of radionuclide introduced into each such product or material; and the initial concentrations of the radionuclide in the product or material at time of transfer of the radioactive material by the licensee. If no transfers of radioactive material have been made pursuant to subsection (1) of this section during the reporting period, the report shall so indicate. The report shall cover the year ending June 30, and shall be filed within thirty days thereafter.

(2) Licensing the distribution of certain radioactive material in exempt quantities.*

*Note: Authority to transfer possession or control by the manufacturer, processor or producer of any equipment, device, commodity or other product containing source material or byproduct material whose subsequent possession, use, transfer and disposal by all other persons who are exempted from regulatory requirements may be obtained only from the United States Nuclear Regulatory Commission, Washington, D.C. 20555.

(a) An application for a specific license to distribute naturally occurring and accelerator-produced radioactive material (NARM) to persons exempted from these regulations pursuant to WAC 246-232-010 (2)(b) will be approved if:

(i) The radioactive material is not contained in any food, beverage, cosmetic, drug or other commodity designed for ingestion or inhalation by, or application to, a human being;

(ii) The radioactive material is in the form of processed chemical elements, compounds, or mixtures, tissue samples, bioassay samples, counting standards, plated or encapsulated sources, or similar substances, identified as radioactive and to be used for its radioactive properties, but is not incorporated into any manufactured or assembled commodity, product, or device intended for commercial distribution; and

(iii) The applicant submits copies of prototype labels and brochures and the department approves such labels and brochures.

(b) The license issued under paragraph (2)(a) of this section is subject to the following conditions:

(i) No more than ten exempt quantities shall be sold or transferred in any single transaction. However, an exempt quantity may be composed of fractional parts of one or more of the exempt quantity provided the sum of the fractions shall not exceed unity.

(ii) Each exempt quantity shall be separately and individually packaged. No more than ten such packaged exempt quantities shall be contained in any outer package for transfer to persons exempt pursuant to WAC 246-232-010 (2)(b). The outer package shall be such that the dose rate at the external surface of the package does not exceed 0.5 millirem per hour.

(iii) The immediate container of each quantity or separately packaged fractional quantity of radioactive material shall bear a durable, legible label which:

(A) Identifies the radionuclide and the quantity of radioactivity; and

(B) Bears the words "radioactive material."

(iv) In addition to the labeling information required by item (2)(b)(iii) of this section, the label affixed to the immediate container, or an accompanying brochure, shall:

(A) State that the contents are exempt from licensing state requirements;

(B) Bear the words "Radioactive material—Not for human use—Introduction into foods, beverages, cosmetics, drugs, or medicinals, or into products manufactured for commercial distribution is prohibited—Exempt quantities should not be combined"; and

(C) Set forth appropriate additional radiation safety precautions and instructions relating to the handling, use, storage and disposal of the radioactive material.

(c) Each person licensed under paragraph (2)(a) of this section shall maintain records identifying, by name and address, each person to whom radioactive material is transferred for use under WAC 246-232-010 (2)(b) or the equivalent regulations of a licensing state, and stating the kinds and quantities of radioactive material transferred. An annual summary report stating the total quantity of each radionuclide transferred under the specific license shall be filed with the department. Each report shall cover the year ending June 30, and shall be filed within thirty days thereafter. If no transfers of radioactive material have been made pursuant to subsection (2) of this section during the reporting period, the report shall so indicate.

(3) *Licensing the incorporation of naturally occurring and accelerator-produced radioactive material into gas and aerosol detectors.* An application for a specific license authorizing the incorporation of NARM into gas and aerosol detectors to be distributed to persons exempt under WAC 246-232-012 will be approved if the application satisfies requirements equivalent to those contained in Section 32.26 of 10 CFR Part 32.

[Statutory Authority: RCW 70.98.050. 01-02-067, § 246-235-105, filed 12/29/00, effective 1/29/01; 98-13-037, § 246-235-105, filed 6/8/98, effective 7/9/98.]

WAC 246-235-110 Special requirements for issuance of specific licenses for source material milling. In addition to the requirements set forth in WAC 246-235-020, the department will issue a specific license for source material milling when the applicant submits a satisfactory application and meets the other conditions specified below:

(1) An application for a license to receive title to, receive, possess, and use source material for milling or byproduct material as defined in WAC 246-220-010 shall address the following:

(a) Description of the proposed project or action.

(b) Area/site characteristics including geology, demography, topography, hydrology and meteorology.

(c) Radiological and nonradiological impacts of the proposed project or action, including waterway and ground water impacts.

(d) Environmental effects of accidents.

(e) Tailings disposal and decommissioning.

(f) Site and project alternatives.

(g) Description of how the provisions of chapter 246-252 WAC shall be met.

(2) Under WAC 246-235-086, the applicant shall not commence construction of the project until the department

has weighed the environmental, economic, technical, and other benefits against the environmental costs and has concluded that the issuance of the license is appropriate.

(3) Prior to issuance of a license, the department shall hold a public hearing. The hearing will address the adequacy of the reclamation, disposal, decommissioning, and decontamination plans.

(4) At least one full year prior to any major site construction, a preoperational monitoring program shall be conducted to provide complete baseline data on a milling site and its environs. Throughout the construction and operating phases of the mill, an operational monitoring program shall be conducted to measure or evaluate compliance with applicable standards and regulations; to evaluate performance of control systems and procedures; to evaluate environmental impacts of operation; and to detect potential long-term effects.

(5) Prior to issuance of the license, the mill operator shall establish financial surety arrangements consistent with WAC 246-252-030.

(6) The applicant shall provide procedures describing the means employed to meet the following requirements during the operational phase of any project.

(a) Milling operations shall be conducted so that all effluent releases are reduced to as low as is reasonably achievable below the limits of chapter 246-221 WAC.

(b) The mill operator shall conduct at least a daily inspection of any tailings or waste retention systems. Records of these inspections shall be maintained for review by the department.

(c) The mill operator shall immediately notify the department of:

(i) Any failure in a tailings or waste retention system which results in a release of tailings or waste into unrestricted areas; and

(ii) Any unusual conditions (conditions not contemplated in the design of the retention system) which if not corrected could lead to failure of the system and result in a release of tailings or waste into unrestricted areas.

(7) An application for a license to own, receive, possess and use byproduct material as defined in WAC 246-220-010 shall contain proposed specifications relating to the emissions control and disposition of the byproduct material to achieve the requirements and objectives set forth in the criteria listed in WAC 246-252-030.

[Statutory Authority: RCW 70.98.050. 06-05-019, § 246-235-110, filed 2/6/06, effective 3/9/06. Statutory Authority: RCW 70.98.050 and 70.98.080. 91-15-112 (Order 184), § 246-235-110, filed 7/24/91, effective 8/24/91. Statutory Authority: RCW 43.70.040. 91-02-049 (Order 121), recodified as § 246-235-110, filed 12/27/90, effective 1/31/91. Statutory Authority: RCW 70.98.080. 87-01-031 (Order 2450), § 402-22-150, filed 12/11/86. Statutory Authority: Chapter 70.121 RCW. 81-16-031 (Order 1683), § 402-22-150, filed 7/28/81.]

WAC 246-235-130 Appendix—General laboratory rules for safe use of unsealed sources. (1) In addition to the requirements set forth in WAC 246-235-020, a specific licensee who uses unsealed, unplated and/or liquid sources shall possess adequate facilities including ventilation systems which are compatible with the proposed uses: and,

(2) Possess, use, and store, radioactive materials in accordance with, but not limited to, the following:

(a) Receive, handle, and store radioactive materials only at specifically designated locations within the applicant's facility. Vessels containing radioactive material must be labeled as required by chapter 246-221 WAC.

(b) Wear disposable gloves at all times when handling dispersible radioactive material or potentially contaminated items.

(c) Wear personnel monitoring devices (film badge and/or TLD), when required, at all times when working with, or in the vicinity of, radioactive materials. Extremity doses shall be considered in evaluating the need for separate extremity dosimeters. Extremity dosimetry should be worn when working with millicurie or greater quantities of material (excluding low energy beta emitters and pure alpha emitters). Monitoring devices, when not in use, shall be stored only in a designated low-background area. Calculations based on whole body badge results for photon emitters may be used in lieu of separate extremity dosimeters.

(d) Use remote tools, lead shields, lead-glass shields, and/or plexiglass shields as appropriate.

(e) Prohibit eating, chewing, drinking, smoking, and application of cosmetics in any area where radioactive material is used or stored.

(f) Do not store food, drink or personal effects in any area, container, or refrigerator designated for radioactive materials use or storage.

(g) Do not pipette radioactive materials or perform any similar operation by employing mouth suction.

(h) Use disposable absorbent material with impervious backing to cover work surfaces where spillage is possible.

(i) Properly dress and protect open wounds on exposed body surfaces before working with radioactive materials.

(j) Wear laboratory coats when working with radioactive material. Potentially contaminated laboratory coats shall not be worn outside the immediate work area.

(k) Nuclides in gaseous or volatile form, or with a high potential for volatilization shall be used only in areas with adequate ventilation systems.

[Statutory Authority: RCW 70.98.050. 94-01-073, § 246-235-130, filed 12/9/93, effective 1/9/94. Statutory Authority: RCW 70.98.050 and 70.98.080. 91-15-112 (Order 184), § 246-235-130, filed 7/24/91, effective 8/24/91. Statutory Authority: RCW 43.70.040. 91-02-049 (Order 121), recodified as § 246-235-130, filed 12/27/90, effective 1/31/91. Statutory Authority: RCW 70.98.080. 87-01-031 (Order 2450), § 402-22-240, filed 12/11/86; 83-19-050 (Order 2026), § 402-22-240, filed 9/16/83.]

WAC 246-235-140 Schedule B, limits for broad licenses. (See also WAC 246-235-090)

Radioactive Material	Col. I curies	Col. II curies
Antimony-122	1	0.01
Antimony-124	1	0.01
Antimony-125	1	0.01
Arsenic-73	10	0.1
Arsenic-74	1	0.01
Arsenic-76	1	0.01
Arsenic-77	10	0.1
Barium-131	10	0.1
Barium-140	1	0.01
Beryllium-7	10	0.1
Bismuth-210	0.1	0.001

Radioactive Material	Col. I curies	Col. II curies
Bromine-82	10	0.1
Cadmium-109	1	0.01
Cadmium-115m	1	0.01
Cadmium-115	10	0.1
Calcium-45	1	0.01
Calcium-47	10	0.1
Carbon-14	100	1.
Cerium-141	10	0.1
Cerium-143	10	0.1
Cerium-144	0.1	0.001
Cesium-131	100	1.
Cesium-134m	100	1.
Cesium-134	0.1	0.001
Cesium-135	1	0.01
Cesium-136	10	0.1
Cesium-137	0.1	0.001
Chlorine-36	1	0.01
Chlorine-38	100	1.
Chromium-51	100	1.
Cobalt-57	10	0.1
Cobalt-58m	100	1.
Cobalt-58	1	0.01
Cobalt-60	0.1	0.001
Copper-64	10	0.1
Dysprosium-165	100	1.
Dysprosium-166	10	0.1
Erbium-169	10	0.1
Erbium-171	10	0.1
Europium-152 (9.2h)	10	0.1
Europium-152 (13 y)	0.1	0.001
Europium-154	0.1	0.001
Europium-155	1	0.01
Fluorine-18	100	1.
Gadolinium-153	1	0.01
Gadolinium-159	10	0.1
Gallium-72	10	0.1
Germanium-71	100	1.
Gold-198	10	0.1
Gold-199	10	0.1
Hafnium-181	1	0.01
Holmium-166	10	0.1
Hydrogen-3	100	1.
Indium-113m	100	1.
Indium-114m	1	0.01
Indium-115m	100	1.
Indium-115	1	0.01
Iodine-125	0.1	0.001
Iodine-126	0.1	0.001
Iodine-129	0.1	0.001
Iodine-131	0.1	0.001
Iodine-132	10	0.1
Iodine-133	1	0.01
Iodine-134	10	0.1
Iodine-135	1	0.01
Iridium-192	1	0.01
Iridium-194	10	0.1
Iron-55	10	0.1
Iron-59	1	0.01
Krypton-85	100	1.
Krypton-87	10	0.1
Lanthanum-140	1	0.01
Lutetium-177	10	0.1
Manganese-52	1	0.01
Manganese-54	1	0.01
Manganese-56	10	0.1
Mercury-197m	10	0.1
Mercury-197	10	0.1
Mercury-203	1	0.01
Molybdenum-99	10	0.1
Neodymium-147	10	0.1
Neodymium-149	10	0.1
Nickel-59	10	0.1
Nickel-63	1	0.01
Nickel-65	10	0.1
Niobium-93m	1	0.01
Niobium-95	1	0.01
Niobium-97	100	1.
Osmium-185	1	0.01
Osmium-191m	100	1.
Osmium-191	10	0.1
Osmium-193	10	0.1
Palladium-103	10	0.1
Palladium-109	10	0.1
Phosphorus-32	1	0.01
Platinum-191	10	0.1
Platinum-193m	100	1.
Platinum-193	10	0.1
Platinum-197m	100	1.
Platinum-197	10	0.1
Polonium-210	0.01	0.0001
Potassium-42	1	0.01
Praseodymium-142	10	0.1
Praseodymium-143	10	0.1
Promethium-147	1	0.01
Promethium-149	10	0.1
Radium-226	0.01	0.0001
Rhenium-186	10	0.1
Rhenium-188	10	0.1
Rhodium-103m	1,000	10.
Rhodium-105	10	0.1
Rubidium-86	1	0.01
Rubidium-87	1	0.01
Ruthenium-97	100	1.
Ruthenium-103	1	0.01
Ruthenium-105	10	0.1
Ruthenium-106	0.1	0.001
Samarium-151	1	0.01
Samarium-153	10	0.1
Scandium-46	1	0.01
Scandium-47	10	0.1
Scandium-48	1	0.01
Selenium-75	1	0.01
Silicon-31	10	0.1
Silver-105	1	0.01
Silver-110m	0.1	0.001
Silver-111	10	0.1
Sodium-22	0.1	0.001
Sodium-24	1	0.01

Radioactive Material	Col. I curies	Col. II curies
Strontium-85m	1,000	10.
Strontium-85	1	0.01
Strontium-89	1	0.01
Strontium-90	0.01	0.0001
Strontium-91	10	0.1
Strontium-92	10	0.1
Sulphur-35	10	0.1
Tantalum-182	1	0.01
Technetium-96	10	0.1
Technetium-97m	10	0.1
Technetium-97	10	0.1
Technetium-99m	100	1.
Technetium-99	1	0.01
Tellurium-125m	1	0.01
Tellurium-127m	1	0.01
Tellurium-127	10	0.1
Tellurium-129m	1	0.01
Tellurium-129	100	1.
Tellurium-131m	10	0.1
Tellurium-132	1	0.01
Terbium-160	1	0.01
Thallium-200	10	0.1
Thallium-201	10	0.1
Thallium-202	10	0.1
Thallium-204	1	0.01
Thulium-170	1	0.01
Thulium-171	1	0.01
Tin-113	1	0.01
Tin-125	1	0.01
Tungsten-181	1	0.01
Tungsten-185	1	0.01
Tungsten-187	10	0.1
Vanadium-48	1	0.01
Xenon-131m	1,000	10.
Xenon-133	100	1.
Xenon-135	100	1.
Ytterbium-175	10	0.1
Yttrium-90	1	0.01
Yttrium-91	1	0.01
Yttrium-92	10	0.1
Yttrium-93	1	0.01
Zinc-65	1	0.01
Zinc-69m	10	0.1
Zinc-69	100	1.
Zirconium-93	1	0.01
Zirconium-95	1	0.01
Zirconium-97	1	0.01
Any radioactive material other than source material, special nuclear material, or alpha emitting radioactive material not listed above.	0.1	0.001

[Statutory Authority: RCW 70.98.050 and 70.98.080. 91-15-112 (Order 184), § 246-235-140, filed 7/24/91, effective 8/24/91. Statutory Authority: RCW 43.70.040. 91-02-049 (Order 121), recodified as § 246-235-140, filed 12/27/90, effective 1/31/91. Statutory Authority: RCW 70.98.080. 79-12-073 (Order 1459), § 402-22-250, filed 11/30/79, effective 1/1/80. Formerly WAC 402-20-270.]

WAC 246-235-150 Schedule C—Quantities of radioactive materials requiring consideration of the need for an emergency plan for responding to a release.

Radioactive material[1]	Release fraction	Possession limit (curies)
Actinium-228	0.001	4,000
Americium-241	.001	2
Americium-242	.001	2
Americium-243	.001	2
Antimony-124	.01	4,000
Antimony-126	.01	6,000
Barium-133	.01	10,000
Barium-140	.01	30,000
Bismuth-207	.01	5,000
Bismuth-210	.01	600
Cadmium-109	.01	1,000
Cadmium-113	.01	80
Calcium-45	.01	20,000
Californium-252[2]	.001	9
Carbon-14[3]	.01	50,000
Cerium-141	.01	10,000
Cerium-144	.01	300
Cesium-134	.01	2,000
Cesium-137	.01	3,000
Chlorine-36	.5	100
Chromium-51	.01	300,000
Cobalt-60	.001	5,000
Copper-64	.01	200,000
Curium-242	.001	60
Curium-243	.001	3
Curium-244	.001	4
Curium-245	.001	2
Europium-152	.01	500
Europium-154	.01	400
Europium-155	.01	3,000
Germanium-68	.01	2,000
Gadolinium-153	.01	5,000
Gold-198	.01	30,000
Hafnium-172	.01	400
Hafnium-181	.01	7,000
Holmium-166m	.01	100
Hydrogen-3	.5	20,000
Iodine-125	.5	10
Iodine-131	.5	10
Indium-114m	.01	1,000
Iridium-192	.001	40,000
Iron-55	.01	40,000
Iron-59	.01	7,000
Krypton-85	1.0	6,000,000
Lead-210	.01	8
Manganese-56	.01	60,000
Mercury-203	.01	10,000
Molybdenum-99	.01	30,000
Neptunium-237	.001	2
Nickel-63	.01	20,000
Niobium-94	.01	300
Phosphorus-32	.5	100
Phosphorus-33	.5	1,000
Polonium-210	.01	10
Potassium-42	.01	9,000

Radioactive material[1]	Release fraction	Possession limit (curies)
Promethium-145	.01	4,000
Promethium-147	.01	4,000
Ruthenium-106	.01	200
Samarium-151	.01	4,000
Scandium-46	.01	3,000
Selenium-75	.01	10,000
Silver-110m	.01	1,000
Sodium-22	.01	9,000
Sodium-24	.01	10,000
Strontium-89	.01	3,000
Strontium-90	.01	90
Sulfur-35	.5	900
Technetium-99	.01	10,000
Technetium-99m	.01	400,000
Tellurium-127m	.01	5,000
Tellurium-129m	.01	5,000
Terbium-160	.01	4,000
Thulium-170	.01	4,000
Tin-113	.01	10,000
Tin-123	.01	3,000
Tin-126	.01	1,000
Titanium-44	.01	100
Uranium Hexafluoride	.001	Note[4]
Vanadium-48	.01	7,000
Xenon-133	1.0	900,000
Yttrium-91	.01	2,000
Zinc-65	.01	5,000
Zirconium-93	.01	400
Zirconium-95	.01	5,000
Any other beta-gamma emitter	.01	10,000
Mixed fission products	.01	1,000
Mixed corrosion products	.01	10,000
Contaminated equipment beta-gamma	.001	10,000
Irradiated material, any form other than solid non-combustible	.01	1,000
Irradiated material, solid noncombustible	.001	10,000
Mixed radioactive waste, beta-gamma	.01	1,000
Packaged mixed waste, beta-gamma[5]	.001	10,000
Any other alpha emitter	.001	2
Contaminated equipment, alpha	.0001	20
Packaged waste, alpha[5]	.0001	20
Combinations of radioactive materials listed above[1]		

1 For combinations of radioactive materials, consideration of the need for an emergency plan is required if the sum of the ratios of the quantity of each radioactive material authorized to the quantity listed for that material in Schedule C exceeds one.

2 For Californium-252, the quantity may also be expressed as 20 milligrams.

3 Excludes Carbon-14 as carbon dioxide.

4 For uranium hexafluoride, the quantity is 50 kilograms in a single container or 1,000 kilograms total.

5 Waste packaged in Type B containers does not require an emergency plan.

[Statutory Authority: RCW 70.98.050. 95-01-108, § 246-235-150, filed 12/21/94, effective 1/21/95.]

Chapter 246-239 WAC

RADIATION PROTECTION FOR SUBSEQUENT USE

WAC

246-239-900 Directive.

DISPOSITION OF SECTIONS FORMERLY CODIFIED IN THIS CHAPTER

246-239-001 Purpose and scope. [Statutory Authority: RCW 43.70.-040. 91-02-049 (Order 121), recodified as § 246-239-001, filed 12/27/90, effective 1/31/91. Statutory Authority: RCW 70.98.080. 83-19-050 (Order 2026), § 402-34-010, filed 9/16/83.] Repealed by 06-05-019, filed 2/6/06, effective 3/9/06. Statutory Authority: RCW 70.98.050.

246-239-010 Definitions. [Statutory Authority: RCW 70.98.050. 98-13-037, § 246-239-010, filed 6/8/98, effective 7/9/98. Statutory Authority: RCW 70.98.050 and 70.98.080. 92-06-008 (Order 245), § 246-239-010, filed 2/21/92, effective 3/23/92; 91-15-112 (Order 184), § 246-239-010, filed 7/24/91, effective 8/24/91. Statutory Authority: RCW 43.70.040. 91-02-049 (Order 121), recodified as § 246-239-010, filed 12/27/90, effective 1/31/91. Statutory Authority: RCW 70.98.080. 83-19-050 (Order 2026), § 402-34-030, filed 9/16/83.] Repealed by 06-05-019, filed 2/6/06, effective 3/9/06. Statutory Authority: RCW 70.98.050.

246-239-020 Radiation safety committee. [Statutory Authority: RCW 70.98.050. 94-06-017, § 246-239-020, filed 2/22/94, effective 3/25/94. Statutory Authority: RCW 70.98.050 and 70.98.080. 91-15-112 (Order 184), § 246-239-020, filed 7/24/91, effective 8/24/91. Statutory Authority: RCW 43.70.040. 91-02-049 (Order 121), recodified as § 246-239-020, filed 12/27/90, effective 1/31/91. Statutory Authority: RCW 70.98.080. 83-19-050 (Order 2026), § 402-34-050, filed 9/16/83.] Repealed by 06-05-019, filed 2/6/06, effective 3/9/06. Statutory Authority: RCW 70.98.050.

246-239-022 Policy and procedures for radiopharmaceutical administration. [Statutory Authority: RCW 70.98.050. 98-13-037, § 246-239-022, filed 6/8/98, effective 7/9/98; 94-06-017, § 246-239-022, filed 2/22/94, effective 3/25/94.] Repealed by 06-05-019, filed 2/6/06, effective 3/9/06. Statutory Authority: RCW 70.98.050.

246-239-025 Notifications, records, and reports of radiopharmaceutical misadministrations. [Statutory Authority: RCW 70.98.050. 98-13-037, § 246-239-025, filed 6/8/98, effective 7/9/98. Statutory Authority: RCW 70.98.050 and 70.98.080. 92-06-008 (Order 245), § 246-239-025, filed 2/21/92, effective 3/23/92.] Repealed by 06-05-019, filed 2/6/06, effective 3/9/06. Statutory Authority: RCW 70.98.050.

246-239-030 Personnel monitoring. [Statutory Authority: RCW 70.98.050. 94-06-017, § 246-239-030, filed 2/22/94, effective 3/25/94. Statutory Authority: RCW 70.98.050 and 70.98.080. 91-15-112 (Order 184), § 246-239-030, filed 7/24/91, effective 8/24/91. Statutory Authority: RCW 43.70.040. 91-02-049 (Order 121), recodified as § 246-239-030, filed 12/27/90, effective 1/31/91. Statutory Authority: RCW 70.98.080. 83-19-050 (Order 2026), § 402-34-090, filed 9/16/83.] Repealed by 06-05-019, filed 2/6/06, effective 3/9/06. Statutory Authority: RCW 70.98.050.

246-239-035 Bioassay. [Statutory Authority: RCW 70.98.050. 94-06-017, § 246-239-035, filed 2/22/94, effective 3/25/94.] Repealed by 06-05-019, filed 2/6/06, effective 3/9/06. Statutory Authority: RCW 70.98.050.

246-239-040 Radiopharmaceuticals. [Statutory Authority: RCW 70.98.050. 98-13-037, § 246-239-040, filed 6/8/98, effective 7/9/98. Statutory Authority: RCW 70.98.050 and 70.98.080. 91-15-112 (Order 184), § 246-239-040, filed 7/24/91, effective 8/24/91. Statutory Authority: RCW 43.70.040. 91-02-049 (Order 121), recodified as § 246-239-040, filed 12/27/90, effective 1/31/91. Statu-

tory Authority: RCW 70.98.080. 83-19-050 (Order 2026), § 402-34-100, filed 9/16/83.] Repealed by 06-05-019, filed 2/6/06, effective 3/9/06. Statutory Authority: RCW 70.98.050.

246-239-050 Radionuclide generators. [Statutory Authority: RCW 70.98.050. 94-06-017, § 246-239-050, filed 2/22/94, effective 3/25/94. Statutory Authority: RCW 43.70.-040. 91-02-049 (Order 121), recodified as § 246-239-050, filed 12/27/90, effective 1/31/91. Statutory Authority: RCW 70.98.080. 83-19-050 (Order 2026), § 402-34-120, filed 9/16/83.] Repealed by 06-05-019, filed 2/6/06, effective 3/9/06. Statutory Authority: RCW 70.98.050.

246-239-055 Release of individuals containing radiopharmaceuticals. [Statutory Authority: RCW 70.98.050. 98-13-037, § 246-239-055, filed 6/8/98, effective 7/9/98.] Repealed by 06-05-019, filed 2/6/06, effective 3/9/06. Statutory Authority: RCW 70.98.050.

246-239-060 Laboratory safety. [Statutory Authority: RCW 70.98.-050 and 70.98.080. 91-15-112 (Order 184), § 246-239-060, filed 7/24/91, effective 8/24/91. Statutory Authority: RCW 43.70.040. 91-02-049 (Order 121), recodified as § 246-239-060, filed 12/27/90, effective 1/31/91. Statutory Authority: RCW 70.98.080. 87-01-031 (Order 2450), § 402-34-140, filed 12/11/86; 83-19-050 (Order 2026), § 402-34-140, filed 9/16/83.] Repealed by 06-05-019, filed 2/6/06, effective 3/9/06. Statutory Authority: RCW 70.98.050.

246-239-070 Surveys. [Statutory Authority: RCW 70.98.050. 94-06-017, § 246-239-070, filed 2/22/94, effective 3/25/94. Statutory Authority: RCW 43.70.040. 91-02-049 (Order 121), recodified as § 246-239-070, filed 12/27/90, effective 1/31/91. Statutory Authority: RCW 70.98.080. 83-19-050 (Order 2026), § 402-34-150, filed 9/16/83.] Repealed by 06-05-019, filed 2/6/06, effective 3/9/06. Statutory Authority: RCW 70.98.050.

246-239-080 Calibration and reference sources. [Statutory Authority: RCW 70.98.050. 04-04-055, § 246-239-080, filed 1/30/04, effective 3/1/04; 94-06-017, § 246-239-080, filed 2/22/94, effective 3/25/94. Statutory Authority: RCW 70.98.050 and 70.98.080. 91-15-112 (Order 184), § 246-239-080, filed 7/24/91, effective 8/24/91. Statutory Authority: RCW 43.70.040. 91-02-049 (Order 121), recodified as § 246-239-080, filed 12/27/90, effective 1/31/91. Statutory Authority: RCW 70.98.080. 83-19-050 (Order 2026), § 402-34-170, filed 9/16/83.] Repealed by 06-05-019, filed 2/6/06, effective 3/9/06. Statutory Authority: RCW 70.98.050.

246-239-090 Instrumentation. [Statutory Authority: RCW 70.98.050. 94-06-017, § 246-239-090, filed 2/22/94, effective 3/25/94. Statutory Authority: RCW 70.98.050 and 70.98.080. 91-15-112 (Order 184), § 246-239-090, filed 7/24/91, effective 8/24/91. Statutory Authority: RCW 43.70.040. 91-02-049 (Order 121), recodified as § 246-239-090, filed 12/27/90, effective 1/31/91. Statutory Authority: RCW 70.98.080. 83-19-050 (Order 2026), § 402-34-190, filed 9/16/83.] Repealed by 06-05-019, filed 2/6/06, effective 3/9/06. Statutory Authority: RCW 70.98.050.

246-239-100 Radioactive gases. [Statutory Authority: RCW 70.98.-050. 94-06-017, § 246-239-100, filed 2/22/94, effective 3/25/94. Statutory Authority: RCW 70.98.050 and 70.98.080. 91-15-112 (Order 184), § 246-239-100, filed 7/24/91, effective 8/24/91. Statutory Authority: RCW 43.70.040. 91-02-049 (Order 121), recodified as § 246-239-100, filed 12/27/90, effective 1/31/91. Statutory Authority: RCW 70.98.080. 87-01-031 (Order 2450), § 402-34-210, filed 12/11/86; 83-19-050 (Order 2026), § 402-34-210, filed 9/16/83.] Repealed by 06-05-019, filed 2/6/06, effective 3/9/06. Statutory Authority: RCW 70.98.050.

WAC 246-239-900 Directive. The licensee/reader, looking for nuclear medicine regulations formerly located in chapter 246-239 WAC, "Radiation protection—Nuclear medicine" is directed to the updated nuclear medicine regulations that are now contained entirely within chapter 246-240 WAC, "Radiation protection—Medical use of radioactive material."

[Statutory Authority: RCW 70.98.050. 06-05-019, § 246-239-900, filed 2/6/06, effective 3/9/06.]

Chapter 246-240 WAC

RADIATION PROTECTION—MEDICAL USE OF RADIOACTIVE MATERIAL

WAC

246-240-001 Purpose and scope.
246-240-004 Other federal and state requirements.
246-240-007 Provisions for the protection of human research subjects.
246-240-010 Definitions.
246-240-013 Maintenance of records.
246-240-016 License required.
246-240-019 Application for license, amendment, or renewal.
246-240-022 License amendments.
246-240-025 Notifications.
246-240-028 Exemptions regarding Type A specific licenses of broad scope.
246-240-031 License issuance and specific exemptions.
246-240-051 Authority and responsibilities for the radiation protection program.
246-240-054 Radiation protection program changes.
246-240-057 Supervision.
246-240-060 Written directives.
246-240-063 Procedures for administrations requiring a written directive.
246-240-066 Suppliers for sealed sources or devices for medical use.
246-240-069 Training for radiation safety officer.
246-240-072 Training for an authorized medical physicist.
246-240-075 Training for an authorized nuclear pharmacist.
246-240-078 Training for experienced radiation safety officer, teletherapy or medical physicist, authorized user, and nuclear pharmacist.
246-240-081 Recentness of training.
246-240-101 Possession, use, and calibration of instruments used to measure the activity of unsealed radioactive material.
246-240-104 Calibration of survey instruments.
246-240-107 Determination of dosages of unsealed radioactive material for medical use.
246-240-110 Authorization for calibration, transmission, and reference sources.
246-240-113 Requirements for possession of sealed sources and brachytherapy sources.
246-240-116 Labeling of vials and syringes.
246-240-119 Surveys of ambient radiation exposure rate.
246-240-122 Release of individuals containing unsealed radioactive material or implants containing radioactive material.
246-240-125 Provision of mobile medical service.
246-240-128 Decay-in-storage.
246-240-151 Use of unsealed radioactive material for uptake, dilution, and excretion studies for which a written directive is not required.
246-240-154 Training for uptake, dilution, and excretion studies.
246-240-157 Use of unsealed radioactive material for imaging and localization studies for which a written directive is not required.
246-240-160 Permissible molybdenum-99 concentration.
246-240-163 Training for imaging and localization studies.
246-240-201 Use of unsealed radioactive material for which a written directive is required.
246-240-204 Safety instruction.
246-240-207 Safety precautions.
246-240-210 Training for use of unsealed radioactive material for which a written directive is required.
246-240-213 Training for the oral administration of sodium iodide I-131 requiring a written directive in quantities less than or equal to 1.22 gigabecquerels (33 millicuries).
246-240-216 Training for the oral administration of sodium iodide I-131 requiring a written directive in quantities greater than 1.22 gigabecquerels (33 millicuries).
246-240-219 Training for the parenteral administration of unsealed radioactive material requiring a written directive.
246-240-251 Use of sources for manual brachytherapy.
246-240-254 Surveys after source implant and removal.
246-240-260 Brachytherapy source accountability.
246-240-263 Safety instruction.

246-240-266 Safety precautions.
246-240-269 Calibration measurements of brachytherapy sources.
246-240-272 Decay of strontium-90 sources for ophthalmic treatments.
246-240-275 Therapy-related computer systems.
246-240-278 Training for use of manual brachytherapy sources.
246-240-281 Training for ophthalmic use of strontium-90.
246-240-301 Use of sealed sources for diagnosis.
246-240-304 Training for use of sealed sources for diagnosis.
246-240-351 Use of a sealed source in a remote afterloader unit, teletherapy unit, or gamma stereotactic radiosurgery unit.
246-240-354 Surveys of patients and human research subjects treated with a remote afterloader unit.
246-240-357 Installation, maintenance, adjustment, and repair.
246-240-360 Safety procedures and instructions for remote afterloader units, teletherapy units, and gamma stereotactic radiosurgery units.
246-240-363 Safety precautions for remote afterloader units, teletherapy units, and gamma stereotactic radiosurgery units.
246-240-366 Dosimetry equipment.
246-240-369 Full calibration measurements on teletherapy units.
246-240-372 Full calibration measurements on remote afterloader units.
246-240-375 Full calibration measurements on gamma stereotactic radiosurgery units.
246-240-378 Periodic spot-checks for teletherapy units.
246-240-381 Periodic spot-checks for remote afterloader units.
246-240-384 Periodic spot-checks for gamma stereotactic radiosurgery units.
246-240-387 Additional technical requirements for mobile remote afterloader units.
246-240-390 Radiation surveys.
246-240-393 Five-year inspection for teletherapy and gamma stereotactic radiosurgery units.
246-240-396 Therapy-related computer systems.
246-240-399 Training for use of remote afterloader units, teletherapy units, and gamma stereotactic radiosurgery units.
246-240-501 Other medical uses of radioactive material or radiation from radioactive material.
246-240-551 Records of authority and responsibilities for radiation protection programs.
246-240-554 Records of radiation protection program changes.
246-240-557 Records of written directives.
246-240-560 Records for procedures for administrations requiring a written directive.
246-240-563 Records of calibrations of instruments used to measure the activity of unsealed radioactive material.
246-240-566 Records of radiation survey instrument calibrations.
246-240-569 Records of dosages of unsealed radioactive material for medical use.
246-240-572 Records of leak tests and inventory of sealed sources and brachytherapy sources.
246-240-575 Records of surveys for ambient radiation exposure rate.
246-240-578 Records of the release of individuals containing unsealed radioactive material or implants containing radioactive material.
246-240-581 Records of mobile medical services.
246-240-584 Records of decay-in-storage.
246-240-587 Records of molybdenum-99 concentrations.
246-240-590 Records of safety instruction.
246-240-593 Records of surveys after source implant and removal.
246-240-596 Records of brachytherapy source accountability.
246-240-599 Records of calibration measurements of brachytherapy sources.
246-240-602 Records of decay of strontium-90 sources for ophthalmic treatments.
246-240-605 Records of installation, maintenance, adjustment, and repair of remote afterloader units, teletherapy units, and gamma stereotactic radiosurgery units.
246-240-608 Records of safety procedures.
246-240-611 Records of dosimetry equipment used with remote afterloader units, teletherapy units, and gamma stereotactic radiosurgery units.
246-240-614 Records of teletherapy, remote afterloader, and gamma stereotactic radiosurgery full calibrations.
246-240-617 Records of periodic spot-checks for teletherapy units.
246-240-620 Records of periodic spot-checks for remote afterloader units.
246-240-623 Records of periodic spot-checks for gamma stereotactic radiosurgery units.
246-240-626 Records of additional technical requirements for mobile remote afterloader units.
246-240-629 Records of surveys of therapeutic treatment units.
246-240-632 Records of five-year inspection for teletherapy and gamma stereotactic radiosurgery units.
246-240-651 Report and notification of a medical event.
246-240-654 Report and notification of a dose to an embryo/fetus or a nursing child.
246-240-657 Report of a leaking source.

DISPOSITION OF SECTIONS FORMERLY CODIFIED IN THIS CHAPTER

246-240-015 Policy and procedures for therapy administration. [Statutory Authority: RCW 70.98.050. 98-13-037, § 246-240-015, filed 6/8/98, effective 7/9/98; 95-01-108, § 246-240-015, filed 12/21/94, effective 1/21/95.] Repealed by 06-05-019, filed 2/6/06, effective 3/9/06. Statutory Authority: RCW 70.98.050.

246-240-020 Interstitial, intracavitary and superficial applications. [Statutory Authority: RCW 70.98.050. 98-13-037, § 246-240-020, filed 6/8/98, effective 7/9/98; 94-06-017, § 246-240-020, filed 2/22/94, effective 3/25/94. Statutory Authority: RCW 70.98.050 and 70.98.080. 91-15-112 (Order 184), § 246-240-020, filed 7/24/91, effective 8/24/91. Statutory Authority: RCW 43.70.040. 91-02-049 (Order 121), recodified as § 246-240-020, filed 12/27/90, effective 1/31/91. Statutory Authority: RCW 70.98.080. 87-01-031 (Order 2450), § 402-32-020, filed 12/11/86; 83-19-050 (Order 2026), § 402-32-020, filed 9/16/83. Statutory Authority: RCW 70.98.050. 81-01-011 (Order 1570), § 402-32-020, filed 12/8/80; Order 1084, § 402-32-020, filed 1/14/76; Order 1, § 402-32-020, filed 1/8/69; Rules (part), filed 10/26/66.] Repealed by 06-05-019, filed 2/6/06, effective 3/9/06. Statutory Authority: RCW 70.98.050.

246-240-030 Teletherapy. [Statutory Authority: RCW 70.98.050 and 70.98.080. 91-15-112 (Order 184), § 246-240-030, filed 7/24/91, effective 8/24/91. Statutory Authority: RCW 43.70.040. 91-02-049 (Order 121), recodified as § 246-240-030, filed 12/27/90, effective 1/31/91. Statutory Authority: RCW 70.98.080. 83-19-050 (Order 2026), § 402-32-030, filed 9/16/83. Statutory Authority: RCW 70.98.050. 81-01-011 (Order 1570), § 402-32-030, filed 12/8/80; Order 1084, § 402-32-030, filed 1/14/76; Order 1, § 402-32-030, filed 1/8/69; Rules (part), filed 10/26/66.] Repealed by 06-05-019, filed 2/6/06, effective 3/9/06. Statutory Authority: RCW 70.98.050.

246-240-040 Special requirements for teletherapy licensees. [Statutory Authority: RCW 70.98.050 and 70.98.080. 91-15-112 (Order 184), § 246-240-040, filed 7/24/91, effective 8/24/91. Statutory Authority: RCW 43.70.040. 91-02-049 (Order 121), recodified as § 246-240-040, filed 12/27/90, effective 1/31/91. Statutory Authority: RCW 70.98.080. 87-01-031 (Order 2450), § 402-32-100, filed 12/11/86; 83-19-050 (Order 2026), § 402-32-100, filed 9/16/83. Statutory Authority: RCW 70.98.050. 81-01-011 (Order 1570), § 402-32-100, filed 12/8/80.] Repealed by 06-05-019, filed 2/6/06, effective 3/9/06. Statutory Authority: RCW 70.98.050.

246-240-050 Notifications, records, and reports of therapy misadministrations. [Statutory Authority: RCW 70.98.050. 98-13-037, § 246-240-050, filed 6/8/98, effective 7/9/98. Statutory Authority: RCW 70.98.050 and 70.98.080. 92-06-008 (Order 245), § 246-240-050, filed 2/21/92, effective 3/23/92.] Repealed by 06-05-019, filed 2/6/06, effective 3/9/06. Statutory Authority: RCW 70.98.050.

246-240-451 Radiation safety officer. [Statutory Authority: RCW 70.98.050. 06-05-019, § 246-240-451, filed 2/6/06, effective 3/9/06.] Repealed by 07-14-131, filed 7/3/07, effective 8/3/07. Statutory Authority: RCW 70.98.050.

246-240-454 Training for uptake, dilution, and excretion studies. [Statutory Authority: RCW 70.98.050. 06-05-019, § 246-240-454, filed 2/6/06, effective 3/9/06.] Repealed by 07-14-131, filed 7/3/07, effective 8/3/07. Statutory Authority: RCW 70.98.050.

246-240-457 Training for imaging and localization studies. [Statutory Authority: RCW 70.98.050. 06-05-019, § 246-240-457, filed 2/6/06, effective 3/9/06.] Repealed by 07-14-131, filed 7/3/07, effective 8/3/07. Statutory Authority: RCW 70.98.050.

246-240-460 Training for therapeutic use of unsealed radioactive material. [Statutory Authority: RCW 70.98.050. 06-05-019, § 246-240-460, filed 2/6/06, effective 3/9/06.] Repealed by 07-14-131, filed 7/3/07, effective 8/3/07. Statutory Authority: RCW 70.98.050.

246-240-463 Training for treatment of hyperthyroidism. [Statutory Authority: RCW 70.98.050. 06-05-019, § 246-240-463, filed 2/6/06, effective 3/9/06.] Repealed by 07-14-131, filed 7/3/07, effective 8/3/07. Statutory Authority: RCW 70.98.050.

246-240-466 Training for treatment of thyroid carcinoma. [Statutory Authority: RCW 70.98.050. 06-05-019, § 246-240-466, filed 2/6/06, effective 3/9/06.] Repealed by 07-14-131, filed 7/3/07, effective 8/3/07. Statutory Authority: RCW 70.98.050.

246-240-469 Training for use of brachytherapy sources. [Statutory Authority: RCW 70.98.050. 06-05-019, § 246-240-469, filed 2/6/06, effective 3/9/06.] Repealed by 07-14-131, filed 7/3/07, effective 8/3/07. Statutory Authority: RCW 70.98.050.

246-240-472 Training for ophthalmic use of strontium-90. [Statutory Authority: RCW 70.98.050. 06-05-019, § 246-240-472, filed 2/6/06, effective 3/9/06.] Repealed by 07-14-131, filed 7/3/07, effective 8/3/07. Statutory Authority: RCW 70.98.050.

246-240-475 Training for use of sealed sources for diagnosis. [Statutory Authority: RCW 70.98.050. 06-05-019, § 246-240-475, filed 2/6/06, effective 3/9/06.] Repealed by 07-14-131, filed 7/3/07, effective 8/3/07. Statutory Authority: RCW 70.98.050.

246-240-478 Training for use of therapeutic medical devices. [Statutory Authority: RCW 70.98.050. 06-05-019, § 246-240-478, filed 2/6/06, effective 3/9/06.] Repealed by 07-14-131, filed 7/3/07, effective 8/3/07. Statutory Authority: RCW 70.98.050.

246-240-481 Training for authorized medical physicist. [Statutory Authority: RCW 70.98.050. 06-05-019, § 246-240-481, filed 2/6/06, effective 3/9/06.] Repealed by 07-14-131, filed 7/3/07, effective 8/3/07. Statutory Authority: RCW 70.98.050.

246-240-484 Training for an authorized nuclear pharmacist. [Statutory Authority: RCW 70.98.050. 06-05-019, § 246-240-484, filed 2/6/06, effective 3/9/06.] Repealed by 07-14-131, filed 7/3/07, effective 8/3/07. Statutory Authority: RCW 70.98.050.

246-240-487 Training for experienced nuclear pharmacists. [Statutory Authority: RCW 70.98.050. 06-05-019, § 246-240-487, filed 2/6/06, effective 3/9/06.] Repealed by 07-14-131, filed 7/3/07, effective 8/3/07. Statutory Authority: RCW 70.98.050.

WAC 246-240-001 Purpose and scope. This chapter contains the requirements and provisions for the medical use of radioactive material and for issuance of specific licenses authorizing the medical use of this material. These requirements and provisions provide for the radiation safety of workers, the general public, patients, and human research subjects. The requirements and provisions of chapters 246-220, 246-221, 246-222, 246-232, 246-235, and 246-254 WAC, apply to applicants and licensees subject to this chapter unless specifically exempted. When a requirement in this chapter differs from the requirement in an existing license condition, the requirement in this chapter shall govern.

[Statutory Authority: RCW 70.98.050. 06-05-019, § 246-240-001, filed 2/6/06, effective 3/9/06. Statutory Authority: RCW 43.70.040. 91-02-049 (Order 121), recodified as § 246-240-001, filed 12/27/90, effective 1/31/91; Order 1084, § 402-32-010, filed 1/14/76; Order 1, § 402-32-010, filed 1/8/69; Rules (part), filed 10/26/66.]

WAC 246-240-004 Other federal and state requirements. Nothing in this chapter relieves the licensee from complying with applicable FDA, or other federal and state requirements governing radioactive drugs or devices.

[Statutory Authority: RCW 70.98.050. 06-05-019, § 246-240-004, filed 2/6/06, effective 3/9/06.]

WAC 246-240-007 Provisions for the protection of human research subjects. (1) A licensee may conduct research involving human research subjects only if it uses the radioactive materials specified on its license for the uses authorized on its license.

(2) If the research is conducted, funded, supported, or regulated by another federal agency that has implemented the Federal Policy for the Protection of Human Subjects (federal policy), the licensee shall, before conducting research:

(a) Obtain review and approval of the research from an "institutional review board," as defined and described in the federal policy; and

(b) Obtain "informed consent," as defined and described in the federal policy, from the human research subject.

(3) If the research will not be conducted, funded, supported, or regulated by another federal agency that has implemented the federal policy, the licensee shall, before conducting research, apply for and receive a specific amendment to its medical use license. The amendment request must include a written commitment that the licensee will, before conducting research:

(a) Obtain review and approval of the research from an "institutional review board," as defined and described in the federal policy; and

(b) Obtain "informed consent," as defined and described in the federal policy, from the human research subject.

(4) Nothing in this section relieves licensees from complying with the other requirements in this chapter.

[Statutory Authority: RCW 70.98.050. 06-05-019, § 246-240-007, filed 2/6/06, effective 3/9/06.]

WAC 246-240-010 Definitions. Address of use means the building or buildings that are identified on the license and where radioactive material may be received, prepared, used, or stored.

Area of use means a portion of an address of use that has been set aside for the purpose of receiving, preparing, using, or storing radioactive material.

Authorized medical physicist means an individual who:

(1) Meets the requirements in WAC 246-240-072 and 246-240-081; or

(2) Is identified as an authorized medical physicist or teletherapy physicist on:

(a) A specific medical use license issued by the department, the U.S. Nuclear Regulatory Commission or an agreement state;

(b) A medical use permit issued by a U.S. NRC master material licensee;

(c) A permit issued by a U.S. NRC or agreement state broad scope medical use licensee; or

(d) A permit issued by a U.S. NRC master material license broad scope medical use permittee.

Authorized nuclear pharmacist means a pharmacist who:

(1) Meets the requirements in WAC 246-240-075 and 246-240-081; or

(2) Is identified as an authorized nuclear pharmacist on:

(a) A specific license issued by the department, the U.S. NRC or an agreement state, that authorizes medical use or the practice of nuclear pharmacy;

(b) A permit issued by a U.S. NRC master material licensee that authorizes medical use or the practice of nuclear pharmacy;

(c) A permit issued by a U.S. NRC or agreement state broad scope medical use licensee that authorizes medical use or the practice of nuclear pharmacy; or

(d) A permit issued by a U.S. NRC master material license broad scope medical use permittee that authorizes medical use or the practice of nuclear pharmacy; or

(3) Is identified as an authorized nuclear pharmacist by a commercial nuclear pharmacy that has been authorized to identify authorized nuclear pharmacists; or

(4) Is designated as an authorized nuclear pharmacist in accordance with WAC 246-235-100(2).

Authorized user means a physician, dentist, or podiatrist who:

(1) Meets the requirements in WAC 246-240-081 and 246-240-154, 246-240-163, 246-240-210, 246-240-213, 246-240-216, 246-240-278, 246-240-301, or 246-240-399; or

(2) Is identified as an authorized user on:

(a) A department, U.S. NRC, or agreement state license that authorizes the medical use of radioactive material;

(b) A permit issued by a U.S. NRC master material licensee that is authorized to permit the medical use of radioactive material;

(c) A permit issued by a department, U.S. NRC, or agreement state specific licensee of broad scope that is authorized to permit the medical use of radioactive material; or

(d) A permit issued by a U.S. NRC master material license broad scope permittee that is authorized to permit the medical use of radioactive material.

Brachytherapy means a method of radiation therapy in which sources are used to deliver a radiation dose at a distance of up to a few centimeters by surface, intracavitary, intraluminal, or interstitial application.

Brachytherapy source means a radioactive source or a manufacturer-assembled source train or a combination of these sources that is designed to deliver a therapeutic dose within a distance of a few centimeters.

Client's address means the area of use or a temporary job site for the purpose of providing mobile medical service in accordance with WAC 246-240-125.

Dedicated check source means a radioactive source that is used to assure the constant operation of a radiation detection or measurement device over several months or years.

Dentist means an individual licensed by a state or territory of the United States, the District of Columbia, or the Commonwealth of Puerto Rico to practice dentistry.

High dose-rate remote afterloader, as used in this chapter, means a brachytherapy device that remotely delivers a dose rate in excess of 12 gray (1200 rads) per hour at the point or surface where the dose is prescribed.

Low dose-rate remote afterloader, as used in this chapter, means a brachytherapy device that remotely delivers a dose rate of less than or equal to 2 gray (200 rads) per hour at the point or surface where the dose is prescribed.

Management means the chief executive officer or other individual having the authority to manage, direct, or administer the licensee's activities, or that person's delegate or delegates.

Manual brachytherapy, as used in this chapter, means a type of brachytherapy in which the brachytherapy sources (e.g., seeds, ribbons) are manually placed topically on or inserted either into the body cavities that are in close proximity to a treatment site or directly into the tissue volume.

Medical event means an event that meets the criteria in WAC 246-240-651.

Medical institution means an organization in which more than one medical discipline is practiced.

Medical use means the intentional internal or external administration of radioactive material or the radiation from radioactive material to patients or human research subjects under the supervision of an authorized user.

Medium dose-rate remote afterloader, as used in this chapter, means a brachytherapy device that remotely delivers a dose rate of greater than 2 gray (200 rads), but less than or equal to 12 grays (1200 rads) per hour at the point or surface where the dose is prescribed.

Mobile medical service means the transportation of radioactive material to and its medical use at the client's address.

Output means the exposure rate, dose rate, or a quantity related in a known manner to these rates from a brachytherapy source or a teletherapy, remote afterloader, or gamma stereotactic radiosurgery unit for a specified set of exposure conditions.

Patient intervention means actions by the patient or human research subject, whether intentional or unintentional, such as dislodging or removing treatment devices or prematurely terminating the administration.

Podiatrist means an individual licensed by a state or territory of the United States, the District of Columbia, or the Commonwealth of Puerto Rico to practice podiatry.

Preceptor means an individual who provides, directs, or verifies training and experience required for an individual to become an authorized user, an authorized medical physicist, an authorized nuclear pharmacist, or a radiation safety officer.

Prescribed dosage means the specified activity or range of activity of unsealed radioactive material as documented:

(1) In a written directive; or

(2) In accordance with the directions of the authorized user for procedures performed under WAC 246-240-151 and 246-240-157.

Prescribed dose means:

(1) For gamma stereotactic radiosurgery, the total dose as documented in the written directive;

(2) For teletherapy, the total dose and dose per fraction as documented in the written directive;

(3) For manual brachytherapy, either the total source strength and exposure time or the total dose, as documented in the written directive; or

(4) For remote brachytherapy afterloaders, the total dose and dose per fraction as documented in the written directive.

Pulsed dose-rate remote afterloader, as used in this chapter, means a special type of remote afterloading brachytherapy device that uses a single source capable of delivering dose rates in the "high dose-rate" range, but:

(1) Is approximately one-tenth of the activity of typical high dose-rate remote afterloader sources; and

(2) Is used to simulate the radiobiology of a low dose-rate treatment by inserting the source for a given fraction of each hour.

Radiation safety officer means an individual who:

(1) Meets the requirements in WAC 246-240-069 and 246-240-081; or

(2) Is identified as a radiation safety officer on a specific medical use license issued by the department prior to October 5, 2005, the U.S. NRC or an agreement state; or

(3) A medical use permit issued by a commission master material licensee.

Sealed source and device registry means the national registry that contains all the registration certificates, generated by both the U.S. NRC and the agreement states, that summarize the radiation safety information for the sealed sources and devices and describe the licensing and use conditions approved for the product.

Stereotactic radiosurgery means the use of external radiation in conjunction with a stereotactic guidance device to very precisely deliver a therapeutic dose to a tissue volume.

Structured educational program means an educational program designed to impart particular knowledge and practical education through interrelated studies and supervised training.

Teletherapy, as used in this chapter, means a method of radiation therapy in which collimated gamma rays are delivered at a distance from the patient or human research subject.

Temporary job site means a location where mobile medical services are conducted other than those location(s) of use authorized on the license.

Therapeutic dosage means a dosage of unsealed radioactive material that is intended to deliver a radiation dose to a patient or human research subject for palliative or curative treatment.

Therapeutic dose means a radiation dose delivered from a source containing radioactive material to a patient or human research subject for palliative or curative treatment.

Treatment site means the anatomical description of the tissue intended to receive a radiation dose, as described in a written directive.

Type of use means use of radioactive material under WAC 246-240-151, 246-240-157, 246-240-201, 246-240-251, 246-240-301, 246-240-351, or 246-240-501.

Unit dosage means a dosage prepared for medical use for administration as a single dosage to a patient or human research subject without any further manipulation of the dosage after it is initially prepared.

Written directive means an authorized user's written order for the administration of radioactive material or radiation from radioactive material to a specific patient or human research subject, as specified in WAC 246-240-060.

[Statutory Authority: RCW 70.98.050. 07-14-131, § 246-240-010, filed 7/3/07, effective 8/3/07; 06-05-019, § 246-240-010, filed 2/6/06, effective 3/9/06; 98-13-037, § 246-240-010, filed 6/8/98, effective 7/9/98. Statutory Authority: RCW 70.98.050 and 70.98.080. 92-06-008 (Order 245), § 246-240-010, filed 2/21/92, effective 3/23/92.]

WAC 246-240-013 Maintenance of records. Each record required by this chapter must be legible throughout the retention period specified by each department regulation. The record may be the original or a reproduced copy or a microform provided that the copy or microform is authenticated by authorized personnel and that the microform is capable of producing a clear copy throughout the required retention period. The record may also be stored in electronic media with the capability for producing legible, accurate, and complete records during the required retention period. Records such as letters, drawings, and specifications, must include all pertinent information such as stamps, initials, and signatures. The licensee shall maintain adequate safeguards against tampering with and loss of records.

[Statutory Authority: RCW 70.98.050. 06-05-019, § 246-240-013, filed 2/6/06, effective 3/9/06.]

WAC 246-240-016 License required. (1) A person may manufacture, produce, acquire, receive, possess, prepare, use, or transfer radioactive material for medical use only in accordance with a specific license issued by the department, the U.S. NRC or an agreement state, or as allowed in subsection (2)(a) or (b) of this section.

(2) A specific license is not needed for an individual who:

(a) Receives, possesses, uses, or transfers radioactive material in accordance with these rules under the supervision of an authorized user under in WAC 246-240-057, unless prohibited by license condition; or

(b) Prepares unsealed radioactive material for medical use in accordance with these rules under the supervision of an authorized nuclear pharmacist or authorized user under WAC 246-240-057, unless prohibited by license condition.

[Statutory Authority: RCW 70.98.050. 06-05-019, § 246-240-016, filed 2/6/06, effective 3/9/06.]

WAC 246-240-019 Application for license, amendment, or renewal. (1) An application must be signed by the applicant's or licensee's management.

(2) An application for a license for medical use of radioactive material as described in WAC 246-240-151, 246-240-157, 246-240-201, 246-240-251, 246-240-301, 246-240-351, and 246-240-501 must be made by:

(a) Filing the original **"Application for Radioactive Material License Medical,"** with the department that includes the facility diagram, equipment, and training and experience qualifications of the radiation safety officer, authorized user(s), authorized medical physicist(s), and authorized nuclear pharmacist(s); and

(b) Submitting applicable procedures required by WAC 246-240-360, 246-240-378, 246-240-381, and 246-240-384.

(3) A request for a license amendment or renewal must be made by:

(a) Submitting an original of either to the department:

(i) **"Application for Radioactive Material License Medical";** or

(ii) A letter requesting the amendment or renewal; and

(b) Submitting applicable procedures required by WAC 246-240-360, 246-240-378, 246-240-381, and 246-240-384.

(4) In addition to the requirements in subsections (2) and (3) of this section, an application for a license or amendment for medical use of radioactive material as described in WAC 246-240-501 must also include information regarding any

radiation safety aspects of the medical use of the material that is not addressed in this chapter.

(a) The applicant shall also provide specific information on:

(i) Radiation safety precautions and instructions;

(ii) Methodology for measurement of dosages or doses to be administered to patients or human research subjects; and

(iii) Calibration, maintenance, and repair of instruments and equipment necessary for radiation safety.

(b) The applicant or licensee shall also provide any other information requested by the department in its review of the application.

(5) An applicant that satisfies the requirements specified in WAC 246-235-090 may apply for a Type A specific license of broad scope.

[Statutory Authority: RCW 70.98.050. 06-05-019, § 246-240-019, filed 2/6/06, effective 3/9/06.]

WAC 246-240-022 License amendments. A licensee shall apply for and must receive a license amendment before the licensee:

(1) Receives, prepares, or uses radioactive material for a type of use that is permitted under this chapter, but that is not authorized on the licensee's current license issued under this chapter;

(2) Permits anyone to work as an authorized user, authorized nuclear pharmacist, or authorized medical physicist under the license, except:

(a) For an authorized user, an individual who meets the requirements in WAC 246-240-154, 246-240-163, 246-240-210, 246-240-213, 246-240-216, 246-240-278, or 246-240-399;

(b) For an authorized nuclear pharmacist, an individual who meets the requirements in WAC 246-240-075 and 246-240-081;

(c) For an authorized medical physicist, an individual who meets the requirements in WAC 246-240-072 and 246-240-081;

(d) An individual who is identified as an authorized user, an authorized nuclear pharmacist, or authorized medical physicist:

(i) On an agreement state or U.S. NRC license or other equivalent license recognized by the department that authorizes the use of radioactive material in medical use or in the practice of nuclear pharmacy; or

(ii) On a permit issued by a commission or agreement state specific license of broad scope that is authorized to permit the use of by-product material in medical use or in the practice of nuclear pharmacy;

(iii) On a permit issued by a commission master material licensee that is authorized to permit the use of by-product material in medical use or in the practice of nuclear pharmacy; or

(iv) By a commercial nuclear pharmacy that has been authorized to identify authorized nuclear pharmacists.

(3) Changes radiation safety officers, except as provided in WAC 246-240-051;

(4) Receives radioactive material in excess of the amount or in a different form, or receives a different radionuclide than is authorized on the license;

(5) Adds to or changes the areas of use identified in the application or on the license, except for areas of use where radioactive material is used only in accordance with either WAC 246-240-151 or 246-240-157;

(6) Changes the address(es) of use identified in the application or on the license; and

(7) Revises procedures required by WAC 246-240-360, 246-240-378, 246-240-381, and 246-240-384, as applicable, where the revision reduces radiation safety.

[Statutory Authority: RCW 70.98.050. 06-05-019, § 246-240-022, filed 2/6/06, effective 3/9/06.]

WAC 246-240-025 Notifications. (1) A licensee shall notify the department no later than thirty days after:

(a) An authorized user, an authorized nuclear pharmacist, a radiation safety officer, or an authorized medical physicist permanently discontinues performance of duties under the license or has a name change;

(b) The licensee's mailing address changes;

(c) The licensee's name changes, but the name change does not constitute a transfer of control of the license as described in WAC 246-232-050(2);

(d) The licensee has added to or changed the areas of use identified in the application or on the license where radioactive material is used under either WAC 246-240-151 or 246-240-157; or

(e) The licensee permits an authorized user or an individual qualified to be a radiation safety officer, under WAC 246-240-069 and 246-240-081, to function as a temporary radiation safety officer and to perform the functions of a radiation safety officer in accordance with WAC 246-240-051(3).

(2) The licensee shall send the documents required in this section to the department at P.O. Box 47827, Olympia WA 98504-7827.

[Statutory Authority: RCW 70.98.050. 07-14-131, § 246-240-025, filed 7/3/07, effective 8/3/07; 06-05-019, § 246-240-025, filed 2/6/06, effective 3/9/06; 98-13-037, § 246-240-025, filed 6/8/98, effective 7/9/98.]

WAC 246-240-028 Exemptions regarding Type A specific licenses of broad scope. A licensee possessing a Type A specific license of broad scope for medical use, issued under WAC 246-235-090, is exempt from the provisions of:

(1) WAC 246-240-019 regarding the need to file an amendment to the license for medical use of radioactive material, as described in WAC 246-240-501;

(2) WAC 246-240-022;

(3) WAC 246-240-022 regarding additions to or changes in the areas of use at the addresses identified in the application or on the license;

(4) WAC 246-240-025;

(5) WAC 246-240-025 for an authorized user, an authorized nuclear pharmacist, or an authorized medical physicist;

(6) WAC 246-240-025 regarding additions to or changes in the areas of use identified in the application or on the license where radioactive material is used in accordance with either WAC 246-240-151 or 246-240-157;

(7) WAC 246-240-122.

[Statutory Authority: RCW 70.98.050. 06-05-019, § 246-240-028, filed 2/6/06, effective 3/9/06.]

WAC 246-240-031 License issuance and specific exemptions. (1) The department shall issue a license for the medical use of radioactive material if:

(a) The applicant has filed "Application for Radioactive Material License Medical" in accordance with the instructions in WAC 246-240-019;

(b) The applicant has paid applicable fee under chapter 246-254 WAC;

(c) The department finds the applicant equipped and committed to observe the safety standards established by the department in these regulations for the protection of the public health and safety; and

(d) The applicant meets the requirements of chapter 246-232 WAC.

(2) The department shall issue a license for mobile medical service if the applicant:

(a) Meets the requirements in subsection (1) of this section; and

(b) Assures that individuals or human research subjects to whom unsealed radioactive material, or radiation from implants containing radioactive material, will be administered may be released following treatment in accordance with WAC 246-240-122.

(3) The department may, upon application of any interested person or upon its own initiative, grant exemptions from this chapter that it determines are authorized by law and will not endanger life or property or the common defense and security and are otherwise in the public interest.

[Statutory Authority: RCW 70.98.050. 06-05-019, § 246-240-031, filed 2/6/06, effective 3/9/06.]

WAC 246-240-051 Authority and responsibilities for the radiation protection program. (1) In addition to the radiation protection program requirements of WAC 246-221-005, a licensee's management shall approve in writing:

(a) Requests for a license application, renewal, or amendment before submittal to the department;

(b) Any individual before allowing that individual to work as an authorized user, authorized nuclear pharmacist, or authorized medical physicist; and

(c) Radiation protection program changes that do not require a license amendment and are permitted under WAC 246-240-054;

(2) A licensee's management shall appoint a radiation safety officer, who agrees, in writing, to be responsible for implementing the radiation protection program. The licensee, through the radiation safety officer, shall ensure that radiation safety activities are being performed in accordance with licensee-approved procedures and regulatory requirements.

(3) For up to sixty days each year, a licensee may permit an authorized user or an individual qualified to be a radiation safety officer, under WAC 246-240-069 and 246-240-081, to function as a temporary radiation safety officer and to perform the functions of a radiation safety officer, under subsection (7) of this section, if the licensee takes the actions required in subsections (2), (5), (7), and (8) of this section and notifies the department in accordance with WAC 246-240-025.

(4) A licensee may simultaneously appoint more than one temporary radiation safety officer under subsection (3) of this section, if needed to ensure that the licensee has a temporary radiation safety officer that satisfies the requirements to be a radiation safety officer for each of the different types of uses of radioactive material permitted by the license.

(5) A licensee shall establish the authority, duties, and responsibilities of the radiation safety officer in writing.

(6) Licensees that are authorized for two or more different types of use of radioactive material under WAC 246-240-201, 246-240-251, and/or 246-240-351, shall establish a radiation safety committee to oversee all uses of radioactive material permitted by the license. The committee must include an authorized user of each type of use permitted by the license, the radiation safety officer, a representative of the nursing service, and a representative of management who is neither an authorized user nor a radiation safety officer. The committee may include other members the licensee considers appropriate.

(7) A licensee shall provide the radiation safety officer sufficient authority, organizational freedom, time, resources, and management prerogative, to:

(a) Identify radiation safety problems;

(b) Initiate, recommend, or provide corrective actions;

(c) Stop unsafe operations; and

(d) Verify implementation of corrective actions.

(8) A licensee shall retain a record of actions taken under subsections (1), (2), and (5) of this section in accordance with WAC 246-240-551.

[Statutory Authority: RCW 70.98.050. 06-05-019, § 246-240-051, filed 2/6/06, effective 3/9/06.]

WAC 246-240-054 Radiation protection program changes. (1) A licensee may revise its radiation protection program without department approval if:

(a) The revision does not require a license amendment under WAC 246-240-022;

(b) The revision is in compliance with this chapter and the license;

(c) The revision has been reviewed and approved by the radiation safety officer and licensee management; and

(d) The affected individuals are instructed on the revised program before the changes are implemented.

(2) A licensee shall retain a record of each change in accordance with WAC 246-240-554.

[Statutory Authority: RCW 70.98.050. 06-05-019, § 246-240-054, filed 2/6/06, effective 3/9/06.]

WAC 246-240-057 Supervision. (1) A licensee that permits the receipt, possession, use, or transfer of radioactive material by an individual under the supervision of an authorized user, as allowed by WAC 246-240-016, shall in addition to the requirements in WAC 246-222-030:

(a) Instruct the supervised individual in the licensee's written radiation protection procedures, written directive procedures, this chapter, and license conditions with respect to the use of radioactive material; and

(b) Require the supervised individual to follow the instructions of the supervising authorized user for medical uses of radioactive material, written radiation protection procedures established by the licensee, written directive procedures, regulations of these regulations, and license conditions with respect to the medical use of radioactive material.

(2) A licensee that permits the preparation of radioactive material for medical use by an individual under the supervision of an authorized nuclear pharmacist or physician who is an authorized user, as allowed by WAC 246-240-016, shall:

(a) In addition to the requirements in WAC 246-222-030, instruct the supervised individual in the preparation of radioactive material for medical use, as appropriate to that individual's involvement with radioactive material; and

(b) Require the supervised individual to follow the instructions of the supervising authorized user or authorized nuclear pharmacist regarding the preparation of radioactive material for medical use, written radiation protection procedures established by the licensee, this chapter, and license conditions.

(c) A licensee that permits supervised activities under subsections (1) and (2) of this section is responsible for the acts and omissions of the supervised individual.

[Statutory Authority: RCW 70.98.050. 06-05-019, § 246-240-057, filed 2/6/06, effective 3/9/06.]

WAC 246-240-060 Written directives. (1) A written directive must be dated and signed by an authorized user before the administration of I-131 sodium iodide greater than 1.11 megabecquerels (MBq) (30 microcuries (μCi)), any therapeutic dosage of unsealed radioactive material or any therapeutic dose of radiation from radioactive material.

If, because of the emergent nature of the patient's condition, a delay in order to provide a written directive would jeopardize the patient's health, an oral directive is acceptable. The information contained in the oral directive must be documented as soon as possible in writing in the patient's record. A written directive must be prepared within forty-eight hours of the oral directive.

(2) The written directive must contain the patient or human research subject's name and the following information:

(a) For any administration of quantities greater than 1.11 MBq (30 μCi) of sodium iodide I-131: The dosage;

(b) For an administration of a therapeutic dosage of unsealed radioactive material other than sodium iodide I-131: The radioactive drug, dosage, and route of administration;

(c) For gamma stereotactic radiosurgery: The total dose, treatment site, and values for the target coordinate settings per treatment for each anatomically distinct treatment site;

(d) For teletherapy: The total dose, dose per fraction, number of fractions, and treatment site;

(e) For high dose-rate remote afterloading brachytherapy: The radionuclide, treatment site, dose per fraction, number of fractions, and total dose; or

(f) For all other brachytherapy, including low, medium, and pulsed dose rate remote afterloaders:

(i) Before implantation: Treatment site, the radionuclide, and dose; and

(ii) After implantation but before completion of the procedure: The radionuclide, treatment site, number of sources, and total source strength and exposure time (or the total dose).

(3) A written revision to an existing written directive may be made if the revision is dated and signed by an authorized user before the administration of the dosage of unsealed radioactive material, the brachytherapy dose, the gamma stereotactic radiosurgery dose, the teletherapy dose, or the next fractional dose.

If, because of the patient's condition, a delay in order to provide a written revision to an existing written directive would jeopardize the patient's health, an oral revision to an existing written directive is acceptable. The oral revision must be documented as soon as possible in the patient's record. A revised written directive must be signed by the authorized user within forty-eight hours of the oral revision.

(4) The licensee shall retain a copy of the written directive in accordance with WAC 246-240-557.

[Statutory Authority: RCW 70.98.050. 06-05-019, § 246-240-060, filed 2/6/06, effective 3/9/06.]

WAC 246-240-063 Procedures for administrations requiring a written directive. (1) For any administration requiring a written directive, the licensee shall develop, implement, and maintain written procedures to provide high confidence that:

(a) The patient's or human research subject's identity is verified before each administration; and

(b) Each administration is in accordance with the written directive.

(2) At a minimum, the procedures required by subsection (1) of this section must address the following items that are applicable to the licensee's use of radioactive material:

(a) Verifying the identity of the patient or human research subject;

(b) Verifying that the administration is in accordance with the treatment plan, if applicable, and the written directive;

(c) Checking both manual and computer-generated dose calculations; and

(d) Verifying that any computer-generated dose calculations are correctly transferred into the consoles of therapeutic medical units authorized by WAC 246-240-351.

(3) A licensee shall retain a copy of the procedures required under subsection (1) of this section in accordance with WAC 246-240-560.

[Statutory Authority: RCW 70.98.050. 06-05-019, § 246-240-063, filed 2/6/06, effective 3/9/06.]

WAC 246-240-066 Suppliers for sealed sources or devices for medical use. For medical use, a licensee may only use:

(1) Sealed sources or devices manufactured, labeled, packaged, and distributed in accordance with a license issued under WAC 246-235-102.

(2) Sealed sources or devices noncommercially transferred from a U.S. NRC or agreement state medical use licensee; or

(3) Teletherapy sources manufactured and distributed in accordance with a license issued under chapter 246-232 WAC.

[Statutory Authority: RCW 70.98.050. 07-14-131, § 246-240-066, filed 7/3/07, effective 8/3/07; 06-05-019, § 246-240-066, filed 2/6/06, effective 3/9/06.]

WAC 246-240-069 Training for radiation safety officer. Except as provided in WAC 246-240-078, the lic-

ensee shall require an individual fulfilling the responsibilities of the radiation safety officer under WAC 246-240-051 to be an individual who:

(1) Is certified by a specialty board whose certification process has been recognized by the department, the U.S. NRC, or an agreement state, and who meets the requirements of subsections (4) and (5) of this section. (Specialty boards whose certification process has been recognized by the department, the U.S. Nuclear Regulatory Commission or an agreement state will be posted on the NRC's web page, at http://www.nrc.gov.) To be recognized, a specialty board shall require all candidates for certification to:

(a) Hold a bachelor's or graduate degree from an accredited college or university in physical science or engineering or biological science with a minimum of twenty college credits in physical science;

(b) Have five or more years of professional experience in health physics (graduate training may be substituted for no more than two years of the required experience) including at least three years in applied health physics; and

(c) Pass an examination administered by diplomates of the specialty board, which evaluates knowledge and competence in radiation physics and instrumentation, radiation protection, mathematics pertaining to the use and measurement of radioactivity, radiation biology, and radiation dosimetry; or

(i) Hold a master's or doctor's degree in physics, medical physics, other physical science, engineering, or applied mathematics from an accredited college or university;

(ii) Have two years of full-time practical training and/or supervised experience in medical physics:

(A) Under the supervision of a medical physicist who is certified in medical physics by a specialty board recognized by the commission or an agreement state; or

(B) In clinical nuclear medicine facilities providing diagnostic and/or therapeutic services under the direction of physicians who meet the requirements for authorized users in WAC 246-240-163 or 246-240-210; and

(iii) Pass an examination, administered by diplomates of the specialty board, that assesses knowledge and competence in clinical diagnostic radiological or nuclear medicine physics and in radiation safety; or

(d) Obtain written certification signed by a preceptor radiation safety officer that the individual has achieved a level of radiation safety knowledge sufficient to function independently as a radiation safety officer for a medical use licensee; or

(2)(a) Has completed a structured educational program consisting of both:

(i) Two hundred hours of classroom and laboratory training in the following areas:

(A) Radiation physics and instrumentation;

(B) Radiation protection;

(C) Mathematics pertaining to the use and measurement of radioactivity;

(D) Radiation biology; and

(E) Radiation dosimetry; and

(ii) One year of full-time radiation safety experience under the supervision of the individual identified as the radiation safety officer on a department or agreement state license or license issued by the U.S. NRC that authorizes similar type(s) of use(s) of radioactive material involving the following:

(A) Shipping, receiving, and performing related radiation surveys;

(B) Using and performing checks for proper operation of instruments used to determine the activity of dosages, survey meters, and instruments used to measure radionuclides;

(C) Securing and controlling radioactive material;

(D) Using administrative controls to avoid mistakes in the administration of radioactive material;

(E) Using procedures to prevent or minimize radioactive contamination and using proper decontamination procedures;

(F) Using emergency procedures to control radioactive material; and

(G) Disposing of radioactive material; or

(b) Is a medical physicist who has been certified by a specialty board whose certification process has been recognized by the department, the U.S. NRC, or an agreement state under WAC 246-240-072 and has experience in radiation safety for similar types of use of radioactive material for which the licensee is seeking the approval of the individual as radiation safety officer and who meets the requirements in subsections (4) and (5) of this section; or

(3) Is an authorized user, authorized medical physicist, or authorized nuclear pharmacist identified on the licensee's license or a medical physicist who has been certified by a specialty board whose certification process has been recognized by the department, the U.S. Nuclear Regulatory Commission or an agreement state under WAC 246-240-072 and has experience with the radiation safety aspects of similar types of use of radioactive material for which the individual has radiation safety officer responsibilities; and

(4) Has obtained written certification, signed by a preceptor radiation safety officer, that the individual has satisfactorily completed the requirements in subsection (5) of this section, and in subsection (1)(a) and (b), or (c)(i) and (ii) of this section, or subsection (2)(a) or (b) of this section, or subsection (3) of this section and has achieved a level of radiation safety knowledge sufficient to function independently as a radiation safety officer for a medical use licensee; and

(5) Has training in the radiation safety, regulatory issues, and emergency procedures for the types of use for which a licensee seeks approval. This training requirement may be satisfied by completing training that is supervised by an authorized medical physicist, authorized user, authorized nuclear pharmacist, or radiation safety officer, as appropriate, who is authorized for the type(s) of use for which the licensee is seeking approval.

[Statutory Authority: RCW 70.98.050. 07-14-131, § 246-240-069, filed 7/3/07, effective 8/3/07; 06-05-019, § 246-240-069, filed 2/6/06, effective 3/9/06.]

WAC 246-240-072 Training for an authorized medical physicist. Except as provided in WAC 246-240-078, the licensee shall require the authorized medical physicist to be an individual who:

(1) Is certified by a specialty board whose certification process has been recognized by the department, the U.S. Nuclear Regulatory Commission or an agreement state and who meets the requirements in subsections (2)(b) and (3) of this section. (Specialty boards whose certification process

has been recognized by the commission or an agreement state will be posted on the NRC's web page at http://www.nrc.gov.) To be recognized, a specialty board shall require all candidates for certification to:

(a) Hold a master's or doctor's degree in physics, medical physics, other physical science, engineering, or applied mathematics from an accredited college or university;

(b) Have two years of full-time practical training and/or supervised experience in medical physics:

(i) Under the supervision of a medical physicist who is certified in medical physics by a specialty board recognized by the commission or an agreement state; or

(ii) In clinical radiation facilities providing high energy, external beam therapy (photons and electrons with energies greater than or equal to one million electron volts) and brachytherapy services under the direction of physicians who meet the requirements for authorized users in WAC 246-240-278 or 246-240-399;

(c) Pass an examination, administered by diplomates of the specialty board, which assesses knowledge and competence in clinical radiation therapy, radiation safety, calibration, quality assurance, and treatment planning for external beam therapy, brachytherapy, and stereotactic radiosurgery; or

(2)(a) Holds a master's or doctor's degree in physics, medical physics, other physical science, engineering, or applied mathematics from an accredited college or university; and has completed one year of full-time training in medical physics and an additional year of full-time work experience under the supervision of an individual who meets the requirements for an authorized medical physicist for the type(s) of use modalities for which the individual is seeking authorization. This training and work experience must be conducted in clinical radiation facilities that provide high energy, external beam therapy and brachytherapy services and must include:

(i) Performing sealed source leak tests and inventories;

(ii) Performing decay corrections;

(iii) Performing full calibration and periodic spot checks of external beam treatment units, stereotactic radiosurgery units, and remote afterloading units as applicable; and

(iv) Conducting radiation surveys around external beam treatment units, stereotactic radiosurgery units, and remote afterloading units as applicable; and

(b) Has obtained written certification that the individual has satisfactorily completed the requirements in subsections (1)(a) and (b) and (3), or (2)(a) and (3) of this section, and has achieved a level of competency sufficient to function independently as an authorized medical physicist for each type of therapeutic medical unit for which the individual is requesting authorized medical physicist status. The written certification must be signed by a preceptor authorized medical physicist who meets the requirements in WAC 246-240-072 or equivalent U.S. NRC or agreement state requirements for an authorized medical physicist for each type of therapeutic medical unit for which the individual is requesting authorized medical physicist status; and

(3) Has training for the type(s) of use in the modalities for which authorization is sought that includes hands-on device operation, safety procedures, clinical use, and the operation of a treatment planning system. This training requirement may be satisfied by satisfactorily completing either a training program provided by the vendor or by training supervised by an authorized medical physicist authorized for the type(s) of use for which the individual is seeking authorization.

[Statutory Authority: RCW 70.98.050. 07-14-131, § 246-240-072, filed 7/3/07, effective 8/3/07; 06-05-019, § 246-240-072, filed 2/6/06, effective 3/9/06.]

WAC 246-240-075 Training for an authorized nuclear pharmacist. Except as provided in WAC 246-240-078, the licensee shall require the authorized nuclear pharmacist to be a pharmacist who:

(1) Is certified by a specialty board whose certification process has been recognized by the department, the U.S. Nuclear Regulatory Commission or an agreement state and who meets the requirements in subsection (2)(b) of this section. (Specialty boards whose certification process has been recognized by the commission or an agreement state will be posted on the NRC's web page at http://www.nrc.gov.) To be recognized, a specialty board shall require all candidates for certification to:

(a) Have graduated from a pharmacy program accredited by the American Council On Pharmaceutical Education (ACPE) or have passed the Foreign Pharmacy Graduate Examination Committee (FPGEC) examination;

(b) Hold a current, active license to practice pharmacy;

(c) Provide evidence of having acquired at least four thousand hours of training/experience in nuclear pharmacy practice. Academic training may be substituted for no more than two thousand hours of the required training and experience; and

(d) Pass an examination in nuclear pharmacy administered by diplomates of the specialty board, which assesses knowledge and competency in procurement, compounding, quality assurance, dispensing, distribution, health and safety, radiation safety, provision of information and consultation, monitoring patient outcomes, research and development; or

(2)(a) Has completed two hundred hours in a structured educational program consisting of both:

(i) Didactic training in the following areas:

(A) Radiation physics and instrumentation;

(B) Radiation protection;

(C) Mathematics pertaining to the use and measurement of radioactivity;

(D) Chemistry of radioactive material for medical use; and

(E) Radiation biology; and

(ii) Supervised practical experience in a nuclear pharmacy involving:

(A) Shipping, receiving, and performing related radiation surveys;

(B) Using and performing checks for proper operation of instruments used to determine the activity of dosages, survey meters, and, if appropriate, instruments used to measure alpha-or beta-emitting radionuclides;

(C) Calculating, assaying, and safely preparing dosages for patients or human research subjects;

(D) Using administrative controls to avoid medical events in the administration of radioactive material; and

(E) Using procedures to prevent or minimize radioactive contamination and using proper decontamination procedures; and

(b) Has obtained written certification, signed by a preceptor authorized nuclear pharmacist, that the individual has satisfactorily completed the requirements in subsections (1)(a), (b), and (c) or (2)(a) of this section and has achieved a level of competency sufficient to function independently as an authorized nuclear pharmacist.

[Statutory Authority: RCW 70.98.050. 06-05-019, § 246-240-075, filed 2/6/06, effective 3/9/06.]

WAC 246-240-078 Training for experienced radiation safety officer, teletherapy or medical physicist, authorized user, and nuclear pharmacist. (1) An individual identified as a radiation safety officer, a teletherapy or medical physicist, or a nuclear pharmacist on a department, U.S. NRC, or agreement state license, or a permit issued by an agreement state or U.S. NRC broad scope licensee or master material license permit, or by a master material license permittee of broad scope before October 24, 2006, need not comply with the training requirements of WAC 246-240-278, 246-240-072, or 246-240-075, respectively.

(2) Physicians, dentists, or podiatrists identified as authorized users for the medical use of radioactive material on a license issued by the department or agreement state, or U.S. NRC broad scope license, or license issued before October 24, 2006, who perform only those medical uses for which they were authorized on that date need not comply with the training requirements of WAC 246-240-151 and 246-240-399.

[Statutory Authority: RCW 70.98.050. 06-05-019, § 246-240-078, filed 2/6/06, effective 3/9/06.]

WAC 246-240-081 Recentness of training. Training and experience specified in WAC 246-240-069, 246-240-072, 246-240-075, 246-240-078, 246-240-154, 246-240-163, 246-240-210, 246-240-213, 246-240-216, 246-240-278, 246-240-281, and 246-240-399, must have been obtained within the seven years preceding the date of application or the individual must have had related continuing education and experience since the required training and experience was completed.

[Statutory Authority: RCW 70.98.050. 07-14-131, § 246-240-081, filed 7/3/07, effective 8/3/07; 06-05-019, § 246-240-081, filed 2/6/06, effective 3/9/06.]

WAC 246-240-101 Possession, use, and calibration of instruments used to measure the activity of unsealed radioactive material. (1) For direct measurements performed in accordance with WAC 246-240-107, a licensee shall possess and use instrumentation to measure the activity of unsealed radioactive material before it is administered to each patient or human research subject.

(2) A licensee shall calibrate the instrumentation required in subsection (1) of this section in accordance with nationally recognized standards or the manufacturer's instructions.

(3) A licensee shall retain a record of each instrument calibration required by this section in accordance with WAC 246-240-563.

[Statutory Authority: RCW 70.98.050. 06-05-019, § 246-240-101, filed 2/6/06, effective 3/9/06.]

WAC 246-240-104 Calibration of survey instruments. (1) A licensee shall calibrate the survey instruments used to show compliance with this section and WAC 246-240-587 before first use, annually, and following a repair that affects the calibration. A licensee shall:

(a) Calibrate all scales with readings up to 10 mSv (1000 mrem) per hour with a radiation source;

(b) Calibrate two separated readings on each scale or decade that will be used to show compliance; and

(c) Conspicuously note on the instrument the date of calibration.

(2) A licensee may not use survey instruments if the difference between the indicated exposure rate and the calculated exposure rate is more than twenty percent.

(3) A licensee shall retain a record of each survey instrument calibration in accordance with WAC 246-240-566.

[Statutory Authority: RCW 70.98.050. 06-05-019, § 246-240-104, filed 2/6/06, effective 3/9/06.]

WAC 246-240-107 Determination of dosages of unsealed radioactive material for medical use. (1) A licensee shall determine and record the activity of each dosage before medical use.

(2) For a unit dosage, this determination must be made by:

(a) Direct measurement of radioactivity; or

(b) A decay correction, based on the activity or activity concentration determined by:

(i) A manufacturer or preparer licensed under WAC 246-235-100 or equivalent U.S. NRC or agreement state requirements; or

(ii) An agreement state or U.S. NRC licensee for use in research in accordance with a radioactive drug research committee-approved protocol or an investigational new drug (IND) protocol accepted by FDA.

(3) For other than unit dosages, this determination must be made by:

(a) Direct measurement of radioactivity;

(b) Combination of measurement of radioactivity and mathematical calculations; or

(c) Combination of volumetric measurements and mathematical calculations, based on the measurement made by a manufacturer or preparer licensed under WAC 246-235-100 or equivalent agreement state requirements.

(4) Unless otherwise directed by the authorized user, a licensee may not use a dosage if the dosage does not fall within the prescribed dosage range or if the dosage differs from the prescribed dosage by more than twenty percent.

(5) A licensee shall retain a record of the dosage determination required by this section in accordance with WAC 246-240-569.

[Statutory Authority: RCW 70.98.050. 06-05-019, § 246-240-107, filed 2/6/06, effective 3/9/06.]

WAC 246-240-110 Authorization for calibration, transmission, and reference sources. Any person authorized by WAC 246-240-016 for medical use of radioactive material may receive, possess, and use any of the following

radioactive material for check, calibration, transmission, and reference use:

(1) Sealed sources, not exceeding 1.11 GBq (30 mCi) each, manufactured and distributed by a person licensed under WAC 246-235-102 or equivalent agreement state or U.S. NRC regulations.

(2) Sealed sources, not exceeding 1.11 GBq (30 mCi) each, redistributed by a licensee authorized to redistribute the sealed sources manufactured and distributed by a person licensed under WAC 246-235-102, or equivalent agreement state or U.S. NRC regulations if the redistributed sealed sources are in the original packaging and shielding and are accompanied by the manufacturer's approved instructions.

(3) Any radioactive material with a half-life not longer than one hundred twenty days in individual amounts not to exceed 0.56 GBq (15 mCi).

(4) Any radioactive material with a half-life longer than one hundred twenty days in individual amounts not to exceed the smaller of 7.4 MBq (200 μCi) or 1000 times the quantities in Schedule B of WAC 246-232-120.

(5) Technetium-99m in amounts as needed.

[Statutory Authority: RCW 70.98.050. 07-14-131, § 246-240-110, filed 7/3/07, effective 8/3/07; 06-05-019, § 246-240-110, filed 2/6/06, effective 3/9/06.]

WAC 246-240-113 Requirements for possession of sealed sources and brachytherapy sources. (1) A licensee in possession of any sealed source or brachytherapy source shall follow the radiation safety and handling instructions supplied by the manufacturer.

(2) A licensee in possession of a sealed source shall:

(a) Test the source for leakage before its first use unless the licensee has a certificate from the supplier indicating that the source was tested within six months before transfer to the licensee; and

(b) Test the source for leakage at intervals not to exceed six months or at other intervals approved by the department, the U.S. NRC, or an agreement state in the sealed source and device registry.

(3) To satisfy the leak test requirements of this section, the licensee shall ensure the sample is analyzed by such method that the leak test can detect the presence of 185 Bq (0.005 μCi) of radioactive material in the sample.

(4) A licensee shall retain leak test records in accordance with WAC 246-240-572(1).

(5) If the leak test reveals the presence of 185 Bq (0.005 μCi) or more of removable contamination, the licensee shall:

(a) Immediately withdraw the sealed source from use and store, dispose, or cause it to be repaired in accordance with the requirements in chapters 246-221 and 246-232 WAC; and

(b) File a report within five days of the leak test in accordance with WAC 246-240-657.

(6) A licensee need not perform a leak test on the following sources:

(a) Sources containing only radioactive material with a half-life of less than thirty days;

(b) Sources containing only radioactive material as a gas;

(c) Sources containing 3.7 MBq (100 μCi) or less of beta- or gamma-emitting material or 0.37 MBq (10 μCi) or less of alpha-emitting material;

(d) Seeds of iridium-192 encased in nylon ribbon; and

(e) Sources stored and not being used. However, the licensee shall test each source for leakage before any use or transfer unless it has been leak tested within six months before the date of use or transfer.

(7) A licensee in possession of sealed sources or brachytherapy sources, except for gamma stereotactic radiosurgery sources, shall conduct a physical inventory of all the sources in its possession at intervals not to exceed six months. The licensee shall retain each inventory record in accordance with WAC 246-240-572.

[Statutory Authority: RCW 70.98.050. 06-05-019, § 246-240-113, filed 2/6/06, effective 3/9/06.]

WAC 246-240-116 Labeling of vials and syringes. Each syringe and vial that contains unsealed radioactive material must be labeled to identify the radioactive drug. Each syringe shield and vial shield must also be labeled unless the label on the syringe or vial is visible when shielded.

[Statutory Authority: RCW 70.98.050. 06-05-019, § 246-240-116, filed 2/6/06, effective 3/9/06.]

WAC 246-240-119 Surveys of ambient radiation exposure rate. (1) In addition to the surveys required by chapter 246-221 WAC, a licensee shall survey with a radiation detection survey instrument at the end of each day of use. A licensee shall survey all areas where unsealed radioactive material requiring a written directive was prepared for use or administered.

(2) A licensee does not need to perform the surveys required by subsection (1) of this section in an area(s) where patients or human research subjects are confined when they cannot be released under WAC 246-240-122.

(3) A licensee shall retain a record of each survey in accordance with WAC 246-240-575.

[Statutory Authority: RCW 70.98.050. 06-05-019, § 246-240-119, filed 2/6/06, effective 3/9/06.]

WAC 246-240-122 Release of individuals containing unsealed radioactive material or implants containing radioactive material. (1) A licensee may authorize the release from its control of any individual who has been administered unsealed radioactive material or implants containing radioactive material if the total effective dose equivalent to any other individual from exposure to the released individual is not likely to exceed 5 mSv (0.5 rem).

(2) A licensee shall provide the released individual, or the individual's parent or guardian, with instructions, including written instructions, on actions recommended to maintain doses to other individuals as low as is reasonably achievable if the total effective dose equivalent to any other individual is likely to exceed 1 mSv (0.1 rem). If the total effective dose equivalent to a nursing infant or child could exceed 1 mSv (0.1 rem) assuming there were no interruption of breast-feeding, the instructions must also include:

(a) Guidance on the interruption or discontinuation of breast-feeding; and

(b) Information on the potential consequences, if any, of failure to follow the guidance.

(3) A licensee shall maintain a record of the basis for authorizing the release of an individual in accordance with WAC 246-240-578(1).

(4) The licensee shall maintain a record of instructions provided to a breast-feeding female in accordance with WAC 246-240-578(2). NUREG-1556, Vol. 9, "*Consolidated Guidance About Materials Licenses: Program-Specific Guidance About Medical Licenses*," describes methods for calculating doses to other individuals and contains tables of activities not likely to cause doses exceeding 5 mSv (0.5 rem).

[Statutory Authority: RCW 70.98.050. 06-05-019, § 246-240-122, filed 2/6/06, effective 3/9/06.]

WAC 246-240-125 Provision of mobile medical service. (1) A licensee who provides mobile medical service shall:

(a) Obtain a letter signed by the management of each client to whom services are rendered that permits the use of radioactive material at the client's address and clearly delineates the authority and responsibility of the licensee and the client;

(b) Check instruments used to measure the activity of unsealed radioactive material for proper function before medical use at each client's address or on each day of use, whichever is more frequent. At a minimum, the check for proper function required by this section must include a constancy check;

(c) Check survey instruments for proper operation with a dedicated check source before use at each client's address; and

(d) Before leaving a client's address, survey all areas of use to ensure compliance with chapter 246-221 WAC.

(2) A mobile medical service may not have radioactive material delivered from the manufacturer or the distributor to the client unless the client has a license allowing possession of the radioactive material. Radioactive material delivered to the client must be received and handled in conformance with the client's license.

(3) A licensee providing mobile medical services shall retain the letter required in subsection (1)(a) of this section and the record of each survey required in subsection (1)(d) of this section in accordance with WAC 246-240-581.

[Statutory Authority: RCW 70.98.050. 06-05-019, § 246-240-125, filed 2/6/06, effective 3/9/06.]

WAC 246-240-128 Decay-in-storage. (1) A licensee may hold radioactive material with a physical half-life of less than one hundred twenty days for decay-in-storage before disposal without regard to its radioactivity if it:

(a) Monitors radioactive material at the surface before disposal and determines that its radioactivity cannot be distinguished from the background radiation level with an appropriate radiation detection survey meter set on its most sensitive scale and with no interposed shielding; and

(b) Removes or obliterates all radiation labels, except for radiation labels on materials that are within containers and that will be managed as biomedical waste after they have been released from the licensee.

(2) A licensee shall retain a record of each disposal permitted under subsection (1) of this section in accordance with WAC 246-240-584.

[Statutory Authority: RCW 70.98.050. 06-05-019, § 246-240-128, filed 2/6/06, effective 3/9/06.]

WAC 246-240-151 Use of unsealed radioactive material for uptake, dilution, and excretion studies for which a written directive is not required. Except for quantities that require a written directive under WAC 246-240-060(2), a licensee may use any unsealed radioactive material prepared for medical use for uptake, dilution, or excretion studies that is:

(1) Obtained from a manufacturer or preparer licensed under WAC 246-235-100(1) or equivalent U.S. NRC or agreement state requirements; or

(2) Prepared by an authorized nuclear pharmacist, or a physician who is an authorized user and who meets the requirements specified in WAC 246-240-163, or 246-240-210 and 246-240-163 (3)(a)(ii)(G), or an individual under the supervision of either as specified in WAC 246-240-057; or

(3) Obtained from and prepared by an agreement state or U.S. NRC licensee for use in research in accordance with a radioactive drug research committee-approved protocol or an investigational new drug (IND) protocol accepted by FDA; or

(4) Prepared by the licensee for use in research in accordance with a radioactive drug research committee-approved application or an investigational new drug (IND) protocol accepted by FDA.

[Statutory Authority: RCW 70.98.050. 07-14-131, § 246-240-151, filed 7/3/07, effective 8/3/07; 06-05-019, § 246-240-151, filed 2/6/06, effective 3/9/06.]

WAC 246-240-154 Training for uptake, dilution, and excretion studies. Except as provided in WAC 246-240-078, the licensee shall require an authorized user of unsealed radioactive material for the uses authorized under WAC 246-240-151 to be a physician who:

(1) Is certified by a medical specialty board whose certification process has been recognized by the department, the U.S. Nuclear Regulatory Commission or an agreement state and who meets the requirements of subsection (3)(b) of this section. (Specialty boards whose certification process has been recognized by the department, the U.S. NRC or an agreement state will be posted on the NRC's web page at http://www.nrc.gov.) To be recognized, a specialty board shall require all candidates for certification to:

(a) Meet the requirements in subsection (3)(a) of this section; and

(b) Pass an examination, administered by diplomates of the specialty board, which assesses knowledge and competence in radiation safety, radionuclide handling, and quality control; or

(2) Is an authorized user under WAC 246-240-163 or 246-240-210 or equivalent agreement state or U.S. NRC requirements; or subsection (3)(a) of this section; or

(3)(a) Has completed sixty hours of training and experience, including a minimum of eight hours of classroom and laboratory training, in basic radionuclide handling techniques

applicable to the medical use of unsealed radioactive material for uptake, dilution, and excretion studies. The training and experience must include:

(i) Classroom and laboratory training in the following areas:

(A) Radiation physics and instrumentation;

(B) Radiation protection;

(C) Mathematics pertaining to the use and measurement of radioactivity;

(D) Chemistry of radioactive material for medical use; and

(E) Radiation biology; and

(ii) Work experience, under the supervision of an authorized user who meets the requirements in WAC 246-240-154, 246-240-163, or 246-240-210 or equivalent U.S. NRC or agreement state requirements, involving:

(A) Ordering, receiving, and unpacking radioactive materials safely and performing the related radiation surveys;

(B) Performing quality control procedures on instruments used to determine the activity of dosages and performing checks for proper operation of survey meters;

(C) Calculating, measuring, and safely preparing patient or human research subject dosages;

(D) Using administrative controls to prevent a medical event involving the use of unsealed radioactive material;

(E) Using procedures to contain spilled radioactive material safely and using proper decontamination procedures; and

(F) Administering dosages of radioactive drugs to patients or human research subjects; and

(b) Has obtained written certification, signed by a preceptor authorized user who meets the requirements in WAC 246-240-154, 246-240-163, or 246-240-210 or equivalent agreement state or U.S. NRC requirements, that the individual has satisfactorily completed the requirements in (a) of this subsection and has achieved a level of competency sufficient to function independently as an authorized user for the medical uses authorized under WAC 246-240-151.

[Statutory Authority: RCW 70.98.050. 07-14-131, § 246-240-154, filed 7/3/07, effective 8/3/07; 06-05-019, § 246-240-154, filed 2/6/06, effective 3/9/06.]

WAC 246-240-157 Use of unsealed radioactive material for imaging and localization studies for which a written directive is not required. Except for quantities that require a written directive under WAC 246-240-060(2), a licensee may use any unsealed radioactive material prepared for medical use for imaging and localization studies that is:

(1) Obtained from a manufacturer or preparer licensed under WAC 246-235-100(1) or equivalent agreement state or U.S. NRC requirements; or

(2) Prepared by an authorized nuclear pharmacist, a physician who is an authorized user and who meets the requirements specified in WAC 246-240-163, or 246-240-210 and 246-240-163 (3)(a)(ii)(G), or an individual under the supervision of either as specified in WAC 246-240-057;

(3) Obtained from and prepared by an agreement state or U.S. NRC licensee for use in research in accordance with a radioactive drug research committee-approved protocol or an investigational new drug (IND) protocol accepted by FDA; or

(4) Prepared by the licensee for use in research in accordance with a radioactive drug research committee-approved application or an investigational new drug (IND) protocol accepted by FDA.

[Statutory Authority: RCW 70.98.050. 07-14-131, § 246-240-157, filed 7/3/07, effective 8/3/07; 06-05-019, § 246-240-157, filed 2/6/06, effective 3/9/06.]

WAC 246-240-160 Permissible molybdenum-99 concentration. (1) A licensee may not administer to humans a radiopharmaceutical that contains more than 5.55 kilobecquerel of molybdenum-99 per 37 megabecquerel of technetium-99m (0.15 microcurie of molybdenum-99 per millicurie of technetium-99m).

(2) A licensee that uses molybdenum-99/technetium-99m generators for preparing a technetium-99m radiopharmaceutical shall measure the molybdenum-99 concentration of the first eluate after receipt of a generator to demonstrate compliance with subsection (1) of this section.

(3) If a licensee is required to measure the molybdenum-99 concentration, the licensee shall retain a record of each measurement in accordance with WAC 246-240-587.

[Statutory Authority: RCW 70.98.050. 06-05-019, § 246-240-160, filed 2/6/06, effective 3/9/06.]

WAC 246-240-163 Training for imaging and localization studies. Except as provided in WAC 246-240-078, the licensee shall require an authorized user of unsealed radioactive material for the uses authorized under WAC 246-240-157 to be a physician who:

(1) Is certified by a medical specialty board whose certification process has been recognized by the department, the U.S. Nuclear Regulatory Commission or an agreement state and who meets the requirements in subsection (3)(b) of this section. (Specialty boards whose certification process has been recognized by the commission or an agreement state will be posted on the U.S. NRC's web page at http://www.nrc.gov.) To be recognized, a specialty board shall require all candidates for certification to:

(a) Satisfy the requirements in subsection (3)(a) of this section; and

(b) Pass an examination, administered by diplomates of the specialty board, which assesses knowledge and competence in radiation safety, radionuclide handling, and quality control;

(2) Is an authorized user under WAC 246-240-210 and meets the requirements in WAC 246-240-163 (3)(a)(ii)(G) and 246-240-210 or equivalent agreement state or U.S. NRC requirements; or

(3)(a) Has completed seven hundred hours of training and experience, including a minimum of eighty hours of classroom and laboratory training, in basic radionuclide handling techniques applicable to the medical use of unsealed radioactive material for imaging and localization studies. The training and experience must include, at a minimum:

(i) Classroom and laboratory training in the following areas:

(A) Radiation physics and instrumentation;

(B) Radiation protection;

(C) Mathematics pertaining to the use and measurement of radioactivity;

(D) Chemistry of radioactive material for medical use;

(E) Radiation biology; and

(ii) Work experience, under the supervision of an authorized user, who meets the requirements in WAC 246-240-163, or 246-240-210 and 246-240-163 (3)(a)(ii)(G), or equivalent agreement state or U.S. NRC requirements, involving:

(A) Ordering, receiving, and unpacking radioactive materials safely and performing the related radiation surveys;

(B) Performing quality control procedures on instruments used to determine the activity of dosages and performing checks for proper operation of survey meters;

(C) Calculating, measuring, and safely preparing patient or human research subject dosages;

(D) Using administrative controls to prevent a medical event involving the use of unsealed radioactive material;

(E) Using procedures to safely contain spilled radioactive material and using proper decontamination procedures;

(F) Administering dosages of radioactive drugs to patients or human research subjects; and

(G) Eluting generator systems appropriate for preparation of radioactive drugs for imaging and localization studies, measuring and testing the eluate for radionuclidic purity, and processing the eluate with reagent kits to prepare labeled radioactive drugs; and

(b) Has obtained written certification, signed by a preceptor authorized user who meets the requirements in WAC 246-240-163, or 246-240-210 and 246-240-163 (3)(a)(ii)(G) or equivalent agreement state or U.S. NRC requirements, that the individual has satisfactorily completed the requirements in (a) of this subsection and has achieved a level of competency sufficient to function independently as an authorized user for the medical uses authorized under WAC 246-240-151 and 246-240-157.

[Statutory Authority: RCW 70.98.050. 07-14-131, § 246-240-163, filed 7/3/07, effective 8/3/07; 06-05-019, § 246-240-163, filed 2/6/06, effective 3/9/06.]

WAC 246-240-201 Use of unsealed radioactive material for which a written directive is required. A licensee may use any unsealed radioactive material prepared for medical use and for which a written directive is required that is:

(1) Obtained from a manufacturer or preparer licensed under WAC 246-235-100(1) or equivalent agreement state or U.S. NRC requirements; or

(2) Prepared by an authorized nuclear pharmacist, a physician who is an authorized user and who meets the requirements specified in WAC 246-240-163 or 246-240-210, or an individual under the supervision of either as specified in WAC 246-240-057; or

(3) Obtained from and prepared by an agreement state or U.S. NRC licensee for use in research in accordance with an investigational new drug (IND) protocol accepted by FDA; or

(4) Prepared by the licensee for use in research in accordance with an investigational new drug (IND) protocol accepted by FDA.

[Statutory Authority: RCW 70.98.050. 06-05-019, § 246-240-201, filed 2/6/06, effective 3/9/06.]

WAC 246-240-204 Safety instruction. In addition to the requirements of WAC 246-222-030:

(1) A licensee shall provide radiation safety instruction, initially and at least annually, to personnel caring for patients or human research subjects who cannot be released under WAC 246-240-122. To satisfy this requirement, the instruction must be commensurate with the duties of the personnel and include:

(a) Patient or human research subject control;

(b) Visitor control, including:

(i) Routine visitation to hospitalized individuals in accordance with WAC 246-221-060 (1)(a); and

(ii) Visitation authorized in accordance with WAC 246-221-060(2);

(c) Contamination control;

(d) Waste control; and

(e) Notification of the radiation safety officer, or their designee, and the authorized user if the patient or the human research subject has a medical emergency or dies.

(2) A licensee shall retain a record of individuals receiving instruction in accordance with WAC 246-240-590.

[Statutory Authority: RCW 70.98.050. 06-05-019, § 246-240-204, filed 2/6/06, effective 3/9/06.]

WAC 246-240-207 Safety precautions. (1) For each patient or human research subject who cannot be released under WAC 246-240-122, a licensee shall:

(a) Quarter the patient or the human research subject either in:

(i) A private room with a private sanitary facility; or

(ii) A room, with a private sanitary facility, with another individual who also has received therapy with unsealed radioactive material and who also cannot be released under WAC 246-240-122;

(b) Visibly post the patient's or the human research subject's room with a "Caution—Radioactive Materials" sign.

(c) Note on the door or in the patient's or human research subject's chart where and how long visitors may stay in the patient's or the human research subject's room; and

(d) Either monitor material and items removed from the patient's or the human research subject's room to determine that their radioactivity cannot be distinguished from the natural background radiation level with a radiation detection survey instrument set on its most sensitive scale and with no interposed shielding, or handle the material and items as radioactive waste.

(2) A licensee shall notify the radiation safety officer, or their designee, and the authorized user as soon as possible if the patient or human research subject has a medical emergency or dies.

[Statutory Authority: RCW 70.98.050. 06-05-019, § 246-240-207, filed 2/6/06, effective 3/9/06.]

WAC 246-240-210 Training for use of unsealed radioactive material for which a written directive is required. Except as provided in WAC 246-240-078, the licensee shall require an authorized user of unsealed radioactive material for the uses authorized under WAC 246-240-201 to be a physician who:

(1) Is certified by a medical specialty board whose certification process has been recognized by the department, the U.S. Nuclear Regulatory Commission or an agreement state. (Specialty boards whose certification process has been recog-

nized by the commission or an agreement state will be posted on the NRC's web page at http://www.nrc.gov.) To be recognized, a specialty board shall require all candidates for certification to:

(a) Successfully complete a residency training in a radiation therapy or nuclear medicine training program or a program in a related medical specialty that includes seven hundred hours of training and experience as described in subsection (2) of this section. Eligible training programs must be approved by the Residency Review Committee of the Accreditation Council for Graduate Medical Education or Royal College of Physicians and Surgeons of Canada or the Committee on Postgraduate Training of the American Osteopathic Association;

(b) Pass an examination, administered by diplomates of the specialty board, which tests knowledge and competence in radiation safety, radionuclide handling, quality assurance, and clinical use of unsealed by-product material; and

(c) Obtain written certification that the individual has achieved a level of competency sufficient to function independently as an authorized user for the medical uses authorized under WAC 246-240-201. The written certification must be signed by a preceptor authorized user who meets the requirements in WAC 246-240-210 or equivalent U.S. NRC or agreement state requirements. The preceptor authorized user, who meets the requirements in WAC 246-240-210 must have experience in administering dosages in the same dosage category or categories (i.e., this section) as the individual requesting authorized user status; or

(2) Has completed seven hundred hours of training and experience, including a minimum of two hundred hours of classroom and laboratory training, in basic radionuclide handling techniques applicable to the medical use of unsealed radioactive material requiring a written directive. The training and experience must include:

(a) Classroom and laboratory training in the following areas:

(i) Radiation physics and instrumentation;

(ii) Radiation protection;

(iii) Mathematics pertaining to the use and measurement of radioactivity;

(iv) Chemistry of radioactive material for medical use; and

(v) Radiation biology; and

(b) Work experience, under the supervision of an authorized user who meets the requirements in subsection (1) or (2) of this section, or equivalent U.S. NRC or agreement state requirements. A supervising authorized user, who meets the requirements in this subsection, must also have experience in administering dosages in the same dosage category or categories (i.e., this section) as the individual requesting authorized user status. The work experience must involve:

(i) Ordering, receiving, and unpacking radioactive materials safely and performing the related radiation surveys;

(ii) Performing quality control procedures on instruments used to determine the activity of dosages and performing checks for proper operation of survey meters;

(iii) Calculating, measuring, and safely preparing patient or human research subject dosages;

(iv) Using administrative controls to prevent a medical event involving the use of unsealed radioactive material;

(v) Using procedures to contain spilled radioactive material safely and using proper decontamination procedures;

(vi) Eluting generator systems, measuring and testing the eluate for radionuclidic purity, and processing the eluate with reagent kits to prepare labeled radioactive drugs; and

(vii) Administering dosages of radioactive drugs to patients or human research subjects involving a minimum of three cases in each of the following categories for which the individual is requesting authorized user status:

(A) Oral administration of less than or equal to 1.22 gigabecquerels (33 millicuries) of sodium iodide I-131 for which a written directive is required;

(B) Oral administration of greater than 1.22 gigabecquerels (33 millicuries) of sodium iodide I-131. Experience with at least three cases in this also satisfies the requirement in (b)(vii)(A) of this subsection;

(C) Parenteral administration of any beta emitter, or a photon-emitting radionuclide with a photon energy less than 150 keV for which a written directive is required; and/or

(D) Parenteral administration of any other radionuclide for which a written directive is required; and

(E) Has obtained written certification that the individual has satisfactorily completed the requirements in subsection (1)(a) and (b) of this section and has achieved a level of competency sufficient to function independently as an authorized user for the medical uses authorized under WAC 246-240-201. The written certification must be signed by a preceptor authorized user who meets the requirements in this section, or equivalent U.S. NRC or agreement state requirements. The preceptor authorized user, who meets the requirements in this subsection (2), must also have experience in administering dosages in the same dosage category or categories (i.e., this section) as the individual requesting authorized user status.

[Statutory Authority: RCW 70.98.050. 07-14-131, § 246-240-210, filed 7/3/07, effective 8/3/07; 06-05-019, § 246-240-210, filed 2/6/06, effective 3/9/06.]

WAC 246-240-213 Training for the oral administration of sodium iodide I-131 requiring a written directive in quantities less than or equal to 1.22 gigabecquerels (33 millicuries). Except as provided in WAC 246-240-078, the licensee shall require an authorized user for the oral administration of sodium iodide I-131 requiring a written directive in quantities less than or equal to 1.22 gigabecquerels (33 millicuries), to be a physician who:

(1) Is certified by a medical specialty board whose certification process includes all of the requirements in subsection (3) of this section and whose certification has been recognized by the department, the U.S. Nuclear Regulatory Commission or an agreement state. (Specialty boards whose certification process has been recognized by the commission or an agreement state will be posted on the NRC's web page at http://www.nrc.gov.); or

(2) Is an authorized user under WAC 246-240-210 for uses listed in WAC 246-240-210 (2)(b)(vii)(A) and (B), 246-240-216, or equivalent agreement state or U.S. NRC requirements; or

(3)(a) Has successfully completed eighty hours of classroom and laboratory training, applicable to the medical use of sodium iodide I-131 for procedures requiring a written directive. The training must include:

(i) Radiation physics and instrumentation;

(ii) Radiation protection;

(iii) Mathematics pertaining to the use and measurement of radioactivity;

(iv) Chemistry of radioactive material for medical use; and

(v) Radiation biology; and

(b) Has work experience, under the supervision of an authorized user who meets the requirements in WAC 246-240-210, 246-240-213, 246-240-216, or equivalent agreement state or U.S. NRC requirements. A supervising authorized user who meets the requirements in WAC 246-240-210(2), must also have experience in administering dosages as specified in WAC 246-240-210 (2)(b)(vii)(A) or (B). The work experience must involve:

(i) Ordering, receiving, and unpacking radioactive materials safely and performing the related radiation surveys;

(ii) Performing quality control procedures on instruments used to determine the activity of dosages and performing checks for proper operation of survey meters;

(iii) Calculating, measuring, and safely preparing patient or human research subject dosages;

(iv) Using administrative controls to prevent a medical event involving the use of radioactive material;

(v) Using procedures to contain spilled radioactive material safely and using proper decontamination procedures; and

(vi) Administering dosages to patients or human research subjects, that includes at least three cases involving the oral administration of less than or equal to 1.22 gigabecquerels (33 millicuries) of sodium iodide I-131; and

(c) Has obtained written certification that the individual has satisfactorily completed the requirements in (a) and (b) of this subsection and has achieved a level of competency sufficient to function independently as an authorized user for medical uses authorized under WAC 246-240-201. The written certification must be signed by a preceptor authorized user who meets the requirements in WAC 246-240-210, 246-240-213, 246-240-216, or equivalent agreement state or U.S. NRC requirements. A preceptor authorized user, who meets the requirement in WAC 246-240-210(2), must also have experience in administering dosages as specified in WAC 246-240-210 (2)(b)(vii)(A) or (B).

[Statutory Authority: RCW 70.98.050. 07-14-131, § 246-240-213, filed 7/3/07, effective 8/3/07; 06-05-019, § 246-240-213, filed 2/6/06, effective 3/9/06.]

WAC 246-240-216 Training for the oral administration of sodium iodide I-131 requiring a written directive in quantities greater than 1.22 gigabecquerels (33 millicuries). Except as provided in WAC 246-240-078, the licensee shall require an authorized user for the oral administration of sodium iodide I-131 requiring a written directive in quantities greater than 1.22 gigabecquerels (33 millicuries), to be a physician who:

(1) Is certified by a medical specialty board whose certification process includes all of the requirements in subsection (3) of this section and whose certification has been recognized by the department, the U.S. NRC or an agreement state. (Specialty boards whose certification process has been recognized by the commission or an agreement state will be posted on the NRC's web page at http://www.nrc.gov.); or

(2) Is an authorized user under WAC 246-240-210 for uses listed in WAC 246-240-210 (2)(b)(vii)(B), or equivalent agreement state or U.S. NRC requirements; or

(3)(a) Has successfully completed eighty hours of classroom and laboratory training, applicable to the medical use of sodium iodide I-131 for procedures requiring a written directive. The training must include:

(i) Radiation physics and instrumentation;

(ii) Radiation protection;

(iii) Mathematics pertaining to the use and measurement of radioactivity;

(iv) Chemistry of radioactive material for medical use; and

(v) Radiation biology; and

(b) Has work experience, under the supervision of an authorized user who meets the requirements in WAC 246-240-210, 246-240-216, or equivalent agreement state or U.S. NRC requirements. A supervising authorized user, who meets the requirements in WAC 246-240-210(2), must also have experience in administering dosages as specified in WAC 246-240-210 (2)(b)(vii)(B).

The work experience must involve:

(i) Ordering, receiving, and unpacking radioactive materials safely and performing the related radiation surveys;

(ii) Performing quality control procedures on instruments used to determine the activity of dosages and performing checks for proper operation of survey meters;

(iii) Calculating, measuring, and safely preparing patient or human research subject dosages;

(iv) Using administrative controls to prevent a medical event involving the use of radioactive material;

(v) Using procedures to contain spilled radioactive material safely and using proper decontamination procedures; and

(vi) Administering dosages to patients or human research subjects, that includes at least three cases involving the oral administration of greater than 1.22 gigabecquerels (33 millicuries) of sodium iodide I-131; and

(c) Has obtained written certification that the individual has satisfactorily completed the requirements in (a) and (b) of this subsection and has achieved a level of competency sufficient to function independently as an authorized user for medical uses authorized under WAC 246-240-201. The written certification must be signed by a preceptor authorized user who meets the requirements in WAC 246-240-210, 246-240-216, or equivalent agreement state or U.S. NRC requirements. A preceptor authorized user, who meets the requirements in WAC 246-240-210(2), must have experience in administering dosages as specified in WAC 246-240-210 (2)(b)(vii)(B).

[Statutory Authority: RCW 70.98.050. 07-14-131, § 246-240-216, filed 7/3/07, effective 8/3/07; 06-05-019, § 246-240-216, filed 2/6/06, effective 3/9/06.]

WAC 246-240-219 Training for the parenteral administration of unsealed radioactive material requiring a written directive. Except as provided in WAC 246-240-078, the licensee shall require an authorized user for the parenteral administration requiring a written directive, to be a physician who:

(1) Is an authorized user under WAC 246-240-210 for uses listed in WAC 246-240-210 (2)(b)(vii)(C) or (D), or equivalent agreement state or U.S. NRC requirements; or

(2) Is an authorized user under WAC 246-240-278 or 246-240-399, or equivalent agreement state or U.S. NRC requirements and who meets the requirements in subsection (4) of this section; or

(3) Is certified by a medical specialty board whose certification process has been recognized by the U.S. NRC or an agreement state under WAC 246-240-278 or 246-240-399, and who meets the requirements in subsection (4) of this section.

(4)(a) Has successfully completed eighty hours of classroom and laboratory training, applicable to parenteral administrations, for which a written directive is required, of any beta emitter or any photon-emitting radionuclide with a photon energy less than 150 keV, and/or parenteral administration of any other radionuclide for which a written directive is required. The training must include:

(i) Radiation physics and instrumentation;

(ii) Radiation protection;

(iii) Mathematics pertaining to the use and measurement of radioactivity;

(iv) Chemistry of radioactive material for medical use; and

(v) Radiation biology; and

(b) Has work experience, under the supervision of an authorized user who meets the requirements in WAC 246-240-210, 246-240-219, or equivalent agreement state or U.S. NRC requirements, in the parenteral administration, for which a written directive is required, of any beta emitter or any photon-emitting radionuclide with a photon energy less than 150 keV, and/or parenteral administration of any other radionuclide for which a written directive is required. A supervising authorized user who meets the requirements in WAC 246-240-210 must have experience in administering dosages as specified in WAC 246-240-210 (2)(b)(vii)(C) and/or (D). The work experience must involve:

(i) Ordering, receiving, and unpacking radioactive materials safely, and performing the related radiation surveys;

(ii) Performing quality control procedures on instruments used to determine the activity of dosages, and performing checks for proper operation of survey meters;

(iii) Calculating, measuring, and safely preparing patient or human research subject dosages;

(iv) Using administrative controls to prevent a medical event involving the use of unsealed radioactive material;

(v) Using procedures to contain spilled radioactive material safely, and using proper decontamination procedures; and

(vi) Administering dosages to patients or human research subjects, that include at least three cases involving the parenteral administration, for which a written directive is required, of any beta emitter, or any photon-emitting radionuclide with a photon energy less than 150 keV and/or at least three cases involving the parenteral administration of any other radionuclide, for which a written directive is required; and

(5) Has obtained written certification that the individual has satisfactorily completed the requirements in subsection (2) or (3) of this section, and has achieved a level of competency sufficient to function independently as an authorized user for the parenteral administration of unsealed radioactive material requiring a written directive. The written certification must be signed by a preceptor authorized user who meets the requirements in WAC 246-240-210, 246-240-219, or equivalent agreement state or U.S. NRC requirements. A preceptor authorized user, who meets the requirements in WAC 246-240-210, must have experience in administering dosages as specified in WAC 246-240-210 (2)(b)(vii)(C) and/or (D).

[Statutory Authority: RCW 70.98.050. 07-14-131, § 246-240-219, filed 7/3/07, effective 8/3/07; 06-05-019, § 246-240-219, filed 2/6/06, effective 3/9/06.]

WAC 246-240-251 Use of sources for manual brachytherapy. A licensee shall use only brachytherapy sources for therapeutic medical uses:

(1) As approved in the sealed source and device registry; or

(2) In research in accordance with an active investigational device exemption (IDE) application accepted by the FDA provided the requirements of WAC 246-240-066 are met.

[Statutory Authority: RCW 70.98.050. 06-05-019, § 246-240-251, filed 2/6/06, effective 3/9/06.]

WAC 246-240-254 Surveys after source implant and removal. (1) Immediately after implanting sources in a patient or a human research subject, the licensee shall make a survey to locate and account for all sources that have not been implanted.

(2) Immediately after removing the last temporary implant source from a patient or a human research subject, the licensee shall make a survey of the patient or the human research subject with a radiation detection survey instrument to confirm that all sources have been removed.

(3) A licensee shall retain a record of the surveys required by subsections (1) and (2) of this section in accordance with WAC 246-240-593.

[Statutory Authority: RCW 70.98.050. 06-05-019, § 246-240-254, filed 2/6/06, effective 3/9/06.]

WAC 246-240-260 Brachytherapy source accountability. (1) A licensee shall maintain accountability at all times for all brachytherapy sources in storage, transport, or use.

(2) As soon as possible after removing sources from a patient or a human research subject, a licensee shall return brachytherapy sources to a secure storage area.

(3) A licensee shall maintain a record of the brachytherapy source accountability in accordance with WAC 246-240-596.

[Statutory Authority: RCW 70.98.050. 06-05-019, § 246-240-260, filed 2/6/06, effective 3/9/06.]

WAC 246-240-263 Safety instruction. In addition to the requirements of WAC 246-222-030:

(1) The licensee shall provide radiation safety instruction, initially and at least annually, to personnel caring for patients or human research subjects who are receiving brachytherapy and cannot be released under WAC 246-240-

122. To satisfy this requirement, the instruction must be commensurate with the duties of the personnel and include the:

(a) Size and appearance of the brachytherapy sources;

(b) Safe handling and shielding instructions;

(c) Patient or human research subject control;

(d) Visitor control, including both:

(i) Routine visitation of hospitalized individuals in accordance with WAC 246-221-060 (1)(a); and

(ii) Visitation authorized in accordance with WAC 246-221-060(2); and

(e) Notification of the radiation safety officer, or their designee, and an authorized user if the patient or the human research subject has a medical emergency or dies.

(2) A licensee shall retain a record of individuals receiving instruction in accordance with WAC 246-240-590.

[Statutory Authority: RCW 70.98.050. 06-05-019, § 246-240-263, filed 2/6/06, effective 3/9/06.]

WAC 246-240-266 Safety precautions. (1) For each patient or human research subject who is receiving brachytherapy and cannot be released under WAC 246-240-122, a licensee shall:

(a) Not quarter the patient or the human research subject in the same room as an individual who is not receiving brachytherapy;

(b) Visibly post the patient's or human research subject's room with a "Caution—Radioactive Materials" sign; and

(c) Note on the door or in the patient's or human research subject's chart where and how long visitors may stay in the patient's or human research subject's room.

(2) A licensee shall have applicable emergency response equipment available near each treatment room to respond to a source:

(a) Dislodged from the patient; and

(b) Lodged within the patient following removal of the source applicators.

(3) A licensee shall notify the radiation safety officer, or their designee, and an authorized user as soon as possible if the patient or human research subject has a medical emergency or dies.

[Statutory Authority: RCW 70.98.050. 06-05-019, § 246-240-266, filed 2/6/06, effective 3/9/06.]

WAC 246-240-269 Calibration measurements of brachytherapy sources. (1) Before the first medical use of a brachytherapy source on or after March 9, 2006, a licensee shall have:

(a) Determined the source output or activity using a dosimetry system that meets the requirements of WAC 246-240-366(1);

(b) Determined source positioning accuracy within applicators; and

(c) Used published protocols currently accepted by nationally recognized bodies to meet the requirements of (a) and (b) of this subsection.

(2) A licensee may use measurements provided by the source manufacturer or by a calibration laboratory accredited by the American Association of Physicists in Medicine that are made in accordance with subsection (1) of this section.

(3) A licensee shall mathematically correct the outputs or activities determined in subsection (1) of this section for physical decay at intervals consistent with one percent physical decay.

(4) A licensee shall retain a record of each calibration in accordance with WAC 246-240-599.

[Statutory Authority: RCW 70.98.050. 07-14-131, § 246-240-269, filed 7/3/07, effective 8/3/07; 06-05-019, § 246-240-269, filed 2/6/06, effective 3/9/06.]

WAC 246-240-272 Decay of strontium-90 sources for ophthalmic treatments. (1) Only an authorized medical physicist shall calculate the activity of each strontium-90 source that is used to determine the treatment times for ophthalmic treatments. The decay must be based on the activity determined under WAC 246-240-269.

(2) A licensee shall retain a record of the activity of each strontium-90 source in accordance with WAC 246-240-602.

[Statutory Authority: RCW 70.98.050. 06-05-019, § 246-240-272, filed 2/6/06, effective 3/9/06.]

WAC 246-240-275 Therapy-related computer systems. The licensee shall perform acceptance testing on the treatment planning system of therapy-related computer systems in accordance with published protocols accepted by nationally recognized bodies. At a minimum, the acceptance testing must include, as applicable, verification of:

(1) The source-specific input parameters required by the dose calculation algorithm;

(2) The accuracy of dose, dwell time, and treatment time calculations at representative points;

(3) The accuracy of isodose plots and graphic displays; and

(4) The accuracy of the software used to determine sealed source positions from radiographic images.

[Statutory Authority: RCW 70.98.050. 06-05-019, § 246-240-275, filed 2/6/06, effective 3/9/06.]

WAC 246-240-278 Training for use of manual brachytherapy sources. Except as provided in WAC 246-240-078, the licensee shall require an authorized user of a manual brachytherapy source for the uses authorized under WAC 246-240-251 to be a physician who:

(1) Is certified by a medical specialty board whose certification process has been recognized by the department, the U.S. NRC, or an agreement state. (Specialty boards whose certification process has been recognized by the commission or an agreement state will be posted on the NRC's web page at http://www.nrc.gov.) To be recognized, a specialty board shall require all candidates for certification to:

(a) Successfully complete a minimum of three years of residency training in a radiation oncology program approved by the Residency Review Committee of the Accreditation Council for Graduate Medical Education or Royal College of Physicians and Surgeons of Canada or the Committee on Postgraduate Training of the American Osteopathic Association;

(b) Pass an examination, administered by diplomates of the specialty board, which tests knowledge and competence in radiation safety, radionuclide handling, treatment planning, quality assurance, and clinical use of high and low dose-rate brachytherapy; and

(c) Obtain written certification, signed by a preceptor authorized user who meets the requirements in WAC 246-240-278 or equivalent U.S. NRC or agreement state requirements, that the individual has achieved a level of competency sufficient to function independently as an authorized user of manual brachytherapy sources for the medical uses authorized in WAC 246-240-251; or

(2)(a) Has completed a structured educational program in basic radionuclide handling techniques applicable to the use of manual brachytherapy sources that includes:

(i) Two hundred hours of classroom and laboratory training in the following areas:

(A) Radiation physics and instrumentation;

(B) Radiation protection;

(C) Mathematics pertaining to the use and measurement of radioactivity; and

(D) Radiation biology; and

(ii) Five hundred hours of work experience, under the supervision of an authorized user who meets the requirements in WAC 246-240-278 or equivalent agreement state or U.S. NRC requirements at a medical institution, involving:

(A) Ordering, receiving, and unpacking radioactive materials safely and performing the related radiation surveys;

(B) Checking survey meters for proper operation;

(C) Preparing, implanting, and removing brachytherapy sources;

(D) Maintaining running inventories of material on hand;

(E) Using administrative controls to prevent a medical event involving the use of radioactive material;

(F) Using emergency procedures to control radioactive material; and

(b) Has completed three years of supervised clinical experience in radiation oncology, under an authorized user who meets the requirements in WAC 246-240-278 or equivalent U.S. NRC or agreement state requirements, as part of a formal training program approved by the Residency Review Committee for Radiation Oncology of the Accreditation Council for Graduate Medical Education or the Royal College of Physicians and Surgeons of Canada or the Committee on Postdoctoral Training of the American Osteopathic Association. This experience may be obtained concurrently with the supervised work experience required by (a)(ii) of this subsection; and

(c) Has obtained written certification, signed by a preceptor authorized user who meets the requirements in WAC 246-240-278 or equivalent agreement state or U.S. NRC requirements, that the individual has satisfactorily completed the requirements in subsection (1)(a) of this section, or (a) and (b) of this subsection and has achieved a level of competency sufficient to function independently as an authorized user of manual brachytherapy sources for the medical uses authorized under WAC 246-240-251.

[Statutory Authority: RCW 70.98.050. 07-14-131, § 246-240-278, filed 7/3/07, effective 8/3/07; 06-05-019, § 246-240-278, filed 2/6/06, effective 3/9/06.]

WAC 246-240-281 Training for ophthalmic use of strontium-90. Except as provided in WAC 246-240-078, the licensee shall require the authorized user of strontium-90 for ophthalmic radiotherapy to be a physician who:

(1) Is an authorized user under WAC 246-240-278 or equivalent agreement state or U.S. NRC requirements; or

(2)(a) Has completed twenty-four hours of classroom and laboratory training applicable to the medical use of strontium-90 for ophthalmic radiotherapy. The training must include:

(i) Radiation physics and instrumentation;

(ii) Radiation protection;

(iii) Mathematics pertaining to the use and measurement of radioactivity; and

(iv) Radiation biology; and

(b) Supervised clinical training in ophthalmic radiotherapy under the supervision of an authorized user at a medical institution that includes the use of strontium-90 for the ophthalmic treatment of five individuals.

This supervised clinical training must involve:

(i) Examination of each individual to be treated;

(ii) Calculation of the dose to be administered;

(iii) Administration of the dose; and

(iv) Follow up and review of each individual's case history; and

(c) Has obtained written certification, signed by a preceptor authorized user who meets the requirements in WAC 246-240-278, 246-240-281, or equivalent agreement state or U.S. NRC requirements, that the individual has satisfactorily completed the requirements in subsections (1) and (2) of this section and has achieved a level of competency sufficient to function independently as an authorized user of strontium-90 for ophthalmic use.

[Statutory Authority: RCW 70.98.050. 06-05-019, § 246-240-281, filed 2/6/06, effective 3/9/06.]

WAC 246-240-301 Use of sealed sources for diagnosis. A licensee shall use only sealed sources for diagnostic medical uses as approved in the sealed source and device registry.

[Statutory Authority: RCW 70.98.050. 06-05-019, § 246-240-301, filed 2/6/06, effective 3/9/06.]

WAC 246-240-304 Training for use of sealed sources for diagnosis. Except as provided in WAC 246-240-078, the licensee shall require the authorized user of a diagnostic sealed source for use in a device authorized under WAC 246-240-301 to be a physician, dentist, or podiatrist who:

(1) Is certified by a specialty board whose certification process includes all of the requirements in subsections (2) and (3) of this section and whose certification has been recognized by the Department, the U.S. NRC, or an agreement state. (Specialty boards whose certification process has been recognized by the commission or an agreement state will be posted on the NRC's web page at http://www.nrc.gov.); or

(2) Has completed eight hours of classroom and laboratory training in basic radionuclide handling techniques specifically applicable to the use of the device. The training must include:

(a) Radiation physics and instrumentation;

(b) Radiation protection;

(c) Mathematics pertaining to the use and measurement of radioactivity;

(d) Radiation biology; and

(3) Has completed training in the use of the device for the uses requested.

[Statutory Authority: RCW 70.98.050. 06-05-019, § 246-240-304, filed 2/6/06, effective 3/9/06.]

WAC 246-240-351 Use of a sealed source in a remote afterloader unit, teletherapy unit, or gamma stereotactic radiosurgery unit. A licensee shall use sealed sources in photon emitting remote afterloader units, teletherapy units, or gamma stereotactic radiosurgery units for therapeutic medical uses:

(1) As approved in the sealed source and device registry; or

(2) In research in accordance with an active investigational device exemption (IDE) application accepted by the FDA provided the requirements of WAC 246-240-066(1) are met.

[Statutory Authority: RCW 70.98.050. 06-05-019, § 246-240-351, filed 2/6/06, effective 3/9/06.]

WAC 246-240-354 Surveys of patients and human research subjects treated with a remote afterloader unit. (1) Before releasing a patient or a human research subject from licensee control, a licensee shall survey the patient or the human research subject and the remote afterloader unit with a portable radiation detection survey instrument to confirm that the source(s) has been removed from the patient or human research subject and returned to the safe shielded position.

(2) A licensee shall retain a record of these surveys in accordance with WAC 246-240-593.

[Statutory Authority: RCW 70.98.050. 06-05-019, § 246-240-354, filed 2/6/06, effective 3/9/06.]

WAC 246-240-357 Installation, maintenance, adjustment, and repair. (1) Only a person specifically licensed by the department, the U.S. NRC, or an agreement state shall install, maintain, adjust, or repair a remote afterloader unit, teletherapy unit, or gamma stereotactic radiosurgery unit that involves work on the source(s) shielding, the source(s) driving unit, or other electronic or mechanical component that could expose the source(s), reduce the shielding around the source(s), or compromise the radiation safety of the unit or the source(s).

(2) Except for low dose-rate remote afterloader units, only a person specifically licensed by the department, the U.S. NRC, or an agreement state shall install, replace, relocate, or remove a sealed source or source contained in other remote afterloader units, teletherapy units, or gamma stereotactic radiosurgery units.

(3) For a low dose-rate remote afterloader unit, only a person specifically licensed by the department, the U.S. NRC, or an agreement state or an authorized medical physicist shall install, replace, relocate, or remove a sealed source(s) contained in the unit.

(4) A licensee shall retain a record of the installation, maintenance, adjustment, and repair of remote afterloader units, teletherapy units, and gamma stereotactic radiosurgery units in accordance with WAC 246-240-605.

[Statutory Authority: RCW 70.98.050. 06-05-019, § 246-240-357, filed 2/6/06, effective 3/9/06.]

WAC 246-240-360 Safety procedures and instructions for remote afterloader units, teletherapy units, and gamma stereotactic radiosurgery units. (1) A licensee shall:

(a) Secure the unit, the console, the console keys, and the treatment room when not in use or unattended;

(b) Permit only individuals approved by the authorized user, radiation safety officer, or authorized medical physicist to be present in the treatment room during treatment with the source(s);

(c) Prevent dual operation of more than one radiation producing device in a treatment room if applicable; and

(d) Develop, implement, and maintain written procedures for responding to an abnormal situation when the operator is unable to place the source(s) in the shielded position, or remove the patient or human research subject from the radiation field with controls from outside the treatment room. These procedures must include:

(i) Instructions for responding to equipment failures and the names of the individuals responsible for implementing corrective actions;

(ii) The process for restricting access to and posting of the treatment area to minimize the risk of inadvertent exposure; and

(iii) The names and telephone numbers of the authorized users, the authorized medical physicist, and the radiation safety officer to be contacted if the unit or console operates abnormally.

(2) A copy of the procedures required by subsection (1)(d) of this section must be physically located at the unit console.

(3) A licensee shall post instructions at the unit console to inform the operator of:

(a) The location of the procedures required by subsection (1)(d) of this section; and

(b) The names and telephone numbers of the authorized users, the authorized medical physicist, and the radiation safety officer to be contacted if the unit or console operates abnormally.

(4) A licensee shall provide instruction, initially and at least annually, to all individuals who operate the unit, as appropriate to the individual's assigned duties, in:

(a) The procedures identified in subsection (1)(d) of this section; and

(b) The operating procedures for the unit.

(5) A licensee shall ensure that operators, authorized medical physicists, and authorized users participate in drills of the emergency procedures, initially and at least annually.

(6) A licensee shall retain a record of individuals receiving instruction required by subsection (4) of this section, in accordance with WAC 246-240-590.

(7) A licensee shall retain a copy of the procedures required by subsections (1)(d) and (4)(b) of this section in accordance with WAC 246-240-608.

[Statutory Authority: RCW 70.98.050. 06-05-019, § 246-240-360, filed 2/6/06, effective 3/9/06.]

WAC 246-240-363 Safety precautions for remote afterloader units, teletherapy units, and gamma stereotactic radiosurgery units. (1) A licensee shall control access to the treatment room by a door at each entrance.

(2) A licensee shall equip each entrance to the treatment room with an electrical interlock system that will:

(a) Prevent the operator from initiating the treatment cycle unless each treatment room entrance door is closed;

(b) Cause the source(s) to be shielded when an entrance door is opened; and

(c) Prevent the source(s) from being exposed following an interlock interruption until all treatment room entrance doors are closed and the source(s) on-off control is reset at the console.

(3) A licensee shall require any individual entering the treatment room to assure, through the use of appropriate radiation monitors, that radiation levels have returned to ambient levels.

(4) Except for low-dose remote afterloader units, a licensee shall construct or equip each treatment room with viewing and intercom systems to permit continuous observation of the patient or the human research subject from the treatment console during irradiation.

(5) For licensed activities where sources are placed within the patient's or human research subject's body, a licensee shall only conduct treatments which allow for expeditious removal of a decoupled or jammed source.

(6) In addition to the requirements specified in subsections (1) through (5) of this section, a licensee shall:

(a) For *medium dose-rate and pulsed dose-rate remote afterloader units*, require:

(i) An authorized medical physicist and either an authorized user or a physician, under the supervision of an authorized user, who has been trained in the operation and emergency response for the unit to be physically present during the initiation of all patient treatments involving the unit; and

(ii) An authorized medical physicist and either an authorized user or an individual, under the supervision of an authorized user, who has been trained to remove the source applicator(s) in the event of an emergency involving the unit, to be immediately available during continuation of all patient treatments involving the unit.

(b) For *high dose-rate remote afterloader units*, require:

(i) An authorized user and an authorized medical physicist to be physically present during the initiation of all patient treatments involving the unit; and

(ii) An authorized medical physicist and either an authorized user or a physician, under the supervision of an authorized user, who has been trained in the operation and emergency response for the unit, to be physically present during continuation of all patient treatments involving the unit.

(c) For *gamma stereotactic radiosurgery units*, require an authorized user and an authorized medical physicist to be physically present throughout all patient treatments involving the unit.

(d) Notify the radiation safety officer, or their designee, and an authorized user as soon as possible if the patient or human research subject has a medical emergency or dies.

(7) A licensee shall have applicable emergency response equipment available near each treatment room to respond to a source:

(a) Remaining in the unshielded position; or

(b) Lodged within the patient following completion of the treatment.

[Statutory Authority: RCW 70.98.050. 06-05-019, § 246-240-363, filed 2/6/06, effective 3/9/06.]

WAC 246-240-366 Dosimetry equipment. (1) Except for low dose-rate remote afterloader sources where the source output or activity is determined by the manufacturer, a licensee shall have a calibrated dosimetry system available for use. To satisfy this requirement, one of the following two conditions must be met:

(a) The system must have been calibrated using a system or source traceable to the National Institute of Science and Technology (NIST) and published protocols accepted by nationally recognized bodies; or by a calibration laboratory accredited by the American Association of Physicists in Medicine (AAPM). The calibration must have been performed within the previous two years and after any servicing that may have affected system calibration; or

(b) The system must have been calibrated within the previous four years. Eighteen to thirty months after that calibration, the system must have been intercompared with another dosimetry system that was calibrated within the past twenty-four months by NIST or by a calibration laboratory accredited by the AAPM. The results of the intercomparison must indicate that the calibration factor of the licensee's system had not changed by more than two percent. The licensee may not use the intercomparison result to change the calibration factor. When intercomparing dosimetry systems to be used for calibrating sealed sources for therapeutic units, the licensee shall use a comparable unit with beam attenuators or collimators, as applicable, and sources of the same radionuclide as the source used at the licensee's facility.

(2) The licensee shall have a dosimetry system available for use for spot-check output measurements, if applicable. To satisfy this requirement, the system may be compared with a system that has been calibrated in accordance with subsection (1) of this section. This comparison must have been performed within the previous year and after each servicing that may have affected system calibration. The spot-check system may be the same system used to meet the requirement in subsection (1) of this section.

(3) The licensee shall retain a record of each calibration, intercomparison, and comparison in accordance with WAC 246-240-611.

[Statutory Authority: RCW 70.98.050. 06-05-019, § 246-240-366, filed 2/6/06, effective 3/9/06.]

WAC 246-240-369 Full calibration measurements on teletherapy units. (1) A licensee authorized to use a teletherapy unit for medical use shall perform full calibration measurements on each teletherapy unit:

(a) Before the first medical use of the unit; and

(b) Before medical use under the following conditions:

(i) Whenever spot-check measurements indicate that the output differs by more than five percent from the output obtained at the last full calibration corrected mathematically for radioactive decay;

(ii) Following replacement of the source or following reinstallation of the teletherapy unit in a new location;

(iii) Following any repair of the teletherapy unit that includes removal of the source or major repair of the components associated with the source exposure assembly; and

(c) At intervals not exceeding one year.

(2) To satisfy the requirement of subsection (1) of this section, full calibration measurements must include determination of:

(a) The output within ±3 percent for the range of field sizes and for the distance or range of distances used for medical use;

(b) The coincidence of the radiation field and the field indicated by the light beam localizing device;

(c) The uniformity of the radiation field and its dependence on the orientation of the useful beam;

(d) Timer accuracy and linearity over the range of use;

(e) On-off error; and

(f) The accuracy of all distance measuring and localization devices in medical use.

(3) A licensee shall use the dosimetry system described in WAC 246-240-366(1) to measure the output for one set of exposure conditions. The remaining radiation measurements required in subsection (2)(a) of this section may be made using a dosimetry system that indicates relative dose rates.

(4) A licensee shall make full calibration measurements required by subsection (1) of this section in accordance with published protocols accepted by nationally recognized bodies.

(5) A licensee shall mathematically correct the outputs determined in subsection (2)(a) of this section for physical decay for intervals not exceeding one month for cobalt-60, six months for cesium-137, or at intervals consistent with one percent decay for all other nuclides.

(6) Full calibration measurements required by subsection (1) of this section and physical decay corrections required by subsection (5) of this section must be performed by the authorized medical physicist.

(7) A licensee shall retain a record of each calibration in accordance with WAC 246-240-614.

[Statutory Authority: RCW 70.98.050. 06-05-019, § 246-240-369, filed 2/6/06, effective 3/9/06.]

WAC 246-240-372 Full calibration measurements on remote afterloader units. (1) A licensee authorized to use a remote afterloader unit for medical use shall perform full calibration measurements on each unit:

(a) Before the first medical use of the unit;

(b) Before medical use under the following conditions:

(i) Following replacement of the source or following reinstallation of the unit in a new location outside the facility; and

(ii) Following any repair of the unit that includes removal of the source or major repair of the components associated with the source exposure assembly; and

(c) At intervals not exceeding one calendar quarter for high dose-rate, medium dose-rate, and pulsed dose-rate remote afterloader units with sources whose half-life exceeds seventy-five days; and

(d) At intervals not exceeding one year for low dose-rate remote afterloader units.

(2) To satisfy the requirement of subsection (1) of this section, full calibration measurements must include, as applicable, determination of:

(a) The output within ±5 percent;

(b) Source positioning accuracy to within ±1 millimeter;

(c) Source retraction with backup battery upon power failure;

(d) Length of the source transfer tubes;

(e) Timer accuracy and linearity over the typical range of use;

(f) Length of the applicators; and

(g) Function of the source transfer tubes, applicators, and transfer tube-applicator interfaces.

(3) A licensee shall use the dosimetry system described in WAC 246-240-366(1) to measure the output.

(4) A licensee shall make full calibration measurements required by subsection (1) of this section in accordance with published protocols accepted by nationally recognized bodies.

(5) In addition to the requirements for full calibrations for low dose-rate remote afterloader units in subsection (2) of this section, a licensee shall perform an autoradiograph of the source(s) to verify inventory and source(s) arrangement at intervals not exceeding one calendar quarter.

(6) For low dose-rate remote afterloader units, a licensee may use measurements provided by the source manufacturer that are made in accordance with subsections (1) through (5) of this section.

(7) A licensee shall mathematically correct the outputs determined in subsection (2)(a) of this section for physical decay at intervals consistent with one percent physical decay.

(8) Full calibration measurements required by subsection (1) of this section and physical decay corrections required by subsection (7) of this section must be performed by the authorized medical physicist.

(9) A licensee shall retain a record of each calibration in accordance with WAC 246-240-614.

[Statutory Authority: RCW 70.98.050. 06-05-019, § 246-240-372, filed 2/6/06, effective 3/9/06.]

WAC 246-240-375 Full calibration measurements on gamma stereotactic radiosurgery units. (1) A licensee authorized to use a gamma stereotactic radiosurgery unit for medical use shall perform full calibration measurements on each unit:

(a) Before the first medical use of the unit;

(b) Before medical use under the following conditions:

(i) Whenever spot-check measurements indicate that the output differs by more than five percent from the output obtained at the last full calibration corrected mathematically for radioactive decay;

(ii) Following replacement of the sources or following reinstallation of the gamma stereotactic radiosurgery unit in a new location; and

(iii) Following any repair of the gamma stereotactic radiosurgery unit that includes removal of the sources or major repair of the components associated with the source assembly; and

(c) At intervals not exceeding one year, with the exception that relative helmet factors need only be determined before the first medical use of a helmet and following any damage to a helmet.

(2) To satisfy the requirement of subsection (1) of this section, full calibration measurements must include determination of:

(a) The output within ±3 percent;

(b) Relative helmet factors;

(c) Isocenter coincidence;

(d) Timer accuracy and linearity over the range of use;

(e) On-off error;

(f) Trunnion centricity;

(g) Treatment table retraction mechanism, using backup battery power or hydraulic backups with the unit off;

(h) Helmet microswitches;

(i) Emergency timing circuits; and

(j) Stereotactic frames and localizing devices (trunnions).

(3) A licensee shall use the dosimetry system described in WAC 246-240-366(1) to measure the output for one set of exposure conditions. The remaining radiation measurements required in subsection (2)(a) of this section may be made using a dosimetry system that indicates relative dose rates.

(4) A licensee shall make full calibration measurements required by subsection (1) of this section in accordance with published protocols accepted by nationally recognized bodies.

(5) A licensee shall mathematically correct the outputs determined in subsection (2)(a) of this section at intervals not exceeding one month for cobalt-60 and at intervals consistent with one percent physical decay for all other radionuclides.

(6) Full calibration measurements required by subsection (1) of this section and physical decay corrections required by subsection (5) of this section must be performed by the authorized medical physicist.

(7) A licensee shall retain a record of each calibration in accordance with WAC 246-240-614.

[Statutory Authority: RCW 70.98.050. 06-05-019, § 246-240-375, filed 2/6/06, effective 3/9/06.]

WAC 246-240-378 Periodic spot-checks for teletherapy units. (1) A licensee authorized to use teletherapy units for medical use shall perform output spot-checks on each teletherapy unit once in each calendar month that include determination of:

(a) Timer accuracy, and timer linearity over the range of use;

(b) On-off error;

(c) The coincidence of the radiation field and the field indicated by the light beam localizing device;

(d) The accuracy of all distance measuring and localization devices used for medical use;

(e) The output for one typical set of operating conditions measured with the dosimetry system described in WAC 246-240-366(2); and

(f) The difference between the measurement made in (e) of this subsection and the anticipated output, expressed as a percentage of the anticipated output (i.e., the value obtained at last full calibration corrected mathematically for physical decay).

(2) A licensee shall perform measurements required by subsection (1) of this section in accordance with written procedures established by the authorized medical physicist. That individual need not actually perform the spot-check measurements.

(3) A licensee shall have the authorized medical physicist review the results of each spot-check within fifteen days. The authorized medical physicist shall notify the licensee as soon as possible in writing of the results of each spot-check.

(4) A licensee authorized to use a teletherapy unit for medical use shall perform safety spot-checks of each teletherapy facility once in each calendar month and after each source installation to assure proper operation of:

(a) Electrical interlocks at each teletherapy room entrance;

(b) Electrical or mechanical stops installed for the purpose of limiting use of the primary beam of radiation (restriction of source housing angulation or elevation, carriage or stand travel and operation of the beam on-off mechanism);

(c) Source exposure indicator lights on the teletherapy unit, on the control console, and in the facility;

(d) Viewing and intercom systems;

(e) Treatment room doors from inside and outside the treatment room; and

(f) Electrically assisted treatment room doors with the teletherapy unit electrical power turned off.

(5) If the results of the checks required in subsection (4) of this section indicate the malfunction of any system, a licensee shall lock the control console in the off position and not use the unit except as may be necessary to repair, replace, or check the malfunctioning system.

(6) A licensee shall retain a record of each spot-check required by subsections (1) and (4) of this section, and a copy of the procedures required by subsection (2) of this section, in accordance with WAC 246-240-617.

[Statutory Authority: RCW 70.98.050. 06-05-019, § 246-240-378, filed 2/6/06, effective 3/9/06.]

WAC 246-240-381 Periodic spot-checks for remote afterloader units. (1) A licensee authorized to use a remote afterloader unit for medical use shall perform spot-checks of each remote afterloader facility and on each unit:

(a) Before the first use of a high dose-rate, medium dose-rate, or pulsed dose-rate remote afterloader unit on a given day;

(b) Before each patient treatment with a low dose-rate remote afterloader unit; and

(c) After each source installation.

(2) A licensee shall perform the measurements required by subsection (1) of this section in accordance with written procedures established by the authorized medical physicist. That individual need not actually perform the spot check measurements.

(3) A licensee shall have the authorized medical physicist review the results of each spot-check within fifteen days. The authorized medical physicist shall notify the licensee as soon as possible in writing of the results of each spot-check.

(4) To satisfy the requirements of subsection (1) of this section, spot-checks must, at a minimum, assure proper operation of:

(a) Electrical interlocks at each remote afterloader unit room entrance;

(b) Source exposure indicator lights on the remote afterloader unit, on the control console, and in the facility;

(c) Viewing and intercom systems in each high dose-rate, medium dose-rate, and pulsed dose-rate remote afterloader facility;

(d) Emergency response equipment;

(e) Radiation monitors used to indicate the source position;

(f) Timer accuracy;

(g) Clock (date and time) in the unit's computer; and

(h) Decayed source(s) activity in the unit's computer.

(5) If the results of the checks required in subsection (4) of this section indicate the malfunction of any system, a licensee shall lock the control console in the off position and not use the unit except as may be necessary to repair, replace, or check the malfunctioning system.

(6) A licensee shall retain a record of each check required by subsection (4) of this section and a copy of the procedures required by subsection (2) of this section in accordance with WAC 246-240-620.

[Statutory Authority: RCW 70.98.050. 06-05-019, § 246-240-381, filed 2/6/06, effective 3/9/06.]

WAC 246-240-384 Periodic spot-checks for gamma stereotactic radiosurgery units. (1) A licensee authorized to use a gamma stereotactic radiosurgery unit for medical use shall perform spot-checks of each gamma stereotactic radiosurgery facility and on each unit:

(a) Monthly;

(b) Before the first use of the unit on a given day; and

(c) After each source installation.

(2) A licensee shall:

(a) Perform the measurements required by subsection (1) of this section in accordance with written procedures established by the authorized medical physicist. That individual need not actually perform the spot check measurements.

(b) Have the authorized medical physicist review the results of each spot-check within fifteen days. The authorized medical physicist shall notify the licensee as soon as possible in writing of the results of each spot-check.

(3) To satisfy the requirements of subsection (1)(a) of this section, spot-checks must, at a minimum:

(a) Assure proper operation of:

(i) Treatment table retraction mechanism, using backup battery power or hydraulic backups with the unit off;

(ii) Helmet microswitches;

(iii) Emergency timing circuits; and

(iv) Stereotactic frames and localizing devices (trunnions).

(b) Determine:

(i) The output for one typical set of operating conditions measured with the dosimetry system described in WAC 246-240-366(2);

(ii) The difference between the measurement made in (b)(i) of this subsection and the anticipated output, expressed as a percentage of the anticipated output (i.e., the value obtained at last full calibration corrected mathematically for physical decay);

(iii) Source output against computer calculation;

(iv) Timer accuracy and linearity over the range of use;

(v) On-off error; and

(vi) Trunnion centricity.

(4) To satisfy the requirements of subsection (1)(b) and (c) of this section, spot-checks must assure proper operation of:

(a) Electrical interlocks at each gamma stereotactic radiosurgery room entrance;

(b) Source exposure indicator lights on the gamma stereotactic radiosurgery unit, on the control console, and in the facility;

(c) Viewing and intercom systems;

(d) Timer termination;

(e) Radiation monitors used to indicate room exposures; and

(f) Emergency off buttons.

(5) A licensee shall arrange for the repair of any system identified in subsection (3) of this section that is not operating properly as soon as possible.

(6) If the results of the checks required in subsection (4) of this section indicate the malfunction of any system, a licensee shall lock the control console in the off position and not use the unit except as may be necessary to repair, replace, or check the malfunctioning system.

(7) A licensee shall retain a record of each check required by subsections (3) and (4) of this section and a copy of the procedures required by subsection (2) of this section in accordance with WAC 246-240-623.

[Statutory Authority: RCW 70.98.050. 06-05-019, § 246-240-384, filed 2/6/06, effective 3/9/06.]

WAC 246-240-387 Additional technical requirements for mobile remote afterloader units. (1) A licensee providing mobile remote afterloader service shall:

(a) Check survey instruments before medical use at each address of use or on each day of use, whichever is more frequent; and

(b) Account for all sources before departure from a client's address of use.

(2) In addition to the periodic spot-checks required by WAC 246-240-381, a licensee authorized to use mobile afterloaders for medical use shall perform checks on each remote afterloader unit before use at each address of use. At a minimum, checks must be made to verify the operation of:

(a) Electrical interlocks on treatment area access points;

(b) Source exposure indicator lights on the remote afterloader unit, on the control console, and in the facility;

(c) Viewing and intercom systems;

(d) Applicators, source transfer tubes, and transfer tube-applicator interfaces;

(e) Radiation monitors used to indicate room exposures;

(f) Source positioning (accuracy); and

(g) Radiation monitors used to indicate whether the source has returned to a safe shielded position.

(3) In addition to the requirements for checks in subsection (2) of this section, a licensee shall ensure overall proper operation of the remote afterloader unit by conducting a simulated cycle of treatment before use at each address of use.

(4) If the results of the checks required in subsection (2) of this section indicate the malfunction of any system, a licensee shall lock the control console in the off position and not use the unit except as may be necessary to repair, replace, or check the malfunctioning system.

(5) A licensee shall retain a record of each check required by subsection (2) of this section in accordance with WAC 246-240-626.

[Statutory Authority: RCW 70.98.050. 06-05-019, § 246-240-387, filed 2/6/06, effective 3/9/06.]

WAC 246-240-390 Radiation surveys. (1) In addition to the survey requirement in WAC 246-221-110(1), a person licensed under this chapter shall make surveys to ensure that the maximum radiation levels and average radiation levels from the surface of the main source safe with the source(s) in the shielded position do not exceed the levels stated in the sealed source and device registry.

(2) The licensee shall make the survey required by subsection (1) of this section at installation of a new source and following repairs to the source(s) shielding, the source(s) driving unit, or other electronic or mechanical component that could expose the source, reduce the shielding around the source(s), or compromise the radiation safety of the unit or the source(s).

(3) A licensee shall retain a record of the radiation surveys required by subsection (1) of this section in accordance with WAC 246-240-629.

[Statutory Authority: RCW 70.98.050. 06-05-019, § 246-240-390, filed 2/6/06, effective 3/9/06.]

WAC 246-240-393 Five-year inspection for teletherapy and gamma stereotactic radiosurgery units. (1) A licensee shall have each teletherapy unit and gamma stereotactic radiosurgery unit fully inspected and serviced during source replacement or at intervals not to exceed five years, whichever comes first, to assure proper functioning of the source exposure mechanism.

(2) This inspection and servicing may only be performed by persons specifically licensed to do so by the department, the U.S. NRC or an agreement state.

(3) A licensee shall keep a record of the inspection and servicing in accordance with WAC 246-240-632.

[Statutory Authority: RCW 70.98.050. 06-05-019, § 246-240-393, filed 2/6/06, effective 3/9/06.]

WAC 246-240-396 Therapy-related computer systems. The licensee shall perform acceptance testing on the treatment planning system of therapy-related computer systems in accordance with published protocols accepted by nationally recognized bodies. At a minimum, the acceptance testing must include, as applicable, verification of:

(1) The source-specific input parameters required by the dose calculation algorithm;

(2) The accuracy of dose, dwell time, and treatment time calculations at representative points;

(3) The accuracy of isodose plots and graphic displays;

(4) The accuracy of the software used to determine sealed source positions from radiographic images; and

(5) The accuracy of electronic transfer of the treatment delivery parameters to the treatment delivery unit from the treatment planning system.

[Statutory Authority: RCW 70.98.050. 06-05-019, § 246-240-396, filed 2/6/06, effective 3/9/06.]

WAC 246-240-399 Training for use of remote afterloader units, teletherapy units, and gamma stereotactic radiosurgery units. Except as provided in WAC 246-240-078, the licensee shall require an authorized user of a sealed source for a use authorized under WAC 246-240-351 to be a physician who:

(1) Is certified by a medical specialty board whose certification process has been recognized by the department, the U.S. NRC, or an agreement state. (Specialty boards whose certification process has been recognized by the NRC or an agreement state will be posted on the NRC's web page at http://www.nrc.gov.) To be recognized, a specialty board shall require all candidates for certification to:

(a) Successfully complete a minimum of three years of residency training in a radiation therapy program approved by the Residency Review Committee of the Accreditation Council for Graduate Medical Education or Royal College of Physicians and Surgeons of Canada or the Committee on Postgraduate Training of the American Osteopathic Association; and

(b) Pass an examination, administered by diplomates of the specialty board, which tests knowledge and competence in radiation safety, radionuclide handling, treatment planning, quality assurance, and clinical use of stereotactic radiosurgery, high and low dose-rate brachytherapy, and external beam therapy;

(2)(a) Has completed a structured educational program in basic radionuclide techniques applicable to the use of a sealed source in a therapeutic medical unit that includes:

(i) Two hundred hours of classroom and laboratory training in the following areas:

(A) Radiation physics and instrumentation;

(B) Radiation protection;

(C) Mathematics pertaining to the use and measurement of radioactivity; and

(D) Radiation biology; and

(ii) Five hundred hours of work experience, under the supervision of an authorized user who meets the requirements in WAC 246-240-399 or equivalent agreement state or U.S. NRC requirements at a medical institution, involving:

(A) Reviewing full calibration measurements and periodic spot-checks;

(B) Preparing treatment plans and calculating treatment doses and times;

(C) Using administrative controls to prevent a medical event involving the use of radioactive material;

(D) Implementing emergency procedures to be followed in the event of the abnormal operation of the medical unit or console;

(E) Checking and using survey meters; and

(F) Selecting the proper dose and how it is to be administered; and

(b) Has completed three years of supervised clinical experience in radiation therapy, under an authorized user who meets the requirements in WAC 246-240-399 or equivalent U.S. NRC or agreement state requirements, as part of a formal training program approved by the Residency Review Committee for Radiation Oncology of the Accreditation Council for Graduate Medical Education or Royal College of Physicians and Surgeons of Canada or the Committee on Postdoctoral Training of the American Osteopathic Associa-

tion. This experience may be obtained concurrently with the supervised work experience required by (a)(ii) of this subsection; and

(c) Has obtained written certification that the individual has satisfactorily completed the requirements in subsection (1)(a) of this section, or (a) and (b), and (d) of this subsection and has achieved a level of competency sufficient to function independently as an authorized user of each type of therapeutic medical unit for which the individual is requesting authorized user status. The written certification must be signed by a preceptor authorized user who meets the requirements in WAC 246-240-399 or equivalent U.S. NRC or agreement state requirements for an authorized user for each type of therapeutic medical unit for which the individual is requesting authorized user status; and

(d) Has received training in device operation, safety procedures, and clinical use for the type(s) of use for which authorization is sought. This training requirement may be satisfied by satisfactory completion of a training program provided by the vendor for new users or by receiving training supervised by an authorized user or authorized medical physicist, as appropriate, who is authorized for the type(s) of use for which the individual is seeking authorization.

[Statutory Authority: RCW 70.98.050. 07-14-131, § 246-240-399, filed 7/3/07, effective 8/3/07; 06-05-019, § 246-240-399, filed 2/6/06, effective 3/9/06.]

WAC 246-240-501 Other medical uses of radioactive material or radiation from radioactive material. A licensee may use radioactive material or a radiation source approved for medical use which is not specifically addressed in WAC 246-240-251 through 246-240-399 (inclusive) if:

(1) The applicant or licensee has submitted the information required by WAC 246-240-019; and

(2) The applicant or licensee has received written approval from the department in a license or license amendment and uses the material in accordance with the regulations and specific conditions the department considers necessary for the medical use of the material.

[Statutory Authority: RCW 70.98.050. 06-05-019, § 246-240-501, filed 2/6/06, effective 3/9/06.]

WAC 246-240-551 Records of authority and responsibilities for radiation protection programs. (1) A licensee shall retain a record of actions taken by the licensee's management in accordance with WAC 246-240-051(1) for five years. The record must include a summary of the actions taken and a signature of licensee management.

(2) The licensee shall retain a copy of both authority, duties, and responsibilities of the radiation safety officer as required by WAC 246-240-051(5), and a signed copy of each radiation safety officer's agreement to be responsible for implementing the radiation safety program, as required by WAC 246-240-051(2), for the duration of the license. The records must include the signature of the radiation safety officer and licensee management.

[Statutory Authority: RCW 70.98.050. 06-05-019, § 246-240-551, filed 2/6/06, effective 3/9/06.]

WAC 246-240-554 Records of radiation protection program changes. A licensee shall retain a record of each radiation protection program change made in accordance with WAC 246-240-054(1) for five years. The record must include a copy of the old and new procedures; the effective date of the change; and the signature of the licensee management that reviewed and approved the change.

[Statutory Authority: RCW 70.98.050. 06-05-019, § 246-240-554, filed 2/6/06, effective 3/9/06.]

WAC 246-240-557 Records of written directives. A licensee shall retain a copy of each written directive as required by WAC 246-240-060 for three years.

[Statutory Authority: RCW 70.98.050. 06-05-019, § 246-240-557, filed 2/6/06, effective 3/9/06.]

WAC 246-240-560 Records for procedures for administrations requiring a written directive. A licensee shall retain a copy of the procedures required by WAC 246-240-063(1) for the duration of the license.

[Statutory Authority: RCW 70.98.050. 06-05-019, § 246-240-560, filed 2/6/06, effective 3/9/06.]

WAC 246-240-563 Records of calibrations of instruments used to measure the activity of unsealed radioactive material. A licensee shall maintain a record of instrument calibrations required by WAC 246-240-101 for three years. The records must include the model and serial number of the instrument, the date of the calibration, the results of the calibration, and the name of the individual who performed the calibration.

[Statutory Authority: RCW 70.98.050. 06-05-019, § 246-240-563, filed 2/6/06, effective 3/9/06.]

WAC 246-240-566 Records of radiation survey instrument calibrations. A licensee shall maintain a record of radiation survey instrument calibrations required by WAC 246-240-104 for three years. The record must include the model and serial number of the instrument, the date of the calibration, the results of the calibration, and the name of the individual who performed the calibration.

[Statutory Authority: RCW 70.98.050. 06-05-019, § 246-240-566, filed 2/6/06, effective 3/9/06.]

WAC 246-240-569 Records of dosages of unsealed radioactive material for medical use. (1) A licensee shall maintain a record of dosage determinations required by WAC 246-240-107 for three years.

(2) The record must contain:

(a) The radiopharmaceutical;

(b) The patient's or human research subject's name, or identification number if one has been assigned;

(c) The prescribed dosage, the determined dosage, or a notation that the total activity is less than 1.1 MBq (30 μCi);

(d) The date and time of the dosage determination; and

(e) The name of the individual who determined the dosage.

[Statutory Authority: RCW 70.98.050. 06-05-019, § 246-240-569, filed 2/6/06, effective 3/9/06.]

WAC 246-240-572 Records of leak tests and inventory of sealed sources and brachytherapy sources. (1) A

licensee shall retain records of leak tests required by WAC 246-240-113 for three years. The records must include the model number, and serial number if one has been assigned, of each source tested; the identity of each source by radionuclide and its estimated activity; the results of the test; the date of the test; and the name of the individual who performed the test.

(2) A licensee shall retain records of the semiannual physical inventory of sealed sources and brachytherapy sources required by WAC 246-240-113 for three years. The inventory records must contain the model number of each source, and serial number if one has been assigned, the identity of each source by radionuclide and its nominal activity, the location of each source, and the name of the individual who performed the inventory.

[Statutory Authority: RCW 70.98.050. 06-05-019, § 246-240-572, filed 2/6/06, effective 3/9/06.]

WAC 246-240-575 Records of surveys for ambient radiation exposure rate. A licensee shall retain a record of each survey required by WAC 246-240-119 for three years. The record must include the date of the survey, the results of the survey, the instrument used to make the survey, and the name of the individual who performed the survey.

[Statutory Authority: RCW 70.98.050. 06-05-019, § 246-240-575, filed 2/6/06, effective 3/9/06.]

WAC 246-240-578 Records of the release of individuals containing unsealed radioactive material or implants containing radioactive material. (1) A licensee shall retain a record of the basis for authorizing the release of an individual in accordance with WAC 246-240-122, if the total effective dose equivalent is calculated by:

(a) Using the retained activity rather than the activity administered;

(b) Using an occupancy factor less than 0.25 at 1 meter;

(c) Using the biological or effective half-life; or

(d) Considering the shielding by tissue.

(2) A licensee shall retain a record that the instructions required by WAC 246-240-122(2) were provided to a breast-feeding female if the radiation dose to the infant or child from continued breast-feeding could result in a total effective dose equivalent exceeding 5 mSv (0.5 rem).

(3) The records required by subsections (1) and (2) of this section must be retained for three years after the date of release of the individual.

[Statutory Authority: RCW 70.98.050. 06-05-019, § 246-240-578, filed 2/6/06, effective 3/9/06.]

WAC 246-240-581 Records of mobile medical services. (1) A licensee shall retain a copy of each letter that permits the use of radioactive material at a client's address, as required by WAC 246-240-125. Each letter must clearly delineate the authority and responsibility of the licensee and the client and must be retained for three years after the last provision of service.

(2) A licensee shall retain the record of each survey required by WAC 246-240-125 (1)(d) for three years. The record must include the date of the survey, the results of the survey, the instrument used to make the survey, and the name of the individual who performed the survey.

[Statutory Authority: RCW 70.98.050. 06-05-019, § 246-240-581, filed 2/6/06, effective 3/9/06.]

WAC 246-240-584 Records of decay-in-storage. A licensee shall maintain records of the disposal of licensed materials, as required by WAC 246-240-128, for three years. The record must include the date of the disposal, the survey instrument used, the background radiation level, the radiation level measured at the surface of each waste container, and the name of the individual who performed the survey.

[Statutory Authority: RCW 70.98.050. 06-05-019, § 246-240-584, filed 2/6/06, effective 3/9/06.]

WAC 246-240-587 Records of molybdenum-99 concentrations. A licensee shall maintain a record of the molybdenum-99 concentration tests required by WAC 246-240-160(2) for three years. The record must include, for each measured elution of technetium-99m, the ratio of the measures expressed as kilobecquerel of molybdenum-99 per megabecquerel of technetium-99m (or microcuries of molybdenum per millicurie of technetium), the time and date of the measurement, and the name of the individual who made the measurement.

[Statutory Authority: RCW 70.98.050. 06-05-019, § 246-240-587, filed 2/6/06, effective 3/9/06.]

WAC 246-240-590 Records of safety instruction. A licensee shall maintain a record of safety instructions required by WAC 246-240-204, 246-240-263, and 246-240-360 for three years. The record must include a list of the topics covered, the date of the instruction, the name(s) of the attendee(s), and the name(s) of the individual(s) who provided the instruction.

[Statutory Authority: RCW 70.98.050. 06-05-019, § 246-240-590, filed 2/6/06, effective 3/9/06.]

WAC 246-240-593 Records of surveys after source implant and removal. A licensee shall maintain a record of the surveys required by WAC 246-240-354 and 246-240-593 for three years. Each record must include the date and results of the survey, the survey instrument used, and the name of the individual who made the survey.

[Statutory Authority: RCW 70.98.050. 06-05-019, § 246-240-593, filed 2/6/06, effective 3/9/06.]

WAC 246-240-596 Records of brachytherapy source accountability. (1) A licensee shall maintain a record of brachytherapy source accountability required by WAC 246-240-260 for three years.

(2) For temporary implants, the record must include:

(a) The number and activity of sources removed from storage, the time and date they were removed from storage, the name of the individual who removed them from storage, and the location of use; and

(b) The number and activity of sources returned to storage, the time and date they were returned to storage, and the name of the individual who returned them to storage.

(3) For permanent implants, the record must include:

(a) The number and activity of sources removed from storage, the date they were removed from storage, and the name of the individual who removed them from storage;

(b) The number and activity of sources not implanted, the date they were returned to storage, and the name of the individual who returned them to storage; and

(c) The number and activity of sources permanently implanted in the patient or human research subject.

[Statutory Authority: RCW 70.98.050. 06-05-019, § 246-240-596, filed 2/6/06, effective 3/9/06.]

WAC 246-240-599 Records of calibration measurements of brachytherapy sources. (1) A licensee shall maintain a record of the calibrations of brachytherapy sources required by WAC 246-240-269 for three years after the last use of the source.

(2) The record must include:

(a) The date of the calibration;

(b) The manufacturer's name, model number, and serial number for the source and the instruments used to calibrate the source;

(c) The source output or activity;

(d) The source positioning accuracy within the applicators; and

(e) The name of the individual, the source manufacturer, or the calibration laboratory that performed the calibration.

[Statutory Authority: RCW 70.98.050. 06-05-019, § 246-240-599, filed 2/6/06, effective 3/9/06.]

WAC 246-240-602 Records of decay of strontium-90 sources for ophthalmic treatments. (1) A licensee shall maintain a record of the activity of a strontium-90 source required by WAC 246-240-272 for the life of the source.

(2) The record must include:

(a) The date and initial activity of the source as determined under WAC 246-240-269; and

(b) For each decay calculation, the date and the source activity as determined under WAC 246-240-272.

[Statutory Authority: RCW 70.98.050. 06-05-019, § 246-240-602, filed 2/6/06, effective 3/9/06.]

WAC 246-240-605 Records of installation, maintenance, adjustment, and repair of remote afterloader units, teletherapy units, and gamma stereotactic radiosurgery units. A licensee shall retain a record of the installation, maintenance, adjustment, and repair of remote afterloader units, teletherapy units, and gamma stereotactic radiosurgery units as required by WAC 246-240-357 for three years. For each installation, maintenance, adjustment and repair, the record must include the date, description of the service, and name(s) of the individual(s) who performed the work.

[Statutory Authority: RCW 70.98.050. 06-05-019, § 246-240-605, filed 2/6/06, effective 3/9/06.]

WAC 246-240-608 Records of safety procedures. A licensee shall retain a copy of the procedures required by WAC 246-240-360 (1)(d) and (4)(b) until the licensee no longer possesses the remote afterloader, teletherapy unit, or gamma stereotactic radiosurgery unit.

[Statutory Authority: RCW 70.98.050. 06-05-019, § 246-240-608, filed 2/6/06, effective 3/9/06.]

WAC 246-240-611 Records of dosimetry equipment used with remote afterloader units, teletherapy units, and gamma stereotactic radiosurgery units. (1) A licensee shall retain a record of the calibration, intercomparison, and comparisons of its dosimetry equipment done in accordance with WAC 246-240-366 for the duration of the license.

(2) For each calibration, intercomparison, or comparison, the record must include:

(a) The date;

(b) The manufacturer's name, model numbers and serial numbers of the instruments that were calibrated, intercompared, or compared as required by WAC 246-240-366;

(c) The correction factor that was determined from the calibration or comparison or the apparent correction factor that was determined from an intercomparison; and

(d) The names of the individuals who performed the calibration, intercomparison, or comparison.

[Statutory Authority: RCW 70.98.050. 06-05-019, § 246-240-611, filed 2/6/06, effective 3/9/06.]

WAC 246-240-614 Records of teletherapy, remote afterloader, and gamma stereotactic radiosurgery full calibrations. (1) A licensee shall maintain a record of the teletherapy unit, remote afterloader unit, and gamma stereotactic radiosurgery unit full calibrations required by WAC 246-240-369, 246-240-372, and 246-240-375 for three years.

(2) The record must include:

(a) The date of the calibration;

(b) The manufacturer's name, model number, and serial number of the teletherapy, remote afterloader, and gamma stereotactic radiosurgery unit(s), the source(s), and the instruments used to calibrate the unit(s);

(c) The results and an assessment of the full calibrations;

(d) The results of the autoradiograph required for low dose-rate remote afterloader units; and

(e) The signature of the authorized medical physicist who performed the full calibration.

[Statutory Authority: RCW 70.98.050. 06-05-019, § 246-240-614, filed 2/6/06, effective 3/9/06.]

WAC 246-240-617 Records of periodic spot-checks for teletherapy units. (1) A licensee shall retain a record of each periodic spot-check for teletherapy units required by WAC 246-240-378 for three years.

(2) The record must include:

(a) The date of the spot-check;

(b) The manufacturer's name, model number, and serial number of the teletherapy unit, source and instrument used to measure the output of the teletherapy unit;

(c) An assessment of timer linearity and constancy;

(d) The calculated on-off error;

(e) A determination of the coincidence of the radiation field and the field indicated by the light beam localizing device;

(f) The determined accuracy of each distance measuring and localization device;

(g) The difference between the anticipated output and the measured output;

(h) Notations indicating the operability of each entrance door electrical interlock, each electrical or mechanical stop, each source exposure indicator light, and the viewing and intercom system and doors; and

(i) The name of the individual who performed the periodic spot-check and the signature of the authorized medical physicist who reviewed the record of the spot-check.

(3) A licensee shall retain a copy of the procedures required by WAC 246-240-378(2) until the licensee no longer possesses the teletherapy unit.

[Statutory Authority: RCW 70.98.050. 06-05-019, § 246-240-617, filed 2/6/06, effective 3/9/06.]

WAC 246-240-620 Records of periodic spot-checks for remote afterloader units. (1) A licensee shall retain a record of each spot-check for remote afterloader units required by WAC 246-240-381 for three years.

(2) The record must include, as applicable:

(a) The date of the spot-check;

(b) The manufacturer's name, model number, and serial number for the remote afterloader unit and source;

(c) An assessment of timer accuracy;

(d) Notations indicating the operability of each entrance door electrical interlock, radiation monitors, source exposure indicator lights, viewing and intercom systems, and clock and decayed source activity in the unit's computer; and

(e) The name of the individual who performed the periodic spot-check and the signature of the authorized medical physicist who reviewed the record of the spot-check.

(3) A licensee shall retain a copy of the procedures required by WAC 246-240-381(2) until the licensee no longer possesses the remote afterloader unit.

[Statutory Authority: RCW 70.98.050. 06-05-019, § 246-240-620, filed 2/6/06, effective 3/9/06.]

WAC 246-240-623 Records of periodic spot-checks for gamma stereotactic radiosurgery units. (1) A licensee shall retain a record of each spot-check for gamma stereotactic radiosurgery units required by WAC 246-240-384 for three years.

(2) The record must include:

(a) The date of the spot-check;

(b) The manufacturer's name, model number, and serial number for the gamma stereotactic radiosurgery unit and the instrument used to measure the output of the unit;

(c) An assessment of timer linearity and accuracy;

(d) The calculated on-off error;

(e) A determination of trunnion centricity;

(f) The difference between the anticipated output and the measured output;

(g) An assessment of source output against computer calculations;

(h) Notations indicating the operability of radiation monitors, helmet microswitches, emergency timing circuits, emergency off buttons, electrical interlocks, source exposure indicator lights, viewing and intercom systems, timer termination, treatment table retraction mechanism, and stereotactic frames and localizing devices (trunnions); and

(i) The name of the individual who performed the periodic spot-check and the signature of the authorized medical physicist who reviewed the record of the spot-check.

(3) A licensee shall retain a copy of the procedures required by WAC 246-240-384(2) until the licensee no longer possesses the gamma stereotactic radiosurgery unit.

[Statutory Authority: RCW 70.98.050. 06-05-019, § 246-240-623, filed 2/6/06, effective 3/9/06.]

WAC 246-240-626 Records of additional technical requirements for mobile remote afterloader units. (1) A licensee shall retain a record of each check for mobile remote afterloader units required by WAC 246-240-387 for three years.

(2) The record must include:

(a) The date of the check;

(b) The manufacturer's name, model number, and serial number of the remote afterloader unit;

(c) Notations accounting for all sources before the licensee departs from a facility;

(d) Notations indicating the operability of each entrance door electrical interlock, radiation monitors, source exposure indicator lights, viewing and intercom system, applicators, source transfer tubes, and transfer tube applicator interfaces, and source positioning accuracy; and

(e) The signature of the individual who performed the check.

[Statutory Authority: RCW 70.98.050. 06-05-019, § 246-240-626, filed 2/6/06, effective 3/9/06.]

WAC 246-240-629 Records of surveys of therapeutic treatment units. (1) A licensee shall maintain a record of radiation surveys of treatment units made in accordance with WAC 246-240-390 for the duration of use of the unit.

(2) The record must include:

(a) The date of the measurements;

(b) The manufacturer's name, model number and serial number of the treatment unit, source, and instrument used to measure radiation levels;

(c) Each dose rate measured around the source while the unit is in the off position and the average of all measurements; and

(d) The signature of the individual who performed the test.

[Statutory Authority: RCW 70.98.050. 06-05-019, § 246-240-629, filed 2/6/06, effective 3/9/06.]

WAC 246-240-632 Records of five-year inspection for teletherapy and gamma stereotactic radiosurgery units. (1) A licensee shall maintain a record of the five-year inspections for teletherapy and gamma stereotactic radiosurgery units required by WAC 246-240-393 for the duration of use of the unit.

(2) The record must contain:

(a) The inspector's radioactive materials license number;

(b) The date of inspection;

(c) The manufacturer's name and model number and serial number of both the treatment unit and source;

(d) A list of components inspected and serviced, and the type of service; and

(e) The signature of the inspector.

[Statutory Authority: RCW 70.98.050. 06-05-019, § 246-240-632, filed 2/6/06, effective 3/9/06.]

WAC 246-240-651 Report and notification of a medical event. (1) A licensee shall report any event, except for an event that results from patient intervention, in which the administration of radioactive material or radiation from radioactive material results in:

(a) A dose that differs from the prescribed dose or dose that would have resulted from the prescribed dosage by more than 0.05 Sv (5 rem) effective dose equivalent, 0.5 Sv (50 rem) to an organ or tissue, or 0.5 Sv (50 rem) shallow dose equivalent to the skin; and

(i) The total dose delivered differs from the prescribed dose by twenty percent or more;

(ii) The total dosage delivered differs from the prescribed dosage by twenty percent or more or falls outside the prescribed dosage range; or

(iii) The fractionated dose delivered differs from the prescribed dose, for a single fraction, by fifty percent or more.

(b) A dose that exceeds 0.05 Sv (5 rem) effective dose equivalent, 0.5 Sv (50 rem) to an organ or tissue, or 0.5 Sv (50 rem) shallow dose equivalent to the skin from any of the following:

(i) An administration of a wrong radioactive drug containing radioactive material;

(ii) An administration of a radioactive drug containing radioactive material by the wrong route of administration;

(iii) An administration of a dose or dosage to the wrong individual or human research subject;

(iv) An administration of a dose or dosage delivered by the wrong mode of treatment; or

(v) A leaking sealed source.

(c) A dose to the skin or an organ or tissue other than the treatment site that exceeds by 0.5 Sv (50 rem) to an organ or tissue and fifty percent or more of the dose expected from the administration defined in the written directive (excluding, for permanent implants, seeds that were implanted in the correct site but migrated outside the treatment site).

(2) A licensee shall report any event resulting from intervention of a patient or human research subject in which the administration of radioactive material or radiation from radioactive material results or will result in unintended permanent functional damage to an organ or a physiological system, as determined by a physician.

(3) The licensee shall notify by telephone (360-236-3300) the department no later than the next calendar day after discovery of the medical event.

(4) By an appropriate method listed in WAC 246-221-250, the licensee shall submit a written report to the department at P.O. Box 47827, Olympia WA 98504-7827 within fifteen days after discovery of the medical event.

(a) The written report must include:

(i) The licensee's name;

(ii) The name of the prescribing physician;

(iii) A brief description of the event;

(iv) Why the event occurred;

(v) The effect, if any, on the individual(s) who received the administration;

(vi) What actions, if any, have been taken or are planned to prevent recurrence; and

(vii) Certification that the licensee notified the individual (or the individual's responsible relative or guardian), and if not, why not.

(b) The report may not contain the individual's name or any other information that could lead to identification of the individual.

(5) The licensee shall provide notification of the event to the referring physician and also notify the individual who is the subject of the medical event no later than twenty-four hours after its discovery, unless the referring physician personally informs the licensee either that they will inform the individual or that, based on medical judgment, telling the individual would be harmful. The licensee is not required to notify the individual without first consulting the referring physician. If the referring physician or the affected individual cannot be reached within twenty-four hours, the licensee shall notify the individual as soon as possible thereafter. The licensee may not delay any appropriate medical care for the individual, including any necessary remedial care as a result of the medical event, because of any delay in notification. To meet the requirements of this section, the notification of the individual who is the subject of the medical event may be made instead to that individual's responsible relative or guardian. If a verbal notification is made, the licensee shall inform the individual, or appropriate responsible relative or guardian, that a written description of the event can be obtained from the licensee upon request. The licensee shall provide a written description if requested.

(6) Aside from the notification requirement, nothing in this section affects any rights or duties of licensees and physicians in relation to each other, to individuals affected by the medical event, or to that individual's responsible relatives or guardians.

(7) A licensee shall:

(a) Annotate a copy of the report provided to the department with the:

(i) Name of the individual who is the subject of the event; and

(ii) Social Security number or other identification number, if one has been assigned, of the individual who is the subject of the event; and

(b) Provide a copy of the annotated report to the referring physician, if other than the licensee, no later than fifteen days after the discovery of the event.

[Statutory Authority: RCW 70.98.050. 06-05-019, § 246-240-651, filed 2/6/06, effective 3/9/06.]

WAC 246-240-654 Report and notification of a dose to an embryo/fetus or a nursing child. (1) A licensee shall report to the department at P.O. Box 47827, Olympia WA 98504-7827, (phone 360-236-3300), any dose to an embryo/fetus that is greater than 50 mSv (5 rem) dose equivalent that is a result of an administration of radioactive material or radiation from radioactive material to a pregnant individual unless the dose to the embryo/fetus was specifically approved, in advance, by the authorized user.

(2) A licensee shall report any dose to a nursing child that is a result of an administration of radioactive material to a breast-feeding individual that:

(a) Is greater than 50 mSv (5 rem) total effective dose equivalent; or

(b) Has resulted in unintended permanent functional damage to an organ or a physiological system of the child, as determined by a physician.

(3) The licensee shall notify by telephone the department no later than the next calendar day after discovery of a dose to the embryo/fetus or nursing child that requires a report in subsection (1) or (2) of this section.

(4) By an appropriate method listed in WAC 246-221-250, the licensee shall submit a written report to the department within fifteen days after discovery of a dose to the embryo/fetus or nursing child that requires a report in subsection (1) or (2) of this section.

(a) The written report must include:

(i) The licensee's name;

(ii) The name of the prescribing physician;

(iii) A brief description of the event;

(iv) Why the event occurred;

(v) The effect, if any, on the embryo/fetus or the nursing child;

(vi) What actions, if any, have been taken or are planned to prevent recurrence; and

(vii) Certification that the licensee notified the pregnant individual or mother (or the mother's or child's responsible relative or guardian), and if not, why not.

(b) The report must not contain the individual's or child's name or any other information that could lead to identification of the individual or child.

(5) The licensee shall provide notification of the event to the referring physician and also notify the pregnant individual or mother, both hereafter referred to as the mother, no later than twenty-four hours after discovery of an event that would require reporting under subsection (1) or (2) of this section, unless the referring physician personally informs the licensee either that they will inform the mother or that, based on medical judgment, telling the mother would be harmful. The licensee is not required to notify the mother without first consulting with the referring physician. If the referring physician or mother cannot be reached within twenty-four hours, the licensee shall make the appropriate notifications as soon as possible thereafter. The licensee may not delay any appropriate medical care for the embryo/fetus or for the nursing child, including any necessary remedial care as a result of the event, because of any delay in notification. To meet the requirements of this subsection, the notification may be made to the mother's or child's responsible relative or guardian instead of the mother. If a verbal notification is made, the licensee shall inform the mother, or the mother's or child's responsible relative or guardian, that a written description of the event can be obtained from the licensee upon request. The licensee shall provide a written description if requested.

(6) A licensee shall:

(a) Annotate a copy of the report provided to the department with the:

(i) Name of the pregnant individual or the nursing child who is the subject of the event; and

(ii) Social Security number or other identification number, if one has been assigned, of the pregnant individual or the nursing child who is the subject of the event; and

(b) Provide a copy of the annotated report to the referring physician, if other than the licensee, no later than fifteen days after the discovery of the event.

[Statutory Authority: RCW 70.98.050. 06-05-019, § 246-240-654, filed 2/6/06, effective 3/9/06.]

WAC 246-240-657 Report of a leaking source. A licensee shall file a report within five days if a leak test required by WAC 246-240-113 reveals the presence of 185 Bq (0.005 μCi) or more of removable contamination. The report must be filed with the department, and sent to the department at P.O. Box 47827, Olympia WA 98504-7827, (phone 360-236-3300). The written report must include the model number and serial number if assigned, of the leaking source; the radionuclide and its estimated activity; the results of the test; the date of the test; and the action taken.

[Statutory Authority: RCW 70.98.050. 06-05-019, § 246-240-657, filed 2/6/06, effective 3/9/06.]

Chapter 246-243 WAC

RADIATION PROTECTION—INDUSTRIAL RADIOGRAPHY

WAC

246-243-001	Purpose.
246-243-010	Scope.
246-243-020	Definitions.
246-243-030	Conducting industrial radiography operations.
246-243-040	Equipment performance requirements.
246-243-042	Labeling, storage, and transportation.
246-243-044	Records of receipt and transfer of sealed sources.
246-243-047	Radiation safety officer for industrial radiography.
246-243-050	Internal inspection program and training.
246-243-060	Locking of radiographic exposure devices.
246-243-070	Storage precautions.
246-243-080	Radiation survey instruments.
246-243-090	Leak testing, repair, tagging, opening, modification, and replacement of sealed sources.
246-243-100	Quarterly inventory.
246-243-110	Utilization logs.
246-243-120	Inspection and maintenance of radiographic exposure devices, transport and storage containers, associated equipment, source changers, and survey instruments.
246-243-130	Limitations—Personal radiation safety requirements for radiographers and radiographers' assistants.
246-243-140	Operating and emergency procedures.
246-243-141	Copies of operating and emergency procedures.
246-243-150	Personnel monitoring control.
246-243-160	Supervision of radiographers' assistants.
246-243-170	Security—Precautionary procedures in radiographic operations.
246-243-180	Posting.
246-243-190	Radiation surveys and survey records.
246-243-195	Reporting.
246-243-200	Records required at temporary job sites.
246-243-203	Form of records.
246-243-205	Temporary job site notification.
246-243-220	Special requirements for permanent radiographic installation.
246-243-230	Appendix A—Minimum subjects to be covered in training radiographers.
246-243-240	Appendix B—General guidelines for inspection of radiography equipment.
246-243-250	Appendix C—Radiographer certification.

DISPOSITION OF SECTIONS FORMERLY CODIFIED IN THIS CHAPTER

246-243-210 Special requirements for enclosed radiography. [Statutory Authority: RCW 70.98.050. 94-01-073, § 246-243-210, filed 12/9/93, effective 1/9/94. Statutory Authority: RCW 70.98.050 and 70.98.080. 91-15-112 (Order 184), § 246-243-210, filed 7/24/91, effective 8/24/91. Statutory Authority: RCW 43.70.040. 91-02-049 (Order 121), recodified as § 246-243-210, filed 12/27/90, effective 1/31/91. Statutory Authority: RCW 70.98.080. 83-19-050 (Order 2026), § 402-36-155, filed 9/16/83. Statutory Authority: RCW 70.98.050. 81-01-011 (Order 1570), § 402-36-155, filed 12/8/80; Order 1084, § 402-36-155, filed 1/14/76.] Repealed by 00-08-013, filed 3/24/00, effective 4/24/00. Statutory Authority: RCW 70.98.050.

WAC 246-243-001 Purpose. The regulations in this chapter establish radiation safety requirements for persons utilizing sources of radiation for industrial radiography. The requirements of this part are in addition to and not in substitution for the other requirements of these regulations.

[Statutory Authority: RCW 43.70.040. 91-02-049 (Order 121), recodified as § 246-243-001, filed 12/27/90, effective 1/31/91; Order 1084, § 402-36-010, filed 1/14/76; Order 1, § 402-36-010, filed 1/8/69; Rules (part), filed 10/26/66.]

WAC 246-243-010 Scope. The regulations in this chapter apply to all licensees who use sources of radiation for industrial radiography: Provided, however, That nothing in this part shall apply to the use of sources of radiation in the healing arts.

[Statutory Authority: RCW 70.98.050. 94-01-073, § 246-243-010, filed 12/9/93, effective 1/9/94. Statutory Authority: RCW 43.70.040. 91-02-049 (Order 121), recodified as § 246-243-010, filed 12/27/90, effective 1/31/91; Order 1084, § 402-36-020, filed 1/14/76; Order 1, § 402-36-020, filed 1/8/69; Rules (part), filed 10/26/66.]

WAC 246-243-020 Definitions. As used in this part:

(1) "Annual refresher safety training" means a review conducted or provided by the licensee for its employees on radiation safety aspects of industrial radiography. The review may include, as appropriate, the results of internal inspections, new procedures or equipment, new or revised regulations, accidents or errors that have been observed, and should also provide opportunities for employees to ask safety questions.

(2) "Associated equipment" means equipment that is used in conjunction with a radiographic exposure device to make radiographic exposures that drives, guides, or comes in contact with the source, (e.g., guide tube, control tube, control (drive) cable, removable source stop, "J" tube and collimator) when it is used as an exposure head.

(3) "Certifying entity" means an independent certifying organization meeting the requirements in WAC 246-243-250 Appendix C or an agreement state meeting the requirements in WAC 246-243-250 Appendix C, subsections (2) and (3).

(4) "Collimator" means a radiation shield that is placed on the end of the guide tube or directly onto a radiographic exposure device to restrict the size of the radiation beam when the sealed source is cranked into position to make a radiographic exposure.

(5) "Control (drive) cable" means the cable that is connected to the source assembly and used to drive the source to and from the exposure location.

(6) "Control drive mechanism" means a device that enables the source assembly to be moved to and from the exposure device.

(7) "Control tube" means a protective sheath for guiding the control cable. The control tube connects the control drive mechanism to the radiographic exposure device.

(8) "Exposure head" means a device that locates the gamma radiography sealed source in the selected working position. (An exposure head is also known as a source stop.)

(9) "Field station" means a facility where licensed material may be stored or used and from which equipment is dispatched.

(10) "Guide tube (projection sheath)" means a flexible or rigid tube (i.e., "J" tube) for guiding the source assembly and the attached control cable from the exposure device to the exposure head. The guide tube may also include the connections necessary for attachment to the exposure device and to the exposure head.

(11) "Hands-on experience" means experience in all of those areas considered to be directly involved in the radiography process.

(12) "Independent certifying organization" means an independent organization that meets all of the criteria of WAC 246-243-250 Appendix C.

(13) "Industrial radiography" (radiography) means the examination of the macroscopic structure of materials by nondestructive methods utilizing sources of radiation to make radiographic images. Industrial radiography as used in this chapter does not include well logging operations.

(14) "Lay-barge radiography" means industrial radiography performed on any water vessel used for laying pipe.

(15) "Offshore platform radiography" means industrial radiography conducted from a platform over a body of water.

(16) "Permanent radiographic installation" means an enclosed shielded room, cell or vault, not located at a temporary job site, in which radiography is performed, regardless of ownership.

(17) "Practical examination" means a demonstration through practical application of the safety rules and principles in industrial radiography including use of all appropriate equipment and procedures.

(18) "Radiation safety officer for industrial radiography" means an individual with the responsibility for the overall radiation safety program on behalf of the licensee and who meets the requirements of WAC 246-243-047.

(19) "Radiographer" means any individual who performs or who, in attendance at the site where sources of radiation are being used, personally supervises industrial radiographic operations and who is responsible to the licensee for assuring compliance with the requirements of these regulations and all license conditions.

(20) "Radiographer certification" means written approval received from a certifying entity stating that an individual has satisfactorily met certain established radiation safety, testing, and experience criteria.

(21) "Radiographer's assistant" means any individual who, under the personal supervision of a radiographer, uses sources of radiation, related handling tools, or radiation survey instruments in industrial radiography.

(22) "Radiographic exposure device" means any instrument containing a sealed source fastened or contained therein, in which the sealed source or shielding thereof may be moved, or otherwise changed, from a shielded to unshielded position for purposes of making a radiographic exposure.

(23) "Radiographic operations" means all activities associated with the presence of radioactive sources in a radiographic exposure device during use of the device or transport (except when being transported by a common or contract carrier), to include surveys to confirm the adequacy of boundaries, setting up equipment and any activity inside restricted area boundaries.

(24) "S-tube" means a tube through which the radioactive source travels when inside a radiographic exposure device.

(25) "Shielded position" means the location within the radiographic exposure device or source changer where the sealed source is secured and restricted from movement.

(26) "Source assembly" means an assembly that consists of the sealed source and a connector that attaches the source to the control cable. The source assembly may also include a stop ball used to secure the source in the shielded position.

(27) "Source changer" means a device designed and used for replacement of sealed sources in radiographic exposure devices, including those also used for transporting and storage of sealed sources.

(28) "Storage area" means any location, facility, or vehicle which is used to store or to secure a radiographic exposure device, a storage container, or a sealed source when it is not in use and which is locked or has a physical barrier to prevent accidental exposure, tampering with, or unauthorized removal of the device, container, or source.

(29) "Storage container" means a container in which sealed sources are secured and stored.

(30) "Temporary job site" means a location where radiographic operations are conducted and where licensed material may be stored other than those location(s) of use authorized on the license.

(31) "Underwater radiography" means industrial radiography performed when the radiographic exposure device and/or related equipment are beneath the surface of the water.

[Statutory Authority: RCW 70.98.050. 00-08-013, § 246-243-020, filed 3/24/00, effective 4/24/00; 94-01-073, § 246-243-020, filed 12/9/93, effective 1/9/94. Statutory Authority: RCW 70.98.050 and 70.98.080. 91-15-112 (Order 184), § 246-243-020, filed 7/24/91, effective 8/24/91. Statutory Authority: RCW 43.70.040. 91-02-049 (Order 121), recodified as § 246-243-020, filed 12/27/90, effective 1/31/91. Statutory Authority: RCW 70.98.080. 83-19-050 (Order 2026), § 402-36-025, filed 9/16/83. Statutory Authority: RCW 70.98.050. 81-01-011 (Order 1570), § 402-36-025, filed 12/8/80; Order 1084, § 402-36-025, filed 1/14/76.]

WAC 246-243-030 Conducting industrial radiography operations. (1) Whenever radiography is performed at a location other than a permanent radiographic installation, the radiographer must be accompanied by at least one other qualified radiographer or an individual who has at a minimum met the requirements of WAC 246-243-130(2) (radiographer's assistant). The additional qualified individual shall observe the operations and be capable of providing immediate assistance to prevent unauthorized entry. Radiography may not be performed if only one qualified individual is present.

(2) All radiographic operations conducted at locations of use authorized on the license must be conducted in a permanent radiographic installation, unless specifically authorized by the department.

(3) Offshore platform, lay-barge, and/or underwater radiography shall be performed only by licensees whose license specifically authorizes such activity. Such operations fall under the jurisdiction of the United States Nuclear Regulatory Commission when conducted outside of the territorial waters of the state of Washington.

(4) Licensees will have until January 1, 2001, to meet the requirement for having two qualified individuals present at locations other than a permanent radiographic installation as specified in subsection (1) of this section.

[Statutory Authority: RCW 70.98.050. 00-08-013, § 246-243-030, filed 3/24/00, effective 4/24/00. Statutory Authority: RCW 43.70.040. 91-02-049 (Order 121), recodified as § 246-243-030, filed 12/27/90, effective 1/31/91. Statutory Authority: RCW 70.98.080. 83-19-050 (Order 2026), § 402-36-027, filed 9/16/83.]

WAC 246-243-040 Equipment performance requirements. Equipment used in industrial radiography operations must meet the following minimum criteria:

(1)(a) Each radiographic exposure device, source assembly or sealed source, and all associated equipment must meet the requirements specified in American National Standards Institute, N432-1980 "*Radiological Safety for the Design and Construction of Apparatus for Gamma Radiography*," (published as NBS Handbook 136, issued January 1981). Copies of the document are available for inspection at the Department of Health, Division of Radiation Protection, Olympia, Washington.

(b) Engineering analysis may be submitted by an applicant or licensee to demonstrate the applicability of previously performed testing on similar individual radiography equipment components. Upon review, the department may find this an acceptable alternative to actual testing of the component pursuant to the above referenced standard.

(c) Notwithstanding (a) of this subsection, equipment used in industrial radiographic operations need not comply with § 8.9.2(c) of the Endurance Test in American National Standards Institute N432-1980, if the prototype equipment has been tested using a torque value representative of the torque that an individual using the radiography equipment can realistically exert on the lever or crankshaft of the drive mechanism.

(2) In addition to the requirements specified in subsection (1) of this section, the following requirements apply to radiographic exposure devices, source changers, source assemblies and sealed sources.

(a) The licensee shall ensure that each radiographic exposure device has attached to it a durable, legible, clearly visible label bearing the:

(i) Chemical symbol and mass number of the radionuclide in the device;

(ii) Activity and the date on which this activity was last measured;

(iii) Model (or product code) and serial number of the sealed source;

(iv) Manufacturer's identity of the sealed source; and

(v) Licensee's name, address, and telephone number.

(b) Radiographic exposure devices intended for use as Type B transport containers must meet the applicable requirements of 10 CFR Part 71.

(c) Modification of radiographic exposure devices, source changers, and source assemblies and associated equipment is prohibited, unless the design of any replacement component, including source holder, source assembly, controls or guide tubes would not compromise the design safety features of the system.

(3) In addition to the requirements specified in subsections (1) and (2) of this section, the following requirements apply to radiographic exposure devices, source assemblies, and associated equipment that allow the source to be moved out of the device for radiographic operations or to source changers.

(a) The coupling between the source assembly and the control cable must be designed in such a manner that the source assembly will not become disconnected if cranked outside the guide tube. The coupling must be such that it can not be unintentionally disconnected under normal and reasonably foreseeable abnormal conditions.

(b) The device must automatically secure the source assembly when it is cranked back into the fully shielded position within the device. The securing system may only be released by means of a deliberate operation on the exposure device.

(c) The outlet fittings, lock box, and drive cable fitting on each radiographic exposure device must be equipped with safety plugs or covers which must be installed during storage and transportation to protect the source assembly from water, mud, sand, or other foreign matter.

(d)(i) Each sealed source or source assembly must have attached to it or engraved on it, a durable, legible, visible label with the words: "DANGER—RADIOACTIVE."

(ii) The label may not interfere with the safe operation of the exposure device or associated equipment.

(e) The guide tube must be able to withstand a crushing test that closely approximates the crushing forces that are likely to be encountered during use, and be able to withstand a kinking resistance test that closely approximates the kinking forces likely to be encountered during use.

(f) Guide tubes must be used when moving the source out of the device.

(g) An exposure head or similar device designed to prevent the source assembly from passing out of the end of the guide tube must be attached to the outermost end of the guide tube during radiographic operations.

(h) The guide tube exposure head connection must be able to withstand the tensile test for control units specified in ANSI N432-1980.

(i) Source changers must provide a system for ensuring that the source will not be accidentally withdrawn from the changer when connecting or disconnecting the drive cable to or from a source assembly.

(4) All radiographic exposure devices and associated equipment in use after January 1, 1998, must comply with the requirements of this section.

(5) The maximum exposure rate limits for storage containers and source changers with the sealed source in the shielded position are:

(a) 2 millisieverts (200 millirem) per hour at any exterior surface; and

(b) 0.1 millisieverts (10 millirem) per hour at one meter from any exterior surface.

[Statutory Authority: RCW 70.98.050. 99-05-012, § 246-243-040, filed 2/5/99, effective 3/8/99; 94-01-073, § 246-243-040, filed 12/9/93, effective 1/9/94. Statutory Authority: RCW 43.70.040. 91-02-049 (Order 121), recodified as § 246-243-040, filed 12/27/90, effective 1/31/91. Statutory Authority: RCW 70.98.050. 81-01-011 (Order 1570), § 402-36-030, filed 12/8/80; Order 1084, § 402-36-030, filed 1/14/76; Order 1, § 402-36-030, filed 1/8/69; Rules (part), filed 10/26/66.]

WAC 246-243-042 Labeling, storage, and transportation. (1) The licensee may not use a source changer or a container to store licensed material unless the source changer or the storage container has securely attached to it a durable, legible, and clearly visible label bearing the standard trefoil radiation caution symbol in conventional colors, i.e., magenta, purple or black on a yellow background, having a minimum diameter of 25 mm, and the wording:

CAUTION (or "DANGER")
RADIOACTIVE MATERIAL
NOTIFY CIVIL AUTHORITIES
(or "NAME OF COMPANY")

(2) The licensee may not transport licensed material unless the material is packaged, and the package is labeled, marked, and accompanied with appropriate shipping papers in accordance with regulations set out in 10 CFR Part 71.

(3) Locked radiographic exposure devices and storage containers must be physically secured to prevent tampering or removal by unauthorized personnel. The licensee shall store licensed material in a manner which will minimize danger from explosion or fire.

(4) The licensee shall lock and physically secure the transport package containing licensed material in the transporting vehicle to prevent accidental loss, tampering, or unauthorized removal of the licensed material from the vehicle.

[Statutory Authority: RCW 70.98.050. 00-08-013, § 246-243-042, filed 3/24/00, effective 4/24/00.]

WAC 246-243-044 Records of receipt and transfer of sealed sources. (1) Each licensee shall maintain records showing the receipts and transfers of sealed sources and of devices using depleted uranium (DU) for shielding and retain each record for three years after it is made.

(2) These records must include the date, shipper or destination, the name of the individual making the record, radionuclide, number of becquerels (curies) or mass (for DU), and manufacturer, model, and serial number of each sealed source and/or device, as appropriate.

[Statutory Authority: RCW 70.98.050. 00-08-013, § 246-243-044, filed 3/24/00, effective 4/24/00.]

WAC 246-243-047 Radiation safety officer for industrial radiography. The radiation safety officer (RSO) shall ensure that radiation safety activities are being performed in accordance with approved procedures and regulatory requirements in the daily operation of the licensee's program.

(1) The minimum qualifications, training, and experience for RSOs for industrial radiography are as follows:

(a) Completion of the training and testing requirements of WAC 246-243-130(1);

(b) Two thousand hours of hands-on experience as a qualified radiographer in industrial radiographic operations utilizing sealed radioactive material; and

(c) Formal training in the establishment and maintenance of a radiation protection program.

(2) The department will consider alternatives when the RSO has appropriate training and/or experience in the field of ionizing radiation, and in addition, has adequate formal training with respect to the establishment and maintenance of a radiation safety protection program.

(3) The specific duties and authorities of the RSO include, but are not limited to:

(a) Establishing and overseeing all operating, emergency, and ALARA procedures as required by chapter 246-221 WAC, and reviewing them regularly to ensure that the procedures in use conform to current chapter 246-221 WAC requirements, conform to other department regulations and to the license conditions;

(b) Overseeing and approving all phases of the training program for radiographic personnel, ensuring that appropriate and effective radiation protection practices are taught;

(c) Ensuring that required radiation surveys and leak tests are performed and documented in accordance with the regulations, including any corrective measures when levels of radiation exceed established limits;

(d) Ensuring that personnel monitoring devices are calibrated and used properly by occupationally exposed personnel, that records are kept of the monitoring results, and that timely notifications are made as required by WAC 246-221-260; and

(e) Ensuring that operations are conducted safely and to assume control for instituting corrective actions including stopping of operations when necessary.

(4) The licensee will have until January 1, 2001, to meet the requirements of subsection (1) or (2) of this section.

[Statutory Authority: RCW 70.98.050. 00-08-013, § 246-243-047, filed 3/24/00, effective 4/24/00.]

WAC 246-243-050 Internal inspection program and training. (1) Each licensee shall conduct the internal inspection of job performance required by WAC 246-235-084 at intervals not to exceed six months. Except as provided in subsection (1)(d) of this section, the radiation safety officer (RSO) or designee shall conduct an inspection program of the job performance of each radiographer and radiographer's assistant to ensure that the department's regulations, license requirements, and the licensee's operating and emergency procedures are followed. The inspection program shall:

(a) Include observation of the performance of each radiographer and radiographer's assistant during an actual industrial radiographic operation, at intervals not to exceed six months; and

(b) Provide that, if a radiographer or a radiographer's assistant has not participated in an industrial radiographic operation for more than six months since the last inspection, the radiographer must demonstrate knowledge of the training requirements of WAC 246-243-130 (1)(c) and the radiographer's assistant must redemonstrate knowledge of the training requirements of WAC 246-243-130 (2)(b) by a practical examination before these individuals can next participate in a radiographic operation.

(c) The department may consider alternatives in situations where the individual serves as both radiographer and RSO.

(d) In operations where a single individual serves as both radiographer and RSO, and performs all radiography operations, an inspection program is not required.

(2) The licensee shall provide annual refresher safety training for each radiographer and radiographer's assistant at intervals not to exceed twelve months.

(3) Each licensee shall maintain the following records for three years after the record is made:

(a) For semiannual inspection of job performance, the record shall include:

(i) A list of the items checked; and

(ii) Any noncompliances observed by the RSO;

(b) For annual refresher safety training, the record shall include:

(i) A list of the topics discussed;

(ii) The dates the training was conducted; and

(iii) Names of the instructors and attendees.

[Statutory Authority: RCW 70.98.050. 00-08-013, § 246-243-050, filed 3/24/00, effective 4/24/00. Statutory Authority: RCW 70.98.050 and 70.98.-080. 92-06-008 (Order 245), § 246-243-050, filed 2/21/92, effective 3/23/92. Statutory Authority: RCW 43.70.040. 91-02-049 (Order 121), recodified as § 246-243-050, filed 12/27/90, effective 1/31/91. Statutory Authority: RCW 70.98.080. 83-19-050 (Order 2026), § 402-36-035, filed 9/16/83.]

WAC 246-243-060 Locking of radiographic exposure devices. (1) Each radiographic exposure device shall be provided with a lock or outerlocked container designed to prevent unauthorized or accidental production of radiation or removal or exposure of a sealed source and shall be locked when returned to the shielded position at all times. If it is a keyed-lock, the key shall be removed at all times when not under the direct surveillance of a radiographer or a radiographer's assistant except at permanent radiographic installations as stated in WAC 246-243-170. In addition, during radiographic operations the sealed source assembly shall be locked in the shielded position each time the source is returned to that position.

(2) Each sealed source storage container and source changer shall have a lock or outer locked container designed to prevent unauthorized or accidental removal of the sealed source from its shielded position. Storage containers and source changers shall be kept locked (and if a keyed-lock, with the key removed at all times) when containing sealed sources except when under the direct surveillance of a radiographer or a radiographer's assistant.

(3) Radiographic exposure devices, source changers, and storage containers, prior to being moved from one location to another and also prior to being secured at a given location, shall be locked and surveyed to assure that the sealed source is in the shielded position.

[Statutory Authority: RCW 70.98.050. 00-08-013, § 246-243-060, filed 3/24/00, effective 4/24/00. Statutory Authority: RCW 70.98.050 and 70.98.080. 91-15-112 (Order 184), § 246-243-060, filed 7/24/91, effective 8/24/91. Statutory Authority: RCW 43.70.040. 91-02-049 (Order 121), recodified as § 246-243-060, filed 12/27/90, effective 1/31/91. Statutory Authority: RCW 70.98.050. 81-01-011 (Order 1570), § 402-36-040, filed 12/8/80; Order 1084, § 402-36-040, filed 1/14/76; Order 1, § 402-36-040, filed 1/8/69; Rules (part), filed 10/26/66.]

WAC 246-243-070 Storage precautions. (1) Locked radiographic exposure devices and storage containers shall be physically secured to prevent tampering or removal by unauthorized personnel.

(2) At least one calibrated and operable radiation survey instrument shall be available at the storage area whenever a radiographic exposure device, a storage container, or source is being placed in storage.

[Statutory Authority: RCW 70.98.050. 94-01-073, § 246-243-070, filed 12/9/93, effective 1/9/94. Statutory Authority: RCW 43.70.040. 91-02-049 (Order 121), recodified as § 246-243-070, filed 12/27/90, effective 1/31/91. Statutory Authority: RCW 70.98.050. 81-01-011 (Order 1570), § 402-36-

050, filed 12/8/80; Order 1084, § 402-36-050, filed 1/14/76; Order 1, § 402-36-050, filed 1/8/69; Rules (part), filed 10/26/66.]

WAC 246-243-080 Radiation survey instruments. (1) The licensee shall maintain sufficient calibrated and operable radiation survey instruments at each location where radioactive material is present to make physical radiation surveys as required by this part and chapter 246-221 WAC. Instrumentation required by this section shall be capable of measuring a range from 0.02 millisieverts (2 millirems) per hour through 0.01 sievert (1 rem) per hour.

(2) Each radiation survey instrument shall be calibrated:

(a) At intervals not to exceed six months and after each instrument servicing except for battery changes;

(b) Such that accuracy within ± 20 percent of the calibration source can be demonstrated at each point checked; and

(c) For linear scale instruments, at two points located approximately one-third and two-thirds of full scale on each scale; for logarithmic scale instruments, at mid-range of each decade; and for digital instruments at three points between 0.02 and 10 millisieverts (2 and 1000 millirems) per hour.

(3) Records shall be maintained of these calibrations for three years after the calibration date for inspection by the department.

[Statutory Authority: RCW 70.98.050. 00-08-013, § 246-243-080, filed 3/24/00, effective 4/24/00; 94-01-073, § 246-243-080, filed 12/9/93, effective 1/9/94. Statutory Authority: RCW 70.98.050 and 70.98.080. 91-15-112 (Order 184), § 246-243-080, filed 7/24/91, effective 8/24/91. Statutory Authority: RCW 43.70.040. 91-02-049 (Order 121), recodified as § 246-243-080, filed 12/27/90, effective 1/31/91. Statutory Authority: RCW 70.98.080. 83-19-050 (Order 2026), § 402-36-060, filed 9/16/83. Statutory Authority: RCW 70.98.050. 81-01-011 (Order 1570), § 402-36-060, filed 12/8/80; Order 1084, § 402-36-060, filed 1/14/76; Order 1, § 402-36-060, filed 1/8/69; Rules (part), filed 10/26/66.]

WAC 246-243-090 Leak testing, repair, tagging, opening, modification, and replacement of sealed sources. (1) The replacement of any sealed source fastened to or contained in a radiographic exposure device and leak testing, repair, tagging, opening, or any other modification of any sealed source shall be performed only by persons specifically authorized to do so by the department, the United States Nuclear Regulatory Commission, or any agreement state.

(2) Each sealed source shall be tested for leakage at intervals not to exceed six months. Sealed sources that are in storage and not in use do not require leak testing, but must be tested before use or transfer to another person if the interval of storage exceeds six months. In the absence of a certificate from a transferor that a test has been made within the six-month period prior to the transfer, the sealed source shall not be put into use until tested and results obtained.

(3) The leak test shall be capable of detecting the presence of 185 becquerels (0.005 microcurie) of removable contamination on the sealed source. An acceptable leak test for sealed sources in the possession of a radiography licensee would be to test at the nearest accessible point to the sealed source storage position, or other appropriate measuring point where contamination might accumulate, by a procedure specifically approved in a license condition. Records of leak test results shall be kept in units of becquerels (microcuries) and maintained for inspection by the department for three years after the leak test is performed.

(4) Any test conducted under subsections (2) and (3) of this section which reveals the presence of 185 becquerels (0.005 microcurie) or more of removable radioactive material shall be considered evidence that the sealed source is leaking. The licensee shall immediately withdraw the equipment involved from use and shall cause it to be decontaminated and repaired or to be disposed in accordance with regulations of the department. Within five days after obtaining results of the test, the licensee shall file a report with the department describing the involved equipment, the test results, and the corrective action taken.

(5) Each exposure device using depleted uranium (DU) shielding and an "S" tube configuration must be tested for DU contamination at intervals not to exceed twelve months. The analysis must be capable of detecting the presence of 185 becquerels (0.005 microcuries) of radioactive material on the test sample and must be performed by a person specifically authorized by the department, the United States Nuclear Regulatory Commission or an agreement state to perform the analysis. If testing reveals the presence of 185 becquerels (0.005 microcuries) or more of removable DU contamination, the exposure device must be removed from use until an evaluation of the wear on the S-tube has been made. If the evaluation reveals that the S-tube is worn through, the device may not be used again. DU shielded devices do not have to be tested for DU contamination while in storage and not in use. Before using or transferring such a device however, the device must be tested for DU contamination if the interval of storage exceeded twelve months. A record of the DU leak-test results shall be kept in units of becquerels (microcuries) and maintained for inspection by the department for three years after the DU leak test is made or until the source in storage is removed. Licensees will have until January 1, 2001, to comply with the DU leak testing requirements of this section.

[Statutory Authority: RCW 70.98.050. 00-08-013, § 246-243-090, filed 3/24/00, effective 4/24/00; 99-05-012, § 246-243-090, filed 2/5/99, effective 3/8/99; 94-01-073, § 246-243-090, filed 12/9/93, effective 1/9/94. Statutory Authority: RCW 70.98.050 and 70.98.080. 91-15-112 (Order 184), § 246-243-090, filed 7/24/91, effective 8/24/91. Statutory Authority: RCW 43.70.-040. 91-02-049 (Order 121), recodified as § 246-243-090, filed 12/27/90, effective 1/31/91. Statutory Authority: RCW 70.98.080. 87-01-031 (Order 2450), § 402-36-070, filed 12/11/86; 83-19-050 (Order 2026), § 402-36-070, filed 9/16/83. Statutory Authority: RCW 70.98.050. 81-01-011 (Order 1570), § 402-36-070, filed 12/8/80; Order 1084, § 402-36-070, filed 1/14/76; Order 1, § 402-36-070, filed 1/8/69; Rules (part), filed 10/26/66.]

WAC 246-243-100 Quarterly inventory. Each licensee shall conduct a quarterly physical inventory to account for all sealed sources and for devices containing depleted uranium (DU) received or possessed. The records of the inventories shall be maintained for three years from the date of inventory for inspection by the department and shall include:

(1) Exposure device or source changer make, model, and serial number;

(2) Sealed source serial number and manufacturer;

(3) Radionuclide and current activity in becquerels (curies) or mass (for DU) in each device;

(4) Location of sealed source and/or device/changer;

(5) Date of inventory;

(6) Name of person who performed inventory.

[Statutory Authority: RCW 70.98.050. 00-08-013, § 246-243-100, filed 3/24/00, effective 4/24/00; 94-01-073, § 246-243-100, filed 12/9/93, effective 1/9/94. Statutory Authority: RCW 43.70.040. 91-02-049 (Order 121),

recodified as § 246-243-100, filed 12/27/90, effective 1/31/91. Statutory Authority: RCW 70.98.080. 83-19-050 (Order 2026), § 402-36-080, filed 9/16/83. Statutory Authority: RCW 70.98.050. 81-01-011 (Order 1570), § 402-36-080, filed 12/8/80; Order 1084, § 402-36-080, filed 1/14/76; Order 1, § 402-36-080, filed 1/8/69; Rules (part), filed 10/26/66.]

WAC 246-243-110 Utilization logs. (1) Each licensee shall maintain current logs, which shall be kept available for inspection by the department for three years from the date of the recorded event, at the address specified in the license showing for each sealed source and radiation exposure device the following information:

(a) A description (including the make, model and serial number) of each radiation exposure device or transport or storage container in which the sealed source is located:

(b) The identity and signature of the radiographer to whom assigned; and

(c) Locations where used and dates of use including the dates removed and returned to storage.

(2) A separately identified utilization log is not required if the equivalent information is available in records of the licensee and available at the address specified in the license.

[Statutory Authority: RCW 70.98.050. 00-08-013, § 246-243-110, filed 3/24/00, effective 4/24/00; 94-01-073, § 246-243-110, filed 12/9/93, effective 1/9/94. Statutory Authority: RCW 70.98.050 and 70.98.080. 91-15-112 (Order 184), § 246-243-110, filed 7/24/91, effective 8/24/91. Statutory Authority: RCW 43.70.040. 91-02-049 (Order 121), recodified as § 246-243-110, filed 12/27/90, effective 1/31/91. Statutory Authority: RCW 70.98.050. 81-01-011 (Order 1570), § 402-36-090, filed 12/8/80; Order 1084, § 402-36-090, filed 1/14/76; Order 1, § 402-36-090, filed 1/8/69; Rules (part), filed 10/26/66.]

WAC 246-243-120 Inspection and maintenance of radiographic exposure devices, transport and storage containers, associated equipment, source changers, and survey instruments. (1) The licensee shall perform visual and operability checks on survey meters, radiographic exposure devices, transport and storage containers, associated equipment and source changers before use on each day the equipment is to be used to ensure that the equipment is in good working condition, that the sources are adequately shielded, and that required labeling is present. Survey instrument operability must be performed using check sources or other appropriate means. If equipment problems are found, the equipment must be removed from service until repaired.

(2) Each licensee shall have written procedures for:

(a) Inspection and routine maintenance of radiographic exposure devices, source changers, associated equipment, transport and storage containers, and survey instruments at intervals not to exceed three months or before the first use thereafter to ensure the proper functioning of components important to safety. Replacement components shall meet design specifications. If equipment problems are found, the equipment must be removed from service until repaired.

(b) Inspection and maintenance necessary to maintain the Type B packaging used to transport radioactive materials. The inspection and maintenance program must include procedures to assure that Type B packages are shipped and maintained in accordance with the certificate of compliance or other approval.

(3) Any maintenance performed on radiographic exposure devices and accessories shall be in accordance with the manufacturer's specifications.

(4) Records of daily checks and quarterly inspections including any equipment problems identified and of any maintenance performed under subsections (1) and (2) of this section shall be made and retained for three years. The record shall include:

(a) The date of check or inspection;

(b) Name of inspector;

(c) Equipment involved;

(d) Any problems found; and

(e) What repair and/or maintenance, if any, was done.

[Statutory Authority: RCW 70.98.050. 00-08-013, § 246-243-120, filed 3/24/00, effective 4/24/00; 94-01-073, § 246-243-120, filed 12/9/93, effective 1/9/94. Statutory Authority: RCW 70.98.050 and 70.98.080. 91-15-112 (Order 184), § 246-243-120, filed 7/24/91, effective 8/24/91. Statutory Authority: RCW 43.70.040. 91-02-049 (Order 121), recodified as § 246-243-120, filed 12/27/90, effective 1/31/91. Statutory Authority: RCW 70.98.080. 83-19-050 (Order 2026), § 402-36-095, filed 9/16/83. Statutory Authority: RCW 70.98.050. 81-01-011 (Order 1570), § 402-36-095, filed 12/8/80; Order 1084, § 402-36-095, filed 1/14/76.]

WAC 246-243-130 Limitations—Personal radiation safety requirements for radiographers and radiographers' assistants. (1) No licensee shall permit any individual to act as a radiographer as defined in this chapter until such individual:

(a) Has been instructed in the subjects outlined in WAC 246-243-230, in addition to a minimum of two months of on-the-job training, and is certified through a radiographer certification program by a certifying entity in accordance with the criteria specified in WAC 246-243-250, Appendix C or equivalent regulations of the United States Nuclear Regulatory Commission or an agreement state. The department maintains a list of recognized certifying entities for reference. The licensee may, until January 1, 2001, allow an individual who has not met the requirement of this subsection, to act as a radiographer after the individual has received training in the subjects outlined in WAC 246-243-230 and demonstrated an understanding of these subjects by successful completion of a written examination that was previously submitted to and approved by the department;

(b) Has received copies of and instruction in the regulations contained in chapters 246-220, 246-221, 246-222, 246-231, and 246-243 WAC, in the United States Department of Transportation regulations as referenced in chapter 246-231 WAC, and the applicable sections of appropriate license(s), and the licensee's operating and emergency procedures, and shall have demonstrated understanding thereof by successful completion of a written or oral examination covering this material;

(c) Has received training in the use of the licensee's radiographic exposure devices, sealed sources, in the daily inspection of devices and associated equipment, and in the use of radiation survey instruments; and

(d) Has demonstrated understanding of the use of radiographic exposure devices, sources, survey instruments and associated equipment described in subsection (1)(c) of this section by successful completion of a practical examination on the subjects covered.

(2) No licensee shall permit any individual to act as a radiographer's assistant as defined in this chapter until such individual:

(a) Has received copies of and instruction in the regulations contained in chapters 246-220, 246-221, 246-222, 246-231, and 246-243 WAC, in the United States Department of Transportation regulations as referenced in chapter 246-231 WAC, and the applicable sections of appropriate license(s), and the licensee's operating and emergency procedures;

(b) Has developed competence to use under the personal supervision of the radiographer the radiographic exposure devices, sealed sources, associated equipment, and radiation survey instruments which will be employed in the individual's assignment; and

(c) Has demonstrated understanding of the instructions provided under (a) of this subsection by successfully completing a written test on the subjects covered and has demonstrated competence in the use of the hardware described in (b) of this subsection by successful completion of a practical examination on the use of such hardware.

(3) Each licensee shall maintain, for inspection by the department, records of training and certification which demonstrate that the requirements of subsections (1) and (2) of this section are met. These records shall be maintained for three years after the record is made. The record shall include:

(a) Radiographer certification documents and verification of certification status;

(b) Copies of written tests;

(c) Dates of oral and practical examinations; and

(d) Names of individuals conducting and receiving the oral and practical examinations.

(4) Licensees will have until January 1, 2001, to comply with the certification requirements specified in subsection (1)(a) of this section, and the additional training requirements specified in subsections (1)(b) and (2)(a) of this section.

[Statutory Authority: RCW 70.98.050. 00-08-013, § 246-243-130, filed 3/24/00, effective 4/24/00; 94-01-073, § 246-243-130, filed 12/9/93, effective 1/9/94. Statutory Authority: RCW 70.98.050 and 70.98.080. 91-15-112 (Order 184), § 246-243-130, filed 7/24/91, effective 8/24/91. Statutory Authority: RCW 43.70.040. 91-02-049 (Order 121), recodified as § 246-243-130, filed 12/27/90, effective 1/31/91. Statutory Authority: RCW 70.98.080. 83-19-050 (Order 2026), § 402-36-100, filed 9/16/83. Statutory Authority: RCW 70.98.050. 81-01-011 (Order 1570), § 402-36-100, filed 12/8/80; Order 1084, § 402-36-100, filed 1/14/76; Order 1, § 402-36-100, filed 1/8/69; Rules (part), filed 10/26/66.]

WAC 246-243-140 Operating and emergency procedures. The licensee's operating and emergency procedures shall include instructions in at least the following:

(1) The handling and use of sources of radiation to be employed such that no individual is likely to be exposed to radiation doses in excess of the limits established in chapter 246-221 WAC Standards for protection against radiation;

(2) Methods and occasions for conducting radiation surveys;

(3) Methods for controlling access to radiographic areas;

(4) Methods and occasions for locking and securing sources of radiation including radiographic exposure devices, transport and storage containers, and sealed sources;

(5) Personnel monitoring and the use of personnel monitoring equipment including steps that must be taken immediately by radiography personnel if a pocket dosimeter is found to be off-scale or an alarm rate meter alarms unexpectedly;

(6) Transportation to field locations, including packing of sources of radiation in the vehicles, placarding of vehicles when needed, and control of sources of radiation during transportation;

(7) Minimizing exposure of individuals in the event of an accident;

(8) Notifying proper personnel in the event of a theft, loss, overexposure or accident involving sources of radiation;

(9) Maintenance of records;

(10) The inspection, maintenance, and operability checks of radiographic exposure devices, survey instruments, transport containers, and storage containers;

(11) Identifying and reporting defects and noncompliance as required by these regulations; and

(12) Source recovery procedures if the licensee will perform source recovery.

[Statutory Authority: RCW 70.98.050. 00-08-013, § 246-243-140, filed 3/24/00, effective 4/24/00; 94-01-073, § 246-243-140, filed 12/9/93, effective 1/9/94. Statutory Authority: RCW 70.98.050 and 70.98.080. 91-15-112 (Order 184), § 246-243-140, filed 7/24/91, effective 8/24/91. Statutory Authority: RCW 43.70.040. 91-02-049 (Order 121), recodified as § 246-243-140, filed 12/27/90, effective 1/31/91. Statutory Authority: RCW 70.98.080. 83-19-050 (Order 2026), § 402-36-110, filed 9/16/83. Statutory Authority: RCW 70.98.050. 81-01-011 (Order 1570), § 402-36-110, filed 12/8/80; Order 1084, § 402-36-110, filed 1/14/76; Order 708, § 402-36-110, filed 8/24/72; Order 1, § 402-36-110, filed 7/2/71; Order 1, § 402-36-110, filed 1/8/69; Rules (part), filed 10/26/66.]

WAC 246-243-141 Copies of operating and emergency procedures. Each licensee shall maintain a copy of current operating and emergency procedures until the department terminates the license. Superseded material shall be retained for three years after the change is approved.

[Statutory Authority: RCW 70.98.050. 00-08-013, § 246-243-141, filed 3/24/00, effective 4/24/00.]

WAC 246-243-150 Personnel monitoring control. (1) A licensee may not permit any individual to act as a radiographer or as a radiographer's assistant unless, at all times during radiographic operations, the individual wears a direct reading pocket dosimeter, an alarming rate meter, and a personnel dosimeter that is processed and evaluated by an accredited National Voluntary Laboratory Accreditation Program (NVLAP) processor on the trunk of the body. In permanent facilities where other appropriate alarming or warning devices are in routine use, the wearing of an alarming rate meter is not required.

(a) Pocket dosimeters must be capable of measuring exposures from zero to at least 200 milliroentgens. Electronic personal dosimeters may only be used in place of ion-chamber pocket dosimeters.

(b) Each personnel dosimeter shall be assigned to and worn by only one individual.

(c) Film badges must be replaced at periods not to exceed one month and other personnel dosimeters processed and evaluated by an accredited NVLAP processor must be replaced at periods not to exceed three months.

(d) After replacement, each personnel dosimeter must be processed as soon as possible.

(2)(a) Direct reading dosimeters such as pocket dosimeters or electronic personal dosimeters shall be read and exposures recorded at the beginning and end of each shift. Pocket dosimeters shall be charged at the beginning of each shift. Pocket dosimeters shall be checked annually at periods not to

exceed twelve months for correct response to radiation. Acceptable dosimeters shall read within plus or minus twenty percent of the true radiation exposure.

(b) Each alarming rate meter must:

(i) Be checked to ensure that the alarm functions properly (sounds) prior to use at the start of each shift;

(ii) Be set to give an alarm signal at a maximum preset rate of 5 mSv/hr. (500 mR/hr.);

(iii) Require special means to change the preset alarm functions; and

(iv) Be calibrated annually at periods not to exceed twelve months for correct response to radiation: Acceptable rate meters must alarm within plus or minus twenty percent of the true radiation exposure rate.

(3) If an individual's pocket dosimeter is found to be off-scale, or if his or her electronic personal dosimeter reads greater than 2 millisieverts (200 millirems), and the possibility of radiation exposure cannot be ruled out as the cause, the individual's personnel dosimeter must be sent for processing within twenty-four hours. In addition, the individual may not resume work associated with licensed material use until a determination of the individual's radiation exposure has been made. This determination shall be made by the RSO or the RSO's designee.

(4) If the personnel dosimeter required by this section is lost or damaged, the worker shall cease work immediately until a replacement personnel dosimeter is provided and the exposure is calculated for the time period from issuance to loss or damage of the personnel dosimeter.

(5) Each licensee shall maintain the following exposure records:

(a) Direct reading dosimeter readings and yearly operability checks required by subsection (2) of this section for three years after the record is made.

(b) Records of alarm rate meter calibrations for three years after the record is made.

(c) Reports received from the personnel dosimeter accredited NVLAP processor until the department terminates the licensee.

(d) Records of estimates of exposures as a result of: Off-scale personal direct reading dosimeters, or lost or damaged personnel dosimeters, until the department terminates the license. The time period for which the personnel dosimeter was lost or damaged shall be included in the records.

[Statutory Authority: RCW 70.98.050. 03-12-062, § 246-243-150, filed 6/2/03, effective 7/3/03; 00-08-013, § 246-243-150, filed 3/24/00, effective 4/24/00; 94-01-073, § 246-243-150, filed 12/9/93, effective 1/9/94. Statutory Authority: RCW 70.98.050 and 70.98.080. 91-15-112 (Order 184), § 246-243-150, filed 7/24/91, effective 8/24/91. Statutory Authority: RCW 43.70.040. 91-02-049 (Order 121), recodified as § 246-243-150, filed 12/27/90, effective 1/31/91. Statutory Authority: RCW 70.98.080. 83-19-050 (Order 2026), § 402-36-120, filed 9/16/83. Statutory Authority: RCW 70.98.050. 81-01-011 (Order 1570), § 402-36-120, filed 12/8/80; Order 1084, § 402-36-120, filed 1/14/76; Order 1, § 402-36-120, filed 1/8/69; Rules (part), filed 10/26/66.]

WAC 246-243-160 Supervision of radiographers' assistants. Whenever a radiographer's assistant uses radiographic exposure devices, uses sealed sources or associated equipment, or conducts radiation surveys required by WAC 246-243-190 to determine that the sealed source has returned to the shielded position after an exposure, he or she shall be under the personal supervision of a radiographer, as defined in WAC 246-243-020. Personal supervision shall include (1) the radiographer's personal presence at the site where the sealed sources are being used, (2) the ability of the radiographer to communicate and give immediate assistance if required, and (3) the radiographer's ability to observe the performance of his/her assistant during the operations referred to in this section.

[Statutory Authority: RCW 70.98.050. 00-08-013, § 246-243-160, filed 3/24/00, effective 4/24/00; 94-01-073, § 246-243-160, filed 12/9/93, effective 1/9/94. Statutory Authority: RCW 70.98.050 and 70.98.080. 91-15-112 (Order 184), § 246-243-160, filed 7/24/91, effective 8/24/91. Statutory Authority: RCW 43.70.040. 91-02-049 (Order 121), recodified as § 246-243-160, filed 12/27/90, effective 1/31/91. Statutory Authority: RCW 70.98.080. 83-19-050 (Order 2026), § 402-36-125, filed 9/16/83. Statutory Authority: RCW 70.98.050. 81-01-011 (Order 1570), § 402-36-125, filed 12/8/80.]

WAC 246-243-170 Security—Precautionary procedures in radiographic operations. (1) During each radiographic operation, the radiographer or radiographer's assistant shall maintain continuous direct visual surveillance of the operation to protect against unauthorized entry into a high radiation area, as defined in chapter 246-220 WAC except:

At permanent radiographic installations where all entryways are locked and the requirements of WAC 246-243-220 are met.

(2) When not in operation or when not under direct surveillance, portable radiation exposure devices shall be physically secured to prevent removal by unauthorized personnel.

[Statutory Authority: RCW 70.98.050. 00-08-013, § 246-243-170, filed 3/24/00, effective 4/24/00; 94-01-073, § 246-243-170, filed 12/9/93, effective 1/9/94. Statutory Authority: RCW 70.98.050 and 70.98.080. 91-15-112 (Order 184), § 246-243-170, filed 7/24/91, effective 8/24/91. Statutory Authority: RCW 43.70.040. 91-02-049 (Order 121), recodified as § 246-243-170, filed 12/27/90, effective 1/31/91. Statutory Authority: RCW 70.98.050. 81-01-011 (Order 1570), § 402-36-130, filed 12/8/80; Order 1084, § 402-36-130, filed 1/14/76; Order 1, § 402-36-130, filed 1/8/69; Rules (part), filed 10/26/66.]

WAC 246-243-180 Posting. All areas in which industrial radiography is being performed shall be conspicuously posted as required by WAC 246-221-120. Exceptions listed in WAC 246-221-130 do not apply to industrial radiographic operations.

[Statutory Authority: RCW 70.98.050. 00-08-013, § 246-243-180, filed 3/24/00, effective 4/24/00; 94-01-073, § 246-243-180, filed 12/9/93, effective 1/9/94. Statutory Authority: RCW 70.98.050 and 70.98.080. 91-15-112 (Order 184), § 246-243-180, filed 7/24/91, effective 8/24/91. Statutory Authority: RCW 43.70.040. 91-02-049 (Order 121), recodified as § 246-243-180, filed 12/27/90, effective 1/31/91. Statutory Authority: RCW 70.98.050. 81-01-011 (Order 1570), § 402-36-140, filed 12/8/80; Order 1084, § 402-36-140, filed 1/14/76; Order 1, § 402-36-140, filed 1/8/69; Rules (part), filed 10/26/66.]

WAC 246-243-190 Radiation surveys and survey records. The licensee shall:

(1) Conduct surveys with a calibrated and operable radiation survey instrument that meets the requirements of WAC 246-243-080.

(2) Using a survey instrument meeting the requirements of subsection (1) of this section, conduct a survey of the radiographic exposure device and the guide tube after each exposure when approaching the device or the guide tube. The survey shall determine that the sealed source has returned to

its shielded position before exchanging films, repositioning the exposure head, or dismantling equipment.

(3) Conduct a survey of the radiographic exposure device with a calibrated radiation survey instrument any time the source is exchanged and whenever a radiographic exposure device is placed in a storage area to ensure that the sealed source is in its shielded position.

(4) Conduct a physical radiation survey of the boundary of the restricted area during radiographic operations not employing shielded room radiography. The maximum survey reading at the boundary shall be recorded. The records shall indicate approximate distance from source to boundaries, whether or not the exposed source is collimated and any occupied areas with exposure levels greater than 2 mR in any hour during radiographic operations.

(5) Maintain a record of each exposure device survey conducted before the device is placed in storage if that survey is the last one performed in the workday, and records required by subsection (4) of this section, including the model and serial number of the survey meter used, for inspection by the department for three years after completion of the survey. If the survey was used to determine an individual's exposure, however, the records of the survey shall be maintained until the department authorizes their disposition.

[Statutory Authority: RCW 70.98.050. 00-08-013, § 246-243-190, filed 3/24/00, effective 4/24/00; 94-01-073, § 246-243-190, filed 12/9/93, effective 1/9/94. Statutory Authority: RCW 70.98.050 and 70.98.080. 92-06-008 (Order 245), § 246-243-190, filed 2/21/92, effective 3/23/92. Statutory Authority: RCW 43.70.040. 91-02-049 (Order 121), recodified as § 246-243-190, filed 12/27/90, effective 1/31/91. Statutory Authority: RCW 70.98.080. 83-19-050 (Order 2026), § 402-36-150, filed 9/16/83. Statutory Authority: RCW 70.98.050. 81-01-011 (Order 1570), § 402-36-150, filed 12/8/80; Order 1084, § 402-36-150, filed 1/14/76; Order 1, § 402-36-150, filed 1/8/69; Rules (part), filed 10/26/66.]

WAC 246-243-195 Reporting. (1) In addition to the reporting requirements specified in other sections of the regulations, each licensee shall provide a written report to the department within thirty days of the occurrence of any of the following incidents involving radiographic equipment:

(a) Unintentional disconnection of the source assembly from the control cable.

(b) Inability to retract the source assembly to its fully shielded position and secure it in this position.

(c) Failure of any component (critical to safe operation of the device) to properly perform its intended function.

(2) The licensee shall include the following information in each report submitted under subsection (1) of the section.

(a) A description of the equipment problem;

(b) Cause of each incident, if known;

(c) Manufacturer and model number of equipment involved in the incident;

(d) Place, time, and date of incident;

(e) Actions taken to reestablish normal operations;

(f) Corrective actions taken or planned to prevent recurrence;

(g) Qualifications of personnel involved in the incident.

(3) Reports of overexposure submitted under WAC 246-221-260 which involve failure of safety components of radiographic equipment must also include the information specified in subsection (2) of this section.

(4) Any licensee conducting radiographic operations or storing radioactive material at any location not listed on the license for a period in excess of one hundred eighty days in a calendar year, shall notify the department prior to exceeding the one hundred eighty days.

[Statutory Authority: RCW 70.98.050. 00-08-013, § 246-243-195, filed 3/24/00, effective 4/24/00; 94-01-073, § 246-243-195, filed 12/9/93, effective 1/9/94.]

WAC 246-243-200 Records required at temporary job sites. Each licensee conducting radiographic operations at a temporary site shall have copies of the following documents and records available at that site for inspection by the department:

(1) Appropriate license;

(2) Operating and emergency procedures;

(3) Applicable regulations;

(4) Survey records required pursuant to WAC 246-243-190 for the period of operation at the site;

(5) Direct reading dosimeter records for the period of operation at the site;

(6) The latest radiation survey instrument calibration record and leak test record for specific devices in use at the site;

(7) The latest calibration record for alarm rate meters and operability checks of pocket dosimeters and/or electronic personal dosimeters as required by WAC 246-243-150;

(8) Utilization records for each radiographic exposure device dispatched from that location as required by WAC 246-243-110;

(9) Records of equipment problems identified in daily checks of equipment as required by WAC 246-243-120;

(10) Records of alarm system and entrance control checks required by WAC 246-243-220, if applicable;

(11) The shipping papers for the transportation of radioactive materials; and

(12) When operating under reciprocity pursuant to WAC 246-232-040, a copy of the NRC or agreement state license authorizing the use of radioactive material.

[Statutory Authority: RCW 70.98.050. 00-08-013, § 246-243-200, filed 3/24/00, effective 4/24/00; 94-01-073, § 246-243-200, filed 12/9/93, effective 1/9/94. Statutory Authority: RCW 70.98.050 and 70.98.080. 91-15-112 (Order 184), § 246-243-200, filed 7/24/91, effective 8/24/91. Statutory Authority: RCW 43.70.040. 91-02-049 (Order 121), recodified as § 246-243-200, filed 12/27/90, effective 1/31/91. Statutory Authority: RCW 70.98.050. 81-01-011 (Order 1570), § 402-36-153, filed 12/8/80.]

WAC 246-243-203 Form of records. Each record required by this chapter must be legible throughout the specified retention period. The record may be the original or a reproduced copy or a microform provided that the copy or microform is authenticated by authorized personnel and that the microform is capable of reproducing a clear copy throughout the required retention period. The record may also be stored in electronic media with the capability for producing legible, accurate, and complete records during the required retention period. Records, such as letters, drawings, and specifications, must include all pertinent information, such as stamps, initials, and signatures. The licensee shall maintain adequate safeguards against tampering with and loss of records.

[Statutory Authority: RCW 70.98.050. 00-08-013, § 246-243-203, filed 3/24/00, effective 4/24/00.]

WAC 246-243-205 Temporary job site notification. (1) Each licensee shall provide notification to the department as required by the department, preferably twenty-four hours but no later than two hours, prior to beginning radiographic operations at a temporary job site. The notification will be given by using the prescribed 1-800 telephone notification system. The notification shall include:

(a) Name and office telephone number of the licensee;

(b) Radioactive materials license number;

(c) Address or directions to the temporary job site;

(d) Specific date(s), time(s), and duration of expected radiographic operations;

(e) Names of radiographers and, if applicable, radiographer assistants taking part in the radiographic operations; and

(f) Name and telephone number of a contact person at the temporary job site.

(2) In the event that operations at a temporary job site continue for longer than thirty days, the licensee will renotify the department, as required by subsection (1) of this section, each succeeding month.

[Statutory Authority: RCW 70.98.050. 94-01-073, § 246-243-205, filed 12/9/93, effective 1/9/94.]

WAC 246-243-220 Special requirements for permanent radiographic installation. (1) Each entrance that is used for personnel access to the high radiation area in a permanent radiographic installation to which this section applies shall have either:

(a) An entrance control of the type described in WAC 246-221-102(1) that reduces the radiation level upon entry into the area; or

(b) Both conspicuous visible and audible warning signals to warn of the presence of radiation. The visible signal shall be actuated by radiation whenever the source is exposed. The audible signal shall be actuated when an attempt is made to enter the installation while the source is exposed.

(2) The alarm system must be tested for proper operation with a radiation source each day before the installation is used for radiographic operations. The test must include a check of both the visible and audible signals. Entrance control devices that reduce the radiation level upon entry (designated in subsection (1)(a) of this section) shall be tested monthly. If an entrance control device or an alarm is operating improperly, it must be immediately labeled as defective and repaired within seven calendar days. The facility may continue to be used during this seven-day period, provided the licensee implements the continuous surveillance requirements of WAC 246-243-170 and uses an alarming rate meter. Test records for entrance controls and audible and visual alarm must be maintained for three years after the record is made.

(3) The department shall review and approve, in advance of construction, plans for permanent radiographic installations whose construction had not commenced by the effective date of these regulations. Construction of the permanent facility shall be in accordance with the plans approved by the department.

(4) A physical radiation survey shall be conducted and results recorded following construction or major modification of the facility to be used in the installation. Radiography shall not be conducted if exposure levels in unrestricted areas are greater than 2 mR in any hour. Any increase in source strength will require resurvey of the installation prior to the conduct of industrial radiography.

[Statutory Authority: RCW 70.98.050. 00-08-013, § 246-243-220, filed 3/24/00, effective 4/24/00; 94-01-073, § 246-243-220, filed 12/9/93, effective 1/9/94. Statutory Authority: RCW 70.98.050 and 70.98.080. 91-15-112 (Order 184), § 246-243-220, filed 7/24/91, effective 8/24/91. Statutory Authority: RCW 43.70.040. 91-02-049 (Order 121), recodified as § 246-243-220, filed 12/27/90, effective 1/31/91. Statutory Authority: RCW 70.98.080. 83-19-050 (Order 2026), § 402-36-157, filed 9/16/83. Statutory Authority: RCW 70.98.050. 81-01-011 (Order 1570), § 402-36-157, filed 12/8/80.]

WAC 246-243-230 Appendix A—Minimum subjects to be covered in training radiographers. (1) *Fundamentals of radiation safety*

(a) Characteristics of ionizing radiation

(b) Units of radiation dose and quantity of radioactivity

(c) Hazards of exposure to radiation

(i) Radiation protection standards

(ii) Biological effects of radiation dose

(d) Levels of radiation from sources of radiation

(e) Methods of controlling radiation dose

(i) Working time

(ii) Working distances

(iii) Shielding

(2) *Radiation detection instrumentation to be used*

(a) Use of radiation survey instruments

(i) Operation

(ii) Calibration

(iii) Limitations

(b) Survey techniques

(c) Use of personnel monitoring equipment

(i) Film badges

(ii) Pocket dosimeters

(iii) Thermoluminescent dosimeters

(iv) Alarming rate meters

(3) *Radiographic equipment to be used*

(a) Operation and control of remote handling equipment, radiographic exposure equipment, and storage containers, including pictures or models of source assemblies (pigtails)

(b) Inspection and maintenance of equipment

(c) Storage, control, and disposal of licensed material

(4) *The requirements of pertinent federal and state regulations*

(5) *The licensee's written operating and emergency procedures*

(6) *Case histories of radiography accidents.*

[Statutory Authority: RCW 70.98.050. 00-08-013, § 246-243-230, filed 3/24/00, effective 4/24/00; 94-01-073, § 246-243-230, filed 12/9/93, effective 1/9/94. Statutory Authority: RCW 43.70.040. 91-02-049 (Order 121), recodified as § 246-243-230, filed 12/27/90, effective 1/31/91. Statutory Authority: RCW 70.98.050. 81-01-011 (Order 1570), § 402-36-160, filed 12/8/80; Order 1084, § 402-36-160, filed 1/14/76; Order 1, § 402-36-160, filed 1/8/69; Rules (part), filed 10/26/66.]

WAC 246-243-240 Appendix B—General guidelines for inspection of radiography equipment. (1) Panoramic devices (devices in which the source is physically removed

from shielded container during exposure) should be inspected for:

(a) Radiographic exposure unit;

(i) Abnormal surface radiation levels anywhere on camera;

(ii) Condition of safety plugs;

(iii) Proper operation of locking mechanism;

(iv) Condition of pigtail connector;

(v) Alignment of "S" tube with exit port;

(vi) Condition of carrying device (straps, handle, etc.);

(vii) Proper labeling;

(b) Source tube;

(i) Rust, corrosion, dirt, or sludge buildup inside the source tube;

(ii) Condition of source tube connector;

(iii) Condition of source stop;

(iv) Kinks or damage that could prevent proper operation;

(c) Control cables and drive mechanism;

(i) Proper drive mechanism for this camera, if appropriate;

(ii) Changes in general operating characteristics;

(iii) Condition of connector on drive cable;

(iv) Drive cable flexibility, wear, and rust;

(v) Excessive wear or damage to crank assembly parts;

(vi) Damage to drive cable conduit that could prevent the cable from moving freely;

(vii) Connection of the control cable connector with the pigtail connector for proper mating;

(viii) Proper operation of source position indicator, if applicable.

(2) Directional beam devices should be inspected for:

(a) Abnormal surface radiation;

(b) Changes in the general operating characteristics of the unit;

(c) Proper operation of shutter mechanism;

(d) Chafing or binding of shutter mechanism;

(e) Damage to the device which might impair its operation;

(f) Proper operation of locking mechanism;

(g) Proper drive mechanism with this camera, if appropriate;

(h) Condition of carrying device (strap, handle, etc.);

(i) Proper labeling.

[Statutory Authority: RCW 70.98.050. 94-01-073, § 246-243-240, filed 12/9/93, effective 1/9/94. Statutory Authority: RCW 43.70.040. 91-02-049 (Order 121), recodified as § 246-243-240, filed 12/27/90, effective 1/31/91. Statutory Authority: RCW 70.98.080. 83-19-050 (Order 2026), § 402-36-165, filed 9/16/83.]

WAC 246-243-250 Appendix C—Radiographer certification. (1) Requirements for an independent certifying organization. An independent certifying organization shall:

(a) Be an organization such as a society or association, whose members participate in, or have an interest in, the fields of industrial radiography;

(b) Make its membership available to the general public nationwide that is not restricted because of race, color, religion, sex, age, national origin or disability;

(c) Have a certification program open to nonmembers, as well as members;

(d) Be an incorporated, nationally recognized organization that is involved in setting national standards of practice within its fields of expertise;

(e) Have an adequate staff, a viable system for financing its operations, and a policy- and decision-making review board;

(f) Have a set of written organizational by-laws and policies that provide adequate assurance of lack of conflict of interest and a system for monitoring and enforcing those by-laws and policies;

(g) Have a committee, whose members can carry out their responsibilities impartially, to review and approve the certification guidelines and procedures, and to advise the organization's staff in implementing the certification program.

(h) Have a committee, whose members can carry out their responsibilities impartially, to review complaints against certified individuals and to determine appropriate sanctions;

(i) Have written procedures describing all aspects of its certification program, maintain records of the current status of each individual's certification and the administration of its certification program;

(j) Have procedures to ensure that certified individuals are provided due process with respect to the administration of its certification program, including the process of becoming certified and any sanctions imposed against certified individuals;

(k) Have procedures for proctoring examinations, including qualifications for proctors. These procedures must ensure that the individuals proctoring each examination are not employed by the same company or corporation (or a wholly owned subsidiary of such company or corporation) as any of the examinees;

(l) Exchange information about certified individuals with the department, the US Nuclear Regulatory Commission, other independent certifying organizations and/or agreement states and allow periodic review of its certification program and related records; and

(m) Provide a description to the department of its procedures for choosing examination sites and for providing an appropriate examination environment.

(2) Requirements for certification programs. All certification programs must:

(a) Require applicants for certification to:

(i) Receive training in the topics set forth in WAC 246-243-230 or equivalent NRC or agreement state regulations; and

(ii) Satisfactorily complete a written examination covering these topics;

(b) Require applicants for certification to provide documentation that demonstrates that the applicant has:

(i) Received training in the topics set forth in WAC 246-243-230 or equivalent NRC or agreement state regulations;

(ii) Satisfactorily completed a minimum period of on-the-job training; and

(iii) Received verification by an agreement state or a NRC licensee that the applicant has demonstrated the capability of independently working as a radiographer;

(c) Include procedures to ensure that all examination questions are protected from disclosure;

(d) Include procedures for denying an application, revoking, suspending, and reinstating a certificate;

(e) Provide a certification period of not less than three years nor more than five years;

(f) Include procedures for renewing certifications and, if the procedures allow renewals without examination, require evidence of recent full-time employment and annual refresher training;

(g) Provide a timely response to inquiries, by telephone or letter, from members of the public, about an individual's certification status.

(3) Requirements for written examinations.

All examinations must be:

(a) Designed to test an individual's knowledge and understanding of the topics listed in WAC 246-243-230 or equivalent NRC or agreement state requirements;

(b) Written in a multiple-choice format;

(c) Have test items drawn from a question bank containing psychometrically valid questions based on the material in WAC 246-243-230.

[Statutory Authority: RCW 70.98.050. 00-08-013, § 246-243-250, filed 3/24/00, effective 4/24/00.]

Chapter 246-244 WAC
RADIATION PROTECTION—WIRELINE SERVICES

WAC

246-244-001	Purpose.
246-244-010	Scope.
246-244-020	Definitions.
246-244-030	Agreement with well owner or operator.
246-244-040	Limits on levels of radiation.
246-244-050	Storage precautions.
246-244-060	Transport precautions.
246-244-070	Radiation survey instruments.
246-244-080	Leak testing of sealed sources.
246-244-090	Inventories.
246-244-100	Utilization logs/records.
246-244-110	Design, performance, and certification criteria for sealed sources used in downhole operations.
246-244-115	Energy compensation sources and tritium neutron generator target sources.
246-244-120	Labeling.
246-244-130	Inspection and maintenance.
246-244-140	Training requirements.
246-244-150	Operating and emergency procedures.
246-244-160	Personnel monitoring.
246-244-170	Radioactive contamination control.
246-244-180	Security.
246-244-190	Handling tools.
246-244-200	Subsurface tracer studies.
246-244-210	Radiation surveys.
246-244-220	Documents and records required at field stations.
246-244-230	Documents and records required at temporary job sites.
246-244-240	Notification of incidents, abandonment, and lost sources.

WAC 246-244-001 Purpose. This chapter establishes radiation safety requirements for persons using sources of radiation for wireline service operations including mineral logging, radioactive markers, and/or subsurface tracers studies. The requirements of this chapter are in addition to, and not in substitution for, requirements of chapters 246-220, 246-221, 246-222, 246-232, and 246-235 WAC.

[Statutory Authority: RCW 70.98.050 and 70.98.080. 91-15-112 (Order 184), § 246-244-001, filed 7/24/91, effective 8/24/91. Statutory Authority: RCW 43.70.040. 91-02-049 (Order 121), recodified as § 246-244-001, filed 12/27/90, effective 1/31/91. Statutory Authority: RCW 70.98.080. 87-01-031 (Order 2450), § 402-38-010, filed 12/11/86.]

WAC 246-244-010 Scope. The regulations in this chapter apply to all licensees who use sources of radiation for wireline service operations, including mineral logging, radioactive markers, uranium sinker bars, or subsurface tracer studies.

[Statutory Authority: RCW 43.70.040. 91-02-049 (Order 121), recodified as § 246-244-010, filed 12/27/90, effective 1/31/91. Statutory Authority: RCW 70.98.080. 87-01-031 (Order 2450), § 402-38-025, filed 12/11/86.]

WAC 246-244-020 Definitions. As used in this chapter, the following definitions apply:

(1) "Casing" means a metal pipe or tube used as a lining for oil or gas wells to prevent collapse of the well-bore.

(2) "Energy compensation source" (ECS) means a small sealed source, with an activity not exceeding 3.7 MBq (100 microcuries), used within a logging tool, or other tool components, to provide a reference standard to maintain the tool's calibration when in use.

(3) "Field station" means a facility where radioactive sources may be stored or used and from which equipment is dispatched to temporary job sites.

(4) "Fresh water aquifer" means a geological formation that is capable of yielding a significant amount of fresh water to a well or spring.

(5) "Injection tool" means a device used for controlled subsurface injection of radioactive tracer material.

(6) "Irretrievable well-logging source" means any sealed source containing licensed material that is pulled off or not connected to the wireline that suspends the source in the well and for which all reasonable effort at recovery has been expended.

(7) "Logging assistant" means an individual who assists the logging supervisor in performing the well-logging operations.

(8) "Logging supervisor" means an individual who provides personal supervision of the use of licensed material at the temporary job site and who is responsible to the licensee for assuring compliance with requirements of the department's regulations and the conditions of the license.

(9) "Logging tool" means a device used subsurface to perform well-logging.

(10) "Mineral logging" means any logging performed for the purpose of mineral (including water) exploration other than oil or gas.

(11) "Personal supervision" means guidance and instruction by the supervisor who is physically present at the job site and watching the performance of the operation in such proximity that contact is maintained and immediate assistance given as required.

(12) "Radioactive marker" means licensed material used for the purpose of depth determination or direction orientation. This term includes radioactive collar markers and radioactive iron nails.

(13) "Sealed source" means any licensed material that is encased in a capsule designed to prevent leakage or escape of the radioactive material.

(14) "Source holder" means the housing or assembly into which a radioactive source is placed for the purpose of facilitating the handling and use of such source in well-logging operations.

(15) "Subsurface tracer study" means, for the purpose of this chapter, the release of unsealed licensed material or a substance labeled with licensed material in a single well or multiple wells for the purpose of tracing the movement or position of the material or substance in the well-bore or adjacent formation(s) (this term does not include the use of licensed material in field flooding studies).

(16) "Surface casing" means a pipe or tube used as a lining in a well to isolate the fresh water zone from the well.

(17) "Temporary job site" means any location to which radioactive materials have been dispatched or taken to perform wireline service operations or subsurface tracer studies.

(18) "Tritium neutron generator target source" means a tritium source used within a neutron generator tube to produce neutrons for use in well-logging applications.

(19) "Uranium sinker bar" means a weight containing depleted uranium used for the purpose of providing additional force to pull a logging tool down toward the bottom of a well.

(20) "Well-bore" means any drilled hole in which wireline service operations and/or subsurface tracer studies are performed.

(21) "Well-logging" means the lowering and raising of measuring devices or tools which contain sources of radiation into well-bores or cavities (salt domes, etc.) for the purpose of obtaining information about the well and/or adjacent formations which may be used in oil, gas, mineral or geological explorations.

(22) "Well-logging operation" means any activity involving licensed material performed in a well, including well-logging, mineral logging, subsurface tracer studies, use of radioactive markers, radioactive iron nails, uranium sinker bars, and radioactive sands, and transportation or storage of same.

(23) "Wireline" means a cable containing one or more electrical conductors which is used to lower and raise logging tools in the well-bore.

(24) "Wireline service operation" means any evaluation or mechanical service which is performed in the well-bore using devices containing radioactive material on a wireline.

[Statutory Authority: RCW 70.98.050. 03-12-062, § 246-244-020, filed 6/2/03, effective 7/3/03. Statutory Authority: RCW 43.70.040. 91-02-049 (Order 121), recodified as § 246-244-020, filed 12/27/90, effective 1/31/91. Statutory Authority: RCW 70.98.080. 87-01-031 (Order 2450), § 402-38-030, filed 12/11/86.]

WAC 246-244-030 Agreement with well owner or operator. (1) A licensee may perform well logging with a sealed source only after the licensee has a written agreement with the employing well owner or operator. This written agreement must identify who will meet the following requirements:

(a) If a sealed source becomes lodged in the well, a reasonable effort will be made to recover it.

(b) A person may not attempt to recover a sealed source in a manner which, in the licensee's opinion, could result in its rupture.

(c) The radiation monitoring required in WAC 246-244-210 will be performed.

(d) If the environment, any equipment, or personnel are contaminated with licensed material, they must be decontaminated before release from the site or release for unrestricted use.

(e) If the sealed source is classified as irretrievable after reasonable efforts at recovery have been expended, the following requirements must be implemented within thirty days:

(i) Each irretrievable well-logging source must be immobilized and sealed in place with a cement plug;

(ii) A means to prevent inadvertent intrusion on the source, unless the source is not accessible to any subsequent drilling operations; and

(iii) A permanent identification plaque, constructed of long lasting material such as stainless steel, brass, bronze, or monel, must be mounted at the surface of the well, unless the mounting of the plaque is not practical. The size of the plaque must be at least 17 cm (7 inches) square and 3 mm (1/8-inch) thick. The plaque must contain—

(A) The word "CAUTION";

(B) The radiation symbol (the color requirement in WAC 246-221-120(1) need not be met);

(C) The date the source was abandoned;

(D) The name of the well owner or well operator, as appropriate;

(E) The well name and well identification number(s) or other designation;

(F) An identification of the sealed source(s) by radionuclide and quantity;

(G) The depth of the source and depth to the top of the plug; and

(H) An appropriate warning, such as, "DO NOT REENTER THIS WELL."

(2) The licensee shall retain a copy of the written agreement for three years after the completion of the well-logging operation.

(3) A licensee may apply, under WAC 246-220-050, for department approval, on a case-by-case basis, of proposed procedures to abandon an irretrievable well-logging source in a manner not otherwise authorized in subsection (1)(e) of this section.

(4) A written agreement between the licensee and the well owner or operator is not required if the licensee and the well owner or operator are part of the same corporate structure or otherwise similarly affiliated. However, the licensee shall still otherwise meet the requirements in subsection (1) of this section.

[Statutory Authority: RCW 70.98.050. 03-12-062, § 246-244-030, filed 6/2/03, effective 7/3/03. Statutory Authority: RCW 70.98.050 and 70.98.080. 91-15-112 (Order 184), § 246-244-030, filed 7/24/91, effective 8/24/91. Statutory Authority: RCW 43.70.040. 91-02-049 (Order 121), recodified as § 246-244-030, filed 12/27/90, effective 1/31/91. Statutory Authority: RCW 70.98.080. 87-01-031 (Order 2450), § 402-38-040, filed 12/11/86.]

WAC 246-244-040 Limits on levels of radiation. Sources of radiation shall be used, stored, and transported in such a manner that the transportation requirements of chapter 246-231 WAC and the dose limitation requirements of chapter 246-221 WAC are met.

[Statutory Authority: RCW 70.98.050. 99-15-105, § 246-244-040, filed 7/21/99, effective 8/21/99. Statutory Authority: RCW 70.98.050 and 70.98.080. 91-15-112 (Order 184), § 246-244-040, filed 7/24/91, effective 8/24/91. Statutory Authority: RCW 43.70.040. 91-02-049 (Order 121), recodified as § 246-244-040, filed 12/27/90, effective 1/31/91. Statutory

Authority: RCW 70.98.080. 87-01-031 (Order 2450), § 402-38-060, filed 12/11/86.]

WAC 246-244-050 Storage precautions. (1) Each source of radiation, except accelerators, shall be provided with a storage and/or transport container. Such containers shall be utilized. The container shall be provided with a lock (or tamper seal, for calibration sources) to prevent unauthorized removal of, or exposure to, the source(s) of radiation. Such locks shall be used each time the source of radiation is placed in the storage/transport container.

(2) Sources of radiation shall be stored in a manner which will minimize danger from explosion and/or fire.

[Statutory Authority: RCW 43.70.040. 91-02-049 (Order 121), recodified as § 246-244-050, filed 12/27/90, effective 1/31/91. Statutory Authority: RCW 70.98.080. 87-01-031 (Order 2450), § 402-38-080, filed 12/11/86.]

WAC 246-244-060 Transport precautions. (1) Transport containers shall be physically secured to the transporting vehicle to prevent accidental loss, tampering, or unauthorized removal.

(2) Transport of radioactive material shall be in accordance with applicable provisions of the United States Department of Transportation, as required by chapter 246-231 WAC.

[Statutory Authority: RCW 70.98.050. 99-15-105, § 246-244-060, filed 7/21/99, effective 8/21/99. Statutory Authority: RCW 70.98.050 and 70.98.080. 91-15-112 (Order 184), § 246-244-060, filed 7/24/91, effective 8/24/91. Statutory Authority: RCW 43.70.040. 91-02-049 (Order 121), recodified as § 246-244-060, filed 12/27/90, effective 1/31/91. Statutory Authority: RCW 70.98.080. 87-01-031 (Order 2450), § 402-38-100, filed 12/11/86.]

WAC 246-244-070 Radiation survey instruments. (1) The licensee or registrant shall maintain and use sufficient calibrated and operable radiation survey instruments at each field station and temporary job site to make physical radiation surveys as required. Instrumentation shall be capable of measuring 0.001 mSv (0.1 millirem) per hour through at least 0.5 mSv (50 millirem) per hour.

(2) Each radiation survey instrument shall be calibrated:

(a) At intervals not to exceed six months and after each instrument servicing;

(b) At energies and radiation levels appropriate for use;

(c) At two points located approximately one-third and two-thirds at full scale on each scale (for logarithmic scale, at midrange of each decade, and at two points of at least one decade); and

(d) Such that accuracy within ± 20 percent of the true radiation levels can be demonstrated on each scale.

(3) Each licensee shall have available additional calibrated and operable radiation detection instruments capable of detecting radiation and contamination levels that could be encountered during well-logging operations or during the event of an accident, e.g., an alpha meter in case of Am-241 source rupture, a contamination meter and probe, and a high level meter capable of detecting radiation levels up to at least one roentgen per hour. The licensee may own such instruments or may make prior arrangements to obtain them expeditiously from a second party as necessary.

(4) Calibration records shall be maintained for a period of at least three years for inspection by the department.

[Statutory Authority: RCW 70.98.050. 01-05-110, § 246-244-070, filed 2/21/01, effective 3/24/01. Statutory Authority: RCW 43.70.040. 91-02-049 (Order 121), recodified as § 246-244-070, filed 12/27/90, effective 1/31/91. Statutory Authority: RCW 70.98.080. 87-01-031 (Order 2450), § 402-38-120, filed 12/11/86.]

WAC 246-244-080 Leak testing of sealed sources. (1) Testing and recordkeeping requirements. Each licensee who uses a sealed source shall have the source tested for leakage periodically. The licensee shall keep a record of leak test results in units of becquerels (or microcuries) and retain the record for inspection by the department for three years after the leak test is performed.

(2) Method of testing. The wipe of a sealed source must be performed using a leak test kit or method approved by the department, an agreement state, a licensing state, or the United States Nuclear Regulatory Commission. The wipe sample must be taken from the nearest accessible point to the sealed source where contamination might accumulate. The wipe sample must be analyzed for radioactive contamination. The analysis must be capable of detecting the presence of 185 Bq (0.005 microcurie) of radioactive material on the test sample and must be performed by a person approved by the department, an agreement state, a licensing state, or the United States Nuclear Regulatory Commission to perform the analysis.

(3) Test frequency.

(a) Each sealed source (except an energy compensation source (ECS)) must be tested at intervals not to exceed six months. In the absence of a certificate from a transferor that a test has been made within the six months before the transfer, the sealed source may not be used until tested.

(b) Each ECS that is not exempt from testing in accordance with subsection (5) of this section must be tested at intervals not to exceed three years. In the absence of a certificate from a transferor that a test has been made within the three years before the transfer, the ECS may not be used until tested.

(4) Removal of leaking source from service.

(a) If the test conducted under subsections (1) and (2) of this section reveals the presence of 185 Bq (0.005 microcurie) or more of removable radioactive material, the licensee shall remove the sealed source from service immediately and have it decontaminated, repaired, or disposed by a department, an agreement state, a licensing state, or a United States Nuclear Regulatory Commission licensee that is authorized to perform these functions. The licensee shall check the equipment associated with the leaking source for radioactive contamination and, if contaminated, have it decontaminated or disposed of by a department, an agreement state, a licensing state, or a United States Nuclear Regulatory Commission licensee that is authorized to perform these functions.

(b) The licensee shall submit a report to the department within five days of receiving the test results. The report must describe the equipment involved in the leak, the test results, any contamination that resulted from the leaking source, and the corrective actions taken up to the time the report is made.

(5) Exemptions from testing requirements. The following sealed sources are exempt from the periodic leak test requirements set out in subsections (1) through (4) of this section:

(a) Hydrogen-3 (tritium) sources;

(b) Sources containing licensed material with a half-life of thirty days or less;

(c) Sealed sources containing licensed material in gaseous form;

(d) Sources of beta- or gamma-emitting radioactive material with an activity of 3.7 MBq (100 microcuries) or less; and

(e) Sources of alpha- or neutron-emitting radioactive material with an activity of 0.37 MBq (10 microcuries) or less.

[Statutory Authority: RCW 70.98.050. 03-12-062, § 246-244-080, filed 6/2/03, effective 7/3/03. Statutory Authority: RCW 70.98.050 and 70.98.-080. 91-15-112 (Order 184), § 246-244-080, filed 7/24/91, effective 8/24/91. Statutory Authority: RCW 43.70.040. 91-02-049 (Order 121), recodified as § 246-244-080, filed 12/27/90, effective 1/31/91. Statutory Authority: RCW 70.98.080. 87-01-031 (Order 2450), § 402-38-140, filed 12/11/86.]

WAC 246-244-090 Inventories. (1) Each licensee shall conduct a physical inventory at intervals not to exceed three months to account for all sources of radiation received and possessed. Records of such inventories shall be maintained for at least two years from the date of the inventory for inspection by the department and shall include the quantities, kinds, and serial numbers of sources of radiation, the location where such sources of radiation are assigned and/or stored, the date of the inventory, and the name of the individual conducting the inventory.

(2) Spotmarkers containing radioactive material shall be inventoried prior to arrival at a field site and prior to departure. Records of such inventories shall include the quantity and kinds of radioactive material, serial numbers where appropriate, the date and name of the person performing the inventory, and shall be maintained for inspection by the department.

[Statutory Authority: RCW 43.70.040. 91-02-049 (Order 121), recodified as § 246-244-090, filed 12/27/90, effective 1/31/91. Statutory Authority: RCW 70.98.080. 87-01-031 (Order 2450), § 402-38-160, filed 12/11/86.]

WAC 246-244-100 Utilization logs/records. Each licensee shall maintain current records, which shall be kept available for inspection by the department for two years from the date of recorded event, showing the following information for each source of radiation:

(1) Make, model, and serial number of each source of radiation used;

(2) The identity of the well-logging supervisor and logging assistants to whom assigned;

(3) The locations where used and dates of use; and

(4) In the case of tracer materials and/or radioactive markers, the utilization records shall also indicate the radionuclide and quantity of activity used in a particular well.

[Statutory Authority: RCW 43.70.040. 91-02-049 (Order 121), recodified as § 246-244-100, filed 12/27/90, effective 1/31/91. Statutory Authority: RCW 70.98.080. 87-01-031 (Order 2450), § 402-38-180, filed 12/11/86.]

WAC 246-244-110 Design, performance, and certification criteria for sealed sources used in downhole operations. (1) Each sealed source, except those containing radioactive material in gaseous form, used in downhole operations shall be certified by the manufacturer, or other testing organization acceptable to the department, to meet the following minimum criteria:

(a) Be of doubly encapsulated construction;

(b) Contain radioactive material whose chemical and physical forms are as insoluble and nondispersible, respectively, as practical; and

(c) Comply with subsection (2), (3), or (4) of this section.

(2) For a sealed source manufactured on or before July 14, 1989, a licensee may use the sealed source for use in well-logging applications if it meets the requirements of USASI N5.10-1968, "Classification of Sealed Radioactive Sources," or the requirements in subsection (3) or (4) of this section.

(3) For a sealed source manufactured after July 14, 1989, a licensee may use the sealed source for use in well-logging applications if it meets the oil-well logging requirements of ANSI/HPS N43.6-1997, "Sealed Radioactive Sources—Classification."

(4) For a sealed source manufactured after July 14, 1989, a licensee may use the sealed source for use in well-logging applications, if—

The sealed source's prototype has been tested and found to maintain its integrity after each of the following tests:

(a) Temperature. The test source must be held at -40°C for twenty minutes, 600°C for one hour, and then be subject to a thermal shock test with a temperature drop from 600°C to 20°C within fifteen seconds.

(b) Impact test. A 5 kg steel hammer, 2.5 cm in diameter, must be dropped from a height of 1 m onto the test source.

(c) Vibration test. The test source must be subject to a vibration from 25 Hz to 500 Hz at 5 g amplitude for thirty minutes.

(d) Puncture test. A 1 gram hammer and pin, 0.3 cm pin diameter, must be dropped from a height of 1 m onto the test source.

(e) Pressure test. The test source must be subject to an external pressure of 1.695E7 pascals (24,600 pounds per square inch absolute).

(5) Except those containing radioactive material in gaseous form, in the absence of a certificate from a transferor certifying that an individual sealed source meets the requirements of subsection (1) of this section, the sealed source shall not be put into use until these determinations and testings have been performed and acceptable documented results obtained.

(6) Certification documents shall be maintained for inspection by the department for a period of three years after source disposal. If a source is abandoned downhole, the certification documents shall be maintained until the department authorizes disposition.

(7) The requirements in this section do not apply to energy compensation sources (ECS). ECSs must be registered with the commission under Section 10 CFR 32.210 or with an agreement state.

[Statutory Authority: RCW 70.98.050. 03-12-062, § 246-244-110, filed 6/2/03, effective 7/3/03. Statutory Authority: RCW 43.70.040. 91-02-049 (Order 121), recodified as § 246-244-110, filed 12/27/90, effective 1/31/91. Statutory Authority: RCW 70.98.080. 87-01-031 (Order 2450), § 402-38-200, filed 12/11/86.]

WAC 246-244-115 Energy compensation sources and tritium neutron generator target sources. (1) The licensee may use an energy compensation source (ECS) which is contained within a logging tool, or other tool components,

only if the ECS contains quantities of licensed material not exceeding 3.7 MBq (100 microcuries).

(a) For well-logging applications with a surface casing for protecting fresh water aquifers, use of the ECS is only subject to the requirements of WAC 246-244-080, 246-244-090 and 246-244-100.

(b) For well-logging applications without a surface casing for protecting fresh water aquifers, use of the ECS is only subject to the requirements of WAC 246-244-030, 246-244-080, 246-244-090, 246-244-100 and 246-244-240.

(2) Use of a tritium neutron generator target source, containing quantities not exceeding 1,110 MBq (30 curies) and in a well with a surface casing to protect fresh water aquifers, is subject to the requirements of this chapter except WAC 246-244-030, 246-244-110, and 246-244-240.

(3) Use of a tritium neutron generator target source, containing quantities exceeding 1,110 MBq (30 curies) or in a well without a surface casing to protect fresh water aquifers, is subject to the requirements of this chapter except WAC 246-244-110.

[Statutory Authority: RCW 70.98.050. 03-12-062, § 246-244-115, filed 6/2/03, effective 7/3/03.]

WAC 246-244-120 Labeling. (1) Each source, source holder, and logging tool containing radioactive material shall bear a durable, legible, and clearly visible marking or label which has, at a minimum, the standard radiation caution symbol, with or without the conventional color requirement, and the following wording: "DANGER (or CAUTION) RADIOACTIVE MATERIAL." This labeling shall be on the smallest component transported as a separate piece of equipment.

(2) Each transport container shall have permanently attached to it a durable, legible, and clearly visible label which has, at a minimum, the standard radiation caution symbol and colors and the following wording: "DANGER (or CAUTION) RADIOACTIVE MATERIAL, NOTIFY CIVIL AUTHORITIES IF FOUND."

(3) The licensee may not use a uranium sinker bar in well-logging operations after December 31, 1987, unless it is clearly and legibly impressed with the words "CAUTION-RADIOACTIVE DEPLETED URANIUM" and "NOTIFY CIVIL AUTHORITIES IF FOUND."

[Statutory Authority: RCW 43.70.040. 91-02-049 (Order 121), recodified as § 246-244-120, filed 12/27/90, effective 1/31/91. Statutory Authority: RCW 70.98.080. 87-01-031 (Order 2450), § 402-38-220, filed 12/11/86.]

WAC 246-244-130 Inspection and maintenance. (1) Each licensee shall conduct a program of visual inspection and maintenance of source holders, logging tools, source handling tools, storage containers, transport containers, injection tools, and sinker bars to ensure that the required labeling is legible and that visual physical damage is absent. The licensee shall perform the visual inspection and maintenance at least every three months. Such inspection and maintenance shall follow the manufacturers recommendations for the equipment involved. Licensees shall maintain records of inspections and maintenance for three years for inspection by the department.

(2) Each licensee shall maintain appropriate copies of manufacturer's operating and maintenance instructions at those locations where such inspection and maintenance is performed.

(3) Each licensee shall inspect the source holders, logging tools, and source handling tools for obvious defects before the equipment is used each day to ensure that the equipment is in good working condition.

(4) If any inspection conducted pursuant to this section reveals damage to the labeling or to components critical for radiation safety, the licensee shall remove the item from service until authorized repairs are made.

(5) Removal of a sealed source from a source holder, and maintenance on sealed sources, holders, or pressure housings in which sealed sources are placed, or on other equipment containing a sealed source may not be performed unless a written instruction for the particular operation in question has been approved by the department as part of the license application.

(6) If a sealed source is stuck in a source holder or logging tool, the licensee may not perform any operations such as drilling, cutting, or chiseling on the source holder or logging tool, unless it is specifically licensed by the department to perform this operation.

(7) The repair, opening, or modification of any sealed source must be performed only by persons specifically licensed to do so by the department, the United States Nuclear Regulatory Commission, an agreement state, or a licensing state.

[Statutory Authority: RCW 43.70.040. 91-02-049 (Order 121), recodified as § 246-244-130, filed 12/27/90, effective 1/31/91. Statutory Authority: RCW 70.98.080. 87-01-031 (Order 2450), § 402-38-240, filed 12/11/86.]

WAC 246-244-140 Training requirements. (1) The licensee may not permit an individual to act as a logging supervisor until that person:

(a) Has completed at least forty hours of formal training in a course recognized by the department, the United States Nuclear Regulatory Commission, an agreement state, or a licensing state covering the subjects outlined in subsection (5) of this section;

(b) Has received copies of and instruction in:

(i) Washington state regulations contained in this chapter and in the applicable chapters 246-220, 246-221, and 246-222 WAC or their equivalent;

(ii) The license under which the logging supervisor will perform well-logging operations; and

(iii) The licensee's operating, recordkeeping, and emergency procedures.

(c) Has completed three months of on-the-job training and demonstrated competence in the use of licensed materials, remote handling tools, and radiation survey instruments by a field evaluation; and

(d) Has demonstrated understanding of the requirements in (a) and (b) of this subsection by successfully completing a closed book written test.

(2) The licensee may not permit an individual to act as a logging assistant until that person:

(a) Has received copies of and instruction in the licensee's operating and emergency procedures;

(b) Has demonstrated understanding of the materials listed in subsection (1)(a) and (b) of this section by successfully completing a closed book written test; and

(c) Has received instructions in the use, under the personal supervision of the logging supervisor, of tracer material, sealed sources, remote handling tools, and radiation survey instruments, as appropriate.

(3) Each licensee shall provide for documented refresher training of logging supervisors and logging assistants at intervals not to exceed twelve months.

(4) Each licensee shall maintain a record of each logging supervisor's and logging assistant's training, including copies and dates of written tests for a minimum of three years following the termination of employment.

(5) Each licensee shall include the following subjects in the formal training required by this chapter:

(a) **Fundamentals of radiation safety:**

(i) Characteristics of radiation;

(ii) Units of radiation dose and quantity of radioactivity;

(iii) Hazards of exposure to radiation;

(iv) Levels of radiation from licensed material;

(v) Methods of controlling radiation dose:

(A) Working time;

(B) Working distances;

(C) Shielding;

(D) Radiation safety practices, including prevention and contamination and methods of decontamination;

(b) **Radiation detection instrumentation to be used:**

(i) Use of radiation survey instruments:

(A) Operation;

(B) Calibration;

(C) Limitations;

(ii) Survey techniques;

(iii) Use of personnel monitoring equipment;

(c) **Equipment to be used:**

(i) Handling equipment and remote handling tools;

(ii) Licensed materials;

(iii) Storage, control, and disposal of equipment and licensed material;

(iv) Operation and control of equipment and licensed materials;

(v) Maintenance of equipment;

(d) Requirements of pertinent state and federal regulations;

(e) Case histories and potential consequences of accidents in well-logging operations.

[Statutory Authority: RCW 70.98.050 and 70.98.080. 91-15-112 (Order 184), § 246-244-140, filed 7/24/91, effective 8/24/91. Statutory Authority: RCW 43.70.040. 91-02-049 (Order 121), recodified as § 246-244-140, filed 12/27/90, effective 1/31/91. Statutory Authority: RCW 70.98.080. 87-01-031 (Order 2450), § 402-38-260, filed 12/11/86.]

WAC 246-244-150 Operating and emergency procedures. The licensee's operating and emergency procedures shall include instruction in at least the following:

(1) Handling and use of sources of radiation to be employed such that no individual is likely to be exposed to radiation doses in excess of the standards established in chapter 246-221 WAC;

(2) Methods and occasions for conducting radiation surveys;

(3) Methods and occasions for locking and securing sources of radiation;

(4) Personnel monitoring and the use and care of personnel monitoring equipment;

(5) Transportation of sources of radiation to temporary job sites and field stations, including the marking, labeling, packaging, and placing of sources of radiation in vehicles, shipping papers, placarding of vehicles, and physical securing of sources of radiation to transport vehicles during transportation to prevent accidental loss, tampering, or unauthorized removal;

(6) Minimizing personnel exposure, including that from inhalation and ingestion of licensed material, during well-logging operations and in the event of an accident;

(7) Procedure for notifying proper personnel in the event of an accident;

(8) Maintenance of records;

(9) Inspection and maintenance of source holders, logging tools, source handling tools, storage containers, transport containers, and injection tools;

(10) Procedures to be followed in the event a sealed source is lodged downhole or ruptured;

(11) Procedures to be used for picking up, receiving, and opening packages containing radioactive material;

(12) The procedure and the use of tools for remote handling of sealed sources and radioactive tracer material, except low activity calibration sources;

(13) The procedure to use for detecting contamination and for preventing the spread of contamination; and

(14) The procedure to be used to decontaminate the environment, equipment, and/or personnel if any or all are contaminated.

[Statutory Authority: RCW 70.98.050 and 70.98.080. 91-15-112 (Order 184), § 246-244-150, filed 7/24/91, effective 8/24/91. Statutory Authority: RCW 43.70.040. 91-02-049 (Order 121), recodified as § 246-244-150, filed 12/27/90, effective 1/31/91. Statutory Authority: RCW 70.98.080. 87-01-031 (Order 2450), § 402-38-280, filed 12/11/86.]

WAC 246-244-160 Personnel monitoring. (1) The licensee may not permit an individual to act as a logging supervisor or logging assistant unless that person wears, at all times during the handling of licensed radioactive materials, a personnel dosimeter that is processed by an accredited National Voluntary Laboratory Accreditation Program (NVLAP) processor. Each personnel dosimeter must be assigned to and worn by only one individual. The film badge must be exchanged and analyzed at least monthly and other personnel dosimeters exchanged and analyzed at least every three months. The licensee shall have each personnel dosimeter processed in a timely fashion.

(2) The licensee shall provide appropriate bioassay services to individuals using licensed materials for subsurface tracer studies.

(3) The licensee shall keep reports received from the accredited NVLAP personnel dosimeter processor and from the bioassay service laboratory for inspection until the department authorizes disposition or terminates the license.

(4) Personnel monitoring devices and equipment shall monitor for beta, gamma, and neutron radiation as appropriate.

(5) Each licensee shall adhere to the requirements of the department's Regulatory Guide 8.20 *Bioassay Program Criteria for I-125 and I-131.*

[Statutory Authority: RCW 70.98.050. 03-12-062, § 246-244-160, filed 6/2/03, effective 7/3/03. Statutory Authority: RCW 70.98.050 and 70.98.-080. 91-15-112 (Order 184), § 246-244-160, filed 7/24/91, effective 8/24/91. Statutory Authority: RCW 43.70.040. 91-02-049 (Order 121), recodified as § 246-244-160, filed 12/27/90, effective 1/31/91. Statutory Authority: RCW 70.98.080. 87-01-031 (Order 2450), § 402-38-300, filed 12/11/86.]

WAC 246-244-170 Radioactive contamination control. (1) During efforts to recover a sealed source lodged in the well, the licensee shall continuously monitor, with an appropriate radiation detection instrument, the circulating fluids from the well to check for contamination resulting from damage to the sealed source.

(2) If the licensee detects evidence that the sealed source has ruptured or licensed materials have caused contamination, it shall initiate required emergency procedures.

(3) If contamination results from the use of licensed material in well-logging operations, the licensee shall decontaminate all work areas, equipment, and unrestricted areas to levels deemed appropriate by the department.

[Statutory Authority: RCW 43.70.040. 91-02-049 (Order 121), recodified as § 246-244-170, filed 12/27/90, effective 1/31/91. Statutory Authority: RCW 70.98.080. 87-01-031 (Order 2450), § 402-38-320, filed 12/11/86.]

WAC 246-244-180 Security. During each logging or tracer application, the logging supervisor or other designated employee shall maintain direct surveillance of the operation to protect against unauthorized and/or unnecessary entry into the restricted area (as defined in WAC 246-220-010).

[Statutory Authority: RCW 70.98.050 and 70.98.080. 91-15-112 (Order 184), § 246-244-180, filed 7/24/91, effective 8/24/91. Statutory Authority: RCW 43.70.040. 91-02-049 (Order 121), recodified as § 246-244-180, filed 12/27/90, effective 1/31/91. Statutory Authority: RCW 70.98.080. 87-01-031 (Order 2450), § 402-38-340, filed 12/11/86.]

WAC 246-244-190 Handling tools. The licensee shall provide and require the use of tools that will assure remote handling of sealed sources other than low activity calibration sources.

[Statutory Authority: RCW 43.70.040. 91-02-049 (Order 121), recodified as § 246-244-190, filed 12/27/90, effective 1/31/91. Statutory Authority: RCW 70.98.080. 87-01-031 (Order 2450), § 402-38-360, filed 12/11/86.]

WAC 246-244-200 Subsurface tracer studies. (1) Protective gloves and other appropriate protective clothing and equipment shall be used by all personnel handling radioactive tracer material. Adequate precautions shall be taken to avoid ingestion or inhalation of radioactive material, and to avoid contamination of field site stations and temporary job sites.

(2) No licensee shall cause the injection or administration of radioactive material into fresh water aquifers without prior written authorization from the department and any other appropriate state agency.

[Statutory Authority: RCW 43.70.040. 91-02-049 (Order 121), recodified as § 246-244-200, filed 12/27/90, effective 1/31/91. Statutory Authority: RCW 70.98.080. 87-01-031 (Order 2450), § 402-38-380, filed 12/11/86.]

WAC 246-244-210 Radiation surveys. (1) Radiation surveys shall be made and recorded for each area where radioactive materials are stored at intervals not to exceed six months. In those cases where neutron sources are involved, calculations for dose rate may be substituted for direct measurement.

(2) Radiation surveys shall be made and recorded for the radiation levels in occupied positions and on the exterior of each vehicle used to transport radioactive material. Such surveys shall include each and every source of radiation or combination of sources to be transported in the vehicle. In those cases where neutron sources are involved, calculations for dose rate may be substituted for direct measurement.

(3) After removal of the sealed source from the logging tool and before departing the job site, the logging tool detector shall be energized and/or a survey meter used to assure that the logging tool and all related equipment are free of contamination.

(4) Radiation surveys shall be made and recorded at the job site or well head for each tracer operation, except those using Hydrogen-3, Carbon-14, or Sulfur-35. Such surveys shall include measurements of radiation levels immediately before and after each operation.

(5) If the licensee suspects that, as a result of operations involving a sealed source, the encapsulation of the sealed source could have been damaged by the operation, it shall conduct a radiation survey, including a contamination survey, during and after the operation.

(6) The licensee shall make a radiation survey at the temporary job site for each subsurface tracer study. The survey must include measurement of radiation levels before and after the operation, and measurement of contamination levels after the subsurface tracer study.

(7) Records of surveys required pursuant to this section shall include the dates, the identification of individuals making the survey, the identification of survey instruments used including make, model, serial number and calibration date, and an exact description of the location of the survey with diagram. Records of these surveys shall be maintained for inspection by the department for at least two years after completion of the survey.

[Statutory Authority: RCW 43.70.040. 91-02-049 (Order 121), recodified as § 246-244-210, filed 12/27/90, effective 1/31/91. Statutory Authority: RCW 70.98.080. 87-01-031 (Order 2450), § 402-38-400, filed 12/11/86.]

WAC 246-244-220 Documents and records required at field stations. Each licensee shall maintain for inspection by the department the following documents and records for the specific devices and sources at the field station:

(1) Appropriate license or equivalent documents;

(2) Operating and emergency procedures;

(3) Applicable regulations;

(4) Records of the latest survey instrument calibrations required pursuant to WAC 246-244-070;

(5) Records of the latest leak test results required pursuant to WAC 246-244-080;

(6) Records of inventories required pursuant to WAC 246-244-090;

(7) Utilization records required pursuant to WAC 246-244-100;

(8) Records of inspection and maintenance required pursuant to WAC 246-244-130;

(9) Survey records required pursuant to WAC 246-244-210; and

(10) Training records required pursuant to WAC 246-244-140.

[Statutory Authority: RCW 70.98.050 and 70.98.080. 91-15-112 (Order 184), § 246-244-220, filed 7/24/91, effective 8/24/91. Statutory Authority: RCW 43.70.040. 91-02-049 (Order 121), recodified as § 246-244-220, filed 12/27/90, effective 1/31/91. Statutory Authority: RCW 70.98.080. 87-01-031 (Order 2450), § 402-38-420, filed 12/11/86.]

WAC 246-244-230 Documents and records required at temporary job sites. Each licensee conducting operations at a temporary job site shall have the following documents and records available at all times at that site for inspection by the department:

(1) Current operating and emergency procedure(s);

(2) Survey records required pursuant to WAC 246-244-210 for the period of operation at the site;

(3) Actual current calibration certificates (or photocopies) for the radiation survey instruments used at the site;

(4) When operating in the state of Washington under reciprocity, a copy of the appropriate license, and the Washington state rules and regulations for radiation protection;

(5) Records of current leak tests for all sealed sources which require such tests at the job site;

(6) Use logs required pursuant to WAC 246-244-100;

(7) Current United States Department of Transportation shipping papers and transport container certifications for the material transported; and

(8) Records of spotmarker inventories made prior to arrival required pursuant to WAC 246-244-090.

[Statutory Authority: RCW 70.98.050 and 70.98.080. 91-15-112 (Order 184), § 246-244-230, filed 7/24/91, effective 8/24/91. Statutory Authority: RCW 43.70.040. 91-02-049 (Order 121), recodified as § 246-244-230, filed 12/27/90, effective 1/31/91. Statutory Authority: RCW 70.98.080. 87-01-031 (Order 2450), § 402-38-440, filed 12/11/86.]

WAC 246-244-240 Notification of incidents, abandonment, and lost sources. (1) Notification of incidents and sources lost in other than downhole logging operations shall be made in accordance with appropriate provisions of chapter 246-221 WAC.

(2) The licensee shall immediately notify the state of Washington division of radiation protection by telephone (206-682-5327) and subsequently within five days by confirmatory letter if:

(a) Licensed material has been lost in or near a fresh water aquifer; or

(b) A sealed source has been ruptured. This notice must designate the well or other location and describe the magnitude and extent of licensed materials, assess the consequences of the loss or rupture, and explain efforts planned or being taken to mitigate these consequences.

(3) Whenever a sealed source or device containing radioactive material is lodged downhole, the licensee shall:

(a) Monitor the surface for the presence of radioactive contamination with an appropriate radiation survey instrument (not the logging tool itself) during logging tool recovery operations; and

(b) Notify the department immediately by telephone (206-682-5327) if radioactive contamination is detected at the surface or if the source appears to be damaged.

(4) When it becomes apparent that efforts to recover the radioactive source will not be successful, the licensee shall:

(a) Notify the department by telephone (206-682-5327) of the circumstances that resulted in the inability to retrieve the source and—

(i) Obtain department approval to implement abandonment procedures; or

(ii) That the licensee implemented abandonment before receiving department approval because the licensee believed there was an immediate threat to public health and safety; and

(b) Advise the well operator or owner, as appropriate, of the regulations of the state of Washington regarding abandonment, and an appropriate method of abandonment. The licensee shall ensure that such abandonment procedures are implemented within thirty days after the sealed source has been classified as irretrievable or request an extension of time if unable to complete the abandonment procedures; and

(c) File a written report with the department within thirty days of the abandonment, including a copy to each appropriate state or federal agency that issued permits or otherwise approved of the drilling operation, setting forth the following information:

(i) Date and time of occurrence and a brief description of attempts to recover the source;

(ii) A description of the radioactive source(s) involved, including radionuclide, quantity, make, model and serial number, and chemical and physical form;

(iii) Surface location and identification of well;

(iv) Results of efforts to immobilize and seal the source in place;

(v) Depth of the radioactive source in meters or feet;

(vi) Depth to the top of cement plug in meters or feet;

(vii) Depth of the well in meters or feet;

(viii) The immediate threat to public health and safety justification for implementing abandonment if prior departmental approval was not obtained in accordance with subsection (4)(a)(ii) of this section;

(ix) Any other information, such as a warning statement, contained on the permanent identification plaque; and

(x) State and federal agencies receiving a copy of this report.

[Statutory Authority: RCW 70.98.050. 03-12-062, § 246-244-240, filed 6/2/03, effective 7/3/03; 98-13-037, § 246-244-240, filed 6/8/98, effective 7/9/98. Statutory Authority: RCW 70.98.050 and 70.98.080. 91-15-112 (Order 184), § 246-244-240, filed 7/24/91, effective 8/24/91. Statutory Authority: RCW 43.70.040. 91-02-049 (Order 121), recodified as § 246-244-240, filed 12/27/90, effective 1/31/91. Statutory Authority: RCW 70.98.080. 87-01-031 (Order 2450), § 402-38-500, filed 12/11/86.]

Chapter 246-246 WAC

RADIOACTIVE CRITERIA FOR LICENSE TERMINATION

WAC

246-246-001	General provisions and scope.
246-246-010	Definitions.
246-246-020	Radiological criteria for unrestricted use.
246-246-030	Criteria for license termination under restricted conditions.
246-246-040	Alternate criteria for license termination.
246-246-050	Public notification and public participation.
246-246-060	Minimization of contamination.

WAC 246-246-001 General provisions and scope. (1) The criteria in this chapter apply to the decommissioning of all facilities licensed or registered under these regulations.

For low-level waste disposal facilities (chapter 246-250 WAC), the criteria apply only to ancillary surface facilities that support radioactive waste disposal activities. The criteria do not apply to uranium and thorium recovery facilities already subject to chapter 246-252 WAC or to uranium solution extraction facilities.

(2) The criteria in this chapter do not apply to sites which:

(a) Have been decommissioned following department approved procedures prior to the effective date of this rule; and

(b) Have previously submitted and received department approval on a license termination plan (LTP) or decommissioning plan.

(3) After a site has been decommissioned and the license terminated in accordance with the criteria in this chapter, the department will require additional cleanup only if, based on new information, it determines that the criteria of this chapter were not met and residual radioactivity remaining at the site could result in significant threat to public health and safety.

(4) When calculating total effective dose equivalent (TEDE) to the average member of the critical group the licensee shall determine the peak annual TEDE dose expected within the first one thousand years after decommissioning.

(5) The provisions of this chapter do not relieve licensees of meeting all other applicable state and federal laws and rules.

[Statutory Authority: RCW 70.98.050. 01-14-045, § 246-246-001, filed 6/29/01, effective 7/30/01; 00-07-085, § 246-246-001, filed 3/15/00, effective 4/15/00.]

WAC 246-246-010 Definitions. As used in this chapter, the following definitions apply:

(1) "Critical group" means the group of individuals reasonably expected to receive the greatest exposure to residual radioactivity for any applicable set of circumstances.

(2) "Decommission" means to remove a facility or site safely from service and reduce residual radioactivity to a level that permits:

(a) Release of the property for unrestricted use and termination of the license; or

(b) Release of the property under restricted conditions and termination of the license.

(3) "Distinguishable from background" means that the detectable concentration of a radionuclide is statistically different from the background concentration of that radionuclide in the vicinity of the site or, in the case of structures, in similar materials using adequate measurement technology, survey, and statistical techniques.

(4) "Residual radioactivity" means radioactivity in structures, materials, soils, ground water, and other media at a site resulting from activities under the licensee's control. This includes radioactivity from all licensed and unlicensed sources used by the licensee, but excludes background radiation. It also includes radioactive materials remaining at the site as a result of routine or accidental releases of radioactive material at the site and previous burials at the site, even if those burials were made in accordance with the provisions of chapter 246-221 WAC.

[Statutory Authority: RCW 70.98.050. 00-07-085, § 246-246-010, filed 3/15/00, effective 4/15/00.]

WAC 246-246-020 Radiological criteria for unrestricted use. The department will determine a site is acceptable for unrestricted use if:

(1) The residual radioactivity that is distinguishable from background radiation results in a TEDE to an average member of the critical group that does not exceed 0.25 mSv (25 mrem) per year, including that from ground water sources of drinking water; and

(2) The residual radioactivity has been reduced to levels that are as low as reasonably achievable (ALARA). Determination of the levels which are ALARA must take into account consideration of any detriments, such as deaths from transportation accidents, expected to potentially result from decontamination and waste disposal.

[Statutory Authority: RCW 70.98.050. 00-07-085, § 246-246-020, filed 3/15/00, effective 4/15/00.]

WAC 246-246-030 Criteria for license termination under restricted conditions. A site is acceptable for license termination under restricted conditions if:

(1) The licensee can demonstrate that further reductions in residual radioactivity necessary to comply with the provisions of WAC 246-246-020 would result in net public or environmental harm or were not being made because the residual levels associated with restricted conditions are ALARA. Determination of the levels which are ALARA must take into account consideration of any detriments, such as traffic accidents, expected to potentially result from decontamination and waste disposal;

(2) The licensee has made provisions for legally enforceable institutional controls that provide reasonable assurance that the TEDE from residual radioactivity distinguishable from background to the average member of the critical group will not exceed 0.25 mSv (25 mrem) per year;

(3) The licensee has provided sufficient financial assurance to enable an independent third party, including a governmental custodian of a site, to assume and carry out responsibilities for any necessary control and maintenance of the site. Acceptable financial assurance mechanisms are those described in WAC 246-235-075 (4)(a), (b), and (d) and, when a governmental entity is assuming custody and ownership of a site, an arrangement that is deemed acceptable by such governmental entity;

(4) The licensee has submitted a decommissioning plan or license termination plan (LTP) to the department indicating the licensee's intent to decommission in accordance with WAC 246-232-060(6), and specifying that the licensee intends to decommission by restricting use of the site. The licensee shall document in the LTP or decommissioning plan how the advice of individuals and institutions in the community who may be affected by the decommissioning has been sought and incorporated, as appropriate, following analysis of that advice;

(a) Licensees proposing to decommission by restricting use of the site shall seek advice from the affected parties regarding the following matters concerning the proposed decommissioning:

(i) Whether provisions for institutional controls proposed by the licensee:

(A) Will provide reasonable assurance that the TEDE from residual radioactivity distinguishable from background

to the average member of the critical group will not exceed 0.25 mSv (25 mrem) TEDE per year;

(B) Will be enforceable; and

(C) Will not impose undue burdens on the local community or other affected parties;

(ii) Whether the licensee has provided sufficient financial assurance to enable an independent third party, including a governmental custodian of a site, to assume and carry out responsibilities for any necessary control and maintenance of the site;

(b) In seeking advice on the issues identified in WAC 246-246-030 (4)(a), the licensee shall provide for:

(i) Participation by representatives of a broad cross section of community interests who may be affected by the decommissioning;

(ii) An opportunity for a comprehensive, collective discussion on the issues by the participants represented; and

(iii) A publicly available summary of the results of all discussions, including a description of the individual viewpoints of the participants on the issues and the extent of agreement and disagreement among the participants on the issues; and

(5) Residual radioactivity at the site has been reduced so that if the institutional controls were no longer in effect, there is reasonable assurance that the TEDE from residual radioactivity distinguishable from background to the average member of the critical group is as low as reasonably achievable and would not exceed either:

(a) 1 mSv (100 mrem) per year; or

(b) 5 mSv (500 mrem) per year provided the licensee:

(i) Demonstrates that further reductions in residual radioactivity necessary to comply with the 1 mSv/y (100 mrem/y) value of (a) of this subsection are not technically achievable, would be prohibitively expensive, or would result in net public or environmental harm;

(ii) Makes provisions for durable institutional controls;

(iii) Provides sufficient financial assurance to enable a responsible government entity or independent third party, including a governmental custodian of a site, both to carry out periodic rechecks of the site no less frequently than every five years to assure that the institutional controls remain in place as necessary to meet the criteria of WAC 246-246-030(2) and to assume and carry out responsibilities for any necessary control and maintenance of those controls. Acceptable financial assurance mechanisms are those in WAC 246-235-075 (4)(a), (b), and (d).

[Statutory Authority: RCW 70.98.050. 00-07-085, § 246-246-030, filed 3/15/00, effective 4/15/00.]

WAC 246-246-040 Alternate criteria for license termination. (1) The department may terminate a license using alternate criteria greater than the dose criterion of WAC 246-246-020, 246-246-030(2), and 246-246-030 (4)(a)(i)(A), if the licensee:

(a) Provides assurance that public health and safety would continue to be protected, and that it is unlikely that the dose from all man-made sources combined, other than medical, would be more than the 1 mSv/y (100 mrem/y) limit of WAC 246-221-060, by submitting an analysis of possible sources of exposure;

(b) Has employed to the extent practical restrictions on site use according to the provisions of WAC 246-246-030 in minimizing exposures at the site; and

(c) Reduces doses to ALARA levels, taking into consideration any detriments such as traffic accidents expected to potentially result from decontamination and waste disposal;

(d) Has submitted a decommissioning plan or license termination plan (LTP) to the department indicating the licensee's intent to decommission in accordance with WAC 246-232-060(6), and specifying that the licensee proposes to decommission by use of alternate criteria. The licensee shall document in the decommissioning plan or LTP how the advice of individuals and institutions in the community who may be affected by the decommissioning has been sought and addressed, as appropriate, following analysis of that advice. In seeking advice, the licensee shall provide:

(i) Participation by representatives of a broad cross section of community interests who may be affected by the decommissioning;

(ii) An opportunity for a comprehensive, collective discussion on the issues by the participants represented; and

(iii) A publicly available summary of the results of all such discussions, including a description of the individual viewpoints of the participants on the issues and the extent of agreement and disagreement among the participants on the issues;

(2) The use of alternate criteria to terminate a license requires the approval of the department after consideration of the department staff's recommendations that will address any comments provided by the environmental protection agency and any public comments submitted pursuant to WAC 246-246-050.

[Statutory Authority: RCW 70.98.050. 00-07-085, § 246-246-040, filed 3/15/00, effective 4/15/00.]

WAC 246-246-050 Public notification and public participation. Upon the receipt of an LTP or decommissioning plan from the licensee, or a proposal by the licensee for release of a site under WAC 246-246-030 or 246-246-040, or whenever the department deems such notice to be in the public interest, the department shall:

(1) Notify and solicit comments from:

(a) Local and other applicable state agencies in the vicinity of the site and any Indian Nation or other indigenous people that have treaty or statutory rights that could be affected by the decommissioning; and

(b) The environmental protection agency for cases where the licensee proposes to release a site pursuant to WAC 246-246-040.

(2) Publish a notice in the Washington State Register and in a forum, such as local newspapers, letters to state or local organizations, or other appropriate forum, that is readily accessible to individuals in the vicinity of the site, and solicit comments from affected parties.

[Statutory Authority: RCW 70.98.050. 00-07-085, § 246-246-050, filed 3/15/00, effective 4/15/00.]

WAC 246-246-060 Minimization of contamination. Applicants for licenses, other than renewals, after the effective date of this rule, shall describe in the application how facility design and procedures for operation will minimize, to

the extent practicable, contamination of the facility and the environment, facilitate eventual decommissioning, and minimize, to the extent practicable, the generation of radioactive waste.

[Statutory Authority: RCW 70.98.050. 00-07-085, § 246-246-060, filed 3/15/00, effective 4/15/00.]

Chapter 246-247 WAC
RADIATION PROTECTION—AIR EMISSIONS

WAC

246-247-001	Purpose.
246-247-002	Authority.
246-247-010	Applicability.
246-247-020	Exemptions.
246-247-030	Definitions.
246-247-035	National standards adopted by reference for sources of radionuclide emissions.
246-247-040	General standards.
246-247-045	Where to find technical references.
246-247-060	Applications, registration and licensing.
246-247-065	Fees.
246-247-075	Monitoring, testing and quality assurance.
246-247-080	Inspections, reporting, and recordkeeping.
246-247-085	Compliance determination for existing emission units and facilities.
246-247-100	Enforcement actions.
246-247-110	Appendix A—Application information requirements.
246-247-120	Appendix B—BARCT compliance demonstration.
246-247-130	Appendix C—ALARACT compliance demonstration.

DISPOSITION OF SECTIONS FORMERLY CODIFIED IN THIS CHAPTER

246-247-050	Registration. [Statutory Authority: RCW 43.70.040. 91-02-049 (Order 121), recodified as § 246-247-050, filed 12/27/90, effective 1/31/91. Statutory Authority: Chapter 70.98 RCW. 88-17-060 (Order 2671), § 402-80-060, filed 8/17/88. Statutory Authority: RCW 70.98.080. 87-01-031 (Order 2450), § 402-80-060, filed 12/11/86.] Repealed by 94-07-010, filed 3/4/94, effective 4/4/94. Statutory Authority: Chapters 70.98 and 70.94 RCW and chapter 173-480 WAC.
246-247-070	New and modified sources. [Statutory Authority: RCW 43.70.040. 91-02-049 (Order 121), recodified as § 246-247-070, filed 12/27/90, effective 1/31/91. Statutory Authority: RCW 70.98.080. 87-01-031 (Order 2450), § 402-80-070, filed 12/11/86.] Repealed by 94-07-010, filed 3/4/94, effective 4/4/94. Statutory Authority: Chapters 70.98 and 70.94 RCW and chapter 173-480 WAC.
246-247-090	Special reports. [Statutory Authority: RCW 43.70.040. 91-02-049 (Order 121), recodified as § 246-247-090, filed 12/27/90, effective 1/31/91. Statutory Authority: RCW 70.98.080. 87-01-031 (Order 2450), § 402-80-090, filed 12/11/86.] Repealed by 94-07-010, filed 3/4/94, effective 4/4/94. Statutory Authority: Chapters 70.98 and 70.94 RCW and chapter 173-480 WAC.

WAC 246-247-001 Purpose. The purpose of this chapter is to establish application requirements and procedures for the issuance of a radioactive air emissions license and for the regulation of those emissions by the department of health (hereinafter referred to as "the department") to assure compliance with the standards for radioactive air emissions set by the department of ecology pursuant to RCW 70.94.331, promulgated in chapter 173-480 WAC, and with the rules and regulations of this chapter.

[Statutory Authority: Chapters 70.98 and 70.94 RCW and chapter 173-480 WAC. 94-07-010, § 246-247-001, filed 3/4/94, effective 4/4/94. Statutory Authority: RCW 43.70.040. 91-02-049 (Order 121), recodified as § 246-247-001, filed 12/27/90, effective 1/31/91. Statutory Authority: RCW 70.98.080. 87-01-031 (Order 2450), § 402-80-010, filed 12/11/86.]

WAC 246-247-002 Authority. (1) Rules and regulations set forth herein are adopted and enforced by the department pursuant to the provisions of chapter 70.98 RCW which:

(a) Designate the department as the state's radiation control agency having sole responsibility for the administration of the regulatory, licensing, and radiation control provisions of chapter 70.98 RCW;

(b) Vest in the department the authority to formulate, adopt, promulgate, and repeal codes, rules, and regulations related to the control of sources of ionizing radiation;

(c) Authorize the department to implement an independent statewide program to monitor radioactive air emissions from sources within the state;

(d) Authorize the department to conduct inspections of facilities, both private and public, to determine whether or not there is compliance with or violation of the provisions of chapter 70.98 RCW and rules and regulations issued thereunder; and

(e) Authorize the department to require registration of sources of ionizing radiation.

(2) In addition, RCW 70.94.422 (Washington Clean Air Act) grants to the department the enforcement powers contained in that chapter.

[Statutory Authority: Chapters 70.98 and 70.94 RCW and chapter 173-480 WAC. 94-07-010, § 246-247-002, filed 3/4/94, effective 4/4/94.]

WAC 246-247-010 Applicability. (1) The standards and requirements of this chapter apply statewide at the following types of facilities that emit radionuclides to the air:

(a) Facilities licensed by the department or by the United States Nuclear Regulatory Commission (NRC);

(b) United States Department of Energy (DOE) facilities;

(c) Non-DOE federal facilities;

(d) Uranium fuel cycle facilities;

(e) Uranium mills that are processing material; and

(f) Any other facility that the department determines emits or has the potential to emit radionuclides to the ambient air.

(2) The standards and requirements of this chapter apply to point sources, nonpoint sources, and fugitive emissions.

(3) The standards and requirements of this chapter apply to stationary and mobile emission units, whether temporary or permanent.

(4) The control technology standards and requirements of this chapter apply to the abatement technology and indication devices of facilities and emission units subject to this chapter. Control technology requirements apply from entry of radionuclides into the ventilated vapor space to the point of release to the environment.

(5) In accordance with RCW 70.94.161(10), air operating permits issued under chapter 173-401 WAC shall incorporate all applicable requirements of this chapter. Therefore, all facilities listed in subsection (1) of this section that are also subject to the operating permit regulations in chapter 173-401 WAC shall be considered in compliance with the requirements of this chapter if they comply with all the applicable requirements of the air operating permit issued under chapter 173-401 WAC. These applicable requirements shall be contained in the radioactive air emissions license which

shall be incorporated as part of the air operating permit. In accordance with RCW 70.94.422(1), the department shall enforce all the requirements contained in the radioactive air emissions license.

(6) Should any of the federal regulations that have been adopted by reference in this chapter be rescinded, the affected facilities shall nonetheless comply with all other applicable requirements of this chapter.

(7) An applicant may obtain a copy of any document referenced in this chapter by contacting the department's division of radiation protection, air emissions and defense wastes section at (360) 236-3260. Mail reports, applications, and other written correspondence to the Air Emissions and Defense Wastes Section at 7171 Cleanwater Lane, Building 5, P.O. Box 47827, Olympia, Washington, 98504-7827.

[Statutory Authority: RCW 70.98.050. 04-18-094, § 246-247-010, filed 9/1/04, effective 10/2/04; 98-13-037, § 246-247-010, filed 6/8/98, effective 7/9/98. Statutory Authority: Chapters 70.98 and 70.94 RCW and chapter 173-480 WAC. 94-07-010, § 246-247-010, filed 3/4/94, effective 4/4/94. Statutory Authority: RCW 43.70.040. 91-02-049 (Order 121), recodified as § 246-247-010, filed 12/27/90, effective 1/31/91. Statutory Authority: RCW 70.98.080. 87-01-031 (Order 2450), § 402-80-020, filed 12/11/86.]

WAC 246-247-020 Exemptions. (1) The following types of facilities or sources of radiation are exempt from the requirements of this chapter because they release no airborne radioactivity, or they prima facie comply with the standards in WAC 246-247-040, or they are already adequately regulated under other requirements:

(a) Users of only sealed sources;

(b) Sealed sources;

(c) Accelerators less than 200 MeV;

(d) Nuclear-powered vessels underway or moored dockside unless under a maintenance condition with a potential-to-emit;

(e) Uranium mill tailings piles disposed of under 40 CFR Part 192.

(2) Exemption determinations.

(a) Any exemptions shall be consistent with 40 CFR 61. No exemptions from the standards in WAC 246-247-040 will be granted.

(b) A nonfederal facility may request exemption from some of the requirements of WAC 246-247-060 and 246-247-075 if the potential-to-emit, for the emission unit(s) under consideration, results in compliance at level I of the COMPLY computer code or level I of the NCRP's Commentary No. 3, or equivalent as approved by the department.

(c) A federal facility may request exemption from some of the requirements of WAC 246-247-060 and 246-247-075 if the potential-to-emit, for the emission unit(s) under consideration, results in a TEDE to the MEI from all pathways less than 0.1 mrem/yr.

(d) The facility shall submit all the data necessary to make the exemption determinations of (b) and (c) of this subsection. The department shall determine if any exemptions apply.

(e) Commercial nuclear power plants may request exemption from some of the requirements of this chapter in order to minimize dual regulation with the NRC.

(3) The department may require a facility with exempt emission units to submit a radioactive air emissions report to confirm compliance with applicable standards. The department reserves the right to conduct inspections and audits of the facility to confirm the status of its exempt emission units.

(4) Naturally occurring airborne radionuclides are exempt from the requirements of this chapter unless the concentrations or rates of emissions have been enhanced by industrial processes.

[Statutory Authority: Chapters 70.98 and 70.94 RCW and chapter 173-480 WAC. 94-07-010, § 246-247-020, filed 3/4/94, effective 4/4/94. Statutory Authority: RCW 43.70.040. 91-02-049 (Order 121), recodified as § 246-247-020, filed 12/27/90, effective 1/31/91. Statutory Authority: RCW 70.98.080. 87-01-031 (Order 2450), § 402-80-030, filed 12/11/86.]

WAC 246-247-030 Definitions. Terms used in this chapter have the definitions set forth below with reference to radioactive air emissions.

(1) "Abatement technology" means any mechanism, process or method that has the potential to reduce public exposure to radioactive air emissions. Abatement control features include automatic mechanisms and administrative controls used in the operation and control of abatement technology from entry of radionuclides into the ventilated vapor space to release to the environment.

(2) "Administrative control" means any policy or procedure that limits the emission of radionuclides.

(3) "ALARA" means as low as reasonably achievable making every reasonable effort to maintain exposures to radiation as far below the dose standards in this chapter as is practical, consistent with the purpose for which the licensed activity is undertaken, taking into account the state of technology, the economics of improvements in relation to the state of technology, the economics of improvements in relation to benefits to the public health and safety, and other socioeconomic considerations, and in relation to the utilization of nuclear energy, ionizing radiation, and radioactive materials in the public interest. See WAC 246-220-007.

(4) "As low as reasonably achievable control technology" (ALARACT) means the use of radionuclide emission control technology that achieves emission levels that are consistent with the philosophy of ALARA. ALARACT compliance is demonstrated by evaluating the existing control system and proposed nonsignificant modifications in relation to applicable technology standards and other control technologies operated successfully in similar applications. In no event shall application of ALARACT result in emissions of radionuclides that could cause exceedance of the applicable standards of WAC 246-247-040. See the definition of ALARA in this section. Note that ALARACT is equivalent to, but replaces, RACT in the May 7, 1986, version of chapter 173-480 WAC.

(5) "Annual possession quantity" means the sum of the quantity of a radionuclide on hand at the beginning of the calendar year and the quantity of that radionuclide received or produced during the calendar year.

(6) "Best available radionuclide control technology" (BARCT) means technology that will result in a radionuclide emission limitation based on the maximum degree of reduction for radionuclides from any proposed newly constructed or significantly modified emission units that the licensing authority determines is achievable on a case-by-case basis. A BARCT compliance demonstration must consider energy, environmental, and economic impacts, and other costs

through examination of production processes, and available methods, systems, and techniques for the control of radionuclide emissions. A BARCT compliance demonstration is the conclusion of an evaluative process that results in the selection of the most effective control technology from all known feasible alternatives. In no event shall application of BARCT result in emissions of radionuclides that could exceed the applicable standards of WAC 246-247-040. Control technology that meets BARCT requirements also meets ALARACT requirements. See WAC 173-480-030 and 246-247-120.

(7) "Committed effective dose equivalent" (CEDE) means the sum of the products of absorbed dose from internally deposited radionuclides and appropriate factors to account for differences in biological effectiveness due to the quality of radiation and its distribution in the body of reference man over a fifty-year period.

(8) "Construction" means fabrication, erection, or installation of a new building, structure, plant, process, or operation within a facility that has the potential to emit airborne radionuclides. Construction includes activities of a permanent nature aimed at completion of the emission unit, such as pouring concrete, putting in a foundation, or installing utilities directly related to the emission unit. It does not include preliminary activities such as tests to determine site suitability, equipment procurement and storage, site clearing and grading, and the construction of ancillary buildings.

(9) "Decommissioning" means actions taken to reduce or eliminate the potential public health and safety impacts of a building, structure, or plant that has permanently ceased operations, including, but not limited to, actions such as decontamination, demolition, and disposition.

(10) "Emission unit" means any single location that emits or has the potential to emit airborne radioactive material. This may be a point source, nonpoint source, or source of fugitive emissions.

(11) "Facility" means all buildings, structures, plants, processes, and operations on one contiguous site under control of the same owner or operator.

(12) "Fugitive emissions" are radioactive air emissions which do not and could not reasonably pass through a stack, vent, or other functionally equivalent structure, and which are not feasible to directly measure and quantify.

(13) "Indication device" means any method or apparatus used to monitor, or to enable monitoring, the operation of abatement controls or the potential or actual radioactive air emissions.

(14) "License" means a radioactive air emissions license, either issued by the department or incorporated by the department as an applicable portion of an air operating permit issued by the department of ecology or a local air pollution control authority, with requirements and limitations listed therein to which the licensed or permitted party must comply. Compliance with the license requirements shall be determined and enforced by the department.

(15) "Maximally exposed individual" (MEI) means any member of the public (real or hypothetical) who abides or resides in an unrestricted area, and may receive the highest TEDE from the emission unit(s) under consideration, taking into account all exposure pathways affected by the radioactive air emissions.

(16) "Modification" means any physical change in, or change in the method of operation of, an emission unit that could increase the amount of radioactive materials emitted or may result in the emission of any radionuclide not previously emitted. This definition includes the cleanup of land contaminated with radioactive material, the decommissioning of buildings, structures, or plants where radioactive contamination exists, and changes that will cause an increase in the emission unit's operating design capacity. This definition excludes routine maintenance, routine repair, replacement-in-kind, any increases in the production rate or hours of operation, provided the emission unit does not exceed the release quantities specified in the license application or the operating design capacity approved by the department, addition of abatement technology as long as it is not less environmentally beneficial than existing, approved controls, and changes that result in an increase in the quantity of emissions of an existing radionuclide that will be offset by an equal or greater decrease in the quantity of emissions of another radionuclide that is deemed at least as hazardous with regard to its TEDE to the MEI.

(17) "Monitoring" means the measurement of radioactive material released to the ambient air by means of an in-line radiation detector, and/or by the withdrawal of representative samples from the effluent stream. Ambient air measurements may be acceptable for nonpoint sources and fugitive emissions.

(18) "Nonpoint source" is a location at which radioactive air emissions originate from an area, such as contaminated ground above a near-surface waste disposal unit, whose extent may or may not be well-defined.

(19) "Notice of construction" (NOC) is an application submitted to the department by an applicant that contains information required by WAC 246-247-060 for proposed construction or modification of a registered emission unit(s), or for modification of an existing, unregistered emission unit(s).

(20) "Point source" is a discrete, well-defined location from which radioactive air emissions originate, such as a stack, vent, or other functionally equivalent structure.

(21) "Potential-to-emit" means the rate of release of radionuclides from an emission unit based on the actual or potential discharge of the effluent stream that would result if all abatement control equipment did not exist, but operations are otherwise normal. Determine the potential-to-emit by one of the following methods:

(a) Multiply the annual possession quantity of each radionuclide by the release fraction for that radionuclide, depending on its physical state. Use the following release fractions:

(i) 1 for gases;

(ii) 10^{-3} for liquids or particulate solids; and

(iii) 10^{-6} for solids.

Determine the physical state for each radionuclide by considering its chemical form and the highest temperature to which it is subjected. Use a release fraction of one if the radionuclide is subjected to temperatures at or above its boiling point; use a release fraction of 10^{-3} if the radionuclide is subjected to temperatures at or above its melting point, but below its boiling point. If the chemical form is not known, use a release fraction of one for any radionuclide that is heated to a temperature of one hundred degrees Celsius or more, boils at

a temperature of one hundred degrees Celsius or less, or is intentionally dispersed into the environment. Other release fractions may be used only with the department's approval; or

(b) Perform a back-calculation using measured emission rates and *in situ* measurements of the control equipment efficiencies, as approved by the department; or

(c) Measure the quantities of radionuclides captured in each control device, coupled with *in situ* measurements of the control equipment efficiencies, as approved by the department; or

(d) Sample the effluent upstream from all control devices, as approved by the department; or

(e) Use an alternative method approved by the department.

(22) "Replacement-in-kind" means the substitution of existing systems, equipment, components, or devices of an emission unit's control technology with systems, equipment, components, or devices with equivalent, or better, performance specifications that will perform the same function(s).

(23) "Routine" means:

(a) Maintenance, repair, or replacement-in-kind performed on systems, equipment, components, or devices of an emission unit's abatement technology as a planned part of an established inspection, maintenance, or quality assurance program that does not increase the emission unit's operating design capacity; or

(b) Normal, day-to-day operations of a facility.

(24) "Sealed source" means radioactive material that is permanently bonded or fixed in a capsule or matrix, or radioactive material in airtight containers, designed to prevent release and dispersal of the radioactive material under the most severe conditions encountered in normal use and handling.

(25) "Significant" means the potential-to-emit airborne radioactivity at a rate that could increase the TEDE to the MEI by at least 1.0 mrem/yr as a result of a proposed modification.

(26) "Total effective dose equivalent" (TEDE) means the sum of the dose equivalent due to external exposures and the CEDE due to internal exposures.

(27) "Uranium fuel cycle" means the operations of milling uranium ore, chemical conversion of uranium, isotopic enrichment of uranium, fabrication of uranium fuel, generation of electricity in a nuclear power plant that uses uranium fuel, and reprocessing of spent uranium fuel, to the extent that these operations solely support the production of electrical power for public use. Excluded are mining operations, waste disposal sites, transportation of any radioactive material, and the reuse of recovered nonuranium special nuclear and by-product materials from the cycle.

[Statutory Authority: Chapters 70.98 and 70.94 RCW and chapter 173-480 WAC. 94-07-010, § 246-247-030, filed 3/4/94, effective 4/4/94. Statutory Authority: RCW 43.70.040. 91-02-049 (Order 121), recodified as § 246-247-030, filed 12/27/90, effective 1/31/91. Statutory Authority: Chapter 70.98 RCW. 88-17-060 (Order 2671), § 402-80-040, filed 8/17/88. Statutory Authority: RCW 70.98.080. 87-01-031 (Order 2450), § 402-80-040, filed 12/11/86.]

WAC 246-247-035 National standards adopted by reference for sources of radionuclide emissions. (1) The following federal standards, as in effect on July 1, 2004, are adopted by reference except as provided in subsections (2) and (3) of this section.

These standards apply in addition to other requirements of this chapter.

(a) For federal facilities:

(i) 40 CFR Part 61, Subpart A - General Provisions.

(ii) 40 CFR Part 61, Subpart H - National Emission Standards for Emissions of Radionuclides Other Than Radon From Department of Energy Facilities.

(iii) 40 CFR Part 61, Subpart I - National Emission Standards for Radionuclide Emissions From Federal Facilities Other Than Nuclear Regulatory Commission Licensees and Not Covered by Subpart H.

(iv) 40 CFR Part 61, Subpart Q - National Emission Standards for Radon Emissions From Department of Energy Facilities.

(b) For nonfederal facilities:

(i) 40 CFR Part 61, Subpart A - General Provisions.

(ii) 40 CFR Part 61, Subpart B - National Emission Standards for Radon Emissions From Underground Uranium Mines.

(iii) 40 CFR Part 61, Subpart K - National Emission Standards for Radionuclide Emissions From Elemental Phosphorus Plants.

(iv) 40 CFR Part 61, Subpart R - National Emissions Standards for Radon from Phosphogypsum Stacks.

(v) 40 CFR Part 61, Subpart T - National Emission Standards for Radon Emissions From the Disposal of Uranium Mill Tailings.

(vi) 40 CFR Part 61, Subpart W - National Emission Standards for Radon Emissions From Operating Mill Tailings.

(2) References to "Administrator" or "EPA" in 40 CFR Part 61 include the department of health except in any section of 40 CFR Part 61 for which a federal rule or delegation indicates that the authority will not be delegated to the state.

(3) Any change or alternative to standards, emission monitoring and test procedures, compliance and reporting requirements, or recordkeeping requirements must be approved by EPA.

[Statutory Authority: RCW 70.98.050. 05-12-059, § 246-247-035, filed 5/26/05, effective 6/26/05.]

WAC 246-247-040 General standards. (1) Standards for radioactive air emissions in the state of Washington are contained in WAC 173-480-040, 173-480-050, and 173-480-060. Additional standards for emissions of radionuclides other than radon from United States Department of Energy facilities and for radionuclide emissions from federal facilities other than United States Nuclear Regulatory Commission (NRC) licensees are contained in 40 CFR Part 61, subparts H and I (as effective on October 9, 2002). Additional standards for NRC licensees are contained in 10 CFR 20.1101 (as effective on January 9, 1997). In accordance with WAC 173-480-050(3), the department shall enforce the most stringent standard in effect, notwithstanding any agreement between EPA and any other agency, including those agreements made pursuant to 42 USC 7412(d)(9).

(2) In addition to the radioactive air emission standards of subsection (1) of this section, the department's radioactive

materials licensees shall comply with the limitations on radioactive air emissions contained in WAC 246-221-070.

(3) All new construction and significant modifications of emission units commenced after August 10, 1988 (the date this chapter originally became effective) shall utilize BARCT (see Appendix B).

(4) All existing emission units and nonsignificant modifications shall utilize ALARACT (see Appendix C).

(5) In order to implement these standards, the department may set limits on emission rates for specific radionuclides from specific emission units and/or set requirements and limitations on the operation of the emission unit(s) as specified in a license.

(6) All emissions of radionuclides, including those due to emergency conditions resulting from startup, shutdown, maintenance activities, or process upsets are subject to the standards of this section and, therefore, subject to the enforcement actions of WAC 246-247-100.

[Statutory Authority: RCW 70.98.050. 04-18-094, § 246-247-040, filed 9/1/04, effective 10/2/04. Statutory Authority: Chapters 70.98 and 70.94 RCW and chapter 173-480 WAC. 94-07-010, § 246-247-040, filed 3/4/94, effective 4/4/94. Statutory Authority: RCW 43.70.040. 91-02-049 (Order 121), recodified as § 246-247-040, filed 12/27/90, effective 1/31/91. Statutory Authority: RCW 70.98.080. 87-01-031 (Order 2450), § 402-80-050, filed 12/11/86.]

WAC 246-247-045 Where to find technical references. The following referenced document is available for purchase from the American National Standards Institute, 25 West 43rd Street, 4th Floor, New York, New York 10036:

ANSI/HPS N13.1-1999 "Sampling and Monitoring Releases of Airborne Radioactive Substances from the Stacks and Ducts of Nuclear Facilities."

This document is also available for inspection at the Washington State Office of Radiation Protection, Air Emissions and Defense Waste Section, 7171 Cleanwater Lane, Bldg. 5, Tumwater, WA 98501 (phone 360-236-3260); and at the Washington State Office of Radiation Protection, Air Emissions and Defense Waste Section, 309 Bradley Blvd., Suite 201, Richland, WA 99352 (phone 509-946-0363).

[Statutory Authority: RCW 70.98.050. 04-18-094, § 246-247-045, filed 9/1/04, effective 10/2/04.]

WAC 246-247-060 Applications, registration and licensing. This section describes the information requirements for approval to construct, modify, and operate an emission unit. Any notice of construction (NOC) requires the submittal of the information listed in Appendix A. Complex projects may require additional information. The applicant should contact the department early in the conceptual design phase for guidance on applicable control technologies to consider.

Appendices B and C outline the procedures to demonstrate compliance with the BARCT and ALARACT standards. Based on the Appendix A information provided, the department may advise the applicant which subset of technologies to consider as candidates for meeting BARCT or ALARACT requirements.

For those facilities subject to the operating permit regulations in chapter 173-401 WAC, the radioactive air emissions license will be incorporated as an applicable portion of the air operating permit issued by the department of ecology or a local air pollution control authority. The department will be responsible for determining the facility's compliance with and enforcing the requirements of the radioactive air emissions license.

(1) Requirements for new construction or modification of emission units.

(a) Early in the design phase, the applicant shall submit a NOC containing the information required in Appendix A.

(b) Within thirty days of receipt of the NOC, the department shall inform the applicant if additional information is required. The department may determine, on the basis of the information submitted, that the requirements of BARCT or ALARACT have been met, or may require the applicant to submit a BARCT or ALARACT demonstration compatible with Appendix B or C, respectively.

(c) Within sixty days of receipt of all required information, the department shall issue an approval or denial to construct. The department may require changes to the final proposed control technology.

(d) The applicant may request a phased approval process by so stating and submitting a limited application. The department may grant a conditional approval to construct for such activities as would not preclude the construction or installation of any control or monitoring equipment required after review of the completed application.

(e) The department shall issue a license, or amend an existing license, authorizing operation of the emission unit(s) when the proposed new construction or modification is complete. For facilities subject to the air operating permit requirements of chapter 173-401 WAC, the license shall become part of the air operating permit issued by the department of ecology or a local air pollution control authority. For new construction, this action shall constitute registration of the emission unit(s).

(2) Requirements for modification of unregistered emission units that are not exempt from these regulations.

(a) The applicant shall submit an application containing the information required in Appendix A.

(b) Within thirty days of receipt of the application, the department shall inform the applicant if additional information is required. The department may determine, on the basis of the information submitted, that the requirements of BARCT or ALARACT have been met, or may require the applicant to submit a BARCT or ALARACT demonstration compatible with Appendix B or C, respectively.

(c) Within sixty days of receipt of all required information, the department shall issue or amend the license. For facilities subject to the air operating permit requirements of chapter 173-401 WAC, the license shall become part of the air operating permit issued by the department of ecology or a local air pollution control authority. This action shall constitute registration of the emission unit(s). A determination of noncompliance may result in the issuance of a notice of violation.

(d) The department reserves the right to require the owner of an existing, unregistered emission unit to make modifications necessary to comply with the applicable standards of WAC 246-247-040.

(3) If an emission unit is in violation of any standards contained in WAC 246-247-040, the facility shall either submit a compliance plan which describes how it intends to

achieve compliance with the standards, and/or cease operation of the emission unit(s). The facility shall submit the compliance plan within forty-five days of the notice of violation. The cessation of operation of the emission unit(s) shall not necessarily exempt the facility from the requirements of this chapter if active or passive ventilation and radioactive air emission controls will still be required. The department reserves the right to take further enforcement action, if necessary, in accordance with WAC 246-247-100.

(4) The facility shall notify the department at least seven calendar days prior to any planned preoperational tests of new or modified emission units that involve emissions control, monitoring, or containment systems of the emission unit(s). The department reserves the right to witness or require preoperational tests involving the emissions control, monitoring, or containment systems of the emission unit(s).

(5) The license shall specify the requirements and limitations of operation to assure compliance with this chapter. The facility shall comply with the requirements and limitations of the license.

(6) All radioactive air emissions licenses issued by the department, except those issued to radioactive materials licensees, shall have an expiration date of five years from date of issuance or as specified in the air operating permit. For radioactive material licensees, the requirements and limitations for the operation of emission units shall be incorporated into their radioactive materials license, and shall expire when the radioactive materials license expires.

(7) Each federal facility that comes under the authority of this chapter shall hold one license for each site, base, or installation. When applicable, the license shall be part of the facility's air operating permit.

(8) Facilities may request a single categorical license which identifies limits and conditions of operation for similar multipurpose temporary and/or portable emission units. When applicable, the license shall be part of the facility's air operating permit.

(9) All facilities with licensed emission units, except for radioactive materials licensees, shall submit a request to the department for renewal of their radioactive air emissions license at least sixty days prior to expiration of the license or as required by the air operating permit. All renewal requests shall include a summary of the operational status of all emission units, the status of facility compliance with the standards of WAC 246-247-040, and the status of any corrective actions necessary to achieve compliance with the requirements of this chapter. Facilities with licensed emission units that also hold a radioactive materials license issued by the department shall submit this information along with their radioactive material license renewal submittal. If the department is unable to renew a radioactive air emissions license before its expiration date, the existing license, with all of its requirements and limitations, remains in force until the department either renews or revokes the license.

(10) For commercial nuclear power plants or any other thermal energy facility subject to chapter 80.50 RCW and to the requirements of this chapter, the radioactive air emissions license and amendments thereto shall be issued pursuant to a memorandum of agreement between the energy facility site evaluation council (EFSEC) and the department.

[Statutory Authority: Chapters 70.98 and 70.94 RCW and chapter 173-480 WAC. 94-07-010, § 246-247-060, filed 3/4/94, effective 4/4/94. Statutory Authority: RCW 43.70.040. 91-02-049 (Order 121), recodified as § 246-247-060, filed 12/27/90, effective 1/31/91. Statutory Authority: Chapter 70.98 RCW. 88-17-060 (Order 2671), § 402-80-065, filed 8/17/88.]

WAC 246-247-065 Fees. (1) All facilities under the authority of this chapter shall submit fees in accordance with WAC 246-254-160.

(2) Those facilities required by WAC 246-254-160(2) to submit an application fee, shall submit the fee with the application.

[Statutory Authority: Chapters 70.98 and 70.94 RCW and chapter 173-480 WAC. 94-07-010, § 246-247-065, filed 3/4/94, effective 4/4/94.]

WAC 246-247-075 Monitoring, testing and quality assurance. (1) All radioactive air emissions monitoring, testing, and quality assurance requirements of 40 CFR 61, subparts H and I (as effective on October 9, 2002), are adopted by reference, as applicable as specified by the referenced subparts. The department may, upon request by a nonfederal licensee, authorize provisions specific to that nonfederal licensee, other than those already set forth in WAC 246-247-075 for nonfederal emission unit monitoring, testing, or quality assurance, so long as the department finds reasonable assurance of compliance with the performance objectives of this chapter.

(2) Equipment and procedures used for the continuous monitoring of radioactive air emissions shall conform, as applicable, to the guidance contained in ANSI N13.1, ANSI N42.18, ANSI N323, ANSI N317, reference methods 1, 1A, 2, 2A, 2C, 2D, 4, 5, and 17 of 40 CFR Part 60, Appendix A, 40 CFR Part 52, Appendix E, and any other methods approved by the department.

(3) The operator of an emission unit with a potential-to-emit of less than 0.1 mrem/yr TEDE to the MEI may estimate those radionuclide emissions, in lieu of monitoring, in accordance with 40 CFR 61 Appendix D, or other procedure approved by the department. The department may require periodic confirmatory measurements (e.g., grab samples) during routine operations to verify the low emissions. Methods to implement periodic confirmatory monitoring shall be approved by the department.

(4) The department may allow a facility to use alternative monitoring procedures or methods if continuous monitoring is not a feasible or reasonable requirement.

(5) The following types of facilities shall determine radionuclide emissions in accordance with either a methodology referenced in subsections (1) through (4) of this section or the respective document referenced below:

(a) Nuclear power reactors licensed by the NRC: Offsite Dose Calculation Manual;

(b) Fuel fabrication plants licensed by the NRC: NRC's Regulatory Guide 4.16, dated December 1985;

(c) Uranium mills that are processing material: NRC's Regulatory Guide 4.14, dated April 1980.

(6) Licensed facilities shall conduct and document a quality assurance program. Except for those types of facilities specified in subsection (5) of this section, the quality assurance program shall be compatible with applicable national standards such as ANSI/ASME NQA-1-1988, ANSI/ASME NQA-2-1986, QA/R-2, and QA/R-5.

(7) Those types of facilities specified in subsection (5) of this section shall conduct and document a quality assurance program compatible with either the applicable national standards referenced in subsection (6) of this section or the NRC's Regulatory Guide 4.15, dated February 1979.

(8) Facilities shall monitor nonpoint and fugitive emissions of radioactive material.

(9) The department may conduct an environmental surveillance program to ensure that radiation doses to the public from emission units are in compliance with applicable standards. The department may require the operator of any emission unit to conduct stack sampling, ambient air monitoring, or other testing as necessary to demonstrate compliance with the standards in WAC 246-247-040.

(10) The department may require the owner or operator of an emission unit to make provision, at existing emission unit sampling stations, for the department to take split or collocated samples of the emissions.

(11) The planning for any proposed new construction or significant modification of the emission unit must address accidental releases with a probability of occurrence during the expected life of the emission unit of greater than one percent.

(12) All facilities must be able to demonstrate that appropriate supervisors and workers are adequately trained in the use and maintenance of emission control and monitoring systems, and in the performance of associated test and emergency response procedures.

(13) All facilities must be able to demonstrate the reliability and accuracy of the radioactive air emissions monitoring data.

[Statutory Authority: RCW 70.98.050. 04-18-094, § 246-247-075, filed 9/1/04, effective 10/2/04. Statutory Authority: Chapters 70.98 and 70.94 RCW and chapter 173-480 WAC. 94-07-010, § 246-247-075, filed 3/4/94, effective 4/4/94.]

WAC 246-247-080 Inspections, reporting, and recordkeeping. (1) The department reserves the right to inspect and audit all construction activities, equipment, operations, documents, data, and other records related to compliance with the requirements of this chapter. The department may require a demonstration of ALARACT at any time.

(2) All reporting and recordkeeping requirements of 40 CFR 61, subparts H and I (as effective on October 9, 2002), are adopted by reference, as applicable as specified by the referenced subparts. The department may, upon request by a nonfederal licensee, authorize provisions specific to that nonfederal licensee, other than those already set forth in WAC 246-247-080 for nonfederal emission unit inspections, reporting, or recordkeeping, so long as the department finds reasonable assurance of compliance with the performance objectives of this chapter.

(3) The facility shall annually submit to the department the information requirements adopted in subsection (2) of this section, as applicable, along with the following additional information, as applicable:

(a) The results of emission measurements for those emission units subject only to periodic confirmatory measurements;

(b) Wind rose or joint frequency table;

(c) Annual average ambient temperature;

(d) Annual average emission unit gas temperature, if available;

(e) Annual total rainfall;

(f) Annual average emission unit flow rate and total volume of air released during the calendar year.

If this additional information is available in another annual report, the facility may instead provide a copy of that report along with the information requirements in this subsection. Annual reports are due by June 30 for the previous calendar year's operations.

(4) Any report or application that contains proprietary or procurement-sensitive information shall be submitted to the department with those portions so designated. The department shall hold this information confidential, unless required to release the information pursuant to laws, regulations, or court order.

(5) The facility shall notify the department within twenty-four hours of any shutdown, or of any transient abnormal condition lasting more than four hours or other change in facility operations which, if allowed to persist, would result in emissions of radioactive material in excess of applicable standards or license requirements. If requested by the department, the facility shall submit a written report within ten days including known causes, corrective actions taken, and any preventive measures taken or planned to minimize or eliminate the chance of recurrence.

(6) The facility shall file a report of closure with the department whenever operations producing emissions of radioactive material are permanently ceased at any emission unit (except temporary emission units) regulated under this chapter. The closure report shall indicate whether, despite cessation of operations, there is still a potential for radioactive air emissions and a need for an active or passive ventilation system with emission control and/or monitoring devices. If decommissioning is planned and will constitute a modification, a NOC is required, as applicable, in accordance with WAC 246-247-060.

(7) The facility shall maintain a log for each emission unit that has received categorical approval under WAC 246-247-060(8). The log shall contain records of important operations parameters including the date, location, and duration of the release, measured or calculated radionuclide concentrations, the type of emissions (liquid, gaseous, solid), and the type of emission control and monitoring equipment.

(8) The facility shall maintain readily retrievable storage areas for all records and documents related to, and which may help establish compliance with, the requirements of this chapter. The facility shall keep these records available for department inspection for at least five years.

(9) The facility shall ensure all emission units are fully accessible to department inspectors. In the event the hazards associated with accessibility to a unit require training and/or restrictions or requirements for entry, the facility owner or operator shall inform the department, prior to arrival, of those restrictions or requirements. The owner or operator shall be responsible for providing the necessary training, escorts, and support services to allow the department to inspect the facility.

(10) The facility shall make available, in a timely manner, all documents requested by the department for review. The facility shall allow the department to review documents

in advance of an inspection. The facility shall allow access to classified documents by representatives of the department with the appropriate security clearance and a demonstrable need-to-know.

(11) The facility shall respond in writing in a timely manner, or within a time limit set by the department, to inspection results which require the facility to implement corrective actions or any other actions so directed by the department.

[Statutory Authority: RCW 70.98.050. 04-18-094, § 246-247-080, filed 9/1/04, effective 10/2/04. Statutory Authority: Chapters 70.98 and 70.94 RCW and chapter 173-480 WAC. 94-07-010, § 246-247-080, filed 3/4/94, effective 4/4/94. Statutory Authority: RCW 43.70.040. 91-02-049 (Order 121), recodified as § 246-247-080, filed 12/27/90, effective 1/31/91. Statutory Authority: RCW 70.98.080. 87-01-031 (Order 2450), § 402-80-080, filed 12/11/86.]

WAC 246-247-085 Compliance determination for existing emission units and facilities. (1) All procedures for determining compliance with the dose equivalent standards of 40 CFR 61, subparts H and I (as effective on October 9, 2002), are adopted by reference, as applicable as specified by the referenced subparts. The department may, upon request of a nonfederal licensee, authorize provisions specific to that nonfederal licensee, other than those already set forth in WAC 246-247-085 for determining compliance with appropriate dose equivalent standards by nonfederal emission units, so long as the department finds reasonable assurance of compliance with the performance objectives of this chapter.

(2) Facilities subject to 40 CFR 61 shall use computer codes or procedures approved by the EPA to determine the TEDE to the MEI; all other facilities shall use computer codes or procedures approved by the department.

(3) The determination of compliance with the dose equivalent standard of WAC 246-247-040 shall include all radioactive air emissions resulting from routine and nonroutine operations for the past calendar year.

[Statutory Authority: RCW 70.98.050. 04-18-094, § 246-247-085, filed 9/1/04, effective 10/2/04. Statutory Authority: Chapters 70.98 and 70.94 RCW and chapter 173-480 WAC. 94-07-010, § 246-247-085, filed 3/4/94, effective 4/4/94.]

WAC 246-247-100 Enforcement actions. (1) In accordance with RCW 70.94.422, the department may take any of the following actions to enforce compliance with the provisions of this chapter:

(a) Notice of violation and compliance order (RCW 70.94.332).

(b) Restraining order or temporary or permanent injunction (RCW 70.94.425; also RCW 70.98.140).

(c) Penalty: Fine and/or imprisonment (RCW 70.94.-430).

(d) Civil penalty: Up to ten thousand dollars for each day of continued noncompliance (RCW 70.94.431 (1) through (7)).

(e) Assurance of discontinuance (RCW 70.94.435).

(2) The department, in accordance with RCW 70.98.050 (4)(l), may issue subpoenas in order to compel attendance of witnesses and/or production of records or documents in connection with any adjudicative or other administrative proceeding.

(3) The department, in accordance with RCW 70.98.160, may impound sources of ionizing radiation.

(4) The secretary of the department, in accordance with RCW 43.70.190, is authorized to bring an action to prohibit a violation or a threatened violation of any department rules or regulation, or to bring any legal proceeding authorized by law to a county superior court.

(5) Any party, against which an enforcement action is brought by the department, has the right to submit an application for the adjudicative process in accordance with chapter 246-10 WAC and chapter 34.05 RCW.

[Statutory Authority: Chapters 70.98 and 70.94 RCW and chapter 173-480 WAC. 94-07-010, § 246-247-100, filed 3/4/94, effective 4/4/94. Statutory Authority: RCW 43.70.040. 91-02-049 (Order 121), recodified as § 246-247-100, filed 12/27/90, effective 1/31/91. Statutory Authority: RCW 70.98.080. 87-01-031 (Order 2450), § 402-80-100, filed 12/11/86.]

WAC 246-247-110 Appendix A—Application information requirements. (1) Name and address of the facility, and location (latitude and longitude) of the emission unit(s).

(2) Name, title, address, and phone number of the responsible manager.

(3) Identify the type of proposed action for which this application is submitted:

(a) Construction of new emission unit(s);

(b) Modification of existing emission unit(s); identify whether this is a significant modification;

(c) Modification of existing unit(s), unregistered.

(4) If this project is subject to the requirements of the State Environmental Policy Act (SEPA) contained in chapter 197-11 WAC, provide the name of the lead agency, lead agency contact person, and their phone number.

(5) Describe the chemical and physical processes upstream of the emission unit(s).

(6) Describe the existing and proposed (as applicable) abatement technology. Describe the basis for the use of the proposed system. Include expected efficiency of each control device, and the annual average volumetric flow rate(s) in meters^3/sec for the emission unit(s).

(7) Provide conceptual drawings showing all applicable control technology components from the point of entry of radionuclides into the vapor space to release to the environment.

(8) Identify each radionuclide that could contribute greater than ten percent of the potential-to-emit TEDE to the MEI, or greater than 0.1 mrem/yr potential-to-emit TEDE to the MEI.

(9) Describe the effluent monitoring system for the proposed control system. Describe each piece of monitoring equipment and its monitoring capability, including detection limits, for each radionuclide that could contribute greater than ten percent of the potential-to-emit TEDE to the MEI, or greater than 0.1 mrem/yr potential-to-emit TEDE to the MEI, or greater than twenty-five percent of the TEDE to the MEI, after controls. Describe the method for monitoring or calculating those radionuclide emissions. Describe the method with detail sufficient to demonstrate compliance with the applicable requirements.

(10) Indicate the annual possession quantity for each radionuclide.

(11) Indicate the physical form of each radionuclide in inventory: Solid, particulate solids, liquid, or gas.

(12) Indicate the release form of each radionuclide in inventory: Particulate solids, vapor, or gas. Give the chemical form and ICRP 30 solubility class, if known.

(13) Release rates.

(a) New emission unit(s): Give predicted release rates without any emissions control equipment (the potential-to-emit) and with the proposed control equipment using the efficiencies described in subsection (6) of this section.

(b) Modified emission unit(s): Give predicted release rates without any emissions control equipment (the potential-to-emit) and with the existing and proposed control equipment using the efficiencies described in subsection (6) of this section. Provide the latest year's emissions data or emissions estimates.

In all cases, indicate whether the emission unit is operating in a batch or continuous mode.

(14) Identify the MEI by distance and direction from the emission unit(s). The MEI is determined by considering distance, windrose data, presence of vegetable gardens, and meat or milk producing animals at unrestricted areas surrounding the emission unit.

(15) Calculate the TEDE to the MEI using an approved procedure (see WAC 246-247-085). For each radionuclide identified in subsection (8) of this section, determine the TEDE to the MEI for existing and proposed emission controls, and without any emission controls (the potential-to-emit) using the release rates from subsection (13) of this section. Provide all input data used in the calculations.

(16) Provide cost factors for construction, operation, and maintenance of the proposed control technology components and system, if a BARCT or ALARACT demonstration is not submitted with the NOC.

(17) Provide an estimate of the lifetime for the facility process with the emission rates provided in this application.

(18) Indicate which of the following control technology standards have been considered and will be complied with in the design and operation of new or modified emission unit(s) described in this application:

ASME/ANSI AG-1, Code on Nuclear Air and Gas Treatment (where there are conflicts in standards with the other listed references, this standard shall take precedence)

ASME/ANSI N509, Nuclear Power Plant Air-Cleaning Units and Components

ASME/ANSI N510, Testing of Nuclear Air Treatment Systems

ANSI/ASME NQA-1, Quality Assurance Program Requirements for Nuclear Facilities

40 CFR 60, Appendix A, Methods 1, 1A, 2, 2A, 2C, 2D, 4, 5, and 17

ANSI/HPS N13.1-1999, Sampling and Monitoring Releases of Airborne Radioactive Substances from the Stacks and Ducts of Nuclear Facilities if the unit's potential-to-emit exceeds 0.1 mrem/yr TEDE to the MEI and the unit is required to meet ANSI/HPS N13.1-1999 under federal regulations.

ANSI N13.1-1969, Guide to Sampling Airborne Radioactive Materials in Nuclear Facilities if the unit's potential-to-emit exceeds 0.1 mrem/yr TEDE to the MEI and the unit is not required to meet ANSI/HPS N13.1-1999 under federal regulations.

For each standard not so indicated, give reason(s) to support adequacy of the design and operation of the emission unit(s) as proposed.

[Statutory Authority: RCW 70.98.050. 04-18-094, § 246-247-110, filed 9/1/04, effective 10/2/04. Statutory Authority: Chapters 70.98 and 70.94 RCW and chapter 173-480 WAC. 94-07-010, § 246-247-110, filed 3/4/94, effective 4/4/94.]

WAC 246-247-120 Appendix B—BARCT compliance demonstration. Purpose. A BARCT demonstration is used to choose control technologies for the mitigation of emissions of radioactive material from new emission units or significant modifications to emission units. The bases for the BARCT demonstration requirements are the BARCT standard given in WAC 246-247-040, and the definition of BARCT given in WAC 246-247-030. This procedure incorporates certain implementing criteria that enable the department to evaluate a facility's compliance with the BARCT standard. It is the applicant's responsibility to demonstrate the effectiveness of their BARCT determination to the department. The facility should contact the department at the conceptual design phase for guidance on the BARCT demonstration requirements. The department may adjust this demonstration procedure on a case-by-case basis, as needed, to ensure compliance with the substantive standard.

Scope. The BARCT demonstration includes the abatement technology and indication devices that demonstrate the effectiveness of the abatement technology from entry of radionuclides into the ventilated vapor space to release to the environment. The applicant shall evaluate all available control technologies that can reduce the level of radionuclide emissions.

Technology Standards. The BARCT demonstration and the emission unit design and construction must meet, as applicable, the technology standards shown below if the unit's potential-to-emit exceeds 0.1 mrem/yr TEDE to the MEI. If the potential-to-emit is below this value, the standards must be met only to the extent justified by a cost/benefit evaluation.

ASME/ANSI AG-1, Code on Nuclear Air and Gas Treatment (where there are conflicts in standards with the other listed references, this standard shall take precedence)

ASME/ANSI N509, Nuclear Power Plant Air-Cleaning Units and Components

ASME/ANSI N510, Testing of Nuclear Air Treatment Systems

ANSI/ASME NQA-1, Quality Assurance Program Requirements for Nuclear Facilities

40 CFR 60, Appendix A, Methods 1, 1A, 2, 2A, 2C, 2D, 4, 5, and 17

ANSI/HPS N13.1-1999, Sampling and Monitoring Releases of Airborne Radioactive Substances from the Stacks and Ducts of Nuclear Facilities

The following standards and references are recommended as guidance only:

ANSI/ASME NQA-2, Quality Assurance Requirements for Nuclear Facilities

ANSI N42.18, Specification and Performance of On-Site Instrumentation for Continuously Monitoring Radioactivity in Effluents

ERDA 76-21, Nuclear Air Cleaning Handbook

ACGIH 1988, Industrial Ventilation, A Manual of Recommended Practice, 20th ed., American Conference of Governmental Industrial Hygienists

BARCT Demonstration Procedure.

Step 1. **Define facility process variables.** Describe the physical and chemical process. Include the potential radionuclide release rates (by isotope, in units of curies/year), process variables (such as flow rate, temperature, humidity, chemical composition), and other technical considerations. Base the radionuclide release rate on the potential-to-emit.

Radionuclides selected for consideration in the BARCT demonstration shall include those which contribute more than ten percent of the potential TEDE to the MEI or more than 0.1 mrem/yr, and any others which the department determines are necessary.

Step 2. **Gather information on all available control technologies.** Search for all available technologies that can reduce the emissions levels for the radionuclides selected in Step 1. Sources of information shall include previous BARCT demonstrations, regulatory authorities, industry or regulatory agency data bases, literature searches, information from technology vendors, research and development reports, and any other means necessary to identify all available technologies. "Available technology" includes any technology that is commercially available. Recently completed searches may be used with department approval.

Step 3. **Determine technical feasibility.** Determine technical feasibility by evaluating vendor specifications for available control technologies identified in Step 2 with respect to the process variables identified in Step 1. Evaluate combinations of abatement technology and control devices by component, and the system as a whole.

If a control technology has poor safety, reliability, or control effectiveness as achieved in practice under the proposed process conditions, or the technology is not applicable to the emission unit under consideration, the technology may be eliminated with supporting documentation of the technical infeasibility.

Step 4. **List all feasible control technologies in order of effectiveness.** Evaluate feasible control technologies for efficiency (effectiveness) in reducing the TEDE to the MEI. List them in order, with the most effective first. If the most effective feasible technology is proposed as BARCT, the demonstration is complete at this step.

Step 5. **Evaluate the environmental, energy, and economic impacts.** Evaluate each control technology in succession, beginning with the most effective. Present an objective evaluation considering both beneficial and adverse impacts. Quantify the data where possible. Impact cost and effectiveness evaluations are incremental and include only that portion of the facility which comes under the authority of this chapter. Evaluate at least the following impacts:

Environmental impact - Determine the incremental environmental impact, both beneficial and adverse. Evaluate the beneficial impact of reduction in the TEDE to the surrounding population or, at a minimum, to the MEI due to the abatement of radioactive air emissions. Consider the adverse impacts from waste generation (radioactive and nonradioactive, air and nonair), disposal and stabilization, construction of control equipment, and the health and safety to both radiation workers and the general public.

Energy impact - Determine the incremental energy impact. Include the impact of any resulting need for new services such as energy distribution systems.

Economic impact - Determine the incremental economic impact. Determine capital and expense costs including design, development, procurement, construction, operation, maintenance, taxes, waste disposal, and any other applicable financial components. Base all costs on the expected lifetime of the emission unit and reduce to an annualized cost for evaluation and comparison.

The adverse economic impact compared to the beneficial impact, including reduction in TEDE to the surrounding population or the MEI, is a measure of the cost versus benefit for the control technology evaluated.

The most effective technology may be eliminated from consideration if the applicant can demonstrate to the department's satisfaction that the technology has unacceptable impacts. State clearly the basis for this conclusion and proceed to the next most effective control technology. If the next most effective technology is proposed as BARCT, the demonstration is complete; otherwise, evaluate the control technology for impacts in accordance with this step.

If the control technology cannot be eliminated on the basis of its impacts, it is proposed as BARCT.

Reporting. Prepare a BARCT compliance demonstration report for department review. Provide sufficient information such that the department can validate essential results. If no control technology is feasible, and/or emissions are unacceptable, the department reserves the right to prohibit the construction and operation of the emission unit(s).

[Statutory Authority: RCW 70.98.050. 04-18-094, § 246-247-120, filed 9/1/04, effective 10/2/04. Statutory Authority: Chapters 70.98 and 70.94 RCW and chapter 173-480 WAC. 94-07-010, § 246-247-120, filed 3/4/94, effective 4/4/94.]

WAC 246-247-130 Appendix C—ALARACT compliance demonstration. Purpose. An ALARACT demonstration is used for inspection or audit purposes, and to demonstrate compliance with the substantive ALARACT technology standard as required by this chapter. An ALARACT demonstration is used to evaluate the adequacy of control technology on existing emission units and to choose control technologies for proposed nonsignificant modifications of emission units. The bases for the ALARACT demonstration requirements are the ALARACT standards given in WAC 246-247-040 and the definition of ALARACT given in WAC 246-247-030. It is the applicant's responsibility to demonstrate the effectiveness of their ALARACT determination to the department. The department may adjust this demonstration procedure on a case-by-case basis, as needed, to ensure compliance with the substantive standard.

Scope. The ALARACT demonstration includes the abatement technology and indication devices, from entry of radionuclides into the ventilated vapor space to release to the environment. The facility shall evaluate the existing control system in relation to applicable technology standards, and

other control technologies that have been successfully operated for similar applications.

Technology Standards. The ALARACT demonstration and the emission unit design and construction must meet, as applicable, the technology standards shown below if the unit's potential-to-emit exceeds 0.1 mrem/yr TEDE to the MEI. If the potential-to-emit is below this value, the standards must be met only to the extent justified by a cost/benefit evaluation.

ASME/ANSI AG-1, Code on Nuclear Air and Gas Treatment (where there are conflicts in standards with the other listed references, this standard shall take precedence)

ASME/ANSI N509, Nuclear Power Plant Air-Cleaning Units and Components

ASME/ANSI N510, Testing of Nuclear Air Treatment Systems

ANSI/ASME NQA-1, Quality Assurance Program Requirements for Nuclear Facilities

40 CFR 60, Appendix A, Methods 1, 1A, 2, 2A, 2C, 2D, 4, 5, and 17

ANSI/HPS N13.1-1999, Sampling and Monitoring Releases of Airborne Radioactive Substances from the Stacks and Ducts of Nuclear Facilities (for emission units constructed or significantly modified after October 15, 2004).

The following standards and references are recommended as guidance only:

ANSI/ASME NQA-2, Quality Assurance Requirements for Nuclear Facilities

ANSI N42.18, Specification and Performance of On-Site Instrumentation for Continuously Monitoring Radioactivity in Effluents

ERDA 76-21, Nuclear Air Cleaning Handbook

ACGIH 1988, Industrial Ventilation, A Manual of Recommended Practice, 20th ed., American Conference of Governmental Industrial Hygienists

ALARA References. "Health Physics Manual of Good Practice for Reducing Radiation Exposure to Levels that are As Low As Reasonably Achievable (ALARA)," PNL-6577, June, 1988; prepared for the USDOE by Pacific Northwest Laboratories (Battelle Memorial Institute).

"A Guide to Reducing Radiation Exposure to As Low As Reasonably Achievable (ALARA)," DOE/EV/1830-T5, April, 1980, R.L. Kathren and J.M. Selby; prepared for the USDOE by Pacific Northwest Laboratories (Battelle Memorial Institute).

"A Practical Method of Performing Cost-Benefit Analysis of Occupational and Environmental Protective Measures," WHC-SA-0484-FP, March, 1989, G.F. Boothe and D.E. Webb; prepared for the USDOE by Westinghouse Hanford Company.

[Statutory Authority: RCW 70.98.050. 04-18-094, § 246-247-130, filed 9/1/04, effective 10/2/04. Statutory Authority: Chapters 70.98 and 70.94 RCW and chapter 173-480 WAC. 94-07-010, § 246-247-130, filed 3/4/94, effective 4/4/94.]

Chapter 246-249 WAC

RADIOACTIVE WASTE—USE OF THE COMMERCIAL DISPOSAL SITE

WAC

246-249-001 Purpose and scope.
246-249-010 Definitions.
246-249-020 Site use permit.
246-249-030 Waste shipment certification.
246-249-040 Classification of radioactive waste for near-surface disposal.
246-249-050 Acceptable radioactive waste forms and packaging.
246-249-060 Labeling.
246-249-070 Variances.
246-249-080 Naturally occurring and accelerator produced radioactive material (NARM), excluding source material.
246-249-090 Transfer for disposal and manifests.

WAC 246-249-001 Purpose and scope. These rules govern generators and brokers of low-level radioactive waste (LLRW) and generators and brokers of naturally occurring and accelerator produced radioactive material (NARM) seeking to dispose waste at any commercial disposal facility in the state of Washington. For purposes of this chapter, the term "radioactive waste" refers to both low-level radioactive waste and naturally occurring and accelerator produced radioactive material. These rules are in addition to applicable requirements of the United States Nuclear Regulatory Commission (NRC), the United States Department of Transportation (DOT), and other requirements of Title 246 WAC, the requirements of the department of ecology, Title 173 WAC, and conditions of the license issued to the disposal site operator(s).

[Statutory Authority: RCW 70.98.050. 05-21-128, 05-23-113 and 06-01-105, § 246-249-001, filed 10/19/05, 11/18/05 and 12/21/05, effective 8/15/06. Statutory Authority: RCW 70.98.050 and 70.98.080. 91-16-109 (Order 187), § 246-249-001, filed 8/7/91, effective 9/7/91. Statutory Authority: RCW 43.70.040. 91-02-049 (Order 121), recodified as § 246-249-001, filed 12/27/90, effective 1/31/91. Statutory Authority: RCW 70.98.080. 87-01-031 (Order 2450), § 402-62-010, filed 12/11/86.]

WAC 246-249-010 Definitions. As used in this chapter, the following definitions apply:

(1) "Low-level radioactive waste," consistent with the Low-Level Radioactive Waste Policy Amendments Act of 1985, Public Law 99-240, means radioactive waste not classified as high-level radioactive waste, spent nuclear fuel, or by-product material as defined in section 11e.(2) of the Atomic Energy Act.

(2) "Broker" means a person who performs one or more of the following functions for a radioactive waste generator:

(a) Arranges for transportation of the radioactive waste;

(b) Collects and/or consolidates shipments of radioactive waste (waste collector);

(c) Processes radioactive waste in some manner, not including carriers whose sole function is to transport radioactive waste (waste processor).

(3) "Chelating agent" means amine polycarboxylic acids (e.g., EDTA, DTPA), hydroxy-carboxylic acids, and polycarboxylic acids (e.g., citric acid, carbolic acid, and glucinic acid).

(4) "Chemical description" means a description of the principal chemical characteristics of a radioactive waste.

(5) "Computer-readable medium" means the regulatory agency's computer can transfer the information from the medium into its memory.

(6) "Consignee" means the designated receiver of the shipment of radioactive waste.

(7) "Decontamination facility" means a facility operating under a commission or agreement state license whose principal purpose is decontamination of equipment or materials to

accomplish recycle, reuse, or other waste management objectives, and, for purposes of this section, is not considered to be a consignee for radioactive waste shipments.

(8) "Disposal container" means a container principally used to confine radioactive waste during disposal operations at a land disposal facility (also see "high integrity container"). Note that for some shipments, the disposal container may be the transport package.

(9) "EPA identification number" means the number assigned by the EPA administrator under 40 CFR Part 263.

(10) "Generator" means any entity including a licensee operating under a commission or agreement state license who:

(a) Is a waste generator as defined in this part; or

(b) Is the entity or licensee to whom waste can be attributed within the context of the Low-Level Radioactive Waste Policy Amendments Act of 1985 (e.g., waste generated as a result of decontamination or recycle activities).

(11) "High integrity container (HIC)" means a container commonly designed to meet the structural stability requirements of this chapter, and to meet department of transportation Type A package requirements.

(12) "Land disposal facility" means the land, buildings, and equipment which are intended to be used for the disposal of radioactive wastes. For the purposes of this chapter, a land disposal facility does not include a geologic repository.

(13) "Motor vehicle" means any vehicle, truck, tractor, semi-trailer, or trailer (or any permitted combination of these), driven by mechanical power and used upon the highways to carry property.

(14) "Motor common carrier" means a person holding itself out to the general public to provide motor vehicle transportation for compensation over regular or irregular routes, or both.

(15) "Motor contract carrier" means a person other than a common carrier providing motor vehicle transportation of property for compensation under continuing agreements with one or more persons.

(16) "Motor private carrier" means a person, other than a motor carrier, transporting property by motor vehicle when the person is the owner, lessee, or bailee of the property being transported; and the property is being transported for sale, lease, rent, or bailment, or to further a commercial enterprise.

(17) "Motor carrier" means a motor common carrier and a motor contract carrier.

(18) "Naturally occurring and accelerator produced material" (NARM) means any radioactive material of natural or accelerator origin; but does not include by-product, source or special nuclear material. Diffuse NARM is low activity NARM that has less than 2 nCi/g of 226-Ra.

(19) "NRC Forms 540, 540A, 541, 541A, 542, and 542A" are official NRC Forms referenced in this section. Licensees need not use originals of these NRC Forms as long as any substitute forms are equivalent to the original documentation in respect to content, clarity, size, and location of information. Upon agreement between the shipper and consignee, NRC Forms 541 (and 541A) and NRC Forms 542 (and 542A) may be completed, transmitted, and stored in electronic media. The electronic media must have the capability for producing legible, accurate, and complete records in the format of the uniform manifest.

(20) "Package" means the assembly of components necessary to ensure compliance with the packaging requirements of DOT regulations, together with its radioactive contents, as presented for transport.

(21) "Physical description" means the items on NRC Form 541 that describe a radioactive waste.

(22) "Radioactive waste" means either or both low-level radioactive waste and naturally occurring and accelerator produced radioactive material.

(23) "Residual waste" means radioactive waste resulting from processing or decontamination activities that cannot be easily separated into distinct batches attributable to specific waste generators. This waste is attributable to the processor or decontamination facility, as applicable.

(24) "Rollover volume" means the difference, in a calendar year, between the volume of NARM disposed at the disposal site and the site volume limit set forth under WAC 246-249-080(4).

(25) "Shipper" means the licensed entity (i.e., the waste generator, waste collector, or waste processor) who offers radioactive waste for transportation, typically consigning this type of waste to a licensed waste collector, waste processor, or land disposal facility operator.

(26) "Shipment" means the total radioactive waste material transported in one motor vehicle.

(27) "Shipping paper" means NRC Form 540 and, if required, NRC Form 540A which includes the information required by DOT in 49 CFR Part 172.

(28) "Transuranic waste" means material contaminated with elements that have an atomic number greater than 92.

(29) "Uniform Low-Level Radioactive Waste Manifest or uniform manifest" means the combination of NRC Forms 540, 541, and, if necessary, 542, and their respective continuation sheets as needed, or equivalent.

(30) "Waste collector" means an entity, operating under a commission or agreement state license, whose principal purpose is to collect and consolidate waste generated by others, and to transfer this waste, without processing or repackaging the collected waste, to another licensed waste collector, licensed waste processor, or licensed land disposal facility.

(31) "Waste description" means the physical, chemical and radiological description of a radioactive waste as called for on NRC Form 541.

(32) "Waste generator" means an entity, operating under a commission or agreement state license, who:

(a) Possesses any material or component that contains radioactivity or is radioactively contaminated for which the licensee foresees no further use; and

(b) Transfers this material or component to a licensed land disposal facility or to a licensed waste collector or processor for handling or treatment prior to disposal.

A licensee performing processing or decontamination services may be a "waste generator" if the transfer of radioactive waste from its facility is defined as "residual waste."

(33) "Waste processor" means an entity, operating under a commission or agreement state license, whose principal purpose is to process, repackage, or otherwise treat radioactive material or waste generated by others prior to eventual transfer of waste to a licensed low-level radioactive waste land disposal facility.

(34) "Waste type" means a waste within a disposal container having a unique physical description (i.e., a specific waste descriptor code or description; or a waste sorbed on or solidified or stabilized in a specifically defined media).

[Statutory Authority: RCW 70.98.050. 05-21-128, 05-23-113 and 06-01-105, § 246-249-010, filed 10/19/05, 11/18/05 and 12/21/05, effective 8/15/06. Statutory Authority: RCW 70.98.050 and 70.98.080. 98-09-117, § 246-249-010, filed 4/22/98, effective 5/23/98; 91-16-109 (Order 187), § 246-249-010, filed 8/7/91, effective 9/7/91. Statutory Authority: RCW 43.70.-040. 91-02-049 (Order 121), recodified as § 246-249-010, filed 12/27/90, effective 1/31/91. Statutory Authority: RCW 70.98.080. 87-01-031 (Order 2450), § 402-62-020, filed 12/11/86.]

WAC 246-249-020 Site use permit. (1) Each generator and each broker of radioactive waste shall possess a valid and unencumbered site use permit prior to the shipment of such waste to, or the disposal of such waste at any commercial disposal facility in the state of Washington and shall have complied with the permit requirements of the department of ecology.

(2) Suspension or revocation of permit.

(a) The failure of one or more packages in a shipment of waste to be in compliance with one or more of the requirements of the license issued to the commercial low-level radioactive waste disposal site operator, Title 246 WAC, the United States Nuclear Regulatory Commission, the United States Department of Transportation, or conditions of the disposal site operator's radioactive materials license may cause the suspension of the site use permit of the responsible generator and/or broker.

(b) The site use permit of a generator and/or broker may be suspended or revoked if any other licensed commercial low-level radioactive waste disposal site in the United States has refused to accept waste from that generator or broker.

(c) A suspended site use permit may be reinstated provided:

(i) The generator and/or broker submits a quality assurance procedure designed to correct previous problems and to achieve and maintain compliance with all applicable requirements; and

(ii) A point-of-origin inspection by the state of Washington, of the generator's and/or broker's waste management activities, indicates compliance with all applicable requirements and regulations.

(3) Brokered shipments.

(a) It is the broker's responsibility to assure that a generator of waste has a valid unencumbered site use permit prior to shipment of waste for disposal.

(b) A broker, as consignor, assumes coresponsibility with a generator for all aspects of that generator's waste until it can be documented to the department's satisfaction that the broker's sphere of responsibility was limited.

[Statutory Authority: Chapter 70.98 RCW. 95-13-094, § 246-249-020, filed 6/21/95, effective 7/22/95. Statutory Authority: RCW 70.98.050 and 70.98.-080. 91-16-109 (Order 187), § 246-249-020, filed 8/7/91, effective 9/7/91. Statutory Authority: RCW 43.70.040. 91-02-049 (Order 121), recodified as § 246-249-020, filed 12/27/90, effective 1/31/91. Statutory Authority: RCW 70.98.080. 87-01-031 (Order 2450), § 402-62-030, filed 12/11/86.]

WAC 246-249-030 Waste shipment certification. (1) A low-level radioactive waste shipment certification, Form RHF-31, must accompany each shipment of radioactive waste to a licensed low-level radioactive waste burial site. All three sections of the form must be completed. The certification shall be submitted at the disposal site to the department of health or its designee, and must be judged to be properly executed prior to the acceptance of the waste by the site operator. If a broker is involved, the broker's and carrier's sections must bear original signatures. The generator's signature need not be an original signature. If a broker is acting as the processor and/or packager of the waste, the broker may act as the agent of the generator and may sign the certification statement for the generator, provided the name and site use permit number of the original generator are identified. If no broker is involved, the generator shall so signify by entry in the broker's section of the form that no broker was involved, e.g., "no broker," and the generator and carrier's section must bear original signatures.

(2) In the case of brokered shipments from more than a single generator, information on each generator's certification shall include data clearly identifying, without reference to other documentation, each package transferred from that generator to the broker. The data shall be compatible with package identifications on the shipment manifest (RSR) from the broker, and with identification markings on the packages.

[Statutory Authority: RCW 70.98.050 and 70.98.080. 91-16-109 (Order 187), § 246-249-030, filed 8/7/91, effective 9/7/91. Statutory Authority: RCW 43.70.040. 91-02-049 (Order 121), recodified as § 246-249-030, filed 12/27/90, effective 1/31/91. Statutory Authority: RCW 70.98.080. 87-01-031 (Order 2450), § 402-62-040, filed 12/11/86.]

WAC 246-249-040 Classification of radioactive waste for near-surface disposal. (1) **Considerations.** Determination of the classification of waste involves two considerations. First, consideration must be given to the concentration of long-lived radionuclides (and their shorter-lived precursors) whose potential hazard will persist long after such precautions as institutional controls, improved waste form, and deeper disposal have ceased to be effective. These precautions delay the time when long-lived radionuclides could cause exposures. In addition, the magnitude of the potential dose is limited by the concentration and availability of the radionuclide at the time of exposure. Second, consideration must be given to the concentration of shorter-lived radionuclides for which requirements on institutional controls, waste form, and disposal methods are effective.

(2) **Classes of waste.**

(a) Class A waste is waste that is usually segregated from other waste classes at the disposal site. The physical form and characteristics of Class A waste must meet the minimum requirements set forth in WAC 246-249-050(1). If Class A waste also meets the stability requirements set forth in WAC 246-249-050(2), it is not necessary to segregate the waste for disposal.

(b) Class B waste is waste that must meet more rigorous requirements on waste form to ensure stability after disposal. The physical form and characteristics of Class B waste must meet both the minimum and stability requirements set forth in WAC 246-249-050.

(c) Class C waste is waste that not only must meet more rigorous requirements on waste form to ensure stability but also requires additional measures at the disposal facility to protect against inadvertent intrusion. The physical form and

characteristics of Class C waste must meet both the minimum and stability requirements set forth in WAC 246-249-050.

(3) **Classification determined by long-lived radionuclides.** If the waste contains only radionuclides listed in Table 1, classification shall be determined as follows:

(a) If the concentration does not exceed 0.1 times the value in Table 1, the waste is Class A.

(b) If the concentration exceeds 0.1 times the value in Table 1, but does not exceed the value in Table 1, the waste is Class C.

(c) If the concentration exceeds the value in Table 1, the waste is not generally acceptable for near-surface disposal.

(d) For waste containing mixtures of radionuclides listed in Table 1, the total concentration shall be determined by the sum of fractions rule described in subsection (7) of this section.

Table 1

Radionuclide	Concentration Curies/Cubic Meter
C-14	8
C-14 in activated metal	80
Ni-59 in activated metal	220
Nb-94 in activated metal	0.2
Tc-99	3
I-129	0.08
Alpha emitting transuranic radionuclides with half-life greater than five years	100[1]
Pu-241	3,500[1]
Cm-242	20,000[1]
Ra-226	100[1]

[1] Units are nanocuries per gram, to convert to becquerels (Bq) per gram multiply by 37, to convert from curies to gigabecquerels (GBq) multiply by 37. Specific approval of the department is required for disposal of these radionuclides if their concentration is greater than ten percent of the Table 1 value.

(4) **Classification determined by short-lived radionuclides.** If the waste does not contain any of the radionuclides listed in Table 1, classification shall be determined based on the concentrations shown in Table 2. If the radioactive waste does not contain any radionuclides listed in either Table 1 or 2, it is Class A.

(a) If the concentration does not exceed the value of Column 1, the waste is Class A.

(b) If the concentration exceeds the value in Column 1, but does not exceed the value in Column 2, the waste is Class B.

(c) If the concentration exceeds the value in Column 2, but does not exceed the value in Column 3, the waste is Class C.

(d) If the concentration exceeds the value in Column 3, the waste is not generally acceptable for near-surface disposal.

(e) For wastes containing mixtures of the radionuclides listed in Table 2, the total concentration shall be determined by the sum of fractions rule described in subsection (7) of this section.

Table 2

Radionuclide	Concentration, Curies/Cubic Meter Column 1	Column 2	Column 3
Total of all radionuclides with less than 5-year half-life	700	(*)	(*)
H-3	40	(*)	(*)
Co-60	700	(*)	(*)
Ni-63	3.5	70	700
Ni-63 in activated metal	35	700	7,000
Sr-90	0.04	150	7,000
Cs-137	1	44	4,600

(*) There are no limits established for these radionuclides in Class B or C wastes. Practical consideration such as the effects of external radiation and internal heat generation on transportation, handling, and disposal will limit the concentrations for these wastes. These wastes shall be Class B unless the concentrations of other radionuclides in Table 2 determine the waste to be Class C independent of these radionuclides. Specific approval of the department is required prior to packaging of Class B tritium waste.

(5) **Classification determined by both long-lived and short-lived radionuclides.** If the waste contains a mixture of radionuclides, some of which are listed in Table 1, and some of which are listed in Table 2, classification shall be determined as follows:

(a) If the concentration of a radionuclide listed in Table 1 is less than 0.1 times the value listed in Table 1, the class shall be that determined by the concentration of radionuclides listed in Table 2.

(b) If the concentration of a radionuclide listed in Table 1 exceeds 0.1 times the value listed in Table 1, the waste shall be Class C, provided the concentration of radionuclides listed in Table 2 does not exceed the value shown in Column 3 of Table 2.

(6) **Classification of waste with radionuclides other than those listed in Tables 1 and 2.** If the waste does not contain any radionuclides listed in either Table 1 or 2, it is Class A.

(7) **The sum of fractions rule for mixtures of radionuclides.** For determining classification for waste that contains a mixture of radionuclides, it is necessary to determine the sum of fractions by dividing each radionuclide's concentration by the appropriate limit and adding the resulting values. The appropriate limits must all be taken from the same column of the same table. The sum of the fractions for the column must be less than or equal to 1.0 if the waste class is to be determined by that column. Example: A waste contains Sr-90 in a concentration of 50 Ci/m^3 and Cs-137 in a concentration of 22 Ci/m^3. Since the concentrations both exceed the values in Column 1, Table 2, they must be compared to Column 2 values. For Sr-90 fraction, 50/150 = 0.33; for Cs-137 fraction, 22/44 = 0.5; the sum of the fractions = 0.83. Since the sum is less than 1.0, the waste is Class B.

(8) **Determination of concentration in wastes.** The concentration of a radionuclide may be determined by indirect methods such as use of scaling factors which relate to the inferred concentration of one radionuclide to another that is measured, or radionuclide material accountability, if there is reasonable assurance that the indirect methods can be corre-

lated with actual measurement. The concentration of a radionuclide may be averaged over the volume of the waste, or weight of the waste if the units are expressed as nanocuries per gram.

[Statutory Authority: RCW 70.98.050 and 70.98.080. 91-16-109 (Order 187), § 246-249-040, filed 8/7/91, effective 9/7/91. Statutory Authority: RCW 43.70.040. 91-02-049 (Order 121), recodified as § 246-249-040, filed 12/27/90, effective 1/31/91. Statutory Authority: RCW 70.98.080. 87-01-031 (Order 2450), § 402-62-050, filed 12/11/86.]

WAC 246-249-050 Acceptable radioactive waste forms and packaging. (1) Packaging.

(a) Wastes shall be packaged in conformance with the conditions of the license issued to the site operator to which the waste will be shipped. Where the conditions of the site license are more restrictive than the provisions of these regulations, the site license condition shall govern. As a minimum, radioactive waste must be packaged in such a manner that waste containers received at the facility do not show:

(i) Significant deformation;

(ii) Loss or dispersal of contents;

(iii) An increase in the external radiation levels recorded on the manifest, within instrument tolerances; or

(iv) Significant containment degradation due to rust or other chemical actions.

(b) Wastes shall not be packaged for disposal in cardboard or fiberboard. Wood boxes are prohibited after February 28, 1987.

(c) A process control program shall be used which validates the following:

(i) Liquid waste shall be packaged in sufficient approved absorbent material to absorb twice the volume of the liquid, solidified using an approved solidification agent, or stabilized using an approved stabilization agent.

(ii) Solid wastes containing liquid shall contain as little free-standing and noncorrosive liquid as is reasonably achievable, but in no case shall the liquid exceed one percent of the volume.

(d) Waste shall not be readily capable of detonation or of explosive decomposition or reaction at normal pressures and temperatures, or of explosive reaction with water.

(e) Waste shall not contain, or be capable of generating quantities of toxic gases, vapors, or fumes harmful to persons transporting, handling, or disposing of the waste. This does not apply to radioactive gaseous waste packaged in accordance with (g) of this subsection.

(f) Pyrophoric materials contained in wastes shall be treated, prepared, and packaged to be nonflammable.

(g) Waste in gaseous form must be packaged at a pressure that does not exceed 1.5 atmospheres at 20°C. Total activity shall not exceed 100 curies (3.7×10^{12} Bqs) per container. Class A gaseous waste shall be contained within United States Department of Transportation specification cylinders. Specific approval of the department is required if the gaseous waste is Class B or C.

(h) Wastes containing hazardous, biological, pathogenic, or infectious material shall be treated to reduce the maximum extent practicable the potential hazard from the nonradiological materials. Wastes subject to regulation under Resource Conservation and Recovery Act (RCRA) are not allowed at the disposal site.

(i) Radioactive consumer products, the use and disposal of which is exempt from licensing control, may be received without regard to concentration limits of WAC 246-249-040 Table 2 provided the entire unit is received and is packaged with sufficient sorbent material so as to preclude breakage and rupture of its contents. This subsection allows the disposal of such consumer products as intact household or industrial smoke detector units containing Americium-241 foils and radium or radioactive materials incorporated into self-luminous devices and electron tubes.

(2) The following requirements are intended to provide stability of the waste. Stability is intended to ensure that the waste does not degrade and affect overall stability of the site through slumping, collapse, or other failure of the disposal unit and thereby lead to water infiltration. Stability is also a factor in limiting exposure to an inadvertent intruder, since it provides a recognizable and nondispersible waste form.

(a) Classes B, C, and A stable waste shall have structural stability. A structurally stable waste form will generally maintain its physical dimensions and its form, under the expected disposal conditions such as weight of overburden and compaction equipment, the presence of moisture, and microbial activity, and internal factors such as radiation effects and chemical changes. Structural stability can be provided by the waste form itself, processing the waste to a stable form, or placing the waste in a disposal container or structure that provides stability after disposal.

(b) Notwithstanding the provisions in subsection (1)(c) and (d) of this section, liquid waste, or waste containing liquid, shall be converted into a form that contains as little free-standing and noncorrosive liquid as is reasonably achievable, but in no case shall the liquid exceed one percent of the volume of the waste when the waste is in a disposal container designed to ensure stability, or 0.5 percent of the volume of the waste for waste processed to a stable form.

(c) Void spaces within the radioactive waste and between the waste and its package shall be reduced to the extent practicable. Unless specifically approved by the department, void spaces in Class A stable, Class B, and Class C waste packages shall be less than 15 percent of the total volume of the disposal package, provided the disposal package is not a high integrity container nor contains activated metals that are too large to put into high integrity containers. For Class B and Class C waste packages containing activated metals, voids shall be reduced to the extent practicable, and shall be demonstrated to be structurally stable by any of the methods discussed in (a) of this subsection.

[Statutory Authority: RCW 70.98.050 and 70.98.080. 91-16-109 (Order 187), § 246-249-050, filed 8/7/91, effective 9/7/91. Statutory Authority: RCW 43.70.040. 91-02-049 (Order 121), recodified as § 246-249-050, filed 12/27/90, effective 1/31/91. Statutory Authority: RCW 70.98.080. 87-01-031 (Order 2450), § 402-62-060, filed 12/11/86.]

WAC 246-249-060 Labeling. Each package of waste must be clearly labeled to identify whether it is Class A waste, Class B waste, or Class C waste in accordance with WAC 246-249-040. This marking is in addition to any transportation markings or labeling required by the United States Nuclear Regulatory Commission or the United States Department of Transportation and shall consist of lettering one-half inch high or greater in a durable contrasting color with the

background surrounding the lettering. The classification marking shall be visible on the same side as the radioactive marking or label and in close proximity (within six inches). Waste packages marked "Radioactive," "Limited Quantity" or "Radioactive LSA" need only one classification marking whereas waste packages labeled White I, Yellow II, or Yellow III shall have classification markings in close proximity (within six inches) to each label.

[Statutory Authority: RCW 70.98.050 and 70.98.080. 91-16-109 (Order 187), § 246-249-060, filed 8/7/91, effective 9/7/91. Statutory Authority: RCW 43.70.040. 91-02-049 (Order 121), recodified as § 246-249-060, filed 12/27/90, effective 1/31/91. Statutory Authority: RCW 70.98.080. 87-01-031 (Order 2450), § 402-62-070, filed 12/11/86.]

WAC 246-249-070 Variances. It is inevitable that a small portion of wastes cannot be treated to fully comply with the waste form requirements of this chapter consistent with the ALARA philosophy of chapter 246-220 WAC. A waste disposal site operator may apply to the department for a variance provided:

(1) The variance requested is not for a continuing process or waste stream;

(2) An equivalent or greater degree of protection is provided by the proposed alternative; and

(3) All reasonable methods of complying with the existing requirement have been considered.

[Statutory Authority: RCW 70.98.050 and 70.98.080. 91-16-109 (Order 187), § 246-249-070, filed 8/7/91, effective 9/7/91. Statutory Authority: RCW 43.70.040. 91-02-049 (Order 121), recodified as § 246-249-070, filed 12/27/90, effective 1/31/91. Statutory Authority: RCW 70.98.080. 87-01-031 (Order 2450), § 402-62-080, filed 12/11/86.]

WAC 246-249-080 Naturally occurring and accelerator produced radioactive material (NARM), excluding source material. (1) In addition to requirements for a disposal site use permit contained in WAC 246-249-020, single generators of naturally occurring or accelerator produced radioactive material shall obtain the specific approval of the department prior to offering wastes for disposal.

(2) Applications for specific departmental approval must be submitted to the department for volumes greater than one thousand cubic feet of diffuse NARM, and must describe:

(a) The chemical processes which produce or have produced the waste;

(b) The volume of waste to be disposed; and

(c) The radionuclides in the waste.

(3) A request for specific approval may be approved if the department finds the material is:

(a) In conformance with conditions of all licenses and permits issued to the disposal site operator; and

(b) Consistent with protection of the public health, safety and environment.

(4) Diffuse naturally occurring and accelerator produced radioactive material, excluding source material, shall be limited to a total site volume of no more than one hundred thousand cubic feet per calendar year. This annual disposal limit does not apply to:

(a) Accelerator produced radioactive material excluding decommissioning waste; and

(b) Discrete sealed sources. For purposes of this section, sealed sources means any device containing naturally occurring radioactive material or accelerator produced radioactive material to be used as a source of radiation which has been constructed in such a manner as to prevent the escape of any radioactive material.

(5) Rollover provision. For a given calendar year, the site licensee may apply to the department for an increase in the site volume limit not to exceed the cumulative rollover volume from previous years. The licensee must submit an application to the department describing the request and addressing the possible impacts. The department may approve the application if it finds that disposal of rollover volumes in excess of one hundred thousand cubic feet per year is appropriate based on the real or potential impacts to the public health, safety and environment.

(6) Emergency provision. If the annual total site volume limit has been met and an emergency situation occurs, single generators of diffuse NARM may seek emergency approval from the secretary to dispose of waste in excess of volume limitations. The secretary may approve emergency disposal if he or she finds that an emergency exists based upon the circumstances described by the applicant, the real or potential impact on the public health and safety as determined by the department and that approval of such additional disposal is consistent with protecting the public health and safety of the citizens of the state of Washington.

(7) The department shall review this section, every five years, beginning five years from the rule's effective date.

[Statutory Authority: RCW 70.98.050. 05-21-128, 05-23-113 and 06-01-105, § 246-249-080, filed 10/19/05, 11/18/05 and 12/21/05, effective 8/15/06. Statutory Authority: Chapter 70.98 RCW. 95-13-094, § 246-249-080, filed 6/21/95, effective 7/22/95. Statutory Authority: RCW 70.98.050 and 70.98.080. 91-16-109 (Order 187), § 246-249-080, filed 8/7/91, effective 9/7/91. Statutory Authority: RCW 43.70.040. 91-02-049 (Order 121), recodified as § 246-249-080, filed 12/27/90, effective 1/31/91. Statutory Authority: RCW 70.98.080. 87-01-031 (Order 2450), § 402-62-090, filed 12/11/86.]

WAC 246-249-090 Transfer for disposal and manifests. The requirements of this section are designed to control transfers of radioactive waste by any waste generator, waste collector, or waste processor licensee who ships radioactive waste either directly, or indirectly through a waste collector or waste processor, to a licensed low-level waste land disposal facility; establish a manifest tracking system; and supplement existing requirements concerning transfers and recordkeeping for those wastes.

(1) Effective March 1, 1998, each shipment of radioactive waste intended for disposal at a licensed land disposal facility in the state of Washington must be accompanied by a uniform low-level radioactive waste shipment manifest.

(2) Any licensee shipping radioactive waste intended for ultimate disposal at a licensed land disposal facility must document the information required on NRC's Uniform Low-Level Radioactive Waste Manifest and transfer this recorded manifest information to the intended consignee in accordance with this section.

(a) Each shipment manifest must include a certification by the waste generator as specified in this section.

(b) Each person involved in the transfer for disposal and disposal of waste, including the waste generator, waste collector, waste processor, and disposal facility operator, shall comply with the requirements specified in this section.

(c) When recording information on shipment manifests, information must be recorded in the International System of Units (SI) or in SI and units of curie, rad, rem, including multiples and subdivisions.

(3) A waste generator, collector, or processor who transports, or offers for transportation, radioactive waste intended for ultimate disposal at a licensed low-level radioactive waste land disposal facility must prepare a manifest reflecting information requested on applicable NRC Forms 540 (Uniform Low-Level Radioactive Waste Manifest (Shipping Paper)) and 541 (Uniform Low-Level Radioactive Waste Manifest (Container and Waste Description)) and, if necessary, on an applicable NRC Form 542 (Uniform Low-Level Radioactive Waste Manifest (Manifest Index and Regional Compact Tabulation)). NRC Forms 540 and 540A must be completed and must physically accompany the pertinent low-level waste shipment. Upon agreement between shipper and consignee, NRC Forms 541 and 541A and 542 and 542A may be completed, transmitted, and stored in electronic media with the capability for producing legible, accurate, and complete records on the respective forms. Licensees are not required by the department to comply with the manifesting requirements of this section when they ship:

(a) Radioactive waste for processing and expect its return (i.e., for storage under their license) prior to disposal at a licensed land disposal facility;

(b) Radioactive waste that is being returned to the licensee who is the "waste generator" or "generator," as defined in this part; or

(c) Radioactively contaminated material to a "waste processor" that becomes the processor's "residual waste."

For guidance in completing these forms, refer to the instructions that accompany the forms. Copies of manifests required by this section may be legible carbon copies, photocopies, or computer printouts that reproduce the data in the format of the uniform manifest.

This section includes information requirements of the U.S. Department of Transportation, as codified in 49 CFR Part 172. Information on hazardous, medical, or other waste, required to meet Environmental Protection Agency regulations, as codified in 40 CFR Parts 259, 261 or elsewhere, is not addressed in this section, and must be provided on the required EPA forms. However, the required EPA forms must accompany the Uniform Low-Level Radioactive Waste Manifest required by this section.

(4) Information requirements.

(a) General information.

The shipper of the radioactive waste, shall provide the following information on the uniform manifest:

(i) The name, facility address, and telephone number of the licensee shipping the waste;

(ii) An explicit declaration indicating whether the shipper is acting as a waste generator, collector, processor, or a combination of these identifiers for purposes of the manifested shipment; and

(iii) The name, address, and telephone number, or the name and EPA identification number for the carrier transporting the waste.

(b) Shipment information.

The shipper of the radioactive waste shall provide the following information regarding the waste shipment on the uniform manifest:

(i) The date of the waste shipment;

(ii) The total number of packages/disposal containers;

(iii) The total disposal volume and disposal weight in the shipment;

(iv) The total radionuclide activity in the shipment;

(v) The activity of each of the radionuclides H-3, C-14, Tc-99, and I-129 contained in the shipment; and

(vi) The total masses of U-233, U-235, and plutonium in special nuclear material, and the total mass of uranium and thorium in source material.

(c) Disposal container and waste information.

The shipper of the radioactive waste shall provide the following information on the uniform manifest regarding the waste and each disposal container of waste in the shipment:

(i) An alphabetic or numeric identification that uniquely identifies each disposal container in the shipment;

(ii) A physical description of the disposal container, including the manufacturer and model of any high integrity container;

(iii) The volume displaced by the disposal container;

(iv) The gross weight of the disposal container, including the waste;

(v) For waste consigned to a disposal facility, the maximum radiation level at the surface of each disposal container;

(vi) A physical and chemical description of the waste;

(vii) The total weight percentage of chelating agent for any waste containing more than 0.1% chelating agent by weight, plus the identity of the principal chelating agent;

(viii) The approximate volume of waste within a container;

(ix) The sorbing, stabilization, or solidification media, if any, and the identity of the solidification or stabilization media vendor and brand name;

(x) The identities and activities of individual radionuclides contained in each container, the masses of U-233, U-235, and plutonium in special nuclear material, and the masses of uranium and thorium in source material. For discrete waste types (i.e., activated materials, contaminated equipment, mechanical filters, sealed source/devices, and wastes in solidification/stabilization media), the identities and activities of individual radionuclides associated with or contained on these waste types within a disposal container shall be reported;

(xi) The total radioactivity within each container; and

(xii) For wastes consigned to a disposal facility, the classification of the waste under this chapter. The shipper must identify the waste if it does not meet the structural stability requirements in this chapter.

(d) Uncontainerized waste information.

The shipper of the radioactive waste shall provide the following information on the uniform manifest regarding a waste shipment delivered without a disposal container:

(i) The approximate volume and weight of the waste;

(ii) A physical and chemical description of the waste;

(iii) If the chelating agent exceeds 0.1% by weight, the total weight percentage of chelating agent plus the identity of the principal chelating agent;

(iv) For waste consigned to a disposal facility, the classification of the waste under this chapter. The shipper must identify the waste if it does not meet the structural stability requirements in this chapter;

(v) The identities and activities of individual radionuclides contained in the waste, the masses of U-233, U-235, and plutonium in special nuclear material, and the masses of uranium and thorium in source material; and

(vi) For wastes consigned to a disposal facility, the maximum radiation levels at the surface of the waste.

(e) Multigenerator disposal container information.

This subsection applies to disposal containers enclosing mixtures of waste originating from different generators. (Note: The origin of the radioactive waste resulting from a processor's activities may be attributable to one or more "generators," including "waste generators." It also applies to mixtures of wastes shipped in an uncontainerized form, for which portions of the mixture within the shipment originate from different generators.)

(i) For homogeneous mixtures of waste, such as incinerator ash, provide waste description applicable to the mixture and the volume of the waste attributed to each generator.

(ii) For heterogeneous mixtures of waste, such as the combined products from a large compactor, identify each generator contributing waste to the disposal container, and, for discrete waste types (i.e., activated materials, contaminated equipment, mechanical filters, sealed source/devices, and wastes in solidification/stabilization media), the identities and activities of individual radionuclides contained on these waste types within the disposal container. For each generator, provide the following:

(A) The volume of waste within the disposal container;

(B) A physical and chemical description of the waste, including the stabilization or solidification agent, if any;

(C) The total weight percentage of chelating agents for any disposal container containing more than 0.1% chelating agent by weight, plus the identity of the principal chelating agent;

(D) The sorbing, solidification, or stabilization media, if any, and the identity of the stabilization media vendor and brand name, if the media is claimed to meet stability requirements in WAC 246-249-050(2); and

(E) Radionuclide identities and activities contained in the waste, the masses of U-233, U-235, and plutonium in special nuclear material, and the masses of uranium and thorium in source material if contained in the waste.

(5) Certification.

An authorized representative of the waste generator, processor, or collector shall certify by signing and dating the shipment manifest that the transported materials are properly classified, described, packaged, marked, and labeled and are in proper condition for transportation according to the applicable regulations of the Department of Transportation, the U.S. Nuclear Regulatory Commission, and the department. A collector in signing the certification is certifying that nothing has been done to the collected waste which would invalidate the waste generator's certification.

(6) Control and tracking.

(a) Any licensee who transfers radioactive waste to a land disposal facility or a licensed waste collector shall comply with the requirements in (a)(i) through (ix) of this subsection. Any licensee who transfers waste to a licensed waste processor for waste treatment or repackaging shall comply with the requirements of (a)(iv) through (ix) of this section. A licensee shall:

(i) Prepare all wastes so that the waste is classified according to WAC 246-249-040 and meets the waste characteristics requirements in WAC 246-249-050;

(ii) Label each disposal container (or transport package if potential radiation hazards preclude labeling of the individual disposal container) of waste to identify whether it is Class A waste, Class B waste, Class C waste, or greater than Class C waste, in accordance with WAC 246-249-040;

(iii) Conduct a quality assurance program to assure compliance with WAC 246-249-040 and 246-249-050 (the program must include management evaluation of audits);

(iv) Prepare the NRC Uniform Low-Level Radioactive Waste Manifest as required by this section;

(v) Forward a copy or electronically transfer the Uniform Low-Level Radioactive Waste Manifest to the intended consignee so that either receipt of the manifest precedes the waste shipment or the manifest is delivered to the consignee with the waste at the time the waste is transferred to the consignee. Using both methods is also acceptable;

(vi) Include NRC Form 540 (and NRC Form 540A, if required) with the shipment regardless of the option chosen in (a)(v) of this subsection;

(vii) Receive acknowledgement of the receipt of the shipment in the form of a signed copy of NRC Form 540;

(viii) Retain a copy of, or electronically store the Uniform Low-Level Radioactive Waste Manifest and documentation of acknowledgement of receipt as the record of transfer of licensed material as required by these regulations; and

(ix) For any shipments or any part of a shipment for which acknowledgement of receipt has not been received within the times set forth in this section, conduct an investigation in accordance with (e) of this subsection.

(b) Any waste collector licensee who handles only prepackaged waste shall:

(i) Acknowledge receipt of the waste from the shipper within one week of receipt by returning a signed copy of NRC Form 540;

(ii) Prepare a new manifest to reflect consolidated shipments that meet the requirements of this section. The waste collector shall ensure that, for each container of waste in the shipment, the manifest identifies the generator of that container of waste;

(iii) Forward a copy or electronically transfer the Uniform Low-Level Radioactive Waste Manifest to the intended consignee so that either receipt of the manifest precedes the waste shipment, or the manifest is delivered to the consignee with the waste at the time the waste is transferred to the consignee. Using both methods is also acceptable;

(iv) Include NRC Form 540 (and NRC Form 540A, if required) with the shipment regardless of the option chosen in (b)(iii) of this subsection;

(v) Receive acknowledgement of the receipt of the shipment in the form of a signed copy of NRC Form 540;

(vi) Retain a copy of or electronically store the Uniform Low-Level Radioactive Waste Manifest and documentation of acknowledgement of receipt as the record of transfer of licensed material as required by these regulations;

(vii) For any shipments or any part of a shipment for which acknowledgement of receipt has not been received within the times set forth in this section, conduct an investigation in accordance with this section; and

(viii) Notify the shipper and the department when any shipment, or part of a shipment, has not arrived within sixty days after receipt of an advance manifest, unless notified by the shipper that the shipment has been canceled.

(c) Any licensed waste processor who treats or repackages waste shall:

(i) Acknowledge receipt of the waste from the shipper within one week of receipt by returning a signed copy of NRC Form 540;

(ii) Prepare a new manifest that meets the requirements of this section. Preparation of the new manifest reflects that the processor is responsible for meeting these requirements. For each container of waste in the shipment, the manifest shall identify the waste generators, the preprocessed waste volume, and the other information as required in subsection (4)(e) of this section;

(iii) Prepare all wastes so that the waste is classified according to WAC 246-249-040 and meets the waste characteristics requirements in WAC 246-249-050;

(iv) Label each package of waste to identify whether it is Class A waste, Class B waste, or Class C waste, in accordance with WAC 246-249-040 and 246-249-060;

(v) Conduct a quality assurance program to assure compliance with WAC 246-249-040 and 246-249-050 (the program shall include management evaluation of audits);

(vi) Forward a copy or electronically transfer the Uniform Low-Level Radioactive Waste Manifest to the intended consignee so that either receipt of the manifest precedes the waste shipment, or the manifest is delivered to the consignee with the waste at the time the waste is transferred to the consignee. Using both methods is also acceptable;

(vii) Include NRC Form 540 (and NRC Form 540A, if required) with the shipment regardless of the option chosen in (c)(vi) of this subsection;

(viii) Receive acknowledgement of the receipt of the shipment in the form of a signed copy of NRC Form 540;

(ix) Retain a copy of or electronically store the Uniform Low-Level Radioactive Waste Manifest and documentation of acknowledgement of receipt as the record of transfer of licensed material as required by these regulations;

(x) For any shipment or any part of a shipment for which acknowledgement of receipt has not been received within the times set forth in this section, conduct an investigation in accordance with (e) of this subsection; and

(xi) Notify the shipper and the department when any shipment, or part of a shipment, has not arrived within sixty days after receipt of an advance manifest, unless notified by the shipper that the shipment has been canceled.

(d) The land disposal facility operator shall:

(i) Acknowledge receipt of the waste within one week of receipt by returning, as a minimum, a signed copy of NRC Form 540 to the shipper. The shipper to be notified is the licensee who last possessed the waste and transferred the waste to the operator. If any discrepancy exists between materials listed on the Uniform Low-Level Radioactive Waste Manifest and materials received, copies or electronic transfer of the affected forms must be returned indicating the discrepancy;

(ii) Maintain copies of all completed manifests and electronically store the information required by WAC 246-250-600(8) until the license is terminated; and

(iii) Notify the shipper and the department when any shipment, or part of a shipment, has not arrived within sixty days after receipt of an advance manifest, unless notified by the shipper that the shipment has been canceled.

(e) If the shipper does not receive acknowledgement from the land disposal facility operator for any shipment or part of a shipment within the times set in this section, the shipper must:

(i) Investigate if the shipper has not received notification or receipt within twenty days after transfer; and

(ii) Trace the shipment or part of shipment and report the investigation to the department. Each licensee who conducts a trace investigation shall file a written report with the department within two weeks of completion of the investigation.

[Statutory Authority: RCW 70.98.050. 05-21-128, 05-23-113 and 06-01-105, § 246-249-090, filed 10/19/05, 11/18/05 and 12/21/05, effective 8/15/06. Statutory Authority: RCW 70.98.050 and 70.98.080. 98-09-117, § 246-249-090, filed 4/22/98, effective 5/23/98; 97-02-014, § 246-249-090, filed 12/20/96, effective 1/20/97; 91-16-109 (Order 187), § 246-249-090, filed 8/7/91, effective 9/7/91.]

Chapter 246-250 WAC

RADIOACTIVE WASTE—LICENSING LAND DISPOSAL

WAC

GENERAL PROVISIONS

246-250-001 Purpose and scope.
246-250-010 Definitions.
246-250-020 License required.
246-250-030 Content of application.
246-250-040 General information.
246-250-050 Specific technical information.
246-250-060 Technical analyses.
246-250-070 Institutional information.
246-250-080 Financial information.
246-250-090 Requirements for issuance of a license.
246-250-100 Conditions of licenses.
246-250-110 Application for renewal or closure.
246-250-120 Contents of application for site closure and stabilization.
246-250-130 Post-closure observation and maintenance.
246-250-140 Transfer of license.
246-250-150 Termination of license.
246-250-160 General requirement.
246-250-170 Protection of the general population from releases of radioactivity.
246-250-180 Protection of individuals from inadvertent intrusion.
246-250-190 Protection of individuals during operations.
246-250-200 Stability of the disposal site after closure.

TECHNICAL REQUIREMENTS FOR LAND DISPOSAL FACILITIES

246-250-300 Disposal site suitability requirements for land disposal.
246-250-320 Disposal site design for land disposal.
246-250-330 Land disposal facility operation and disposal site closure.
246-250-340 Environmental monitoring.
246-250-350 Alternative requirements for design and operations.
246-250-360 Institutional requirements.
246-250-370 Alternative requirements for waste classification and characteristics.

FINANCIAL ASSURANCES

246-250-500 Applicant qualifications and assurances.
246-250-520 Funding for disposal site closure and stabilization.
246-250-530 Financial assurances for institutional controls.

RECORDS, REPORTS, TESTS, AND INSPECTIONS

246-250-600 Maintenance of records, reports, and transfers.
246-250-620 Tests on land disposal facilities.

LAND DISPOSAL OF RADIOACTIVE WASTE

246-250-700 Agency inspections of land disposal facilities.

GENERAL PROVISIONS

WAC 246-250-001 Purpose and scope. (1) The regulations in this chapter establish procedures, criteria, and terms and conditions upon which the department issues licenses for land disposal of low-level radioactive wastes received from other persons. (Applicability of the requirements in this chapter to department licenses for waste disposal facilities in effect on the effective date of this regulation will be determined on a case-by-case basis and implemented through terms and conditions of the license or by orders issued by the department.) The requirements of this chapter are in addition to, and not in substitution for, other applicable requirements of these regulations or other state regulations.

(2) The regulations in this chapter do not apply to disposal of tailings or wastes produced by the extraction or concentration of uranium or thorium from any ore where the tailings or wastes result in quantities greater than 10,000 kilograms and containing more than 185 mega becquerels (five millicuries) of radium 226, or disposal of waste provided in WAC 246-221-070, 246-221-190, or 246-221-200.

(3) This chapter establishes procedural requirements and performance objectives applicable to any method of land disposal. It establishes specific technical requirements for near-surface disposal of radioactive waste which involves disposal in the uppermost portion of the earth, approximately 30 meters. Near-surface disposal includes disposal in engineered facilities which may be built totally or partially above-grade provided that such facilities have protective earthen covers. Near-surface disposal does not include disposal facilities which are partially or fully above-grade with no protective earthen cover, which are referred to as "above-ground disposal." Burial deeper than 30 meters may also be satisfactory. Technical requirements for alternative methods may be added in the future.

[Statutory Authority: RCW 70.98.050 and 70.98.080. 97-02-014, § 246-250-001, filed 12/20/96, effective 1/20/97. Statutory Authority: RCW 70.98.050. 94-01-073, § 246-250-001, filed 12/9/93, effective 1/9/94. Statutory Authority: RCW 70.98.050 and 70.98.080. 91-16-109 (Order 187), § 246-250-001, filed 8/7/91, effective 9/7/91. Statutory Authority: RCW 43.70.040. 91-02-049 (Order 121), recodified as § 246-250-001, filed 12/27/90, effective 1/31/91. Statutory Authority: RCW 70.98.080. 87-01-031 (Order 2450), § 402-61-010, filed 12/11/86.]

WAC 246-250-010 Definitions. As used in this chapter, the following definitions apply:

(1) "Active maintenance" means any significant activity needed during the period of institutional control to maintain a reasonable assurance that the performance objectives of WAC 246-250-170 and 246-250-180 are met. Such active maintenance includes ongoing activities such as the pumping and treatment of water from a disposal unit or one-time measures such as replacement of a disposal unit cover. Active maintenance does not include custodial activities such as repair of fencing, repair or replacement of monitoring equipment, revegetation, minor additions to soil cover, minor repair of disposal unit covers, and general disposal site upkeep such as mowing grass.

(2) "Buffer zone" means a portion of the disposal site that is controlled by the licensee or by the United States Department of Energy and that lies under the disposal units and between the disposal units and the boundary of the site.

(3) "Chelating agent" means amine polycarboxylic acids, hydroxy-carboxylic acids, gluconic acid, and polycarboxylic acids.

(4) "Commencement of construction" means any clearing of land, excavation, or other substantial action that would adversely affect the environment of a land disposal facility. The term does not mean disposal site exploration, necessary roads for disposal site exploration, borings to determine foundation conditions, or other preconstruction monitoring or testing to establish background information related to the suitability of the disposal site or the protection of environmental values.

(5) "Custodial agency" means an agency of the government designated to act on behalf of the government owner of the disposal site.

(6) "Disposal" means the isolation of wastes from the biosphere inhabited by man and his food chains by emplacement in a land disposal facility.

(7) "Disposal site" means that portion of a land disposal facility which is used for disposal of waste. It consists of disposal units and a buffer zone.

(8) "Disposal unit" means a discrete portion of the disposal site into which waste is placed for disposal. For near-surface disposal, the unit is usually a trench.

(9) "Engineered barrier" means a man-made structure or device that is intended to improve the land disposal facility's ability to meet the performance objectives in this chapter.

(10) "Explosive material" means any chemical compound, mixture, or device which produces a substantial instantaneous release of gas and heat spontaneously or by contact with sparks or flame.

(11) "Hazardous waste" means those wastes designated as hazardous by United States Environmental Protection Agency regulations in 40 CFR Part 261.

(12) "Hydrogeologic unit" means any soil or rock unit or zone which by virtue of its porosity or permeability, or lack thereof, has a distinct influence on the storage or movement of ground water.

(13) "Inadvertent intruder" means a person who might occupy the disposal site after closure and engage in normal activities, such as agriculture, dwelling construction, or other pursuits in which an individual might be unknowingly exposed to radiation from the waste.

(14) "Intruder barrier" means a sufficient depth of cover over the waste that inhibits contact with waste and helps to ensure that radiation exposures to an inadvertent intruder will meet the performance objectives set forth in this chapter, or engineered structures that provide equivalent protection to the inadvertent intruder.

(15) "Land disposal facility" means the land, buildings, and equipment which are intended to be used for the disposal of wastes into the subsurface of the land. For purposes of this chapter, a land disposal facility does not include a geologic repository.

(16) "Monitoring" means observing and making measurements to provide data to evaluate the performance and characteristics of the disposal site.

(17) "Near-surface disposal facility" means a land disposal facility in which waste is disposed within approximately the upper thirty meters of the earth's surface.

(18) "Pyrophoric liquid" means any liquid that ignites spontaneously in dry or moist air at or below 130°F (54.4°C).

(19) "Pyrophoric solid" means any solid material, other than one classed as an explosive, which under normal conditions, is liable to cause fires through friction, retained heat from manufacturing or processing, or which can be ignited readily and, when ignited, burns so vigorously and persistently as to create a serious transportation, handling, or disposal hazard. Included are spontaneously combustible and water-reactive materials.

(20) "Site closure and stabilization" means those actions that are taken upon completion of operations that prepare the disposal site for custodial care and that assure that the disposal site will remain stable and will not need ongoing active maintenance.

(21) "Stability" means structural stability.

(22) "Surveillance" means monitoring and observation of the disposal site for purposes of visual detection of need for maintenance, custodial care, evidence of intrusion, and compliance with other license and regulatory requirements.

(23) "Waste" means those low-level radioactive wastes that are acceptable for disposal in a land disposal facility. For the purposes of this definition, low-level waste has the same meaning as in the Low-Level Radioactive Waste Policy Amendments Act of 1985, Public Law 99-240, that is, radioactive waste not classified as high-level radioactive waste, spent nuclear fuel, or by-product material as defined in section 11 e.(2) of the Atomic Energy Act (uranium or thorium tailings and waste).

[Statutory Authority: RCW 70.98.050 and 70.98.080. 97-02-014, § 246-250-010, filed 12/20/96, effective 1/20/97; 91-16-109 (Order 187), § 246-250-010, filed 8/7/91, effective 9/7/91. Statutory Authority: RCW 43.70.-040. 91-02-049 (Order 121), recodified as § 246-250-010, filed 12/27/90, effective 1/31/91. Statutory Authority: RCW 70.98.080. 87-01-031 (Order 2450), § 402-61-020, filed 12/11/86.]

WAC 246-250-020 License required. (1) No person may receive, possess, or dispose of waste received from other persons at a land disposal facility unless authorized by a license issued by the department pursuant to this chapter, and chapter 246-235 WAC.

(2) Each person shall file an application with the department pursuant to chapter 246-235 WAC and obtain a license as provided in this chapter before commencement of construction of a land disposal facility. Failure to comply with this requirement may be grounds for denial of a license.

[Statutory Authority: RCW 70.98.050 and 70.98.080. 91-16-109 (Order 187), § 246-250-020, filed 8/7/91, effective 9/7/91. Statutory Authority: RCW 43.70.040. 91-02-049 (Order 121), recodified as § 246-250-020, filed 12/27/90, effective 1/31/91. Statutory Authority: RCW 70.98.080. 87-01-031 (Order 2450), § 402-61-030, filed 12/11/86.]

WAC 246-250-030 Content of application. In addition to the requirements set forth in chapter 246-235 WAC, an application to receive from others, possess, and dispose of wastes shall consist of general information, specific technical information, institutional information, and financial information as set forth in WAC 246-250-040 through 246-250-080.

[Statutory Authority: RCW 70.98.050 and 70.98.080. 91-16-109 (Order 187), § 246-250-030, filed 8/7/91, effective 9/7/91. Statutory Authority: RCW 43.70.040. 91-02-049 (Order 121), recodified as § 246-250-030, filed 12/27/90, effective 1/31/91. Statutory Authority: RCW 70.98.080. 87-01-031 (Order 2450), § 402-61-040, filed 12/11/86.]

WAC 246-250-040 General information. The general information shall include each of the following:

(1) Identity of the applicant including:

(a) The full name, address, telephone number, and description of the business or occupation of the applicant;

(b) If the applicant is a partnership, the name and address of each partner and the principal location where the partnership does business;

(c) If the applicant is a corporation or an unincorporated association, (i) the state where it is incorporated or organized and the principal location where it does business, and (ii) the names and addresses of its directors and principal officers; and

(d) If the applicant is acting as an agent or representative of another person in filing the application, all information required under this subsection must be supplied with respect to the other person.

(2) Qualifications of the applicant:

(a) The organizational structure of the applicant, both offsite and onsite, including a description of lines of authority and assignments of responsibilities, whether in the form of administrative directives, contract provisions, or otherwise;

(b) The technical qualifications, including training and experience, of the applicant and members of the applicant's staff to engage in the proposed activities. Minimum training and experience requirements for personnel filling key positions described in (a) of this subsection must be provided.

(c) A description of the applicant's personnel training program; and

(d) The plan to maintain an adequate complement of trained personnel to carry out waste receipt, handling, and disposal operations in a safe manner.

(3) A description of:

(a) The location of the proposed disposal site;

(b) The general character of the proposed activities;

(c) The types and quantities of waste to be received, possessed, and disposed of;

(d) Plans for use of the land disposal facility for purposes other than disposal of wastes; and

(e) The proposed facilities and equipment.

(4) Proposed schedules for construction, receipt of waste, and first emplacement of waste at the proposed land disposal facility.

[Statutory Authority: RCW 43.70.040. 91-02-049 (Order 121), recodified as § 246-250-040, filed 12/27/90, effective 1/31/91. Statutory Authority: RCW 70.98.080. 87-01-031 (Order 2450), § 402-61-050, filed 12/11/86.]

WAC 246-250-050 Specific technical information. The specific technical information shall include the following information needed for demonstration that the performance objectives and the applicable technical requirements of this chapter will be met. The specific technical information shall be in the form of an environmental report which the depart-

ment can use to independently evaluate the project under the provisions of the State Environmental Policy Act (SEPA):

(1) A description of the natural and demographic disposal site characteristics as determined by disposal site selection and characterization activities. The description shall include geologic, geochemical, geotechnical, hydrologic, ecologic, archaeologic, meteorologic, climatologic, and biotic features of the disposal site and vicinity.

(2) A description of the design features of the land disposal facility and the disposal units. For near-surface disposal, the description shall include those design features related to infiltration of water; integrity of covers for disposal units; structural stability of backfill, wastes, and covers; contact of wastes with standing water; disposal site drainage; disposal site closure and stabilization; elimination to the extent practicable of long-term disposal site maintenance; inadvertent intrusion; occupational exposures; disposal site monitoring; and adequacy of the size of the buffer zone for monitoring and potential mitigative measures.

(3) A description of the principal design criteria and their relationship to the performance objectives.

(4) A description of the design basis natural events or phenomena and their relationship to the principal design criteria.

(5) A description of codes and standards which the applicant has applied to the design and which will apply to construction of the land disposal facilities.

(6) A description of the construction and operation of the land disposal facility. The description shall include as a minimum the methods of construction of disposal units; waste emplacement; the procedures for and areas of waste segregation; types of intruder barriers; onsite traffic and drainage systems; survey control program; methods and areas of waste storage; and methods to control surface water and ground water access to the wastes. The description shall also include a description of the methods to be employed in the handling and disposal of wastes containing chelating agents or other nonradiological substances that might affect meeting the performance objectives of this chapter.

(7) A description of the disposal site closure plan, including those design features which are intended to facilitate disposal site closure and to eliminate the need for ongoing active maintenance.

(8) An identification of the known natural resources at the disposal site, whose exploitation could result in inadvertent intrusion into the wastes after removal of active institutional control.

(9) A description of the kind, amount, classification, and specifications of the radioactive material proposed to be received, possessed, and disposed of at the land disposal facility.

(10) A description of the quality assurance program tailored to low-level radioactive waste disposal, developed and applied by the applicant for the determination of natural disposal site characteristics and for quality assurance during the design, construction, operation, and closure of the land disposal facility and the receipt, handling, and emplacement of waste. Audits and managerial controls must be included.

(11) A description of the radiation safety program for control and monitoring of radioactive effluents to ensure compliance with the performance objective in WAC 246-250-170 and occupational radiation exposure to ensure compliance with the requirements of chapter 246-221 WAC and to control contamination of personnel, vehicles, equipment, buildings, and the disposal site. Both routine operations and accidents shall be addressed. The program description must include procedures, instrumentation, facilities, and equipment.

(12) A description of the environmental monitoring program to provide data to evaluate potential health and environmental impacts and the plan for taking corrective measures if migration is indicated.

(13) A description of the administrative procedures that the applicant will apply to control activities at the land disposal facility.

(14) A description of the facility electronic recordkeeping system.

[Statutory Authority: RCW 70.98.050 and 70.98.080. 97-02-014, § 246-250-050, filed 12/20/96, effective 1/20/97; 91-16-109 (Order 187), § 246-250-050, filed 8/7/91, effective 9/7/91. Statutory Authority: RCW 43.70.-040. 91-02-049 (Order 121), recodified as § 246-250-050, filed 12/27/90, effective 1/31/91. Statutory Authority: RCW 70.98.080. 87-01-031 (Order 2450), § 402-61-060, filed 12/11/86.]

WAC 246-250-060 Technical analyses. The specific technical information shall also include the following analyses needed to demonstrate that the performance objectives of this chapter will be met:

(1) Pathways analyzed in demonstrating protection of the general population from releases of radioactivity shall include air, soil, ground water, surface water, plant uptake, and exhumation by burrowing animals. The analyses shall clearly identify and differentiate between the roles performed by the natural disposal site characteristics and design features in isolating and segregating the wastes. The analyses shall clearly demonstrate that there is reasonable assurance that the exposures to humans from the release of radioactivity will not exceed the limits set forth in WAC 246-250-170.

(2) Analyses of the protection of individuals from inadvertent intrusion shall include demonstration that there is reasonable assurance the waste classification and segregation requirements will be met and that adequate barriers to inadvertent intrusion will be provided.

(3) Analyses of the protection of individuals during operations shall include assessments of expected exposures due to routine operations and likely accidents during handling, storage, and disposal of waste. The analyses shall provide reasonable assurance that exposures will be controlled to meet the requirements of chapter 246-221 WAC.

(4) Analyses of the long-term stability of the disposal site and the need for ongoing active maintenance after closure shall be based upon analyses of active natural processes such as erosion, mass wasting, slope failure, settlement of wastes and backfill, infiltration through covers over disposal areas and adjacent soils, and surface drainage of the disposal site. The analyses shall provide reasonable assurance that there will not be a need for ongoing active maintenance of the disposal site following closure.

[Statutory Authority: RCW 70.98.050 and 70.98.080. 91-16-109 (Order 187), § 246-250-060, filed 8/7/91, effective 9/7/91. Statutory Authority: RCW 43.70.040. 91-02-049 (Order 121), recodified as § 246-250-060, filed 12/27/90, effective 1/31/91. Statutory Authority: RCW 70.98.080. 87-01-031 (Order 2450), § 402-61-070, filed 12/11/86.]

WAC 246-250-070 Institutional information. The institutional information submitted by the applicant shall include:

(1) A certification by the federal or state agency which owns the disposal site that the federal or state agency is prepared to accept transfer of the license when the provisions of WAC 246-250-140 are met and will assume responsibility for institutional control after site closure and post-closure observation and maintenance.

(2) Where the proposed disposal site is on land not owned by the federal or state government, the applicant shall submit evidence that arrangements have been made for assumption of ownership in fee by the federal or state agency before the department issues a license.

[Statutory Authority: RCW 70.98.050 and 70.98.080. 91-16-109 (Order 187), § 246-250-070, filed 8/7/91, effective 9/7/91. Statutory Authority: RCW 43.70.040. 91-02-049 (Order 121), recodified as § 246-250-070, filed 12/27/90, effective 1/31/91. Statutory Authority: RCW 70.98.080. 87-01-031 (Order 2450), § 402-61-080, filed 12/11/86.]

WAC 246-250-080 Financial information. The financial information shall be sufficient to demonstrate that the financial qualifications of the applicant are adequate to carry out the activities for which the license is sought and meet other financial assurance requirements of this chapter.

[Statutory Authority: RCW 43.70.040. 91-02-049 (Order 121), recodified as § 246-250-080, filed 12/27/90, effective 1/31/91. Statutory Authority: RCW 70.98.080. 87-01-031 (Order 2450), § 402-61-090, filed 12/11/86.]

WAC 246-250-090 Requirements for issuance of a license. A license for the receipt, possession, and disposal of waste containing or contaminated with radioactive material will be issued by the department upon finding that:

(1) The issuance of the license will not constitute an unreasonable risk to the health and safety of the public;

(2) The applicant is qualified by reason of training and experience to carry out the disposal operations requested in a manner that protects health and minimizes danger to life or property;

(3) The applicant's proposed disposal site, disposal design, land disposal facility operations, including equipment, facilities, and procedures, disposal site closure, and post-closure institutional control are adequate to protect the public health and safety in that they provide reasonable assurance that the general population will be protected from releases of radioactivity as specified in the performance objective in WAC 246-250-170.

(4) The applicant's proposed disposal site, disposal site design, land disposal facility operations (including equipment, facilities, and procedures), disposal site closure, and post-closure institutional control are adequate to protect the public health and safety in that they will provide reasonable assurance that individual inadvertent intruders are protected in accordance with the performance objective in WAC 246-250-180.

(5) The applicant's proposed land disposal facility operations (including equipment, facilities, and procedures), are adequate to protect the public health and safety in that they will provide reasonable assurance that the standards for radiation protection set out in chapter 246-221 WAC will be met;

(6) The applicant's proposed disposal site, disposal site design, land disposal facility operations, disposal site closure, and post-closure institutional control are adequate to protect the public health and safety in that they will provide reasonable assurance that long-term stability of the disposed waste and the disposal site will be achieved and will eliminate to the extent practicable the need for ongoing active maintenance of the disposal site following closure;

(7) The applicant's demonstration provides reasonable assurance that the applicable technical requirements of this chapter will be met;

(8) The applicant's proposal for institutional control provides reasonable assurance that such control will be provided for the length of time found necessary to ensure the findings in subsections (3) through (6) of this section and that the institutional control meets the requirements of WAC 246-250-360.

(9) The financial or surety arrangements meet the requirements of this chapter.

(10) The provisions of the State Environmental Policy Act have been met.

[Statutory Authority: RCW 70.98.050 and 70.98.080. 91-16-109 (Order 187), § 246-250-090, filed 8/7/91, effective 9/7/91. Statutory Authority: RCW 43.70.040. 91-02-049 (Order 121), recodified as § 246-250-090, filed 12/27/90, effective 1/31/91. Statutory Authority: RCW 70.98.080. 87-01-031 (Order 2450), § 402-61-100, filed 12/11/86.]

WAC 246-250-100 Conditions of licenses. (1) A license issued under this chapter, or any right thereunder, may be transferred, assigned, or in any manner disposed of, either voluntarily or involuntarily, directly or indirectly, through transfer of control of the license to any person, only if the department finds, after securing full information, that the transfer is in accordance with the provisions of the act and gives its consent in writing in the form of a license amendment.

(2) The licensee shall submit written statements under oath upon request of the department, at any time before termination of the license, to enable the department to determine whether the license should be modified, suspended, or revoked.

(3) The license will be terminated only on the full implementation of the final closure plan as approved by the department, including post-closure observation and maintenance.

(4) The licensee shall be subject to the provisions of the act, now or hereafter in effect, and to all rules, regulations, and orders of the department. The terms and conditions of the license are subject to amendment, revision, or modification, by reason of amendments to, or by reason of rules, regulations, and orders issued in accordance with the terms of the act.

(5) Each person licensed by the department pursuant to the regulations in this chapter shall confine possession and use of materials to the locations and purposes authorized in the license.

(6) The licensee shall not dispose of waste until the department has inspected the land disposal facility and has found it to be in conformance with the description, design, and construction described in the application for a license.

(7) The department may incorporate in any license at the time of issuance, or thereafter, by appropriate rule, regulation, or order, additional requirements and conditions with

respect to the licensee's receipt, possession, and disposal of waste as it deems appropriate or necessary in order to:

(a) Protect health or to minimize danger to life or property;

(b) Require reports and the keeping of records, and to provide for inspections of activities under the license that may be necessary or appropriate to effectuate the purposes of the act and regulations thereunder.

(8) The authority to dispose of wastes expires on the date stated in the license. Any expiration date on a license applies only to the above ground activities and to the authority to dispose of waste. Failure to renew the license shall not relieve the licensee of responsibility for implementing site closure, post-closure observation, and transfer of the license to the site owner.

[Statutory Authority: RCW 43.70.040. 91-02-049 (Order 121), recodified as § 246-250-100, filed 12/27/90, effective 1/31/91. Statutory Authority: RCW 70.98.080. 87-01-031 (Order 2450), § 402-61-110, filed 12/11/86.]

WAC 246-250-110 Application for renewal or closure. (1) An application for renewal must be filed at least ninety days prior to license expiration.

(2) An application for closure under WAC 246-250-120 must be filed at least one year prior to proposed closure.

(3) Applications for renewal of a license must be filed in accordance with WAC 246-250-030 through 246-250-080. Applications for closure must be filed in accordance with WAC 246-250-120. Information contained in previous applications, statements, or reports filed with the department under the license may be incorporated by reference if the references are clear, specific, and remain pertinent.

(4) In any case in which a licensee has filed an application in proper form for renewal of a license, the license shall not expire until the department has taken final action on the application for renewal.

(5) In determining whether a license will be renewed, the department will apply the criteria set forth in WAC 246-250-090.

[Statutory Authority: RCW 70.98.050 and 70.98.080. 91-16-109 (Order 187), § 246-250-110, filed 8/7/91, effective 9/7/91. Statutory Authority: RCW 43.70.040. 91-02-049 (Order 121), recodified as § 246-250-110, filed 12/27/90, effective 1/31/91. Statutory Authority: RCW 70.98.080. 87-01-031 (Order 2450), § 402-61-120, filed 12/11/86.]

WAC 246-250-120 Contents of application for site closure and stabilization. (1) Prior to final closure of the disposal site, or as otherwise directed by the department, the applicant shall submit an application to amend the license for closure. This closure application shall include a final revision and specific details of the disposal site closure plan included as part of the license application submitted under WAC 246-250-050(7) that includes each of the following:

(a) Any additional geologic, hydrologic, or other data pertinent to the long-term containment of emplaced wastes obtained during the operational period.

(b) The results of tests, experiments, or any other analyses relating to backfill of excavated areas, closure and sealing, waste migration and interaction with emplacement media, or any other tests, experiments, or analysis pertinent to the long-term containment of emplaced waste within the disposal site.

(c) Any proposed revision of plans for:

(i) Decontamination and/or dismantlement of surface facilities;

(ii) Backfilling of excavated areas; or

(iii) Stabilization of the disposal site for post-closure care.

(d) Any significant new information regarding the environmental impact of closure activities and long-term performance of the disposal site.

(2) Upon review and consideration of an application to amend the license for closure submitted in accordance with subsection (1) of this section, the department shall issue an amendment authorizing closure if there is reasonable assurance that the long-term performance objectives of this chapter will be met.

[Statutory Authority: RCW 70.98.050 and 70.98.080. 91-16-109 (Order 187), § 246-250-120, filed 8/7/91, effective 9/7/91. Statutory Authority: RCW 43.70.040. 91-02-049 (Order 121), recodified as § 246-250-120, filed 12/27/90, effective 1/31/91. Statutory Authority: RCW 70.98.080. 87-01-031 (Order 2450), § 402-61-130, filed 12/11/86.]

WAC 246-250-130 Post-closure observation and maintenance. The licensee shall observe, monitor, and carry out necessary maintenance and repairs at the disposal site until the site closure is complete and the license is transferred by the department in accordance with WAC 246-250-140. Responsibility for the disposal site must be maintained by the licensee for five years. A shorter or longer time period for post-closure observation and maintenance may be established and approved as part of the site closure plan, based on site-specific conditions.

[Statutory Authority: RCW 70.98.050 and 70.98.080. 91-16-109 (Order 187), § 246-250-130, filed 8/7/91, effective 9/7/91. Statutory Authority: RCW 43.70.040. 91-02-049 (Order 121), recodified as § 246-250-130, filed 12/27/90, effective 1/31/91. Statutory Authority: RCW 70.98.080. 87-01-031 (Order 2450), § 402-61-140, filed 12/11/86.]

WAC 246-250-140 Transfer of license. Following closure and the period of post-closure observation and maintenance, the licensee may apply for an amendment to transfer the license to the disposal site owner. The license shall be transferred when the department finds:

(1) That the closure of the disposal site has been made in conformance with the licensee's disposal site closure plan, as amended and approved as part of the license;

(2) That reasonable assurance has been provided by the licensee that the performance objectives of this chapter are met;

(3) That any funds and necessary records for care will be transferred to the disposal site owner;

(4) That the post-closure monitoring program is operational for implementation by the disposal site owner; and

(5) That the federal or state agency which will assume responsibility for institutional control of the disposal site is prepared to assume responsibility and ensure that the institutional requirements found necessary under WAC 246-250-090(8) will be met.

[Statutory Authority: RCW 70.98.050 and 70.98.080. 91-16-109 (Order 187), § 246-250-140, filed 8/7/91, effective 9/7/91. Statutory Authority: RCW 43.70.040. 91-02-049 (Order 121), recodified as § 246-250-140, filed 12/27/90, effective 1/31/91. Statutory Authority: RCW 70.98.080. 87-01-031 (Order 2450), § 402-61-150, filed 12/11/86.]

WAC 246-250-150 Termination of license. (1) Following any period of institutional control needed to meet the requirements found necessary under WAC 246-250-090, the licensee may apply for an amendment to terminate the license.

(2) This application will be reviewed in accordance with the provisions of chapter 246-235 WAC.

(3) A license shall be terminated only when the department finds:

(a) That the institutional control requirements found necessary under WAC 246-250-090(8) have been met;

(b) That any additional requirements resulting from new information developed during the institutional control period have been met; and

(c) That permanent monuments or markers warning against intrusion have been installed.

[Statutory Authority: RCW 70.98.050 and 70.98.080. 91-16-109 (Order 187), § 246-250-150, filed 8/7/91, effective 9/7/91. Statutory Authority: RCW 43.70.040. 91-02-049 (Order 121), recodified as § 246-250-150, filed 12/27/90, effective 1/31/91. Statutory Authority: RCW 70.98.080. 87-01-031 (Order 2450), § 402-61-160, filed 12/11/86.]

WAC 246-250-160 General requirement. Land disposal facilities shall be sited, designed, operated, closed, and controlled after closure so that reasonable assurance exists that exposures to individuals are within the requirements established in the performance objectives in WAC 246-250-170 through 246-250-200.

[Statutory Authority: RCW 70.98.050 and 70.98.080. 91-16-109 (Order 187), § 246-250-160, filed 8/7/91, effective 9/7/91. Statutory Authority: RCW 43.70.040. 91-02-049 (Order 121), recodified as § 246-250-160, filed 12/27/90, effective 1/31/91. Statutory Authority: RCW 70.98.080. 87-01-031 (Order 2450), § 402-61-170, filed 12/11/86.]

WAC 246-250-170 Protection of the general population from releases of radioactivity. Concentrations of radioactive material which may be released to the general environment in ground water, surface water, air, soil, plants, or animals shall not result in an annual dose exceeding an equivalent of twenty-five millirems (0.25 mSv) to the whole body, seventy-five millirems (0.75 mSv) to the thyroid, and twenty-five millirems (0.25 mSv) to any other organ of any member of the public. Reasonable effort should be made to maintain releases of radioactivity in effluents to the general environment as low as is reasonably achievable.

[Statutory Authority: RCW 43.70.040. 91-02-049 (Order 121), recodified as § 246-250-170, filed 12/27/90, effective 1/31/91. Statutory Authority: RCW 70.98.080. 87-01-031 (Order 2450), § 402-61-180, filed 12/11/86.]

WAC 246-250-180 Protection of individuals from inadvertent intrusion. Design, operation, and closure of the land disposal facility shall ensure protection of any individual inadvertently intruding into the disposal site and occupying the site or contacting the waste at any time after active institutional controls over the disposal site are removed.

[Statutory Authority: RCW 43.70.040. 91-02-049 (Order 121), recodified as § 246-250-180, filed 12/27/90, effective 1/31/91. Statutory Authority: RCW 70.98.080. 87-01-031 (Order 2450), § 402-61-190, filed 12/11/86.]

WAC 246-250-190 Protection of individuals during operations. After the effective date of these regulations, operations at the land disposal facility shall be conducted in compliance with the standards for radiation protection set out in chapter 246-221 WAC, except for releases of radioactivity in effluents from the land disposal facility, which shall be governed by WAC 246-250-170. Every reasonable effort should be made to maintain radiation exposures as low as is reasonably achievable.

[Statutory Authority: RCW 70.98.050 and 70.98.080. 91-16-109 (Order 187), § 246-250-190, filed 8/7/91, effective 9/7/91. Statutory Authority: RCW 43.70.040. 91-02-049 (Order 121), recodified as § 246-250-190, filed 12/27/90, effective 1/31/91. Statutory Authority: RCW 70.98.080. 87-01-031 (Order 2450), § 402-61-200, filed 12/11/86.]

WAC 246-250-200 Stability of the disposal site after closure. The disposal facility shall be sited, designed, used, operated, and closed to achieve long-term stability of the disposal site and to eliminate, to the extent practicable, the need for ongoing active maintenance of the disposal site following closure so that only surveillance, monitoring, or minor custodial care is required.

[Statutory Authority: RCW 43.70.040. 91-02-049 (Order 121), recodified as § 246-250-200, filed 12/27/90, effective 1/31/91. Statutory Authority: RCW 70.98.080. 87-01-031 (Order 2450), § 402-61-210, filed 12/11/86.]

TECHNICAL REQUIREMENTS FOR LAND DISPOSAL FACILITIES

WAC 246-250-300 Disposal site suitability requirements for land disposal. (1) Disposal site suitability for near-surface disposal. The primary emphasis in disposal site suitability is given to isolation of wastes, and to disposal site features that ensure that the long-term performance objectives are met.

(a) The disposal site shall be capable of being characterized, modeled, analyzed, and monitored.

(b) Within the region where the facility is to be located, a disposal site should be selected so that projected population growth and future developments are not likely to affect the ability of the disposal facility to meet the performance objectives of this chapter.

(c) Areas shall be avoided having known natural resources which, if exploited, would result in failure to meet the performance objectives of this chapter.

(d) The disposal site shall be generally well drained and free of areas of flooding or frequent ponding. Waste disposal shall not take place in a one hundred-year flood plain, coastal high-hazard area or wetland, as defined in Executive Order 11988, "Flood Plain Management Guidelines."

(e) Upstream drainage areas shall be minimized to decrease the amount of runoff which could erode or inundate waste disposal units.

(f) The disposal site shall provide sufficient depth to the water table that ground water intrusion, perennial or otherwise, into the waste will not occur. The department will consider an exception to this requirement to allow disposal below the water table if it can be conclusively shown that disposal site characteristics will result in molecular diffusion being the predominant means of radionuclide movement and the rate of movement will result in the performance objectives being met. In no case will waste disposal be permitted in the zone of fluctuation of the water table.

(g) The hydrogeologic unit used for disposal shall not discharge ground water to the surface, except for ground water monitoring operations.

(h) Areas shall be avoided where tectonic processes such as faulting, folding, seismic activity, or vulcanism may occur with such frequency and extent to significantly affect the ability of the disposal site to meet the performance objectives of this chapter or may preclude defensible modeling and prediction of long-term impacts.

(i) Areas shall be avoided where surface geologic processes such as mass wasting, erosion, slumping, landsliding, or weathering occur with such frequency and extent to significantly affect the ability of the disposal site to meet the performance objectives of this chapter, or may preclude defensible modeling and prediction of long-term impacts.

(j) An existing disposal site may be located where nearby facilities or activities could adversely impact the ability of the site to meet the performance objectives of this chapter or significantly mask the environmental monitoring program, provided an extensive environmental monitoring program exists which is designed to differentiate, to the maximum extent practicable, between contributions from the disposal site and other nearby facilities.

(2) (Reserved.)

[Statutory Authority: RCW 43.70.040. 91-02-049 (Order 121), recodified as § 246-250-300, filed 12/27/90, effective 1/31/91. Statutory Authority: RCW 70.98.080. 87-01-031 (Order 2450), § 402-61-220, filed 12/11/86.]

WAC 246-250-320 Disposal site design for land disposal. (1) Disposal site design for near-surface disposal.

(a) Site design features shall be directed toward long-term isolation and avoidance of the need for continuing active maintenance after site closure.

(b) The disposal site design and operation shall be compatible with the disposal site closure and stabilization plan and lead to disposal site closure that provides reasonable assurance that the performance objectives will be met.

(c) The disposal site shall be designed to complement and improve, where appropriate, the ability of the disposal site's natural characteristics to assure that the performance objectives will be met.

(d) Covers shall be designed to minimize to the extent practicable water infiltration, to direct percolating or surface water away from the disposed waste, and to resist degradation by surface geologic processes and biotic activity.

(e) Surface features shall direct surface water drainage away from disposal units at velocities and gradients which will not result in erosion that will require ongoing active maintenance in the future.

(f) The disposal site shall be designed to minimize to the extent practicable the contact of water with waste during storage, the contact of standing water with waste during disposal, and the contact of percolating or standing water with wastes after disposal.

(2) (Reserved.)

[Statutory Authority: RCW 43.70.040. 91-02-049 (Order 121), recodified as § 246-250-320, filed 12/27/90, effective 1/31/91. Statutory Authority: RCW 70.98.080. 87-01-031 (Order 2450), § 402-61-230, filed 12/11/86.]

WAC 246-250-330 Land disposal facility operation and disposal site closure. (1) Near-surface disposal facility operation and disposal site closure.

(a) Wastes designated as Class A pursuant to chapter 246-249 WAC shall be segregated from other wastes by placing in disposal units which are sufficiently separated from disposal units for the other waste classes so that any interaction between Class A wastes and other wastes will not result in the failure to meet the performance objectives of this chapter. This segregation is not necessary for Class A wastes if they meet the stability requirements in chapter 246-249 WAC.

(b) Wastes designated as Class C pursuant to chapter 246-249 WAC shall be disposed of so that the top of the waste is a minimum of five meters below the top surface of the cover or must be disposed of with intruder barriers that are designed to protect against an inadvertent intrusion for at least five hundred years.

(c) Except as provided in (l) of this subsection, only waste classified as Class A, B, or C shall be acceptable for near-surface disposal. All waste shall be disposed of in accordance with the requirements of (d) through (k) of this subsection.

(d) Wastes shall be emplaced in a manner that maintains the package integrity during emplacement, minimizes the void spaces between packages, and permits the void spaces to be filled.

(e) Void spaces between waste packages shall be filled with earth or other material to reduce future subsidence within the fill.

(f) Waste shall be placed and covered in a manner that limits the radiation dose rate at the surface of the cover to levels that at a minimum will permit the licensee to comply with all provisions of chapter 246-221 WAC at the time the license is transferred pursuant to WAC 246-250-140.

(g) The boundaries and locations of each disposal unit shall be accurately located and mapped by means of a land survey. Near-surface disposal units shall be marked in such a way that the boundaries of each unit can be easily defined. Three permanent survey marker control points, referenced to United States Geological Survey (USGS) or National Geodetic Survey (NGS) survey control stations, shall be established on the site to facilitate surveys. The USGS or NGS control stations shall provide horizontal and vertical controls as checked against USGS or NGS record files.

(h) A buffer zone of land shall be maintained between any buried waste and the disposal site boundary and beneath the disposed waste. The buffer zone shall be of adequate dimensions to carry out environmental monitoring activities specified in WAC 246-250-340(4) and take mitigative measures if needed.

(i) Closure and stabilization measures as set forth in the approved site closure plan shall be carried out as each disposal unit is filled and covered.

(j) Active waste disposal operations shall not have an adverse effect on completed closure and stabilization measures.

(k) Only wastes containing or contaminated with radioactive material shall be disposed of at the disposal site.

(l) Proposals for disposal of waste that is not generally acceptable for near-surface disposal because the waste form

and disposal methods must be different and, in general, more stringent than those specified for Class C waste, may be submitted to the department for approval.

(2) (Reserved.)

[Statutory Authority: RCW 70.98.050 and 70.98.080. 91-16-109 (Order 187), § 246-250-330, filed 8/7/91, effective 9/7/91. Statutory Authority: RCW 43.70.040. 91-02-049 (Order 121), recodified as § 246-250-330, filed 12/27/90, effective 1/31/91. Statutory Authority: RCW 70.98.080. 87-01-031 (Order 2450), § 402-61-240, filed 12/11/86.]

WAC 246-250-340 Environmental monitoring. (1) At the time a new license application is submitted, the applicant shall have conducted a preoperational monitoring program to provide basic environmental data on the disposal site characteristics. The applicant shall obtain information about the ecology, meteorology, climate, hydrology, geology, geochemistry, and seismology of the disposal site. For those characteristics that are subject to seasonal variation, data must cover at least a twelve-month period.

(2) During the land disposal facility site construction and operation, the licensee shall maintain an environmental monitoring program. Measurements and observations must be made and recorded to provide data to evaluate the potential health and environmental impacts during both the construction and the operation of the facility and to enable the evaluation of long-term effects and the need for mitigative measures. The monitoring system must be capable of providing early warning of releases of waste from the disposal site before they leave the site boundary.

(3) After the disposal site is closed, the licensee responsible for postoperational surveillance of the disposal site shall maintain a monitoring system based on the operating history and the closure and stabilization of the disposal site. The monitoring system must be capable of providing early warning of releases of waste from the disposal site before they leave the site boundary.

(4) The licensee shall have plans for taking corrective measures if the environmental monitoring program detects migration of waste which would indicate that the performance objectives may not be met.

[Statutory Authority: RCW 43.70.040. 91-02-049 (Order 121), recodified as § 246-250-340, filed 12/27/90, effective 1/31/91. Statutory Authority: RCW 70.98.080. 87-01-031 (Order 2450), § 402-61-250, filed 12/11/86.]

WAC 246-250-350 Alternative requirements for design and operations. The department may, upon request or on its own initiative, authorize provisions other than those set forth in WAC 246-250-300 through 246-250-340 for the segregation and disposal of waste and for the design and operation of a land disposal facility on a specific basis, if it finds reasonable assurance of compliance with the performance objectives of this chapter.

[Statutory Authority: RCW 70.98.050 and 70.98.080. 91-16-109 (Order 187), § 246-250-350, filed 8/7/91, effective 9/7/91. Statutory Authority: RCW 43.70.040. 91-02-049 (Order 121), recodified as § 246-250-350, filed 12/27/90, effective 1/31/91. Statutory Authority: RCW 70.98.080. 87-01-031 (Order 2450), § 402-61-260, filed 12/11/86.]

WAC 246-250-360 Institutional requirements. (1) Land ownership. Disposal of waste received from other persons may be permitted only on land owned in fee by the federal or state government.

(2) Institutional control. The land owner or custodial agency shall conduct an institutional control program to physically control access to the disposal site following transfer of control of the disposal site from the disposal site operator. The institutional control program shall also include, but not be limited to, conducting an environmental monitoring program at the disposal site, periodic surveillance, minor custodial care, and other requirements as determined by the department; and administration of funds to cover the costs for these activities. The period of institutional controls will be determined by the department, but controls may not be relied upon for more than one hundred years following transfer of institutional control of the disposal site to the owner.

[Statutory Authority: RCW 43.70.040. 91-02-049 (Order 121), recodified as § 246-250-360, filed 12/27/90, effective 1/31/91. Statutory Authority: RCW 70.98.080. 87-01-031 (Order 2450), § 402-61-270, filed 12/11/86.]

WAC 246-250-370 Alternative requirements for waste classification and characteristics. The department may, upon request or on its own initiative, authorize other provisions for the classification and characteristics of waste on a specific basis, if, after evaluation of the specific characteristics of the waste, disposal site, and method of disposal, it finds reasonable assurance of compliance with the performance objectives specified in this chapter.

[Statutory Authority: RCW 43.70.040. 91-02-049 (Order 121), recodified as § 246-250-370, filed 12/27/90, effective 1/31/91. Statutory Authority: RCW 70.98.080. 87-01-031 (Order 2450), § 402-61-280, filed 12/11/86.]

FINANCIAL ASSURANCES

WAC 246-250-500 Applicant qualifications and assurances. Each applicant shall show that it either possesses the necessary funds or has reasonable assurance of obtaining the necessary funds, or by a combination of the two, to cover the estimated costs of conducting all licensed activities over the planned operating life of the project, including costs of construction and disposal.

[Statutory Authority: RCW 43.70.040. 91-02-049 (Order 121), recodified as § 246-250-500, filed 12/27/90, effective 1/31/91. Statutory Authority: RCW 70.98.080. 87-01-031 (Order 2450), § 402-61-290, filed 12/11/86.]

WAC 246-250-520 Funding for disposal site closure and stabilization. (1) The applicant shall provide assurances prior to the commencement of operations that sufficient funds will be available to carry out disposal site closure and stabilization, including: (a) Decontamination or dismantlement of land disposal facility structures; and (b) closure and stabilization of the disposal site so that following transfer of the disposal site to the site owner, the need for ongoing active maintenance is eliminated to the extent practicable and only minor custodial care, surveillance and monitoring are required. These assurances shall be based on department-approved cost estimates reflecting the department-approved plan for disposal site closure and stabilization. The applicant's cost estimates must take into account total costs that would be incurred if an independent contractor were hired to perform the closure and stabilization work.

(2) In order to avoid unnecessary duplication and expense, the department will accept financial sureties that have been consolidated with earmarked financial or surety

arrangements established to meet requirements of federal or other state agencies for such decontamination, closure, and stabilization. The department will accept these arrangements only if they are considered adequate to satisfy the requirements of this section and that the portion of the surety which covers the closure of the disposal site is clearly identified and committed for use in accomplishing these activities.

(3) The licensee's financial or surety arrangement shall be submitted annually for review by the department to assure that sufficient funds will be available for completion of the closure plan.

(4) The amount of the licensee's financial or surety arrangement shall change in accordance with changes in the predicted costs of closure and stabilization. Factors affecting closure and stabilization cost estimates include inflation, increases in the amount of disturbed land, changes in engineering plans, closure and stabilization that has already been accomplished, and any other conditions affecting costs. The financial or surety arrangement shall be sufficient at all times to cover the costs of closure and stabilization of the disposal units that are expected to be used before the next license renewal.

(5) The financial or surety arrangement shall be written for a specified period of time and shall be automatically renewed unless the person who issues the surety notifies the department, the beneficiary (the site owner), and the principal (the licensee) not less than ninety days prior to the renewal date of its intention not to renew. In such a situation, the licensee must submit a replacement surety within thirty days after notification of cancellation. If the licensee fails to provide a replacement surety acceptable to the department, the beneficiary may collect on the original surety.

(6) Proof of forfeiture shall not be necessary to collect the surety so that, in the event that the licensee could not provide an acceptable replacement surety within the required time, the surety shall be automatically collected prior to its expiration. The conditions described above shall be clearly stated on any surety instrument.

(7) Financial or surety arrangements generally acceptable to the department include surety bonds, cash deposits, certificates of deposit, deposits of government securities, escrow accounts, irrevocable letters or lines of credit, trust funds, and combinations of the above or such other types of arrangements as may be approved by the department. Self-insurance, or any arrangement which essentially constitutes self-insurance, will not satisfy the surety requirement for private sector applicants.

(8) The licensee's financial or surety arrangement shall remain in effect until the closure and stabilization program has been completed and approved by the department, and the license has been transferred to the site owner.

[Statutory Authority: RCW 43.70.040. 91-02-049 (Order 121), recodified as § 246-250-520, filed 12/27/90, effective 1/31/91. Statutory Authority: RCW 70.98.080. 87-01-031 (Order 2450), § 402-61-300, filed 12/11/86.]

WAC 246-250-530 Financial assurances for institutional controls. (1) Prior to the issuance of the license, the applicant shall provide for departmental approval, a binding arrangement, between the applicant and the disposal site owner that ensures that sufficient funds will be available to cover the costs of monitoring and any required maintenance during the institutional control period. The binding arrangement shall be reviewed annually by the department to ensure that changes in inflation, technology, and disposal facility operations are reflected in the arrangements.

(2) Subsequent changes to the binding arrangement specified in subsection (1) of this section relevant to institutional control shall be submitted to the department for prior approval.

[Statutory Authority: RCW 43.70.040. 91-02-049 (Order 121), recodified as § 246-250-530, filed 12/27/90, effective 1/31/91. Statutory Authority: RCW 70.98.080. 87-01-031 (Order 2450), § 402-61-310, filed 12/11/86.]

RECORDS, REPORTS, TESTS, AND INSPECTIONS

WAC 246-250-600 Maintenance of records, reports, and transfers. (1) Each licensee shall maintain any records and make any reports in connection with the licensed activities as may be required by the conditions of the license or by the rules, regulations, and orders of the department.

(2) Records which are required by these regulations or by license conditions shall be maintained for a period specified by the appropriate regulations or by license condition. If a retention period is not otherwise specified, these records must be maintained and transferred to the officials specified in subsection (4) of this section as a condition of license termination unless the department otherwise authorizes their disposition.

(3) Records which shall be maintained pursuant to this chapter may be the original or a reproduced copy or microfilm if this reproduced copy or microfilm is capable of producing copy that is clear and legible at the end of the required retention period.

(4) Notwithstanding subsections (1) through (3) of this section, copies of records of the location and the quantity of wastes contained in the disposal site must be transferred upon license termination to the chief executive of the nearest municipality, the chief executive of the county in which the facility is located, the county zoning board or land development and planning agency, the state governor, the United States Department of Energy, and other state, local, and federal governmental agencies as designated by the department at the time of license termination.

(5) Following receipt and acceptance of a shipment of radioactive waste, the licensee shall record the date that the shipment is received at the disposal facility, the date of disposal of the waste, a traceable shipment manifest number, a description of any engineered barrier or structural overpack provided for disposal of the waste, the location of disposal at the disposal site, the containment integrity of the waste disposal containers as received, any discrepancies between materials listed on the manifest and those received, the volume of any pallets, bracing, or other shipping or on-site generated materials that are contaminated, and are disposed of as contaminated or suspect materials, and any evidence of leaking or damaged disposal containers or radiation or contamination levels in excess of limits specified in U.S. Department of Transportation and state of Washington regulations. The licensee shall briefly describe any repackaging operations of any of the disposal containers included in the shipment, plus any other information required by the department as a license condition. The licensee shall retain these records until the

department transfers or terminates the license that authorizes the activities described in these regulations.

(6) Each licensee authorized to dispose of waste received from other persons shall file a copy of its financial report or a certified financial statement annually with the department in order to update the information base for determining financial qualifications.

(7)(a) Each licensee authorized to dispose of waste received from other persons, pursuant to this chapter, shall submit annual reports to the department. Reports shall be submitted by the end of the first calendar quarter of each year for the preceding year.

(b) The reports shall include:

(i) Specification of the quantity of each of the principal contaminants released to unrestricted areas in liquid and in airborne effluents during the preceding year;

(ii) The results of the environmental monitoring program;

(iii) A summary of licensee disposal unit survey and maintenance activities;

(iv) A summary, by waste class, of activities and quantities of radionuclides disposed of;

(v) Any instances in which observed site characteristics were significantly different from those described in the application for a license; and

(vi) Any other information the department may require.

(c) If the quantities of waste released during the reporting period, monitoring results, or maintenance performed are significantly different from those expected, the report must cover this specifically.

(8) In addition to the other requirements of this section, the licensee shall store, or have stored, manifest and other information pertaining to receipt and disposal of radioactive waste in an electronic recordkeeping system.

(a) The manifest information that must be electronically stored is:

(i) That required in WAC 246-249-090 with the exception of shipper and carrier telephone numbers and shipper and consignee certifications; and

(ii) That information required in subsection (5) of this section.

(b) As specified in facility license conditions, the licensee shall have the capability to report the stored information, or subsets of this information, on a computer-readable medium.

[Statutory Authority: RCW 70.98.050 and 70.98.080. 98-09-117, § 246-250-600, filed 4/22/98, effective 5/23/98; 91-16-109 (Order 187), § 246-250-600, filed 8/7/91, effective 9/7/91. Statutory Authority: RCW 43.70.040. 91-02-049 (Order 121), recodified as § 246-250-600, filed 12/27/90, effective 1/31/91. Statutory Authority: RCW 70.98.080. 87-01-031 (Order 2450), § 402-61-320, filed 12/11/86.]

WAC 246-250-620 Tests on land disposal facilities. Each licensee shall perform, or permit the department to perform, any tests the department deems appropriate or necessary for the administration of the regulations in this chapter, including but not limited to, tests of:

(1) Wastes;

(2) Facilities used for the receipt, storage, treatment, handling, or disposal of wastes;

(3) Radiation detection and monitoring instruments; or

(4) Other equipment and devices used in connection with the receipt, possession, handling, treatment, storage, or disposal of waste.

[Statutory Authority: RCW 43.70.040. 91-02-049 (Order 121), recodified as § 246-250-620, filed 12/27/90, effective 1/31/91. Statutory Authority: RCW 70.98.080. 87-01-031 (Order 2450), § 402-61-330, filed 12/11/86.]

LAND DISPOSAL OF RADIOACTIVE WASTE

WAC 246-250-700 Agency inspections of land disposal facilities. (1) Each licensee shall afford to the department at all reasonable times opportunity to inspect waste not yet disposed of, and the premises, equipment, operations, and facilities in which wastes are received, possessed, handled, treated, stored, or disposed.

(2) Each licensee shall make available to the department for inspection, upon reasonable notice, records kept by it pursuant to these regulations. Authorized representatives of the department may copy and take away copies of, for the department's use, any record required to be kept pursuant to these regulations.

[Statutory Authority: RCW 43.70.040. 91-02-049 (Order 121), recodified as § 246-250-700, filed 12/27/90, effective 1/31/91. Statutory Authority: RCW 70.98.080. 87-01-031 (Order 2450), § 402-61-340, filed 12/11/86.]

Chapter 246-252 WAC

RADIATION PROTECTION—URANIUM AND/OR THORIUM MILLING

WAC

246-252-001	Reclamation and decommissioning.
246-252-010	Definitions.
246-252-020	Purpose of uranium mill tailings areas.
246-252-030	Criteria related to disposition of uranium mill tailings or wastes.
246-252-040	Continuing dose assessment.
246-252-050	Appendix A.

WAC 246-252-001 Reclamation and decommissioning. A specific plan for reclamation and disposal of tailings and for decommissioning the site of uranium or thorium milling operations shall be included as part of the proposed action assessed under SEPA regulations and guidelines as required by WAC 246-235-086(1) for licensing of environmentally significant operations. For any uranium or thorium mill in operation on or before the effective date of this regulation for which a plan for reclamation and disposal of tailings and decommissioning of the site has not been submitted and assessed, such a plan must be submitted to the department and a final environmental impact statement or final declaration of nonsignificance must accompany or precede the license renewal.

[Statutory Authority: RCW 70.98.050. 00-08-013, § 246-252-001, filed 3/24/00, effective 4/24/00. Statutory Authority: RCW 70.98.050 and 70.98.080. 91-16-109 (Order 187), § 246-252-001, filed 8/7/91, effective 9/7/91. Statutory Authority: RCW 43.70.040. 91-02-049 (Order 121), recodified as § 246-252-001, filed 12/27/90, effective 1/31/91. Statutory Authority: RCW 70.98.080. 79-12-073 (Order 1459), § 402-52-005, filed 11/30/79, effective 1/1/80.]

WAC 246-252-010 Definitions. The following definitions apply to the specified terms as used in this chapter.

(1) "Aquifer" means a geologic formation, group of formations, or part of a formation capable of yielding a signifi-

cant amount of ground water to wells or springs. Any saturated zone created by uranium or thorium recovery operations would not be considered an aquifer unless the zone is, or potentially is (a) hydraulically interconnected to a natural aquifer, (b) capable of discharge to surface water, or (c) reasonably accessible because of migration beyond the vertical projection of the boundary of the land transferred to long-term government ownership and care in accordance with WAC 246-252-030(11).

(2) "As expeditiously as practicable considering technological feasibility," for the purposes of Criterion 6A, means as quickly as possible considering: The physical characteristics of the tailings and the site; the limits of available technology; the need for consistency with mandatory requirements of other regulatory programs; and factors beyond the control of the licensee. The phrase permits consideration of the cost of compliance only to the extent specifically provided for by use of the term "available technology."

(3) "Available technology" means technologies and methods for emplacing a final radon barrier on uranium mill tailings piles or impoundments. This term shall not be construed to include extraordinary measures or techniques that would impose costs that are grossly excessive as measured by practice within the industry (or one that is reasonably analogous), (such as, by way of illustration only, unreasonable overtime, staffing, or transportation requirements, etc., considering normal practice in the industry; laser fusion of soils, etc.), provided there is reasonable progress toward emplacement of the final radon barrier. To determine grossly excessive costs, the relevant baseline against which cost shall be compared is the cost estimate for tailings impoundment closure contained in the licensee's approved reclamation plan, but costs beyond these estimates shall not automatically be considered grossly excessive.

(4) "Closure" means the activities following operations to decontaminate and decommission the buildings and site used to produce by-product materials and reclaim the tailings and/or waste disposal area.

(5) "Closure plan" means the department approved plan to accomplish closure.

(6) "Compliance period" begins when the department sets secondary ground water protection standards and ends when the owner or operator's license is terminated and the site is transferred to the state or federal agency for long-term care.

(7) "Dike" means an embankment or ridge of either natural or man-made materials used to prevent the movement of liquids, sludges, solids, or other materials.

(8) "Disposal area" means the area containing by-product materials to which the requirements of Criterion 6 apply.

(9) "Existing portion" means that land surface area of an existing surface impoundment on which significant quantities of uranium or thorium by-product materials had been placed prior to September 30, 1983.

(10) "Factors beyond the control of the licensee" means factors proximately causing delay in meeting the schedule in the applicable reclamation plan for the timely emplacement of the final radon barrier notwithstanding the good faith efforts of the licensee to complete the barrier in compliance with paragraph (a) of Criterion 6A. These factors may include, but are not limited to:

(a) Physical conditions at the site;

(b) Inclement weather or climatic conditions;

(c) An act of God;

(d) An act of war;

(e) A judicial or administrative order or decision, or change to the statutory, regulatory, or other legal requirements applicable to the licensee's facility that would preclude or delay the performance of activities required for compliance;

(f) Labor disturbances;

(g) Any modifications, cessation or delay ordered by state, federal, or local agencies;

(h) Delays beyond the time reasonably required in obtaining necessary government permits, licenses, approvals, or consent for activities described in the reclamation plan proposed by the licensee that result from agency failure to take final action after the licensee has made a good faith, timely effort to submit legally sufficient applications, responses to requests (including relevant data requested by the agencies), or other information, including approval of the reclamation plan; and

(i) An act or omission of any third party over whom the licensee has no control.

(11) "Final radon barrier" means the earthen cover (or approved alternative cover) over tailings or waste constructed to comply with Criterion 6 of WAC 246-252-030 (excluding erosion protection features).

(12) "Ground water" means water below the land surface in a zone of saturation. For the purposes of this chapter, ground water is the water contained within an aquifer as defined above.

(13) "Leachate" means any liquid, including any suspended or dissolved components in the liquid, that has percolated through or drained from the by-product material.

(14) "Licensed site" means the area contained within the boundary of a location under the control of persons generating or storing by-product materials under a department license.

(15) "Liner" means a continuous layer of natural or man-made materials, beneath or on the sides of a surface impoundment which restricts the downward or lateral escape of by-product material, hazardous constituents, or leachate.

(16) "Milestone" means an action or event that is required to occur by an enforceable date.

(17) "Operation" means that a uranium or thorium mill tailings pile or impoundment is being used for the continued placement of by-product material or is in standby status for such placement. A pile or impoundment is in operation from the day that by-product material is first placed in the pile or impoundment until the day final closure begins.

(18) "Point of compliance" is the site specific location in the uppermost aquifer where the ground water protection standard must be met.

(19) "Reclamation plan," for the purposes of Criterion 6A, means the plan detailing activities to accomplish reclamation of the tailings or waste disposal area in accordance with the technical criteria of WAC 246-252-030. The reclamation plan must include a schedule for reclamation milestones that are key to the completion of the final radon barrier including as appropriate, but not limited to, wind blown tailings retrieval and placement on the pile, interim stabilization

(including dewatering or the removal of freestanding liquids and recontouring), and final radon barrier construction. (Reclamation of tailings must also be addressed in the closure plan; the detailed reclamation plan may be incorporated into the closure plan.)

(20) "Surface impoundment" means a natural topographic depression, man-made excavation, or diked area, which is designed to hold an accumulation of liquid wastes or wastes containing free liquids, and which is not an injection well.

(21) "Uppermost aquifer" means the geologic formation nearest the natural ground surface that is an aquifer, as well as lower aquifers that are hydraulically interconnected with this aquifer within the facility's property boundary.

[Statutory Authority: RCW 70.98.050. 97-13-055, § 246-252-010, filed 6/16/97, effective 7/17/97. Statutory Authority: RCW 70.98.050 and 70.98.-080. 91-16-109 (Order 187), § 246-252-010, filed 8/7/91, effective 9/7/91. Statutory Authority: RCW 43.70.040. 91-02-049 (Order 121), recodified as § 246-252-010, filed 12/27/90, effective 1/31/91. Statutory Authority: RCW 70.98.080. 87-01-031 (Order 2450), § 402-52-050, filed 12/11/86.]

WAC 246-252-020 Purpose of uranium mill tailings areas. Uranium mill tailing areas shall be used only for disposal of radioactive wastes originating from the exploration, mining, and milling of uranium.

[Statutory Authority: RCW 43.70.040. 91-02-049 (Order 121), recodified as § 246-252-020, filed 12/27/90, effective 1/31/91. Statutory Authority: RCW 70.98.080 and chapter 70.121 RCW. 86-17-027 (Order 2406), § 402-52-090, filed 8/13/86.]

WAC 246-252-030 Criteria related to disposition of uranium mill tailings or wastes. As used in this section, the term "as low as reasonably achievable" has the same meaning as in WAC 246-220-007. The term by-product material means the tailings or wastes produced by the extraction or concentration of uranium or thorium from any ore processed primarily for its source material content.

As required by WAC 246-235-110(6), each applicant for a license to possess and use source material in conjunction with uranium or thorium milling, or by-product material at sites formerly associated with such milling, is required to include in a license application proposed specifications relating to the milling operation and the disposition of tailings or waste resulting from such milling activities. This section establishes criteria relating to the siting, operation, decontamination, decommissioning, and reclamation of mills and tailings or waste systems and sites at which such mills and systems are located and site and by-product material ownership. Applications must clearly demonstrate how these criteria have been addressed. The specifications shall be developed considering the expected full capacity of tailings or waste systems and the lifetime of mill operations. Where later expansions of systems or operations may be likely, the amenability of the disposal system to accommodate increased capacities without degradation in long-term stability and other performance factors shall be evaluated.

Licensees or applicants may propose alternatives to the specific requirements in these criteria. The alternative proposals may take into account local or regional conditions, including geology, topography, hydrology, and meteorology. The department may find that the proposed alternatives meet the department's requirements if the alternatives will achieve a level of stabilization and containment of the sites concerned, and a level of protection for public health, safety, and the environment from radiological and nonradiological hazards associated with the sites, which is equivalent to, to the extent practicable, or more stringent than the level which would be achieved by the requirements of the standards promulgated by the United States Environmental Protection Agency in 40 CFR 192, Subparts D and E.

(1) Criterion 1 - In selecting among alternative tailings disposal sites or judging the adequacy of existing tailings sites, the following site features which would contribute to meeting the broad objective of permanent isolation of the tailings and associated contaminants from man and the environment for one thousand years to the extent reasonably achievable, and in any case, for at least two hundred years without ongoing active maintenance shall be considered:

(a) Remoteness from populated areas;

(b) Hydrogeologic and other environmental conditions conducive to continued immobilization and isolation of contaminants from ground water sources; and

(c) Potential for minimizing erosion, disturbance, and dispersion by natural forces over the long term.

The site selection process must be an optimization to the maximum extent reasonably achievable in terms of these features.

In the selection of disposal sites, primary emphasis shall be given to isolation of tailings or wastes, a matter having long-term impacts, as opposed to consideration only of short-term convenience or benefits, such as minimization of transportation or land acquisition costs. While isolation of tailings will be a function of both site characteristics and engineering design, overriding consideration shall be given to siting features given the long-term nature of the tailings hazards.

Tailings shall be disposed in a manner such that no active maintenance is required to preserve the condition of the site.

(2) Criterion 2 - To avoid proliferation of small waste disposal sites, by-product material from in-situ extraction operations, such as residues from solution evaporation or contaminated control processes, and wastes from small remote above ground extraction operations shall be disposed at existing large mill tailings disposal sites; unless, considering the nature of the wastes, such as their volume and specific activity and the costs and environmental impacts of transporting the wastes to a large disposal site, such offsite disposal is demonstrated to be impracticable or the advantage of onsite burial clearly outweighs the benefits of reducing the perpetual surveillance obligations.

(3) Criterion 3 - The "prime option" for disposal of tailings is placement below grade, either in mines or specially excavated pits (that is, where the need for any specially constructed retention structure is eliminated).

The evaluation of alternative sites and disposal methods performed by mill operators in support of their proposed tailings disposal program (provided in applicants' environmental reports) shall reflect serious consideration of this disposal mode. In some instances, below grade disposal may not be the most environmentally sound approach, such as might be the case if a ground water formation is relatively close to the surface or not very well isolated by overlying soils and rock. Also, geologic and topographic conditions might make full,

below grade burial impracticable; for example, near-surface bedrock could create prominent excavation costs while more suitable alternate sites may be available. Where full below grade burial is not practicable, the size of the retention structures, and the size and steepness of slopes of associated exposed embankments, shall be minimized by excavation to the maximum extent reasonably achievable or appropriate, given the geologic and hydrogeologic conditions at a site. In these cases, it must be demonstrated that an above-grade disposal program will provide reasonably equivalent isolation of the tailings from natural erosional forces.

(4) Criterion 4 - The following site and design criteria shall be adhered to whether tailings or wastes are disposed of above or below grade:

(a) Upstream rainfall catchment areas must be minimized to decrease erosion potential and the size of the probable maximum flood which could erode or wash out sections of the tailings disposal area.

(b) Topographic features shall provide good wind protection.

(c) Embankment and cover slopes shall be relatively flat after final stabilization to minimize erosion potential and to provide conservative factors of safety assuring long-term stability. The broad objective should be to contour final slopes to grades which are as close as possible to those which would be provided if tailings were disposed of below grade; this could, for example, lead to slopes of about ten horizontal to one vertical (10h:1v) or less steep. In general, slopes should not be steeper than about 5h:1v. Where steeper slopes are proposed, reasons why a slope less steep than 5h:1v would be impracticable should be provided, and compensating factors and conditions which make such slopes acceptable should be identified.

(d) A fully self-sustaining vegetative cover shall be established or rock cover employed to reduce wind and water erosion to negligible levels.

Where a full vegetative cover is not likely to be self-sustaining due to climatic conditions, such as in semi-arid and arid regions, rock cover shall be employed on slopes of the impoundment system. The NRC will consider relaxing this requirement for extremely gentle slopes such as those which may exist on the top of the pile.

The following factors shall be considered in establishing the final rock cover design to avoid displacement of rock particles by human and animal traffic or by natural processes, and to preclude undercutting and piping:

(i) Shape, size, composition, gradation of rock particles (excepting bedding material, average particle size shall be at least cobble size or greater);

(ii) Rock cover thickness and zoning of particles by size; and

(iii) Steepness of underlying slopes.

(e) Individual rock fragments shall be dense, sound, and resistant to abrasion, and free from defects that would tend to unduly increase their destruction by water and frost actions. Weak, friable, or laminated aggregate shall not be used. Shale, rock laminated with shale, and cherts shall not be used.

Rock covering of slopes may not be required where top covers are on the order of ten meters or greater; impoundment slopes are on the order of 10h:1v or less; bulk cover materials have inherently favorable erosion resistance characteristics; and there is negligible drainage catchment area upstream of the pile, and there is good wind protection as described in (a) and (b) of this subsection.

(f) Impoundment surfaces shall be contoured to avoid areas of concentrated surface runoff or abrupt or sharp changes in slope gradient. In addition to rock cover on slopes, areas toward which surface runoff might be directed shall be well protected with substantial rock cover (riprap). In addition to providing for stability of the impoundment systems itself, the overall stability, erosion potential, and geomorphology of surrounding terrain shall be evaluated to assure that there are no processes, such as gully erosion, which would lead to impoundment instability.

(g) The impoundment shall not be located near a capable fault that could cause a maximum credible earthquake larger than that which the impoundment could reasonably be expected to withstand. As used in this criterion, the term "capable fault" has the same meaning as defined in Section III (g) of Appendix A of 10 CFR Part 100. The term "maximum credible earthquake" means that earthquake which would cause the maximum vibratory ground motion based upon an evaluation of earthquake potential considering the regional and local geology and seismology and specific characteristics of local subsurface material.

(h) The impoundment, where feasible, should be designed to incorporate features which will promote deposition of suspended particles. For example, design features which promote deposition of sediment suspended in any runoff which flows into the impoundment area might be utilized; the object of such a design feature would be to enhance the thickness of cover over time.

(5) Criterion 5 - Criteria 5(a) through 5(g) and new Criterion 13 incorporate the basic ground water protection standards imposed by the United States Environmental Protection Agency in 40 CFR Part 192, Subparts D and E (48 FR 45926; October 7, 1983) which apply during operations and prior to the end of closure. Ground water monitoring to comply with these standards is required by Criterion 7.

(a) The primary ground water protection standard is a design standard for surface impoundments used to manage uranium and thorium by-product material. Surface impoundments (except for an existing portion) must have a liner that is designed, constructed, and installed to prevent any migration of wastes out of the impoundment to the adjacent subsurface soil, ground water, or surface water at any time during the active life (including the closure period) of the impoundment. The liner may be constructed of materials that may allow wastes to migrate into the liner (but not into the adjacent subsurface soil, ground water, or surface water) during the active life of the facility, provided that impoundment closure includes removal or decontamination of all waste residues, contaminated containment system components (liners, etc.), contaminated subsoils, and structures and equipment contaminated with waste and leachate. For impoundments that will be closed with the liner material left in place, the liner must be constructed of materials that can prevent wastes from migrating into the liner during the active life of the facility.

(b) The liner required by (a) of this subsection must be:

(i) Constructed of materials that have appropriate chemical properties and sufficient strength and thickness to pre-

vent failure due to pressure gradients (including static head and external hydrogeologic forces), physical contact with the waste or leachate to which they are exposed, climatic conditions, the stress of installation, and the stress of daily operation;

(ii) Placed upon a foundation or base capable of providing support to the liner and resistance to pressure gradients above and below the liner to prevent failure of the liner due to settlement, compression, or uplift; and

(iii) Installed to cover all surrounding earth likely to be in contact with the wastes or leachate.

(c) The applicant or licensee will be exempted from the requirements of (a) of this subsection if the department finds, based on a demonstration by the applicant or licensee, that alternate design and operating practices, including the closure plan, together with site characteristics will prevent the migration of any hazardous constituents into ground water or surface water at any future time. In deciding whether to grant an exemption, the department will consider:

(i) The nature and quantity of the wastes;

(ii) The proposed alternate design and operation;

(iii) The hydrogeologic setting of the facility, including the attenuative capacity and thickness of the liners and soils present between the impoundment and ground water or surface water; and

(iv) All other factors which would influence the quality and mobility of the leachate produced and the potential for it to migrate to ground water or surface water.

(d) A surface impoundment must be designed, constructed, maintained, and operated to prevent overtopping resulting from normal or abnormal operations; overfilling; wind and wave actions; rainfall; run-on; from malfunctions of level controllers, alarms, and other equipment; and human error.

(e) When dikes are used to form the surface impoundment, the dikes must be designed, constructed, and maintained with sufficient structural integrity to prevent massive failure of the dikes. In ensuring structural integrity, it must not be presumed that the liner system will function without leakage during the active life of the impoundment.

(f) Uranium and thorium by-product materials must be managed to conform to the following secondary ground water protection standard: Hazardous constituents entering the ground water from a licensed site must not exceed the specified concentration limits in the uppermost aquifer beyond the point of compliance during the compliance period. Hazardous constituents are those constituents identified by the department pursuant to (g) of this subsection. Specified concentration limits are those limits established by the department as indicated in (j) of this subsection. The department will also establish the point of compliance and compliance period on a site specific basis through license conditions and orders. The objective in selecting the point of compliance is to provide the earliest practicable warning that the impoundment is releasing hazardous constituents to the ground water. The point of compliance must be selected to provide prompt indication of ground water contamination on the hydraulically downgradient edge of the disposal area. The department must identify hazardous constituents, establish concentration limits, set the compliance period, and adjust the point of compliance, if needed, when the detection monitoring established under criterion 7 indicates leakage of hazardous constituents from the disposal area.

(g) A constituent becomes a hazardous constituent subject to (j) of this subsection when the constituent:

(i) Is reasonably expected to be in or derived from the by-product material in the disposal area;

(ii) Has been detected in the ground water in the uppermost aquifer; and

(iii) Is listed in WAC 246-252-050 Appendix A.

(h) The department may exclude a detected constituent from the set of hazardous constituents on a site specific basis if it finds that the constituent is not capable of posing a substantial present or potential hazard to human health or the environment. In deciding whether to exclude constituents, the department will consider the following:

(i) Potential adverse effect on ground water quality, considering —

(A) The physical and chemical characteristics of the waste in the licensed site, including its potential for migration;

(B) The hydrogeological characteristics of the facility and surrounding land;

(C) The quantity of ground water and the direction of ground water flow;

(D) The proximity and withdrawal rates of ground water users;

(E) The current and future uses of ground water in the area;

(F) The existing quality of ground water, including other sources of contamination and their cumulative impact on the ground water quality;

(G) The potential for health risks caused by human exposure to waste constituents;

(H) The potential damage to wildlife, crops, vegetation, and physical structures caused by exposure to waste constituents;

(I) The persistence and permanence of the potential adverse effects.

(ii) Potential adverse effects on hydraulically-connected surface water quality, considering —

(A) The volume and physical and chemical characteristics of the waste in the licensed site;

(B) The hydrogeological characteristics of the facility and surrounding land;

(C) The quantity and quality of ground water, and the direction of ground water flow;

(D) The patterns of rainfall in the region;

(E) The proximity of the licensed site to surface waters;

(F) The current and future uses of surface waters in the area and any water quality standards established for those surface waters;

(G) The existing quality of surface water, including other sources of contamination and the cumulative impact on surface water quality;

(H) The potential for health risks caused by human exposure to waste constituents;

(I) The potential damage to wildlife, crops, vegetation, and physical structures caused by exposure to waste constituents; and

(J) The persistence and permanence of the potential adverse effects.

(i) In making any determinations under (h) and (k) of this subsection about the use of ground water in the area around the facility, the department will consider any identification of underground sources of drinking water and exempted aquifers made by the United States Environmental Protection Agency.

(j) At the point of compliance, the concentration of a hazardous constituent must not exceed —

(i) The department approved background concentration of that constituent in the ground water;

(ii) The respective value given in the table in subsection (5)(l) of this section if the constituent is listed in the table and if the background level of the constituent is below the value listed; or

(iii) An alternate concentration limit established by the department.

(k) Conceptually, background concentrations pose no incremental hazards and the drinking water limits in (j)(i) of this subsection state acceptable hazards but these two options may not be practically achievable at a specific site. Alternate concentration limits that present no significant hazard may be proposed by licensees for department consideration. Licensees must provide the basis for any proposed limits including consideration of practicable corrective actions, that limits are as low as reasonably achievable, and information on the factors the department must consider.

The department will establish a site specific alternate concentration limit for a hazardous constituent as provided in (j) of this subsection if it finds that the constituent will not pose a substantial present or potential hazard to human health or the environment as long as the alternate concentration limit is not exceeded. In establishing alternate concentration limits, the department will apply its as low as reasonably achievable criterion in this chapter. The department will also consider the following factors:

(i) Potential adverse effects on ground water quality, considering —

(A) The physical and chemical characteristics of the waste in the licensed site including its potential for migration;

(B) The hydrogeological characteristics of the facility and surrounding land;

(C) The quantity of ground water and the direction of ground water flow;

(D) The proximity and withdrawal rates of ground water users;

(E) The current and future uses of ground water in the area;

(F) The existing quality of ground water, including other sources of contamination and their cumulative impact on the ground water quality;

(G) The potential for health risks caused by human exposure to waste constituents;

(H) The potential damage to wildlife, crops, vegetation, and physical structures caused by exposure to waste constituents;

(I) The persistence and permanence of the potential adverse effects.

(ii) Potential adverse effects on hydraulically-connected surface water quality, considering —

(A) The volume and physical and chemical characteristics of the waste in the licensed site;

(B) The hydrogeological characteristics of the facility and surrounding land;

(C) The quantity and quality of ground water, and the direction of ground water flow;

(D) The patterns of rainfall in the region;

(E) The proximity of the licensed site to surface waters;

(F) The current and future uses of surface waters in the area and any water quality standards established for those surface waters;

(G) The existing quality of surface water including other sources of contamination and the cumulative impact on surface water quality;

(H) The potential for health risks caused by human exposure to waste constituents;

(I) The potential damage to wildlife, crops, vegetation, and physical structures caused by exposure to waste constituents; and

(J) The persistence and permanence of the potential adverse effects.

(l) MAXIMUM VALUES FOR GROUND WATER PROTECTION:

Constituent or Property	Maximum Concentration
	Milligrams per liter
Arsenic	0.05
Barium	1.0
Cadmium	0.01
Chromium	0.05
Lead	0.05
Mercury	0.002
Selenium	0.01
Silver	0.05
Endrin (1,2,3,4,10,10-hexachloro-1,7 -expoxy-1,4,4a,5,6,7,8,9a-octahydro-1, 4-endo, endo-5,8-dimethano naphthalene)	0.0002
Lindane (1,2,3,4,5,6-hexachlorocyclohexane, gamma isomer)	0.004
Methoxychlor (1,1,1-Trichloro-2,2-bis) (p-methoxyphenylethane)	0.1
Toxaphene ($C_{10}H_{10}Cl_6$, Technical chlorinated camphene, 67-69 percent chlorine)	0.005
2,4-D (2,4-Dichlorophenoxyacetic acid)	0.1
2,4,5-TP Silvex (2,4,5-Trichlorophenoxypropionic acid)	0.01
	Picocuries per liter
Combined radium - 226 and radium - 228	5
Gross alpha - particle activity (excluding radon and uranium when producing uranium by-product material or thorium when producing thorium by-product material)	15

(m) If the ground water protection standards established under (f) of this subsection are exceeded at a licensed site, a corrective action program must be put into operation as soon as is practicable, and in no event later than eighteen months after the department finds that the standards have been exceeded. The licensee shall submit the proposed corrective action program and supporting rationale for department approval prior to putting the program into operation, unless otherwise directed by the department. The objective of the program is to return hazardous constituent concentration levels in ground water to the concentration limits set as standards. The licensee's proposed program must address removing the hazardous constituents that have entered the ground water at the point of compliance or treating them in place. The program must also address removing or treating in place

any hazardous constituents that exceed concentration limits in ground water between the point of compliance and the downgradient facility property boundary. The licensee shall continue corrective action measures to the extent necessary to achieve and maintain compliance with the ground water protection standard. The department will determine when the licensee may terminate corrective action measures based on data from the ground water monitoring program and other information that provide reasonable assurance that the ground water protection standard will not be exceeded.

(n) In developing and conducting ground water protection programs, applicants and licensees shall also consider the following:

(i) Installation of bottom liners (where synthetic liners are used, a leakage detection system must be installed immediately below the liner to ensure major failures are detected if they occur. This is in addition to the ground water monitoring program conducted as provided in Criterion 7. Where clay liners are proposed or relatively thin, in-situ clay soils are to be relied upon for seepage control, tests must be conducted with representative tailings solutions and clay materials to confirm that no significant deterioration of permeability or stability properties will occur with continuous exposure of clay to tailings solutions. Tests must be run for a sufficient period of time to reveal any effects if they are going to occur (in some cases deterioration has been observed to occur rather rapidly after about nine months of exposure)).

(ii) Mill process designs which provide the maximum practicable recycle of solutions and conservation of water to reduce the net input of liquid to the tailings impoundment.

(iii) Dewatering of tailings by process devices and/or in-situ drainage systems (at new sites, tailings must be dewatered by a drainage system installed at the bottom of the impoundment to lower the phreatic surface and reduce the driving head of seepage, unless tests show tailings are not amenable to such a system. Where in-situ dewatering is to be conducted, the impoundment bottom must be graded to assure that the drains are at a low point. The drains must be protected by suitable filter materials to assure that drains remain free running. The drainage system must also be adequately sized to assure good drainage).

(iv) Neutralization to promote immobilization of hazardous constituents.

(o) Where ground water impacts are occurring at an existing site due to seepage, action must be taken to alleviate conditions that lead to excessive seepage impacts and restore ground water quality. The specific seepage control and ground water protection method, or combination of methods, to be used must be worked out on a site-specific basis. Technical specifications must be prepared to control installation of seepage control systems. A quality assurance, testing, and inspection program, which includes supervision by a qualified engineer or scientist, must be established to assure the specifications are met.

(p) In support of a tailings disposal system proposal, the applicant/operator shall supply information concerning the following:

(i) The chemical and radioactive characteristics of the waste solutions.

(ii) The characteristics of the underlying soil and geologic formations particularly as they will control transport of contaminants and solutions. This includes detailed information concerning extent, thickness, uniformity, shape, and orientation of underlying strata. Hydraulic gradients and conductivities of the various formations must be determined. This information must be gathered from borings and field survey methods taken within the proposed impoundment area and in surrounding areas where contaminants might migrate to ground water. The information gathered on boreholes must include both geologic and geophysical logs in sufficient number and degree of sophistication to allow determining significant discontinuities, fractures, and channeled deposits of high hydraulic conductivity. If field survey methods are used, they should be in addition to and calibrated with borehole logging. Hydrologic parameters such as permeability may not be determined on the basis of laboratory analysis of samples alone; a sufficient amount of field testing (e.g., pump tests) must be conducted to assure actual field properties are adequately understood. Testing must be conducted to allow estimating chemi-sorption attenuation properties of underlying soil and rock.

(iii) Location, extent, quality, capacity and current uses of any ground water at and near the site.

(q) Steps must be taken during stockpiling of ore to minimize penetration of radionuclides into underlying soils; suitable methods include lining and/or compaction of ore storage areas.

(6) Criterion 6 - (a) In disposing of waste by-product material, licensees shall place an earthen cover (or approved alternative) over tailings or wastes at the end of milling operations and shall close the waste disposal area in accordance with a design[1] which provides reasonable assurance of control of radiological hazards to:

(i) Be effective for 1,000 years, to the extent reasonably achievable, and, in any case, for at least 200 years; and

(ii) Limit releases of Radon-222 from uranium by-product materials, and Radon-220 from thorium by-product materials, to the atmosphere so as not to exceed an average[2] release rate of 20 picocuries per square meter per second (pCi/m^2s) to the extent practicable throughout the effective design life determined pursuant to (a)(i) of this subsection (this criterion). In computing required tailings cover thicknesses, moisture in soils in excess of amounts found normally in similar soils in similar circumstances may not be considered. Direct gamma exposure from the tailings or wastes should be reduced to background levels. The effects of any thin synthetic layer may not be taken into account in determining the calculated radon exhalation level. If nonsoil materials are proposed as cover materials, it must be demonstrated that these materials will not crack or degrade by differential settlement, weathering, or other mechanism, over long-term intervals.

(b) As soon as reasonably achievable after emplacement of the final cover to limit releases of Radon-222 from uranium by-product material and prior to placement of erosion protection barriers or other features necessary for long-term control of the tailings, the licensees shall verify through appropriate testing and analysis that the design and construction of the final radon barrier is effective in limiting releases of Radon-222 to a level not exceeding 20 pCi/m^2s averaged over the entire pile or impoundment using the procedures described in 40 CFR part 61, appendix B, Method 115, or

another method of verification approved by the Nuclear Regulatory Commission as being at least as effective in demonstrating the effectiveness of the final radon barrier.

(c) When phased emplacement of the final radon barrier is included in the applicable reclamation plan, the verification of Radon-222 release rates required in (b) of this subsection (this criterion) must be conducted for each portion of the pile or impoundment as the final radon barrier for that portion is emplaced.

(d) Within ninety days of the completion of all testing and analysis relevant to the required verification in (b) and (c) of this subsection (this criterion), the uranium mill licensee shall report to the department the results detailing the actions taken to verify that levels of release of Radon-222 do not exceed 20 pCi/m^{2}s when averaged over the entire pile or impoundment. The licensee shall maintain records until termination of the license documenting the source of input parameters including the results of all measurements on which they are based, the calculations and/or analytical methods used to derive values for input parameters, and the procedure used to determine compliance. These records shall be kept in a form suitable for transfer to the custodial agency at the time of transfer of the site to DOE or a state for long-term care if requested.

(e) Near surface cover materials (i.e., within the top three meters) may not include waste or rock that contains elevated levels of radium; soils used for near surface cover must be essentially the same, as far as radioactivity is concerned, as that of surrounding surface soils. This is to ensure that surface radon exhalation is not significantly above background because of the cover material itself.

(f) The design requirements in this criterion for longevity and control of radon releases apply to any portion of a licensed and/or disposal site unless such portion contains a concentration of radium in land, averaged over areas of 100 square meters, which, as a result of by-product material, does not exceed the background level by more than:

(i) 5 picocuries per gram (pCi/g) of radium-226, or, in the case of thorium by-product material, radium-228, averaged over the first 15 centimeters (cm) below the surface; and

(ii) 15 pCi/g of radium-226, or, in the case of thorium by-product material, radium-228, averaged over 15-cm thick layers more than 15 cm below the surface.

(g) By-product material containing concentrations of radionuclides other than radium in soil, and surface activity on remaining structures, must not result in a total effective dose equivalent (TEDE) exceeding the dose from cleanup of radium contaminated soil to the standard (benchmark dose) contained in (f) of this subsection, and must be at levels which are as low as is reasonably achievable (ALARA). If more than one residual radionuclide is present in the same 100 square meter area, the sum of the ratios for each radionuclide of concentration present to the concentration limit will not exceed "1" (unity). A calculation of the potential peak annual TEDE within 1000 years to the average member of the critical group that would result from applying the radium standard, not including radon, on the site must be submitted for approval. The use of decommissioning plans with benchmark doses which exceed 100 mrem/yr, before application of ALARA, requires the approval of the department. This requirement for dose criteria does not apply to sites that have decommissioning plans for soil and structures approved before June 11, 1999.

(h) The licensee shall also address the nonradiological hazards associated with the wastes in planning and implementing closure. The licensee shall ensure that disposal areas are closed in a manner that minimizes the need for further maintenance. To the extent necessary to prevent threats to human health and the environment, the licensee shall control, minimize, or eliminate post-closure escape of nonradiological hazardous constituents, leachate, contaminated rainwater, or waste decomposition products to the ground or surface waters or to the atmosphere.

[1] In the case of thorium by-product materials, the standard applies only to design. Monitoring for radon emissions from thorium by-product materials after installation of an appropriately designed cover is not required.

[2] This average applies to the entire surface of each disposal area over a period of at least one year, but a period short compared to 100 years. Radon will come from both by-product materials and from covering materials. Radon emissions from covering materials should be estimated as part of developing a closure plan for each site. The standard, however, applies only to emissions from by-product materials to the atmosphere.

Criterion 6A - (a) For impoundments containing uranium by-product materials, the final radon barrier must be completed as expeditiously as practicable considering technological feasibility after the pile or impoundment ceases operation in accordance with a written, department-approved reclamation plan. (The term as expeditiously as practicable considering technological feasibility as specifically defined in WAC 246-252-010 includes factors beyond the control of the licensee.) Deadlines for completion of the final radon barrier and, if applicable, the following interim milestones must be established as a condition of the individual license: Windblown tailings retrieval and placement on the pile and interim stabilization (including dewatering or the removal of free-standing liquids and recontouring). The placement of erosion protection barriers or other features necessary for long-term control of the tailings must also be completed in a timely manner in accordance with a written, approved reclamation plan.

(b) The department may approve a licensee's request to extend the time for performance of milestones related to emplacement of the final radon barrier if, after providing an opportunity for public participation, the department finds that the licensee has adequately demonstrated in the manner required in subsection (6)(b) of this section (Criterion 6) that releases of Radon-222 do not exceed an average of 20 pCi/m^{2}s. If the delay is approved on the basis that the radon releases do not exceed 20 pCi/m^{2}s, a verification of radon levels, as required by subsection (6)(b) of this section (Criterion 6), must be made annually during the period of delay. In addition, once the department has established the date in the reclamation plan for the milestone for completion of the final radon barrier, the department may extend that date based on cost if, after providing an opportunity for public participation, the department finds that the licensee is making good faith efforts to emplace the final radon barrier, the delay is consistent with the definitions of available technology, and the radon releases caused by the delay will not result in a significant incremental risk to the public health.

(c) The department may authorize by license amendment, upon licensee request, a portion of the impoundment to accept uranium by-product material or such materials that are similar in physical, chemical, and radiological characteristics to the uranium mill tailings and associated wastes already in the pile or impoundment from other sources, during the closure process. No such authorization will be made if it results in a delay or impediment to emplacement of the final radon barrier over the remainder of the impoundment in a manner that will achieve levels of Radon-222 releases not exceeding 20 pCi/m^{2}s averaged over the entire impoundment. The verification required in subsection (6)(b) of this section (Criterion 6) may be completed with a portion of the impoundment being used for further disposal if the department makes a final finding that the impoundment will continue to achieve a level of Radon-222 releases not exceeding 20 pCi/m^{2}s averaged over the entire impoundment. In this case, after the final radon barrier is complete except for the continuing disposal area:

(i) Only by-product material will be authorized for disposal;

(ii) The disposal will be limited to the specified existing disposal area; and

(iii) This authorization will only be made after providing opportunity for public participation.

Reclamation of the disposal area, as appropriate, must be completed in a timely manner after disposal operations cease in accordance with subsection (6)(a) of this section (Criterion 6); however, these actions are not required to be complete as part of meeting the deadline for final radon barrier construction.

(7) Criterion 7 - At least one full year prior to any major site construction, a preoperational monitoring program must be conducted to provide complete baseline data on a milling site and its environs. Throughout the construction and operating phases of the mill, an operational monitoring program must be conducted to complete the following:

(a) To measure or evaluate compliance with applicable standards and regulations;

(b) To evaluate performance of control systems and procedures;

(c) To evaluate environmental impacts of operation; and

(d) To detect potential long-term effects.

The licensee shall establish a detection monitoring program needed for the department to set the site-specific ground water protection standards in Criterion 5 of this section. For all monitoring under this paragraph, the licensee or applicant will propose for department approval as license conditions, which constituents are to be monitored on a site-specific basis. A detection monitoring program has two purposes. The initial purpose of the program is to detect leakage of hazardous constituents from the disposal area so that the need to set ground water protection standards is monitored. If leakage is detected, the second purpose of the program is to generate data and information needed for the department to establish the standards under Criterion 5. The data and information must provide a sufficient basis to identify those hazardous constituents which require concentration limit standards and to enable the department to set the limits for those constituents and the compliance period. They may also need to provide the basis for adjustments to the point of compliance. For licenses in effect September 30, 1983, the detection monitoring programs must have been in place by October 1, 1984. For licenses issued after September 30, 1983, the detection monitoring programs must be in place when specified by the department in orders or license conditions. Once ground water protection standards have been established pursuant to Criterion 5, the licensee shall establish and implement a compliance monitoring program. The purpose of the compliance monitoring program is to determine that the hazardous constituent concentrations in ground water continue to comply with the standards set by the department. In conjunction with a corrective action program, the licensee shall establish and implement a corrective action monitoring program. The purpose of the corrective action monitoring program is to demonstrate the effectiveness of the corrective actions. Any monitoring program required by this paragraph may be based on existing monitoring programs to the extent the existing programs can meet the stated objective for the program.

(8) Criterion 8 - Milling operations shall be conducted so that all airborne effluent releases are reduced to as low as is reasonably achievable. The primary means of accomplishing this shall be by means of emission controls. Institutional controls, such as extending the site boundary and exclusion area, may be employed to ensure that offsite exposure limits are met, but only after all practicable measures have been taken to control emissions at the source. Notwithstanding the existence of individual dose standards, strict control of emissions is necessary to assure that population exposures are reduced to the maximum extent reasonably achievable and to avoid site contamination. The greatest potential sources of offsite radiation exposure (aside from radon exposure) are dusting from dry surfaces of the tailings disposal area not covered by tailings solution and emissions from yellowcake drying and packaging operations. During operations and prior to closure, radiation doses from radon emissions from surface impoundments shall be kept as low as is reasonably achievable. Checks shall be made and logged hourly of all parameters (e.g., differential pressure and scrubber water flow rate) which determine the efficiency of yellowcake stack emission control equipment operation. It shall be determined whether or not conditions are within a range prescribed to ensure that the equipment is operating consistently near peak efficiency; corrective action shall be taken when performance is outside of prescribed ranges. Effluent control devices shall be operative at all times during drying and packaging operations and whenever air is exhausting from the yellowcake stack.

Drying and packaging operations shall terminate when controls are inoperative. When checks indicate the equipment is not operating within the range prescribed for peak efficiency, actions shall be taken to restore parameters to the prescribed range. When this cannot be done without shutdown and repairs, drying and packaging operations shall cease as soon as practicable.

Operations may not be restarted after cessation due to off-normal performance until needed corrective actions have been identified and implemented. All such cessations, corrective actions, and restarts shall be reported to the department in writing, within ten days of the subsequent restart.

To control dusting from tailings, that portion not covered by standing liquids shall be wetted or chemically stabilized to

prevent or minimize blowing and dusting to the maximum extent reasonably achievable. This requirement may be relaxed if tailings are effectively sheltered from wind, such as may be the case where they are disposed of below grade and the tailings surface is not exposed to wind. Consideration shall be given in planning tailings disposal programs to methods which would allow phased covering and reclamation of tailings impoundments since this will help in controlling particulate and radon emissions during operation. To control dustings from diffuse sources, such as tailings and ore pads where automatic controls do not apply, operators shall develop written operating procedures specifying the methods of control which will be utilized.

Milling operations producing or involving thorium by-product material shall be conducted in such a manner as to provide reasonable assurance that the annual dose equivalent does not exceed twenty-five millirems to the whole body, seventy-five millirems to the thyroid, and twenty-five millirems to any other organ of any member of the public as a result of exposures to the planned discharge of radioactive materials, Radon-220 and its daughters excepted, to the general environment.

Uranium and thorium by-product materials shall be managed so as to conform to the applicable provisions of Title 40 of the Code of Federal Regulations, Part 440, Ore Mining and Dressing Point Source Category: Effluent Limitations Guidelines and New Source Performance Standards, Subpart C, Uranium, Radium, and Vanadium Ores Subcategory, as codified on January 1, 1983.

The licensee shall establish a detection monitoring program needed to establish the ground water protection standards in subsection (5)(f) of this section. A detection monitoring program has two purposes. The initial purpose of the program is to detect leakage of hazardous constituents from the disposal area so that the need to set ground water protection standards is monitored. If leakage is detected, the second purpose of the program is to generate data and information needed for the department to establish the standards under subsection (5)(f) of this section. The data and information must provide a sufficient basis to identify those hazardous constituents which require concentration limit standards and to enable the department to set the limits for those constituents and the compliance period. They may also need to provide the basis for adjustments to the point of compliance. For licenses in effect September 30, 1983, the detection monitoring programs must have been in place by October 1, 1984. For licenses issued after September 30, 1983, the detection monitoring programs must be in place when specified by the department in orders or license conditions. Once ground water protection standards have been established pursuant to subsection (5)(f) of this section, the licensee shall establish and implement a compliance monitoring program. The purpose of the compliance monitoring program is to determine that the hazardous constituent concentrations in ground water continue to comply with the standards set by the department. In conjunction with a corrective action program, the licensee shall establish and implement a corrective action monitoring program. The purpose of the corrective action monitoring program is to demonstrate the effectiveness of the corrective actions. Any monitoring program required by this paragraph may be based on existing monitoring programs to the extent the existing programs can meet the stated objective for the program.

Daily inspections of tailings or waste retention systems must be conducted by a qualified engineer or scientist and documented. The department must be immediately notified of any failure in a tailings or waste retention system which results in a release of tailings or waste into unrestricted areas, and/or of any unusual conditions (conditions not contemplated in the design of the retention system) which if not corrected could indicate the potential or lead to failure of the system and result in a release of tailings or waste into unrestricted areas.

(9) Criterion 9 - (a) Pursuant to chapter 70.121 RCW, and except as otherwise provided, financial surety arrangements for site reclamation and long-term surveillance and control which may consist of surety bonds, cash deposits, certificates of deposit, deposits of government securities, irrevocable letters or lines of credit, or any combination of the above, or other arrangements approved by the department, milling operations shall be established for source material to ensure the protection of the public health and safety in the event of abandonment, default, or other inability of the licensee to meet the requirements of the act and these regulations.

(i) The amount of funds to be ensured by such surety arrangements shall be based on department-approved cost estimates.

(ii) Self-insurance, or any arrangement which essentially constitutes self-insurance (e.g., a contract with a state or federal agency), will not satisfy the surety requirement, since this provides no additional assurance other than that which already exists through license requirements.

(b) The arrangements required in (a) of this subsection shall be established prior to commencement of operations to assure that sufficient funds will be available to carry out decontamination and decommissioning of the facility.

(c) Amendments to licenses in effect on the effective date of this regulation may be issued, providing that the required surety arrangements are established within ninety days after the effective date of this subsection.

(d) For source material milling operations, the amount of funds to be ensured by such surety arrangements shall be based on department-approved cost estimates in an approved plan for (i) decontamination and decommissioning of mill buildings and the milling site to levels which would allow unrestricted use of these areas upon decommissioning, and (ii) the reclamation of tailings and/or waste disposal areas in accordance with the technical criteria delineated in this section. The licensee shall submit this plan in conjunction with an environmental report that addresses the expected environmental impacts of the milling operation, decommissioning and tailings reclamation, and evaluates alternatives for mitigating these impacts. In addition, the surety shall cover the payment of the charge for long-term surveillance and control required by the department. In establishing specific surety arrangements, the licensee's cost estimates shall take into account total costs that would be incurred if an independent contractor were hired to perform the decommissioning and reclamation work. In order to avoid unnecessary duplication and expense, the department may accept financial sureties that have been consolidated with financial or surety arrange-

ments established to meet requirements of other federal or state agencies and/or local governing bodies for such decommissioning, decontamination, reclamation, and long-term site surveillance, provided such arrangements are considered adequate to satisfy these requirements and that portion of the surety which covers the decommissioning and reclamation of the mill, mill tailings site and associated areas, and the long-term funding charge is clearly identified and committed for use in accomplishing these activities. The licensee's surety mechanism will be reviewed annually by the department to assure that sufficient funds will be available for completion of the reclamation plan if the work had to be performed by an independent contractor. The amount of surety liability should be adjusted to recognize any increases or decreases resulting from inflation, changes in engineering plans, activities performed, and any other conditions affecting costs. Regardless of whether reclamation is phased through the life of the operation or takes place at the end of operations, an appropriate portion of surety liability shall be retained until final compliance with the reclamation plan is determined. This will yield a surety that is at least sufficient at all times to cover the costs of decommissioning and reclamation of the areas that are expected to be disturbed before the next license renewal. The term of the surety mechanism must be open ended, unless it can be demonstrated that another arrangement would provide an equivalent level of assurance. This assurance could be provided with a surety instrument which is written for a specific period of time (e.g., five years), yet which must be automatically renewed unless the surety notifies the beneficiary (the state regulatory agency) and the principal (the licensee) some reasonable time (e.g., ninety days) prior to the renewal date of their intention not to renew. In such a situation, the surety requirement still exists and the licensee would be required to submit an acceptable replacement surety within a brief period of time to allow at least sixty days for the department to collect.

Proof of forfeiture must not be necessary to collect the surety so that in the event that the licensee could not provide an acceptable replacement surety within the required time, the surety shall be automatically collected prior to its expiration. The conditions described above would have to be clearly stated on any surety instrument which is not open-ended and must be agreed to by all parties.

Long-term care requirements. Pursuant to chapter 70.121 RCW, and as otherwise provided in WAC 246-235-086(4), a long-term care trust fund shall be established by source material milling licensees prior to the issuance of the license.

(10) Criterion 10 - (a) A minimum charge of two hundred fifty thousand dollars (1978 United States dollars) accrued as specified in WAC 246-235-086(4) to cover the costs of long-term surveillance shall be paid by each mill operator to the agency prior to the termination of a uranium or thorium mill license. If site surveillance or control requirements at a particular site are determined, on the basis of a site-specific evaluation, to be significantly greater than those specified in (a) of this subsection (e.g., if fencing is determined to be necessary), variance in funding requirements may be specified by the department. The total charge to cover the costs of long-term surveillance shall be such that, with an assumed one percent annual real interest rate, the collected funds will yield interest in an amount sufficient to cover the annual costs of site surveillance. The charge will be adjusted annually prior to actual payments to recognize inflation. The inflation rate to be used is that indicated by the change in the consumer price index published by the United States Department of Labor, Bureau of Labor Statistics. Contributions by a licensee to the long-term care trust fund pursuant to chapter 70.121 RCW shall be transferred to cover the costs assessed under this criterion.

(11) Criterion 11 - These criteria relating to ownership of tailings and their disposal sites become effective on November 8, 1981, and apply to all licenses terminated, issued, or renewed after that date.

Any uranium or thorium milling license or tailings license shall contain such terms and conditions as the United States Nuclear Regulatory Commission determines necessary to assure that prior to termination of the license, the licensee will comply with ownership requirements of this criterion for sites used for tailings disposal.

Title to the by-product material licensed pursuant to WAC 246-252-030 and land, including any interests therein (other than land owned by the United States or by the state of Washington) which is used for the disposal of any such by-product material, or is essential to ensure the long-term stability of such disposal site, shall be transferred to the United States or the state of Washington. In view of the fact that physical isolation must be the primary means of long-term control, and government land ownership is a desirable supplementary measure, ownership of certain severable subsurface interests (for example, mineral rights) may be determined to be unnecessary to protect the public health and safety and the environment. In any case, the applicant/operator must demonstrate a serious effort to obtain such subsurface rights, and must, in the event that certain rights cannot be obtained, provide notification in local public land records of the fact that the land is being used for the disposal of radioactive material and is subject to either a United States Nuclear Regulatory Commission general or specific license prohibiting the disruption and disturbance of the tailings. In some rare cases, such as may occur with deep burial where no ongoing site surveillance will be required, surface land ownership transfer requirements may be waived. For licenses issued before November 8, 1981, the United States Nuclear Regulatory Commission may take into account the status of the ownership of such land, and interests therein, and the ability of a licensee to transfer title and custody thereof to the United States or the state. If the United States Nuclear Regulatory Commission, subsequent to title transfer, determines that use of the surface or subsurface estates, or both, of the land transferred to the United States or to a state will not endanger the public health, safety, welfare or environment, the United States Nuclear Regulatory Commission may permit the use of the surface or subsurface estates, or both, of such land in a manner consistent with the provisions provided in these criteria. If the United States Nuclear Regulatory Commission permits such use of such land, it will provide the person who transferred such land with the right of first refusal with respect to such use of such land.

Material and land transferred to the United States or a state in accordance with this criterion must be transferred

without cost to the United States or a state other than administrative and legal costs incurred in carrying out such transfer.

The provisions of this part, respecting transfer of title and custody to land and tailings and wastes, do not apply in the case of lands held in trust by the United States for any Indian tribe, or lands owned by such Indian tribe subject to a restriction against alienation imposed by the United States. In the case of such lands which are used for the disposal of byproduct material, as defined in this section, the licensee shall enter into arrangements with the United States Nuclear Regulatory Commission as may be appropriate to assure the long-term surveillance of such lands by the United States.

(12) Criterion 12 - The final disposition of tailings or wastes at milling sites should be such that ongoing active maintenance is not necessary to preserve isolation. As a minimum, annual site inspections must be conducted by the government agency retaining ultimate custody of the site where tailings or wastes are stored, to confirm the integrity of the stabilized tailings or waste systems, and to determine the need, if any, for maintenance and/or monitoring. Results of the inspection must be reported to the United States Nuclear Regulatory Commission within sixty days following each inspection. The United States Nuclear Regulatory Commission may require more frequent site inspections if, on the basis of a site-specific evaluation, such a need appears necessary, due to the features of a particular tailings or waste disposal system.

(13) Criterion 13 - Secondary ground water protection standards required by Criterion 5 of this section are concentration limits for individual hazardous constituents. The list of constituents found in Appendix A of this chapter, chapter 246-252 WAC, identifies the constituents for which standards must be set and complied with if the specific constituent is reasonably expected to be in or derived from the byproduct material and has been detected in ground water. For purposes of this criterion, the property of gross alpha activity will be treated as if it is a hazardous constituent. Thus, when setting standards under subsection (5)(j) of this section, the department will also set a limit for gross alpha activity.

[Statutory Authority: RCW 70.98.050 and 70.98.080. 02-17-005, § 246-252-030, filed 8/8/02, effective 9/8/02. Statutory Authority: RCW 70.98.-050. 00-08-013, § 246-252-030, filed 3/24/00, effective 4/24/00; 97-13-055, § 246-252-030, filed 6/16/97, effective 7/17/97; 94-01-073, § 246-252-030, filed 12/9/93, effective 1/9/94. Statutory Authority: RCW 70.98.050 and 70.98.080. 91-16-109 (Order 187), § 246-252-030, filed 8/7/91, effective 9/7/91. Statutory Authority: RCW 43.70.040. 91-02-049 (Order 121), recodified as § 246-252-030, filed 12/27/90, effective 1/31/91. Statutory Authority: RCW 70.98.080. 87-01-031 (Order 2450), § 402-52-100, filed 12/11/86. Statutory Authority: Chapter 70.121 RCW. 81-16-031 (Order 1683), § 402-52-100, filed 7/28/81.]

WAC 246-252-040 Continuing dose assessment. Each uranium or thorium milling operation shall submit in writing to the department by May 1 and November 1 of each year, reports specifying the quantities of each of the principle radionuclides released to unrestricted areas in liquid and in gaseous effluent during the previous six months of operations. This data shall be reported in a manner that will permit the department to confirm the potential annual radiation doses to the public. All data from the radiological and nonradiological environmental monitoring program will also be submitted for the same time period and frequency as specified above. The data shall be reported in a manner which will allow the department to confirm the potential annual radiation doses to the public. In addition, the report due each May 1 shall include a dose assessment to assure compliance with 40 CFR 190 Environmental Radiation Protection Standards for Nuclear Power Operation and an annual land use survey to include but not be limited to water supply information, location and number of occupants, time spent at each location by occupants, amount and type of locally grown stored feed and amount of pasture consumed by local livestock.

[Statutory Authority: RCW 43.70.040. 91-02-049 (Order 121), recodified as § 246-252-040, filed 12/27/90, effective 1/31/91. Statutory Authority: Chapter 70.121 RCW. 81-16-031 (Order 1683), § 402-52-200, filed 7/28/81.]

WAC 246-252-050 Appendix A.

Hazardous Constituents

Acetonitrile (Ethanenitrile)
Acetophenone (Ethanone, 1-phenyl)
3-(alpha-Acetonylbenzyl)-4-hydroxycoumarin and salts (Warfarin)
2-Acetylaminofluorene (Acetamide, N-(9H-fluoren-2-yl)-)
Acetyl chloride (Ethanoyl chloride)
1-Acetyl-2-thiourea (Acetamide, N-(aminothioxomethyl)-)
Acrolein (2-Propenal)
Acrylamide (2-Propenamide)
Acrylonitrile (2-Propenenitrile)
Aflatoxins
Aldrin (1,2,3,4,10,10-Hexachloro-1,4,4a,5,8,8a,8b-hexahydro-endo, exo-1,4:5,8-Dimethanonaphthalene)
Allyl alcohol (2-Propen-1-ol)
Aluminum phosphide
4-Aminobiphenyl ([1,1'-Biphenyl]-4-amine)
6-Amino-1,1a,2,8,8a,8b-hexahydro-8-(hydroxymethyl)-8a-methoxy-5-methyl-carbamate azirino[2',3':3,4] pyrrolo [1,2-a] indole-4,7-dione, (ester) (Mitomycin C) (Azirino[2'3':3,4] pyrrolo (1,2-a) indole-4,7-dione, 6-amino-8-[((amino-cabonyl)oxy)methyl]-1,1a,2,8,8a,8b-hexahydro-8a methoxy-5-methy-)
5-(Aminomethyl)-3-isoxazolol (3(2H)-Isoxazolone, 5-(aminomethyl)-) 4-Aminopyridine (4-Pyridinamine)
Amitrole (1H-1,2,4-Triazol-3-amine)
Aniline (Benzenamine)
Antimony and compounds, N.O.S.*
Aramite (Sulfurous acid, 2-chloroethyl-, 2-[4-(1,1-dimethylethyl) phenoxy]-1-methylethyl ester)
Arsenic and compounds, N.O.S.*
Arsenic acid (Orthoarsenic acid)
Arsenic pentoxide (Arsenic (V) oxide)
Arsenic trioxide (Arsenic (III) oxide)
Auramine (Benzenamine, 4,4'-carbonimidoylbis [N,N-Dimethyl-, monohydrochloride)
Azaserine (L-Serine, diazoacetate (ester))
Barium and compounds, N.O.S.*
Barium cyanide
Benz[c]acridine (3,4-Benzacridine)
Benz[a]anthracene (1,2-Benzanthracene)
Benzene (Cyclohexatriene)
Benzenearsonic acid (Arsonic acid, phenyl-)
Benzene, dichloromethyl- (Benzal chloride)
Benzenethiol (Thiophenol)
Benzidine ([1,1'-Biphenyl]-4,4'diamine)
Benzo[b]fluoranthene (2,3-Benzofluoranthene)
Benzo[j]fluoranthene (7,8-Benzofluoranthene)
Benzo[a]pyrene (3,4-Benzopyrene)
p-Benzoquinone (1,4-Cyclohexadienedione)
Benzotrichloride (Benzene, trichloromethyl)
Benzyl chloride (Benzene, (chloromethyl)-)
Beryllium and compounds, N.O.S.*
Bis(2-chloroethoxy)methane (Ethane, 1,1'-[methylenebis(oxy)]bis[2-chloro-])
Bis(2-chloroethyl) ether (Ethane, 1,1'-oxybis[2-chloro-])
N,N-Bis(2-chloroethyl)-2-naphthylamine (Chlornaphazine)

Hazardous Constituents

Bis(2-chloroisopropyl) ether (Propane, 2,2'-oxybis[2-chloro-])
Bis(chloromethyl) ether (Methane, oxybis[chloro-])
Bis(2-ethylhexyl) phthalate (1,2-Benzenedicarboxylic acid, bis(2-ethylhexyl) ester)
Bromoacetone (2-Propanone, 1-bromo-)
Bromomethane (Methyl bromide)
4-Bromophenyl phenyl ether (Benzene, 1-bromo-4-phenoxy-)
Brucine (Strychnidin-10-one, 2,3-dimethoxy-)
2-Butanone peroxide (Methyl ethyl ketone, peroxide)
Butyl benzyl phthalate (1,2-Benzenedicarboxylic acid, butyl phenylmethyl ester)
2-sec-Butyl-4,6-dinitrophenol (DNBP) (Phenol, 2,4-dinitro-6-(1-methylpropyl)-)
Cadmium and compounds, N.O.S.*
Calcium chromate (Chromic acid, calcium salt)
Calcium cyanide
Carbon disulfide (Carbon bisulfide)
Carbon oxyfluoride (Carbonyl fluoride)
Chloral (Acetaldehyde, trichloro-)
Chlorambucil (Butanoic acid, 4-[bis(2-chloroethyl)amino]benzene-)
Chlordane (alpha and gamma isomers) (4,7-Methanoindan, 1,2,4,5,6,7,8,8-octachloro-3,4,7,7a-tetrahydro-) (alpha and gamma isomers)
Chlorinated benzenes, N.O.S.*
Chlorinated ethane, N.O.S.*
Chlorinated fluorocarbons, N.O.S.*
Chlorinated naphthalene, N.O.S.*
Chlorinated phenol, N.O.S.*
Chloroacetaldehyde (Acetaldehyde, chloro-)
Chloroalkyl ethers, N.O.S.*
p-Chloroaniline (Benzenamine, 4-chloro-)
Chlorobenzene (Benzene, chloro-)
Chlorobenzilate (Benzeneacetic acid, 4-chloro-alpha-(4-chlorophenyl)-alpha-hydroxy-, ethyl ester)
p-Chloro-m-cresol (Phenol, 4-chloro-3-methyl)
1-Chloro-2,3-epoxypropane (Oxirane, 2-(chloromethyl)-)
2-Chloroethyl vinyl ether (Ethene, (2-chloroethoxy)-)
Chloroform (Methane, trichloro-)
Chloromethane (Methyl chloride)
Chloromethyl methyl ether (Methane, chloromethoxy-)
2-Chloronaphthalene (Naphthalene, betachloro-)
2-Chlorophenol (Phenol, o-chloro-)
1-(o-Chlorophenyl)thiourea (Thiourea, (2-chlorophenyl)-)
3-Chloropropionitrile (Propanenitrile, 3-chloro-)
Chromium and compounds, N.O.S.*
Chrysene (1,2-Benzphenanthrene)
Citrus red No. 2 (2-Naphthol, 1-[(2,5-dimethoxyphenyl)azo]-)
Coal tars
Copper cyanide
Creosote (Creosote, wood)
Cresols (Cresylic acid) (Phenol, methyl-)
Crotonaldehyde (2-Butenal)
Cyanides (soluble salts and complexes), N.O.S.*
Cyanogen (Ethanedinitrile)
Cyanogen bromide (Bromide cyanide)
Cyanogen chloride (Chlorine cyanide)
Cycasin(beta-D-Glucopyranoside, (methyl-ONN-azoxy)methyl-)
2-Cyclohexyl-4,6-dinitrophenol (Phenol, 2-cyclohexyl-4,6-dinitro-)
Cyclophosphamide (2H-1,3,2, -Oxazaphosphorine, [bis(2-chloroethyl) amino]-tetrahydro-,2-oxide)
Daunomycin (5,12-Naphthacenedione, (8S-cis)-8-acetyl-10-[(3-amino-2,3,6-trideoxy)-alpha-L-lyxo-hexopyranosyl)oxy]-7,8,9,10-tetrahydro-6,8,11-trihydroxy-1-methox y-)
DDD (Dichlorodiphenyldichloroethane) (Ethane, 1,1-dichloro-2,2-bis(p-chlorophenyl)-)
DDE (Ethylene, 1,1-dichloro-2,2-bis(4-chlorophenyl)-)
DDT (Dichlorodiphenyltrichloroethane) (Ethane, 1,1,1-trichloro-2,2-bis(p-chlorophenyl)-)
Diallate (S-(2,3-dichloroallyl) diisopropylthiocarbamate)
Dibenz[a,h]acridine (1,2,5,6-Dibenzacridine)
Dibenz[a,j]acridine (1,2,7,8-Dibenzacridine)
Dibenz[a,h]anthracene (1,2,5,6-Dibenzanthracene)
7H-Dibenzo[c,g]carbazole (3,4,5,6-Dibenzcarbazole)
Dibenzo[a,e]pyrene (1,2,4,5-Dibenzpyrene)
Dibenzo[a,h]pyrene (1,2,5,6-Dibenzpyrene)

Hazardous Constituents

Dibenzo[a,i]pyrene (1,2,7,8-Dibenzpyrene)
1,2-Dibromo-3-chloropropane (Propane, 1,2-dibromo-3-chloro-)
1,2-Dibromoethane (Ethylene dibromide)
Dibromomethane (Methylene bromide)
Di-n-butyl phthalate (1,2-Benzenedicarboxylic acid, dibutyl ester)
o-Dichlorobenzene (Benzene, 1,2-dichloro-)
m-Dichlorobenzene (Benzene, 1,3-dichloro-)
p-Dichlorobenzene (Benzene, 1,4-dichloro-)
Dichlorobenzene, N.O.S.* (Benzene, dichloro-, N.O.S.*)
3,3'-Dichlorobenzidine ([1,1'-Biphenyl]-4,4'-diamine, 3,3'-dichloro-)
1,4-Dichloro-2-butene (2-Butene, 1,4-dichloro-)
Dichlorodifluoromethane (Methane, dichlorodifluoro-)
1,1-Dichloroethane (Ethylidene dichloride)
1,2-Dichloroethane (Ethylene dichloride)
trans-1,2-Dichloroethene (1,2-Dichloroethylene)
Dichloroethylene, N.O.S.* (Ethene, dichloro-, N.O.S.*)
1,1-Dichloroethylene (Ethene, 1,1-dichloro-)
Dichloromethane (Methylene chloride)
2,4-Dichlorophenol (Phenol, 2,4-dichloro-)
2,6-Dichlorophenol (Phenol, 2,6-dichloro-)
2,4-Dichlorophenoxyacetic acid (2,4-D), salts and esters (Acetic acid, 2,4-dichlorophenoxy-, salts and esters)
Dichlorophenylarsine (Phenyl dichloroarsine)
Dichloropropane, N.O.S.* (Propane, dichloro-, N.O.S.*)
1,2-Dichloropropane (Propylene dichloride)
Dichloropropanol, N.O.S.* (Propanol, dichloro-, N.O.S.*)
Dichloropropene, N.O.S.* (Propene, dichloro-, N.O.S.*)
1,3-Dichloropropene (1-Propene, 1,3-dichloro-)
Dieldin (1,2,3,4,10,10-hexachloro-6,7-epoxy-1,4,4a,5,6,7,8,8a-octa-hydro-endo, exo-1,4:5,8-Dimethanonaphthalene)
1,2:3,4-diepoxybutane (2,2'-Bioxirane)
Diethylarsine (Arsine, diethyl-)
N,N-Diethylhydrazine (Hydrazine, 1,2-diethyl)
O,O-Diethyl S-methyl ester of phosphorodithioic acid (Phosphorodithioic acid, O,O-diethyl S-methyl ester)
O,O-Diethylphosphoric acid, O-p-nitrophenyl ester (Phosphoric acid, diethyl p-nitrophenyl ester)
Diethyl phthalate (1,2-Benzenedicarboxylic acid, diethyl ester)
O,O-Diethyl O-2-pyrazinyl phosphorothioate (Phosphorothioic acid, O,O-diethyl O-pyrazinyl ester)
Diethylstilbesterol (4,4'-Stilbenediol, alpha, alpha-diethyl, bis(dihydrogen phosphate, (E)-)
Dihydrosafrole (Benzene, 1,2-methylenedioxy-4-propyl-)
3,4-Dihydroxy-alpha-(methylamino)methyl benzyl alcohol (1,2-Benzenediol, 4-[1-hydroxy-2-(methylamino)ethyl]-)
Dilsopropylfluorophosphate (DFP) (Phosphorofluoridic acid, bis(1-methylethyl) ester)
Dimethoate (Phosphorodithioic acid, O,O-dimethyl S-[2-(methylamino)-2-oxoethyl] ester)
3,3'-Dimethoxybenzidine ([1,1'-Biphenyl]-4,4'-diamine, 3-3'-di-methoxy-)
p-Dimethylaminoazobenzene (Benzenamine, N,N-dimethyl-4-(phenylazo)-)
7,12-Dimethylbenz[a]anthracene (1,2-Benzanthracene, 7,12-dimethyl-)
3,3'-Dimethylbenzidine ([1,1'-Biphenyl]-4,4'-diamine, 3,3'-dimethyl-)
Dimethylcarbamoyl chloride (Carbamoyl chloride, dimethyl-)
1,1-Dimethylhydrazine (Hydrazine, 1,1-dimethyl-)
1,2-Dimethylhydrazine (Hydrazine, 1,2-dimethyl-)
3,3-Dimethyl-1-(methylthio)-2-butanone, O-[(methylamino) carbonyl] oxime (Thiofanox)
alpha, alpha-Dimethylphenethylamine (Ethanamine, 1,1-dimethyl-2-phenyl-)
2,4-Dimethylphenol (Phenol, 2,4-dimethyl-)
Dimethyl phthalate (1,2-Benzenedicarboxylic acid, dimethyl ester)
Dimethyl sulfate (Sulfuric acid, dimethyl ester)
Dinitrobenzene, N.O.S.* (Benzene, dinitro-, N.O.S.*)
4,6-Dinitro-o-cresol and salts (Phenol, 2,4-dinitro-6-methyl-, and salts)
2,4-Dinitrophenol (Phenol, 2,4-dinitro-)
2,4-Dinitrotoluene (Benzene, 1-methyl-2,4-dinitro-)
2,6-Dinitrotoluene (Benzene, 1-methyl-2,6-dinitro-)
Di-n-octyl phthalate (1,2-Benzenedicarboxylic acid, dioctyl ester)
1,4-Dioxane (1,4-Diethylene oxide)
Diphenylamine (Benzenamine, N-phenyl-)
1,2-Diphenylhydrazine (Hydrazine, 1,2-diphenyl-)
Di-n-propylnitrosamine (N-Nitroso-di-n-propylamine)

Hazardous Constituents

Disulfoton (O,O-diethyl S-[2-(ethylthio)ethyl] phosphorodithioate)
2,4-Dithiobiuret (Thioimidodicarbonic diamide)
Endosulfan (5-Norbornene, 2,3-dimethanol, 1,4,5,6,7,7-hexachloro-, cyclic sulfite)
Endrin and metabolites (1,2,3,4,10,10-hexachloro-6,7-epoxy-1,4,4a,5,6, 7,8,8a-octahydro-endo,endo-1,4:5,8-dimethanonaphthalene, and metabolites)
Ethyl carbamate (Urethan) (Carbamic acid, ethyl ester)
Ethyl cyanide (propanenitrile)
Ethylenebisdithiocarbamic acid, salts and esters
(1,2-Ethanediylbiscarbamodithioic acid, salts and esters)
Ethyleneimine (Aziridine)
Ethylene oxide (Oxirane)
Ethylenethiourea (2-Imidazolidinethione)
Ethyl methacrylate (2-Propenoic acid, 2-methyl-, ethyl ester)
Ethyl methanesulfonate (Methanesulfonic acid, ethyl ester)
Fluoranthene (Benzo[j,k]fluorene)
Fluorine
2-Fluoroacetamide (Acetamide, 2-fluoro-)
Fluoroacetic acid, sodium salt (Acetic acid, fluoro-, sodium salt)
Formaldehyde (Methylene oxide)
Formic acid (Methanoic acid)
Glycidylaldehyde (1-Propanol-2,3-epoxy)
Halomethane, N.O.S.*
Heptachlor (4,7-Methano-1H-indene, 1,4,5,6,7,8,8-heptachloro-3a,4,7,7a-tetrahydro-)
Heptachlor epoxide (alpha, beta, and gamma isomers) (4,7-Methano-1H-indene, 1,4,5,6,7,8,8-heptachloro-2,3-epoxy-3a,4,7,7-tetrahydro-, alpha, beta, and gamma isomers)
Hexachlorobenzene (Benzene, hexachloro-)
Hexachlorobutadiene (1,3-Butadiene, 1,1,2,3,4,4-hexachloro-)
Hexachlorocyclohexane (all isomers) (Lindane and isomers)
Hexachlorocyclopentadiene (1,3-Cyclopentadiene, 1,2,3,4,5,5-hexachloro-)
Hexachloroethane (Ethane, 1,1,1,2,2,2-hexachloro-)
1,2,3,4,10,10-Hexachloro-1,4,4a,5,8,8a-hexahydro-1,4:5,8-endo, endo-dimethanonaphthalene (Hexachlorohexa-hydro-endo, endo-dimetha-nonaphthalene)
Hexachlorphene (2,2'-Methylenebis(3,4,6-trichlorphenol)
Hexachloropropene (1-Propene, 1,1,2,3,3,3-hexachloro-)
Hexaethyl tetraphosphate (Tetraphosphoric acid, hexaethyl ester)
Hydrazine (Diamine)
Hydrocyanic acid (Hydrogen cyanide)
Hydrofluoric acid (Hydrogen fluoride)
Hydrogen sulfide (Sulfur hydride)
Hydroxydimethylarsine oxide (Cacodylic acid)
Indeno (1,2,3-cd)pyrene (1,10-(1,2-phenylene)pyrene)
Iodomethane (Methyl iodide)
Iron dextran (Ferric dextran)
Isocyanic acid, methyl ester (Methyl isocyanate)
Isobutyl alcohol (1-Propanol, 2-methyl-)
Isosafrole (Benzene, 1,2-methylenedioxy-4-allyl-)
Kepone (Decachlorooctahydro-1,3,4-Methano-2H-cyclobuta[cd]pentalen-2-one)
Lasiocarpine (2-Butenoic acid, 2-methyl-,7-[(2,3-dihydroxy-2-(1-methoxy-ethyl)-3-methyl-1-oxobutoxy)methyl]-2,3,5,7a-tetrahydro-1H-pyr-rolizin-1-yl ester)
Lead and compounds, N.O.S.*
Lead acetate (Acetic acid, lead salt)
Lead phosphate (Phosphoric acid, lead salt)
Lead subacetate (Lead, bis(acetato-0)tetrahydroxytri-)
Maleic anhydride (2,5-Furandione)
Maleic hydrazide (1,2-Dihydro-3,6-pyridazinedione)
Malononitrile (Propanedinitrile)
Melphalan (Alanine, 3-[p-bis(2-chloroethyl)amino]phenyl-,L-)
Mercury fulminate (Fulminic acid, mercury salt)
Mercury and compounds, N.O.S.*
Methacrylonitrile (2-Propenenitrile, 2-methyl-)
Methanethiol (Thiomethanol)
Methapyrilene (Pyridine, 2-[(2-dimethylamino)ethyl]-2-thenylamino-)
Metholmyl (Acetimidic acid, N-[(methylcarbamoyl)oxy]thio-, methyl ester)
Methoxychlor (Ethane, 1,1,1-trichloro-2,2'-bis(p-methoxyphenyl)-)
2-Methylaziridine (1,2-Propylenimine)
3-Methylcholanthrene (Benz[j]aceanthrylene, 1,2-dihydro-3-methyl-)
Methyl chlorocarbonate (Carbonochloridic acid, methyl ester)

Hazardous Constituents

4,4'-Methylenebis(2-chloroaniline) (Benzenamine, 4,4'-methylenebis-(2-chloro-)
Methyl ethyl ketone (MEK) (2-Butanone)
Methyl hydrazine (Hydrazine, methyl-)
2-Methyllactonitrile (Propanenitrile, 2-hydroxy-2-methyl-)
Methyl methacrylate (2-Propenoic acid, 2-methyl-, methyl ester)
Methyl methanesulfonate (Methanesulfonic acid, methyl ester)
2-Methyl-2-(methylthio)propionaldehyde-o-(methylcarbonyl) oxime (Pro-panal, 2-methyl-2-(methylthio)-, 0-[(methylamino)carbonyl]oxime)
N-Methyl-N'-nitro-N-nitrosoguanidine (Guanidine, N-nitroso-N-methyl-N'-nitro-)
Methyl parathion (0,0-dimethyl 0-(4-nitrophenyl) phosphorothioate)
Methylthiouracil (4-1H-Pyrimidinone, 2,3-dihydro-6-methyl-2-thioxo-)
Molybdenum and compounds, N.O.S.*
Mustard gas (Sulfide, bis(2-chloroethyl)-)
Naphthalene
1,4-Naphthoquinone (1, 4-Naphthalenedione)
1-Naphthylamine (alpha-Naphthylamine)
2-Naphthylamine (beta-Naphthylamine)
1-Naphthyl-2-thiourea (Thiourea, 1-naphthalenyl-)
Nickel and compounds, N.O.S.*
Nickel carbonyl (Nickel tetracarbonyl)
Nickel cyanide (Nickel (II) cyanide)
Nicotine and salts (Pyridine, (S)-3-(1-methyl-2-pyrrolidinyl)-, and salts)
Nitric oxide (Nitrogen (II) oxide)
p-Nitroaniline (Benzenamine, 4-nitro-)
Nitrobenzine (Benzene, nitro-)
Nitrogen dioxide (Nitrogen (IV) oxide)
Nitrogen mustard and hydrochloride salt (Ethanamine, 2-chloro-, N-(2-chlo-roethyl)-N-methyl-, and hydrochloride salt)
Nitrogen mustard N-Oxide and hydrochloride salt (Ethanamine, 2-chloro-N-(2-chloroethyl)-N-methyl-, and hydrochloride salt)
Nitroglycerine (1,2,3-Propanetriol, trinitrate)
4-Nitrophenol (Phenol, 4-nitro-)
4-Nitroquinoline-1-oxide (Quinoline, 4-nitro-1-oxide-)
Nitrosamine, N.O.S.*
N-Nitrosodi-n-butylamine (1-Butanamine, N-butyl-N-nitroso-)
N-Nitrosodiethanolamine (Ethanol, 2,2'-(nitrosoimino)bis-)
N-Nitrosodiethylamine (Ethanamine, N-ethyl-N-nitroso-)
N-Nitrosodimethylamine (Dimethylnitrosamine)
N-Nitroso-N-ethylurea (Carbamide, N-ethyl-N-nitroso-)
N-Nitrosomethylethylamine (Ethanamine, N-methyl-N-nitroso-)
N-Nitroso-N-methylurea (Carbamide, N-methyl-N-nitroso-)
N-Nitroso-N-methylurethane (Carbamic acid, methylnitroso-, ethyl ester)
N-Nitrosomethylvinylamine (Ethenamine, N-methyl-N-nitroso-)
N-Nitrosomorpholine (Morpholine, N-nitroso-)
N-Nitrosonornicotine (Nornicotine, N-nitroso-)
N-Nitrosopiperidine (Pyridine, hexahydro-, N-nitroso-)
Nitrosopyrrolidine (Pyrrole, tetrahydro-, N-nitroso-)
N-Nitrososarcosine (Sarcosine, N-nitroso-)
5-Nitro-o-toluidine (Benzenamine, 2-methyl-5-nitro-)
Octamethylpyrophosphoramide (Diphosphoramide, octamethyl-)
Osmium tetroxide (Osmium (VIII) oxide)
7-Oxabicyclo[2.2.1]heptane-2,3-dicarboxylic acid (Endothal)
Paraldehyde (1,3,5-Trioxane, 2,4,6-trimethyl-)
Parathlon (Phosphorothioic acid, 0,0-diethyl 0-(p-nitrophenyl)ester)
Pentachlorobenzene (Benzene, pentachloro-)
Pentachloroethane (Ethane, pentachloro-)
Pentachloronitrobenzene (PCNB) (Benzene, pentachloronitro-)
Pentachlorophenol (Phenol, pentachloro-)
Phenacetin (Acetamide, N-(4-ethoxyphenyl)-)
Phenol (Benzene, hydroxy-)
Phenylenediamine (Benzenediamine)
Phenylmercury acetate (Mercury, acetatophenyl-)
N-Phenylthiourea (Thiourea, phenyl-)
Phosgene (Carbonyl chloride)
Phosphine (Hydrogen phosphide)
Phosphorodithioic acid, 0,0-diethyl S-[(ethylthio)methyl] ester (Phorate)
Phosphorothioic acid, 0,0-dimethyl 0-[p-((dimethylamino)sulfonyl)phenyl] ester (Famphur)
Phthalic acid esters, N.O.S.* (Benzene, 1, 2-dicarboxylic acid, esters, N.O.S.*)
Phthalic anhydride (1,2-Benzenedicarboxylic acid anhydride)
2-Picoline (Pyridine, 2-methyl-)

Hazardous Constituents

Polychlorinated biphenyl, N.O.S.*
Potassium cyanide
Potassium silver cyanide (Argentate(1-), dicyano-, potassium)
Pronamide (3,5-Dichloro-N-(1,1-dimethyl-2-propynyl)benzamide)
1,3-Propane sultone (1,2-Oxathiolane, 2,2-dioxide)
n-Propylamine (1-Propanamine)
Propylthiouracil (Undecamethylenediamine, N,N'-bis(2-chlorobenzyl-), dihydrochloride)
2-Propyn-1-ol (Propargyl alcohol)
Pyridine
Radium -226 and -228
Reserpine (Yohimban-16-carboxylic acid, 11,17-dimethoxy-18-[3,4,5-trimethoxybenzoyl)oxy]-, methyl ester)
Resorcinol (1,3-Benzenediol)
Saccharin and salts (1,2-Benzoisothiazolin-3-one, 1,1-dioxide, and salts)
Safrole (Benzene, 1,2-methylenedioxy-4-allyl-)
Selenious acid (Selenium dioxide)
Selenium and compounds, N.O.S.*
Selenium sulfide (Sulfur selenide)
Selenourea (Carbamimidoselenoic acid)
Silver and compounds, N.O.S.*
Silver cyanide
Sodium cyanide
Streptozotocin (D-Glucopyranose, 2-deoxy-2-(3-methyl-3-nitro-soureido)-)
Strontium sulfide
Strychnine and salts (Strychnidin-10-one, and salts)
1,2,4,5-Tetrachlorobenzene (Benzene, 1,2,4,5-tetrachloro-)
2,3,7,8-Tetrachlorodibenzo-p-dioxin (TCDD) (Dibenzo-p-dioxin, 2,3,7,8-tetrachloro-)
Tetrachloroethane, N.O.S.* (Ethane, tetrachloro-, N.O.S.*)
1,1,1,2-Tetrachlorethane (Ethane, 1,1,1,2-tetrachloro-)
1,1,2,2-Tetrachlorethane (Ethane, 1,1,2,2-tetrachloro-)
Tetrachloroethane (Ethane, 1,1,2,2-tetrachloro-)
Tetrachloromethane (Carbon tetrachloride)
2,3,4,6,-Tetrachlorophenol (Phenol, 2,3,4,6-tetrachloro-)
Tetraethyldithiopyrophosphate (Dithiopyrophosphoric acid, tetraethyl-ester)
Tetraethyl lead (Plumbane, tetraethyl-)
Tetraethylpyrophosphate (Pyrophosphoric acid, tetraethyl ester)
Tetranitromethane (Methane, tetranitro-)
Thallium and compounds, N.O.S.*
Thallic oxide (Thallium (III) oxide)
Thallium (I) acetate (Acetic acid, thallium (I) salt)
Thallium (I) carbonate (Carbonic acid, dithallium (I) salt)
Thallium (I) chloride
Thallium (I) nitrate (Nitric acid, thallium (I) salt)
Thallium selenite
Thallium (I) sulfate (Sulfuric acid, thallium (I) salt)
Thioacetamide (Ethanethioamide)
Thiosemicarbazide (Hydrazinecarbothioamide)
Thiourea (Carbamide thio-)
Thiuram (Bis(dimethylthiocarbamoyl) disulfide)
Thorium and compounds, N.O.S.*, when producing thorium by-product material
Toluene (Benzene, methyl-)
Toluenediamine (Diaminotoluene)
o-Toluidine hydrochloride (Benzenamine, 2-methyl-, hydrochloride)
Tolylene diisocyanate (Benzene, 1,3-diisocyanatomethyl-)
Toxaphene (Camphene, octachloro-)
Tribromomethane (Bromoform)
1,2,4-Trichlorobenzene (Benzene, 1,2,4-trichloro-)
1,1,1-Trichloroethane (Methyl chloroform)
1,1,2-Trichloroethane (Ethane, 1,1,2-trichloro-)
Trichloroethene (Trichloroethylene)
Trichloromethanethiol (Methanethiol, trichloro-)
Trichloromonoflouromethane (Methane, trichlorofluoro-)
2,4,5-Trichlorophenol (Phenol, 2,4,5-trichloro-)
2,4,6-Trichlorophenol (Phenol, 2,4,6-trichloro-)
2,4,5-Trichlorophenoxyacetic acid (2,4,5-T) (Acetic acid, 2,4,5-trichlorophenoxy-)
2,4,5-Trichlorophenoxypropionic acid (2,4,5-TP) (Silvex) (Propionoic acid, 2-(2,4,5-trichlorophenoxy)-)
Trichloropropane, N.O.S.* (Propane, trichloro-, N.O.S.*)
1,2,3-Trichloropropane (Propane, 1,2,3-trichloro-)
0,0,0-Triethyl phosphorothioate (Phosphorothioic acid, 0,0,0-triethyl ester)

Hazardous Constituents

sym-Trinitrobenzene (Benzene, 1,3,5-trinitro-)
Tris(1-azridinyl) phosphine sulfide (Phosphine sulfide, tris(1-aziridinyl-)
Tris(2,3-dibromopropyl) phosphate (1-Propanol, 2,3-dibromo-, phosphate)
Trypan blue (2,7-Naphthalenedisulfonic acid, 3,3'-[(3,3'-dimethyl (1,1'-biphenyl)- 4,4'-diyl)bis(azo)]bis(5-amino-4-hydroxy-, tetrasodium salt)
Uracil mustard (Uracil 5-[bis(2-chloroethyl)amino]-)
Uranium and compounds, N.O.S.*
Vanadic acid, ammonium salt (ammonium vanadate)
Vanadium pentoxide (Vanadium (V) oxide)
Vinyl chloride (Ethene, chloro-)
Zinc cyanide
Zinc phosphide

* The abbreviation N.O.S. (not otherwise specified) signifies those members of the general class not specifically listed by name in this list.

[Statutory Authority: RCW 43.70.040. 91-02-049 (Order 121), recodified as § 246-252-050, filed 12/27/90, effective 1/31/91. Statutory Authority: RCW 70.98.080. 87-01-031 (Order 2450), § 402-52-300, filed 12/11/86.]

Reviser's note: The brackets and enclosed material in the text of the above section occurred in the copy filed by the agency.

Chapter 246-254 WAC
RADIATION PROTECTION—FEES

WAC

246-254-001 Purpose and scope.
246-254-010 Definitions.
246-254-020 Payment of fees.
246-254-030 Small business discount provision and optional fee payment schedule applicable to radioactive materials licensees.
246-254-040 Denial, revocation, suspension, and reinstatement.
246-254-050 Method of payment.
246-254-053 Radiation machine facility registration fees.
246-254-070 Fees for specialized radioactive material licenses.
246-254-080 Fees for medical and veterinary radioactive material use.
246-254-090 Fees for industrial radioactive material licenses.
246-254-100 Fees for laboratory radioactive material licenses.
246-254-110 Fees for reciprocity.
246-254-120 Fees for licensing and compliance actions.
246-254-130 Radioactive waste disposal site surveillance fee.
246-254-140 Fees for uranium, thorium and other mineral processors.
246-254-150 Fees for perpetual care and maintenance.
246-254-160 Fees for airborne emissions of radioactive materials.
246-254-170 Failure by applicant or licensee to pay prescribed fees.

DISPOSITION OF SECTIONS FORMERLY CODIFIED IN THIS CHAPTER

246-254-057 License fees for radioactive materials. [Statutory Authority: RCW 43.70.040. 91-02-049 (Order 121), recodified as § 246-254-057, filed 12/27/90, effective 1/31/91. Statutory Authority: RCW 43.20A.055. 87-21-016 (Order 2545), § 440-44-057, filed 10/9/87; 86-08-054 (Order 2359), § 440-44-057, filed 3/28/86; 85-13-007 (Order 2238), § 440-44-057, filed 6/7/85; 85-06-024 (Order 2209), § 440-44-057, filed 2/27/85. Statutory Authority: RCW 70.98.080. 83-24-014 (Order 2050), § 440-44-057, filed 11/30/83. Statutory Authority: RCW 43.20A.055. 83-12-058 (Order 1965), § 440-44-057, filed 6/1/83. Statutory Authority: 1982 c 201. 82-17-021 (Order 1860), § 440-44-057, filed 8/9/82.] Repealed by 91-22-027 (Order 208), filed 10/29/91, effective 11/29/91. Statutory Authority: RCW 43.70.110.

246-254-058 Fees for additional service. [Statutory Authority: RCW 43.70.040. 91-02-049 (Order 121), recodified as § 246-254-058, filed 12/27/90, effective 1/31/91. Statutory Authority: RCW 43.20A.055. 85-13-007 (Order 2238), § 440-44-058, filed 6/7/85.] Repealed by 91-22-027 (Order 208), filed 10/29/91, effective 11/29/91. Statutory Authority: RCW 43.70.110.

246-254-999 Site use permit fee. [Statutory Authority: RCW 43.70.-040. 91-02-049 (Order 121), recodified as § 246-254-

999, filed 12/27/90, effective 1/31/91. Statutory Authority: Chapter 70.98 RCW and 1985 c 383. 85-20-021 (Order 2283), § 440-44-060, filed 9/23/85. Statutory Authority: RCW 43.20A.055. 83-12-058 (Order 1965), § 440-44-060, filed 6/1/83.] Repealed by 91-22-027 (Order 208), filed 10/29/91, effective 11/29/91. Statutory Authority: RCW 43.70.110.

WAC 246-254-001 Purpose and scope. This chapter establishes fees charged for licensing, permitting, registration, and inspection services rendered by the office of radiation protection as authorized under chapters 43.70, 70.98, and 70.121 RCW. These fees apply to owners and operators of radiation generating machines, users of radioactive material, operators of low-level radioactive waste disposal facilities, owners and operators of facilities emitting airborne radioactivity, and owners and operators of certain mineral processing and uranium or thorium milling operations and their associated tailings or waste.

[Statutory Authority: RCW 19.02.050, 43.20B.020, 43.70.110, 43.70.250, 70.98.080. 07-14-130, § 246-254-001, filed 7/3/07, effective 8/3/07. Statutory Authority: RCW 43.70.110. 91-22-027 (Order 208), § 246-254-001, filed 10/29/91, effective 11/29/91. Statutory Authority: RCW 43.70.040. 91-02-049 (Order 121), recodified as § 246-254-001, filed 12/27/90, effective 1/31/91. Statutory Authority: RCW 70.98.080. 87-01-031 (Order 2450), § 402-70-010, filed 12/11/86; 79-12-073 (Order 1459), § 402-70-010, filed 11/30/79, effective 1/1/80.]

WAC 246-254-010 Definitions. As used in this chapter, the following definitions apply:

(1) "Application" means a completed RHF-1 or equivalent with supporting documentation requesting the department to grant authority to receive, possess, use, transfer, own or acquire radioactive material. For radiation machine facility registrations, "application" means the master business application and appropriate addenda used by the master license service of the department of licensing.

(2) "Compliance inspection" means a routinely scheduled visit to the licensee's facility and/or temporary job site(s) for the purpose of determining compliance with the radioactive material license and applicable regulations. This service is covered by the annual fee for the radioactive material license.

(3) "Department" means the department of health which has been designated as the state radiation control agency.

(4) "Direct staff time" means all work time directly applicable to or associated with a specific radioactive material licensee and includes license file review, inspection preparation, on-site visits, report writing, review and acknowledgement of correspondence, review of license applications, renewals and amendment requests, telephone contacts, and staff or management conferences specifically related to the license. Travel time is not considered direct staff time.

(5) "Emission unit" means the point of release of airborne emissions of radioactive material.

(6) "Environmental cleanup monitoring" means an on-site visit by the department to a licensee's facility or site of operation to determine the status of corrective actions to remove environmental radiation contamination resulting from the licensee's operation. Such a monitoring visit may include, but is not limited to, the review of the licensee's records pertaining to the environmental cleanup, observation of the licensee's cleanup work, sampling by the department for analysis, associated laboratory work, and the analysis of the information collected by the department.

(7) "Facility" means all buildings, structures and operations on one contiguous site using or identified by one physical location address designation.

(8) "Follow-up inspection" means an on-site visit to a licensee's facility to verify that prompt action was taken to correct significant items of noncompliance found by the department in a previous inspection. The first follow-up inspection is covered by the annual fee for the radioactive material license.

(9) "Inspection" means an official examination or observation by the department including but not limited to tests, surveys and monitoring to determine compliance with rules, regulations, orders, requirements and conditions of the department.

(10) "Investigation" means an on-site visit to a licensee's facility or site of operation when, in the department's judgment, it is required for the purpose of reviewing specific conditions, allegations, or other information regarding unusual conditions, operations, or practices. This service is covered by the annual fee for the radioactive material license.

(11) "License" means a license issued by the department in accordance with the regulations adopted by the department.

(12) "New license application" means a request to use radioactive material from a person not currently a licensee or from a current licensee requesting authorization to use radioactive material in a new way such that a change of fee category is required.

(13) "Perpetual care and maintenance" means further maintenance, surveillance or other care of milling or tailings impoundment sites after termination of the site operator's decommissioning responsibilities and license.

(14) "Registration" means registration with the department by any person possessing a source of ionizing radiation in accordance with regulations adopted by the department.

(15) "Sealed source and device evaluation" means a radiological safety evaluation performed by the department on the design, manufacture, and test data of any single sealed source and/or device model for the purpose of registering the sealed source or device with the United States Nuclear Regulatory Commission.

[Statutory Authority: RCW 19.02.050, 43.20B.020, 43.70.110, 43.70.250, 70.98.080. 07-14-130, § 246-254-010, filed 7/3/07, effective 8/3/07. Statutory Authority: RCW 43.70.110. 91-22-027 (Order 208), § 246-254-010, filed 10/29/91, effective 11/29/91. Statutory Authority: RCW 43.70.040. 91-02-049 (Order 121), recodified as § 246-254-010, filed 12/27/90, effective 1/31/91. Statutory Authority: RCW 70.98.080. 87-01-031 (Order 2450), § 402-70-020, filed 12/11/86; 79-12-073 (Order 1459), § 402-70-020, filed 11/30/79, effective 1/1/80.]

WAC 246-254-020 Payment of fees. (1) Applicants, licensees, permittees, and registrants requesting or receiving licenses, permits, registrations, and actions or services by the department shall pay the applicable fee or fees for the license, permit, registration, and action or service provided by the department.

(2) The department shall charge a fee for each:

(a) Radiation machine facility registration, and radiation machine at the facility, if applicable;

(b) Radioactive material license;

(c) Service or action with respect to a radioactive material licensee not otherwise covered by fees;

(d) Cubic foot of low-level radioactive waste volume received at a commercial disposal site;

(e) Kilogram of uranium or thorium milled from ore; and

(f) Air emission permit.

(3) The department shall charge a fee for each radioactive material license based on the single highest fee category describing activities subject to the conditions of the license.

(4) The department shall charge the applicable license fee for each category when multiple licenses are required.

(5) The department may require multiple radioactive material licenses based upon:

(a) Physical separation of operations;

(b) Organizational separations within a licensee's operation;

(c) Complexity of uses of radioactive material such that two or more fee categories would apply to the operation.

(6) Each licensee, permittee, or registrant shall:

(a) Remit the full fee (i) at the fee rate established by rule at the time such fee is paid, and (ii) at least thirty days prior to the annual anniversary date for licensees or (iii) on a payment schedule as provided in WAC 246-254-030 or other schedule as may be determined through partnership with the master license service of the department of licensing.

(b) Consider the annual anniversary to be the month and day of the expiration date of the existing radioactive material license, or other date as may be determined through partnership with the master license service of the department of licensing.

(7) The department shall refund one-half of the fee if an application is withdrawn prior to issuance of a radioactive material license.

(8) If there is a change by the applicant, licensee, permittee or registrant resulting in a higher fee category, the applicant, licensee, permittee, or registrant shall pay a prorated fee for the remainder of the fee interval.

(9) Each licensee, permittee, or registrant shall remit the full amount of any quarterly billing or individual billing for licensing or compliance actions within thirty days of receipt of the bill.

(10) Fees due on or after the effective date of these regulations shall be at the rate prescribed in this chapter.

[Statutory Authority: RCW 19.02.050, 43.20B.020, 43.70.110, 43.70.250, 70.98.080. 07-14-130, § 246-254-020, filed 7/3/07, effective 8/3/07. Statutory Authority: RCW 43.70.110. 91-22-027 (Order 208), § 246-254-020, filed 10/29/91, effective 11/29/91. Statutory Authority: RCW 43.70.040. 91-02-049 (Order 121), recodified as § 246-254-020, filed 12/27/90, effective 1/31/91. Statutory Authority: RCW 70.98.080. 87-01-031 (Order 2450), § 402-70-030, filed 12/11/86; 79-12-073 (Order 1459), § 402-70-030, filed 11/30/79, effective 1/1/80.]

WAC 246-254-030 Small business discount provision and optional fee payment schedule applicable to radioactive materials licensees. (1) Small business may receive a twenty-five percent discount on radioactive materials license fees specified in WAC 246-254-070, 246-254-080, 246-254-090, and 246-254-100.

(2) To qualify for the discount, the business shall:

(a) Be a corporation, partnership, sole proprietorship, or other legal entity formed for the purpose of making a profit;

(b) Be independently owned and operated from all other businesses (i.e., not a subsidiary of a parent company); and

(c) Have fifty or fewer employees.

(3) To receive the discount, the license applicant at the time of initial license request, or the licensee at the time of annual billing shall:

(a) Certify, on the business' letterhead or appropriate departmental form, the business meets the conditions in subsection (2) of this section;

(b) Sign the certification as the chief executive officer of the business or as an official designee;

(c) Have the certification notarized;

(d) Enclose the payment with the certification; and

(e) Submit the certification and payment in accordance with instructions provided by the department.

(4) The department may verify certifications and will suspend any radioactive materials license if the applicant/licensee:

(a) Failed to pay the required fee; or

(b) Made an invalid or false certification.

(5) Upon request of any radioactive materials licensee or license applicant, the department may accept semiannual or quarterly payments in lieu of the required annual license fee, provided:

(a) A written payment schedule setting specific due dates and payment amounts is submitted; and

(b) The total payments per the schedule equal the fee in effect at the time such fee payment schedule is accepted by the department.

[Statutory Authority: RCW 43.70.110. 91-22-027 (Order 208), § 246-254-030, filed 10/29/91, effective 11/29/91. Statutory Authority: RCW 43.70.-040. 91-02-049 (Order 121), recodified as § 246-254-030, filed 12/27/90, effective 1/31/91. Statutory Authority: RCW 43.20A.055. 86-12-039 (Order 2382), § 440-44-059, filed 5/30/86.]

WAC 246-254-040 Denial, revocation, suspension, and reinstatement. The department shall:

(1) Deny an application if the appropriate fee is not received;

(2) Suspend or revoke a license, permit, or registration if a required fee is not received;

(3) Refund no fees if a license, permit or registration is denied, revoked, or suspended;

(4) Require reapplication for a license, permit, or registration after denial or revocation including fees as required under this chapter.

[Statutory Authority: RCW 43.70.110. 91-22-027 (Order 208), § 246-254-040, filed 10/29/91, effective 11/29/91.]

WAC 246-254-050 Method of payment. (1) For radiation machine facility registration application and renewal fees, applicants and registrants shall submit payment to the master license service of the department of licensing.

(2) For all other fees and charges including shielding plan review and follow-up inspection fees, licensees, permittees and registrants shall:

(a) Submit fee payments by check, draft or money order made payable to the department of health; and

(b) Include fee payment with the application for license or submit the fee by mail, in person, or by courier to the address provided in the bill or bill correspondence.

[Statutory Authority: RCW 19.02.050, 43.20B.020, 43.70.110, 43.70.250, 70.98.080. 07-14-130, § 246-254-050, filed 7/3/07, effective 8/3/07. Statutory Authority: RCW 43.70.110. 91-22-027 (Order 208), § 246-254-050, filed 10/29/91, effective 11/29/91. Statutory Authority: RCW 43.70.040. 91-02-049 (Order 121), recodified as § 246-254-050, filed 12/27/90, effective 1/31/91. Statutory Authority: RCW 70.98.080. 87-01-031 (Order 2450), § 402-70-050, filed 12/11/86; 79-12-073 (Order 1459), § 402-70-050, filed 11/30/79, effective 1/1/80.]

WAC 246-254-053 Radiation machine facility registration fees. (1) Radiation machine facility fees apply to each person or facility owning, leasing or using radiation-producing machines. The annual facility fee consists of the base registration fee and a per tube charge, where applicable.

(a) **Radiation Machine Facility Fees**

Type of Facility		Facility Base Fee	Added Fee per Tube
(i)	Dental, podiatric, veterinary uses	$134	See following table
(ii)	Hospital, medical, chiropractic uses	$207	See following table
(iii)	Industrial, research, educational, security, or other facilities	$184	See following table
(iv)	Mammography only	$89	N/A
(v)	Bone densitometry only	$89	N/A
(vi)	Electron microscopes only	$89	N/A
(vii)	Bomb squad only	$89	N/A
(viii)	Radiation safety program as specified in subsection (3) of this section	$5,827	N/A

(b) **Radiation Machine Tube Fees**

Type of Tube		Added Fee per Tube
(i)	Dental (intraoral, panoramic, cephalometric, dental radiographic, and dental CT)	$46
(ii)	Veterinary (radiographic, fluoroscopic, portable, mobile)	$46
(iii)	Podiatric uses (radiographic, fluoroscopic)	$46
(iv)	Mammography	N/A
(v)	Bone densitometry	N/A
(vi)	Electron microscope	N/A
(vii)	Bomb squad	N/A
(viii)	Medical radiographic (includes R/F combinations, fixed, portable, mobile)	$131
(ix)	Medical fluoroscopic (includes R/F combinations, C-arm, Simulator, fixed, portable, mobile)	$131
(x)	Therapy (Grenz Ray, Orthovoltage, nonaccelerator)	$131
(xi)	Accelerators (therapy, other medical uses)	$131

(b) **Radiation Machine Tube Fees**

Type of Tube		Added Fee per Tube
(xii)	Computer tomography (CT, CAT scanner)	$131
(xiii)	Stereotactic (mammography)	$131
(xiv)	Industrial radiographic	$46
(xv)	Analytical, X-ray fluorescence	$46
(xvi)	Industrial accelerators	$46
(xvii)	Airport baggage	$46
(xviii)	Cabinet (industrial, security, mail, other)	$46
(xiv)	Other industrial uses (includes industrial fluoroscopic uses)	$46

(2) **X-ray shielding fees.**

(a) Facilities regulated under the shielding plan requirements of WAC 246-225-030 or 246-227-150 are subject to a $344 X-ray shielding review fee for each X-ray room plan submitted; or

(b) A registrant may request an expedited plan review for $1000 for each X-ray room plan. Expedited plan means the department will complete the plan review within two business days of receiving all required information from the registrant.

(c) If a facility regulated under WAC 246-225-030 or 246-227-150 operates without submittal and departmental review of X-ray shielding calculations and a floor plan it will be subject to a shielding design follow-up fee of $656.

(3) **Radiation safety fee.** If a facility or group of facilities under one administrative control employs two or more full-time individuals whose positions are entirely devoted to in-house radiation safety, the facility shall pay a flat, annual fee as specified in subsection (1)(a)(viii) of this section.

(4) **Consolidation of registration.** Facilities may consolidate X-ray machine registrations into a single registration after notifying the department in writing and documenting that a single business license applies to all buildings, structures and operations on one contiguous site using or identified by one physical address location designation.

(5) **Inspection fees.**

(a) The cost of routine, periodic inspections, including the initial inspection, are covered under the base fee and tube registration fees as described in subsection (1) of this section.

(b) Facilities requiring follow-up inspections due to uncorrected noncompliances must pay an inspection follow-up fee of $118 for each reinspection required.

(6) A facility's annual registration fee is valid for a specific geographical location and person only. It is not transferable to another geographical location or owner or user.

[Statutory Authority: RCW 70.98.080, 43.20B.020, 43.70.250, and 43.70.110. 08-14-118, § 246-254-053, filed 6/30/08, effective 7/31/08. Statutory Authority: RCW 19.02.050, 43.20B.020, 43.70.110, 43.70.250, 70.98.080. 07-14-130, § 246-254-053, filed 7/3/07, effective 8/3/07. Statutory Authority: RCW 70.98.080, 43.20B.020, 43.70.110, and 43.70.250. 05-24-108, § 246-254-053, filed 12/7/05, effective 1/7/06. Statutory Authority: RCW 43.70.250. 04-12-125, § 246-254-053, filed 6/2/04, effective 7/3/04. Statutory Authority: RCW 43.70.250 and 43.70.110. 03-13-122, § 246-254-053, filed 6/18/03, effective 7/19/03. Statutory Authority: RCW 43.70.250 and 2001 2nd sp.s. c 7 § 220. 02-07-085, § 246-254-053, filed 3/19/02, effective 4/19/02. Statutory Authority: RCW 43.70.110. 01-14-048, § 246-254-053, filed 6/29/01, effective 7/30/01; 99-13-085, § 246-254-053, filed 6/14/99, effective 7/15/99; 98-11-066, § 246-254-053, filed 5/19/98, effective 7/1/98. Statutory Authority: RCW 43.70.110, 43.70.250 and chapter

70.98 RCW. 98-01-047, § 246-254-053, filed 12/8/97, effective 1/8/98; 96-11-043, § 246-254-053, filed 5/8/96, effective 6/28/96; 95-12-004, § 246-254-053, filed 5/25/95, effective 6/25/95; 94-11-010, § 246-254-053, filed 5/5/94, effective 6/5/94; 93-13-019 (Order 372), § 246-254-053, filed 6/8/93, effective 7/9/93. Statutory Authority: RCW 43.70.110. 91-22-027 (Order 208), § 246-254-053, filed 10/29/91, effective 11/29/91. Statutory Authority: RCW 43.70.040. 91-02-049 (Order 121), recodified as § 246-254-053, filed 12/27/90, effective 1/31/91. Statutory Authority: RCW 43.20B.110. 89-16-064 (Order 2839), § 440-44-050, filed 7/31/89, effective 8/31/89. Statutory Authority: RCW 43.20A.055. 86-08-054 (Order 2359), § 440-44-050, filed 3/28/86. Statutory Authority: Chapter 70.98 RCW and 1985 c 383. 85-20-021 (Order 2283), § 440-44-050, filed 9/23/85. Statutory Authority: RCW 43.20A.055. 85-13-007 (Order 2238), § 440-44-050, filed 6/7/85; 83-12-058 (Order 1965), § 440-44-050, filed 6/1/83. Statutory Authority: 1982 c 201. 82-13-011 (Order 1825), § 440-44-050, filed 6/4/82.]

WAC 246-254-070 Fees for specialized radioactive material licenses. (1) Persons licensed or authorized to possess or use radioactive material in the following special categories shall forward annual fees to the department as follows:

(a) $9,164 for operation of a single nuclear pharmacy.

(b) $15,628 for operation of a single nuclear laundry.

(c) $15,628 for a license authorizing a single facility to use more than one curie of unsealed radioactive material in the manufacture and distribution of radioactive products or devices containing radioactive material.

(d) $5,476 for a license authorizing a single facility to use less than or equal to one curie of unsealed radioactive material or any quantity of previously sealed sources in the manufacture and distribution of products or devices containing radioactive material.

(e) $1,408 for a license authorizing the receipt and redistribution from a single facility of manufactured products or devices containing radioactive material.

(f) $10,484 for a license authorizing decontamination services operating from a single facility.

(g) $4,956 for a license authorizing waste brokerage including the possession, temporary storage at a single facility, and over-packing only of radioactive waste.

(h) $2,208 for a license authorizing health physics services, leak testing, calibration services, equipment servicing, or possession of sealed sources for purpose of sales demonstration only.

(i) $2,592 for a civil defense license.

(j) $780 for a license authorizing possession of special nuclear material as pacemakers or depleted uranium as shielding.

(2) Persons licensed or authorized to possess and use radioactive material in the following broad scope categories shall forward annual fees to the department as follows:

(a) $31,016 for a license authorizing possession of atomic numbers three through eighty-three with maximum authorized possession of any single isotope greater than one curie.

(b) $14,336 for a license authorizing possession of atomic numbers three through eighty-three with maximum authorized possession of any single isotope greater than 0.1 curie but less than or equal to one curie.

(c) $11,520 for a license authorizing possession of atomic numbers three through eighty-three with maximum authorized possession less than or equal to 0.1 curie.

(3) Persons licensed or authorized to possess or use radioactive material which are not covered by any of the annual license fees described in WAC 246-254-070 through 246-254-100, shall pay fees as follows:

(a) An initial application fee of one thousand dollars;

(b) Billing at the rate of $162 for each hour of direct staff time associated with issuing and maintaining the license and for the inspection of the license; and

(c) Any fees for additional services as described in WAC 246-254-120.

(d) The initial application fee will be considered a credit against billings for direct staff charges but is otherwise nonrefundable.

(4) Persons licensed or authorized to possess or use radioactive material in a facility for radioactive waste processing, including resource recovery, volume reduction, decontamination activities, or other waste treatment, but not permitting commercial on-site disposal, shall pay fees as follows:

(a) A nonrefundable initial application fee for a new license of sixteen thousand dollars which shall be credited to the applicant's quarterly billing described in (b) of this subsection; and

(b) Quarterly billings for actual direct and indirect costs incurred by the department including, but not limited to, license renewal, license amendments, compliance inspections, a resident inspector for time spent on the licensee's premises as deemed necessary by the department, laboratory and other support services, and travel costs associated with staff involved in the foregoing.

[Statutory Authority: RCW 70.98.080, 43.20B.020, 43.70.110, 43.70.250. 08-14-075, § 246-254-070, filed 6/26/08, effective 7/27/08; 05-24-109, § 246-254-070, filed 12/7/05, effective 1/7/06. Statutory Authority: RCW 43.70.250. 04-12-124, § 246-254-070, filed 6/2/04, effective 7/3/04. Statutory Authority: RCW 70.98.080, 43.70.250 and [43.70.]110. 03-14-034, § 246-254-070, filed 6/23/03, effective 7/24/03. Statutory Authority: RCW 43.70.250, 43.270.040, and 2001 2nd sp.s. c 7 § 220. 02-04-025, § 246-254-070, filed 1/24/02, effective 2/24/02. Statutory Authority: RCW 70.98.080. 01-14-046, § 246-254-070, filed 6/29/01, effective 7/30/01. Statutory Authority: RCW 43.70.250. 00-02-016, § 246-254-070, filed 12/27/99, effective 1/27/00; 99-12-022, § 246-254-070, filed 5/24/99, effective 6/24/99. Statutory Authority: RCW 43.70.110. 98-11-067, § 246-254-070, filed 5/19/98, effective 6/19/98. Statutory Authority: RCW 43.70.110, [43.70.]250 and chapter 70.98 RCW. 96-11-043, § 246-254-070, filed 5/8/96, effective 6/28/96; 95-12-004, § 246-254-070, filed 5/25/95, effective 6/25/95; 94-11-011 § 246-254-070, filed 5/5/94, effective 6/5/94; 93-13-019 (Order 372), § 246-254-070, filed 6/8/93, effective 7/9/93. Statutory Authority: RCW 43.70.110. 91-22-027 (Order 208), § 246-254-070, filed 10/29/91, effective 11/29/91.]

WAC 246-254-080 Fees for medical and veterinary radioactive material use. (1) Licensees authorized possession or use of radioactive material in the following medical or veterinary categories shall forward annual fees to the department as follows:

(a) $7,748 for operation of a mobile nuclear medicine program from a single base of operation;

(b) $5,648 for the use of unsealed radioactive material for imaging and localization studies for which a written directive is not required as defined in WAC 246-240-157, at a single facility (diagnostic imaging and localization nuclear medicine);

(c) $4,892 for the use of unsealed radioactive material for which a written directive is required as defined in WAC 246-240-201 at a single facility (radiopharmaceutical therapy);

(d) $7,800 for the use of unsealed radioactive material for imaging and localization studies for which a written directive is not required as defined in WAC 246-240-157, the use of unsealed radioactive material for which a written directive is required as defined in WAC 246-240-201, and/or the use of sealed sources for manual brachytherapy as defined in WAC 246-240-251 at a single facility (combination diagnostic nuclear medicine and/or radiopharmaceutical therapy), and/or sealed source (manual or machine) therapy;

(e) $4,192 for the use of sealed sources for manual brachytherapy as defined in WAC 246-240-251 at a single facility (manual brachytherapy);

(f) $2,592 for the use of sealed sources in a remote afterloader unit, teletherapy unit, or gamma stereotactic radiosurgery unit, as defined in WAC 246-240-351, at a single facility (machine brachytherapy);

(g) $3,936 for a license authorizing medical or veterinary possession of greater than two hundred millicuries total possession of radioactive material at a single facility;

(h) $3,132 for a license authorizing medical or veterinary possession of greater than thirty millicuries but less than or equal to two hundred millicuries total possession of radioactive material at a single facility;

(i) $2,292 for a license authorizing medical or veterinary possession of less than or equal to thirty millicuries total possession of radioactive material at a single facility;

(j) $2,020 for the use of unsealed radioactive material for uptake, dilution and/or excretion studies for which a written directive is not required, as defined in WAC 246-240-151, at a single facility (diagnostic uptake, dilution, and excretion nuclear medicine);

(k) $1,260 for a license authorizing medical or veterinary possession of a sealed source for diagnostic use at a single facility.

(2) The fee for a license authorizing multiple locations shall be increased by fifty percent of the annual fee for each additional location.

[Statutory Authority: RCW 70.98.080, 43.20B.020, 43.70.110, 43.70.250. 08-14-075, § 246-254-080, filed 6/26/08, effective 7/27/08; 05-24-109, § 246-254-080, filed 12/7/05, effective 1/7/06. Statutory Authority: RCW 43.70.250. 04-12-124, § 246-254-080, filed 6/2/04, effective 7/3/04. Statutory Authority: RCW 70.98.080, 43.70.250 and [43.70.]110. 03-14-034, § 246-254-080, filed 6/23/03, effective 7/24/03. Statutory Authority: RCW 43.70.250, 43.270.040, and 2001 2nd sp.s. c 7 § 220. 02-04-025, § 246-254-080, filed 1/24/02, effective 2/24/02. Statutory Authority: RCW 70.98.080. 01-14-046, § 246-254-080, filed 6/29/01, effective 7/30/01. Statutory Authority: RCW 43.70.250. 00-02-016, § 246-254-080, filed 12/27/99, effective 1/27/00; 99-12-022, § 246-254-080, filed 5/24/99, effective 6/24/99. Statutory Authority: RCW 43.70.110. 98-11-067, § 246-254-080, filed 5/19/98, effective 6/19/98. Statutory Authority: RCW 43.70.110, [43.70.]250 and chapter 70.98 RCW. 96-11-043, § 246-254-080, filed 5/8/96, effective 6/28/96; 95-12-004, § 246-254-080, filed 5/25/95, effective 6/25/95; 94-11-011 § 246-254-080, filed 5/5/94, effective 6/5/94; 93-13-019 (Order 372), § 246-254-080, filed 6/8/93, effective 7/9/93. Statutory Authority: RCW 43.70.110. 91-22-027 (Order 208), § 246-254-080, filed 10/29/91, effective 11/29/91.]

WAC 246-254-090 Fees for industrial radioactive material licenses. (1) Persons licensed or authorized to possess or use radioactive material in the following industrial categories shall forward annual fees to the department as follows:

(a) $9,124 for a license authorizing the use of radiographic exposure devices in one or more permanent radiographic vaults in a single facility.

(b) $12,232 for a license authorizing the use of radiographic exposure devices at temporary job sites but operating from a single storage facility.

(c) $5,992 for a license authorizing well-logging activities including the use of radioactive tracers operating from a single storage facility.

(d) $1,292 for a license authorizing possession of portable sealed sources including moisture/density gauges and excluding radiographic exposure devices operating from a single storage facility.

(e) $1,408 for a license authorizing possession of any nonportable sealed source, including special nuclear material and excluding radioactive material used in a gas chromatograph at a single facility.

(f) $888 for a license authorizing possession of gas chromatograph units containing radioactive material at a single facility.

(g) $2,460 for a license authorizing possession of any self-shielded or pool type irradiator with sealed source total quantity greater than one hundred curies at a single facility.

(h) $13,076 for a license authorizing possession of sealed sources for a walk-in type irradiator at a single facility.

(i) $11,388 for a license authorizing possession of greater than one gram of unsealed special nuclear material or greater than five hundred kilograms of source material at a single facility.

(j) $3,644 for a license authorizing possession of less than or equal to one gram of unsealed special nuclear material or five hundred kilograms of source material at a single facility.

(k) $576 for a license authorizing possession of static elimination devices not covered by a general license.

(2) Persons with licenses authorizing multiple locations of permanent storage shall increase the annual fee by fifty percent for each additional location.

(3) Depleted uranium registrants required to file Form RHF-20 shall forward an annual fee of $116 to the department.

(4) General licensees required to register in accordance with WAC 246-233-020 (3)(k) shall forward an annual fee of $344 to the department.

[Statutory Authority: RCW 70.98.080, 43.20B.020, 43.70.110, 43.70.250. 08-14-075, § 246-254-090, filed 6/26/08, effective 7/27/08; 05-24-109, § 246-254-090, filed 12/7/05, effective 1/7/06. Statutory Authority: RCW 43.70.250. 04-12-124, § 246-254-090, filed 6/2/04, effective 7/3/04. Statutory Authority: RCW 70.98.050. 04-04-055, § 246-254-090, filed 1/30/04, effective 3/1/04. Statutory Authority: RCW 70.98.080, 43.70.250 and [43.70.]110. 03-14-034, § 246-254-090, filed 6/23/03, effective 7/24/03. Statutory Authority: RCW 43.70.250, 43.270.040, and 2001 2nd sp.s. c 7 § 220. 02-04-025, § 246-254-090, filed 1/24/02, effective 2/24/02. Statutory Authority: RCW 70.98.080. 01-14-046, § 246-254-090, filed 6/29/01, effective 7/30/01. Statutory Authority: RCW 43.70.250. 00-02-016, § 246-254-090, filed 12/27/99, effective 1/27/00; 99-12-022, § 246-254-090, filed 5/24/99, effective 6/24/99. Statutory Authority: RCW 43.70.110. 98-11-067, § 246-254-090, filed 5/19/98, effective 6/19/98. Statutory Authority: RCW 43.70.110, [43.70.]250 and chapter 70.98 RCW. 96-11-043, § 246-254-090, filed 5/8/96, effective 6/28/96; 95-12-004, § 246-254-090, filed 5/25/95, effective 6/25/95; 94-11-011 § 246-254-090, filed 5/5/94, effective 6/5/94; 93-13-019 (Order 372), § 246-254-090, filed 6/8/93, effective 7/9/93. Statutory Authority: RCW 43.70.110. 91-22-027 (Order 208), § 246-254-090, filed 10/29/91, effective 11/29/91.]

WAC 246-254-100 Fees for laboratory radioactive material licenses. (1) Persons licensed or authorized to possess or use unsealed radioactive material in the following laboratory categories shall forward annual fees to the department as follows:

(a) $6,240 for a license authorizing possession at a single facility of unsealed sources in amounts greater than:

(i) One millicurie of I-125 or I-131; or

(ii) One hundred millicuries of H-3 or C-14; or

(iii) Ten millicuries of any single isotope.

(b) $3,080 for a license authorizing possession at a single facility of unsealed sources in amounts:

(i) Greater than 0.1 millicurie and less than or equal to one millicurie of I-125 or I-131; or

(ii) Greater than ten millicuries and less than or equal to one hundred millicuries of H-3 or C-14; or

(iii) Greater than one millicurie and less than or equal to ten millicuries of any single isotope.

(c) $2,592 for a license authorizing possession at a single facility of unsealed sources in amounts:

(i) Greater than 0.01 millicurie and less than or equal to 0.1 millicurie of I-125 or I-131; or

(ii) Greater than one millicurie and less than or equal to ten millicuries of H-3 or C-14; or

(iii) Greater than 0.1 millicurie and less than or equal to one millicurie of any other single isotope.

(d) $888 for a license authorizing possession at a single facility of unsealed or sealed sources in amounts:

(i) Less than or equal to 0.01 millicurie of I-125 or I-131; or

(ii) Less than or equal to one millicurie of H-3 or C-14; or

(iii) Less than or equal to 0.1 millicurie of any other single isotope.

(e) $1,196 for a license authorizing possession at a single facility of large quantities of naturally occurring radioactive material in total concentration not exceeding 0.002 microcurie per gram.

(2) Persons with licenses authorizing multiple locations of use shall increase the annual fee by fifty percent for each additional location.

(3) Persons registered to perform in vitro testing pursuant to Form RHF-15 shall forward an annual fee of $116 to the department.

[Statutory Authority: RCW 70.98.080, 43.20B.020, 43.70.110, 43.70.250. 08-14-075, § 246-254-100, filed 6/26/08, effective 7/27/08; 05-24-109, § 246-254-100, filed 12/7/05, effective 1/7/06. Statutory Authority: RCW 43.70.250. 04-12-124, § 246-254-100, filed 6/2/04, effective 7/3/04. Statutory Authority: RCW 70.98.080, 43.70.250 and [43.70.]110. 03-14-034, § 246-254-100, filed 6/23/03, effective 7/24/03. Statutory Authority: RCW 43.70.250, 43.270.040, and 2001 2nd sp.s. c 7 § 220. 02-04-025, § 246-254-100, filed 1/24/02, effective 2/24/02. Statutory Authority: RCW 70.98.080. 01-14-046, § 246-254-100, filed 6/29/01, effective 7/30/01. Statutory Authority: RCW 43.70.250. 00-02-016, § 246-254-100, filed 12/27/99, effective 1/27/00; 99-12-022, § 246-254-100, filed 5/24/99, effective 6/24/99. Statutory Authority: RCW 43.70.110. 98-11-067, § 246-254-100, filed 5/19/98, effective 6/19/98. Statutory Authority: RCW 43.70.110, [43.70.]250 and chapter 70.98 RCW. 96-11-043, § 246-254-100, filed 5/8/96, effective 6/28/96; 95-12-004, § 246-254-100, filed 5/25/95, effective 6/25/95; 94-11-011 § 246-254-100, filed 5/5/94, effective 6/5/94; 93-13-019 (Order 372), § 246-254-100, filed 6/8/93, effective 7/9/93. Statutory Authority: RCW 43.70.110. 91-22-027 (Order 208), § 246-254-100, filed 10/29/91, effective 11/29/91.]

WAC 246-254-110 Fees for reciprocity. (1) The department shall charge fees for reciprocal recognition of other agreement state, licensing state or United States Nuclear Regulatory Commission licenses based upon the actual amount of radioactive material or type of devices being transported into Washington state or the type of service to be performed involving radioactive material.

(2) The department shall charge a fee equal to one hundred percent of the fee specified under WAC 246-254-070, 246-254-080, 246-254-090, and 246-254-100.

(3) The department shall permit the reciprocally recognized licensee to possess and use radioactive material in the state of Washington up to one hundred eighty days during the twelve-month period following payment of each fee.

[Statutory Authority: RCW 43.70.110. 91-22-027 (Order 208), § 246-254-110, filed 10/29/91, effective 11/29/91.]

WAC 246-254-120 Fees for licensing and compliance actions. (1) In addition to the fee for each radioactive material license as described under WAC 246-254-070, 246-254-080, 246-254-090, and 246-254-100, a licensee shall pay a service fee for each additional licensing and compliance action as follows:

(a) For a second follow-up inspection, and each follow-up inspection thereafter, a fee of $162 per hour of direct staff time associated with the follow-up inspection, not to exceed $1,625 per follow-up inspection. Hours are calculated in half-hour increments.

(b) For each environmental cleanup monitoring visit, a fee of $162 per hour of direct staff time associated with the environmental cleanup monitoring visit, not to exceed $4,063 per visit. Hours are calculated in half-hour increments.

(c) For each new license application, the fee of $260 in addition to the required annual fee.

(d) For each sealed source and device evaluation, a fee of $162 per hour of direct staff time associated with each sealed source and device evaluation, not to exceed $4,875 per evaluation.

(e) For review of air emission and environmental programs and data collection and analysis of samples, and review of decommissioning activities by qualified staff in those work units, a fee of $162 per hour of direct staff time associated with the review. The fee does not apply to reviews conducted by the radioactive materials section staff and does not apply unless the review time would result in a special service charge exceeding ten percent of the licensee's annual fee.

(f) For expedited licensing review, a fee of $162 per hour of direct staff time associated with the review. This fee only applies when, by the mutual consent of licensee and affected staff, a licensing request is taken out of date order and processed by staff during nonwork hours and for which staff is paid overtime.

(2) The licensee or applicant shall pay any additional service fees at the time of application for a new license or within thirty days of the date of the billing for all other licensing and compliance actions.

(3) The department shall process an application only upon receipt of the new application fee and the annual fee.

(4) The department may take action to modify, suspend, or terminate the license or sealed source and device registra-

tion if the licensee fails to pay the fee for additional licensing and compliance actions billed by the department.

[Statutory Authority: RCW 70.98.080, 43.20B.020, 43.70.110, 43.70.250. 08-14-075, § 246-254-120, filed 6/26/08, effective 7/27/08; 05-24-109, § 246-254-120, filed 12/7/05, effective 1/7/06. Statutory Authority: RCW 43.70.250. 04-12-124, § 246-254-120, filed 6/2/04, effective 7/3/04. Statutory Authority: RCW 43.70.250, 43.270.040, and 2001 2nd sp.s. c 7 § 220. 02-04-025, § 246-254-120, filed 1/24/02, effective 2/24/02. Statutory Authority: RCW 70.98.080. 01-14-046, § 246-254-120, filed 6/29/01, effective 7/30/01. Statutory Authority: RCW 43.70.110, 43.70.250 and chapter 70.98 RCW. 95-12-004, § 246-254-120, filed 5/25/95, effective 6/25/95; 94-11-011, § 246-254-120, filed 5/5/94, effective 6/5/94; 93-13-019 (Order 372), § 246-254-120, filed 6/8/93, effective 7/9/93. Statutory Authority: RCW 43.70.110. 91-22-027 (Order 208), § 246-254-120, filed 10/29/91, effective 11/29/91. Statutory Authority: RCW 43.70.040. 91-02-049 (Order 121), recodified as § 246-254-120, filed 12/27/90, effective 1/31/91. Statutory Authority: RCW 70.98.080. 87-01-031 (Order 2450), § 402-70-070, filed 12/11/86; 79-12-073 (Order 1459), § 402-70-070, filed 11/30/79, effective 1/1/80.]

WAC 246-254-130 Radioactive waste disposal site surveillance fee. (1) The department shall charge a fee for radioactive waste site surveillance.

(2) The fee shall be an added charge on each cubic foot of low-level waste disposed at the disposal site.

(3) The department shall authorize by contract the operator of a low-level radioactive waste disposal site to collect the fee from waste generators and brokers.

(4) The department shall provide for reimbursement to the site operator for collection costs.

(5) The department shall calculate the fee collected from waste generators and brokers as required under RCW 70.98.085 and the fee shall not exceed the statutory limit specified in that section.

(6) The site operator shall remit the fee to the department as follows:

(a) Quarterly for the first seven quarters of each biennium.

(b) By July 15 for the final quarter of the biennium.

[Statutory Authority: RCW 43.70.040. 91-02-049 (Order 121), recodified as § 246-254-130, filed 12/27/90, effective 1/31/91. Statutory Authority: RCW 70.98.085. 90-11-126 (Order 050), § 402-70-073, filed 5/23/90, effective 6/23/90.]

WAC 246-254-140 Fees for uranium, thorium and other mineral processors. (1) Persons licensed or authorized to receive, possess, or use natural uranium and its decay daughters for the extraction of uranium or thorium compounds or for the reclamation and disposal of the associated tailings or waste shall pay:

(a) Initial application fee of thirty-five thousand dollars; and

(b) Quarterly billings for actual costs to the department.

(2) The department shall bill the uranium or thorium milling licensee quarterly for the department's actual cost of:

(a) Reviewing and issuing a license in excess of the initial application fee;

(b) Determining the licensee's compliance with terms and conditions of the license;

(c) Reviewing license amendment requests;

(d) Maintaining a uranium mill program which is compatible with the requirements of the United States Nuclear Regulatory Commission;

(e) Determining and assuring compliance with chapter 173-11 WAC; and

(f) Reviewing and processing an application for renewal.

(3) The department shall delineate in the quarterly billing the staff, laboratory, and support service costs.

(4) The department:

(a) Shall process any initial application only upon receipt of the full fee specified; and

(b) May return an application to an applicant if no payment is received.

(5) The department shall credit the initial application fee to the applicants' quarterly billing.

(6) Mineral processors requiring licenses for naturally occurring radioactive material in excess of exempt concentrations shall pay:

(a) Initial application fee of twenty-seven thousand dollars; and

(b) Quarterly billings not to exceed forty thousand dollars.

(7) The department shall bill mineral processor licensees quarterly for the department's actual cost of:

(a) Processing and issuing a license in excess of the initial application fee;

(b) Determining the licensee's compliance with terms and conditions of the license;

(c) Reviewing and processing amendment and renewal requests; and

(d) Determining and assuring compliance with chapter 173-11 WAC.

[Statutory Authority: RCW 43.70.110. 91-22-027 (Order 208), § 246-254-140, filed 10/29/91, effective 11/29/91.]

WAC 246-254-150 Fees for perpetual care and maintenance. (1) Persons with licenses specifically authorizing the receipt, possession, or use of natural uranium and its decay daughters for the extraction of uranium or thorium compounds or for the reclamation and disposal of the associated tailings or waste shall:

(a) Make quarterly payments of twenty cents per kilogram of uranium or thorium compound milled out of the raw ore;

(b) Remit this payment within thirty days after the end of each calendar quarter; and

(c) Pay to the department a minimum of two hundred fifty thousand dollars (1978 dollars) to cover the costs of long-term surveillance prior to the termination of a uranium or thorium mill license.

(2) Licensees under this section may make additional payments to meet the minimum, prior to the release of any surety arranged by the licensee in accordance with WAC 246-235-086(4).

[Statutory Authority: RCW 70.98.050. 00-08-013, § 246-254-150, filed 3/24/00, effective 4/24/00. Statutory Authority: RCW 43.70.110. 91-22-027 (Order 208), § 246-254-150, filed 10/29/91, effective 11/29/91. Statutory Authority: RCW 43.70.040. 91-02-049 (Order 121), recodified as § 246-254-150, filed 12/27/90, effective 1/31/91. Statutory Authority: RCW 70.98.080. 87-01-031 (Order 2450), § 402-70-080, filed 12/11/86.]

WAC 246-254-160 Fees for airborne emissions of radioactive materials. (1) The department shall waive the fee of one thousand dollars for each air emission permit

application for those facilities who pay the fees specified in WAC 246-254-070, 246-254-080, 246-254-090, and 246-254-100; however, those facilities shall pay costs associated with direct staff time of the air emissions program in accordance with WAC 246-254-120 (1)(e).

(2) For emission units at all other facilities:

(a) Application. The applicant shall submit a fee of one thousand dollars for each air emission license to the department with each application.

(i) The department shall process only those applications accompanied by the fee prescribed in (a) of this subsection. The department shall return any application submitted without the prescribed fee to the applicant.

(ii) The applicant shall pay any additional actual costs involved with processing the application upon receipt of a bill from the department on a calendar quarter basis.

(iii) The department shall credit the initial application fee to the applicant's quarterly billings.

(b) Operations. The department shall charge each emission unit operator the actual expenses incurred by the department in determining compliance with the provisions of established regulations and conditions of the air emission license; and:

(i) Bill the operator each calendar quarter until the air emission license is terminated by the department.

(ii) Specify in the quarterly bill the staff, laboratory, and support service costs associated with the regulatory activities conducted by the department.

(c) Amendment. The department shall add and include the actual costs incurred by the department in reviewing and processing an amendment to an air emission license in the department's calendar quarter charge for regulatory activities.

[Statutory Authority: Chapters 70.98 and 70.94 RCW and chapter 173-480 WAC. 94-07-010, § 246-254-160, filed 3/4/94, effective 4/4/94. Statutory Authority: RCW 43.70.110. 91-22-027 (Order 208), § 246-254-160, filed 10/29/91, effective 11/29/91. Statutory Authority: RCW 43.70.040. 91-02-049 (Order 121), recodified as § 246-254-160, filed 12/27/90, effective 1/31/91. Statutory Authority: Chapter 70.98 RCW. 88-17-061 (Order 2670), § 440-44-062, filed 8/17/88.]

WAC 246-254-170 Failure by applicant or licensee to pay prescribed fees. In any case where the department finds that an applicant, a permittee, a registrant, or a licensee failed to pay a prescribed fee or actual costs incurred during a calendar quarter, the department: (1) Shall not process any application and (2) may suspend or revoke any license, permit, registration, or approval involved; or (3) may issue an order with respect to licensed, permitted, or registered activities as the department determines appropriate or necessary in order to carry out the provisions of this chapter.

[Statutory Authority: RCW 43.70.110. 91-22-027 (Order 208), § 246-254-170, filed 10/29/91, effective 11/29/91. Statutory Authority: RCW 43.70.-040. 91-02-049 (Order 121), recodified as § 246-254-170, filed 12/27/90, effective 1/31/91. Statutory Authority: RCW 70.98.080. 87-01-031 (Order 2450), § 402-70-090, filed 12/11/86; 79-12-073 (Order 1459), § 402-70-090, filed 11/30/79, effective 1/1/80.]

Chapter 246-260 WAC
WATER RECREATION FACILITIES

WAC

246-260-001 Purpose and authority.
246-260-010 Definitions.
246-260-021 Construction permit.
246-260-031 General design, construction, and equipment for all WRF pool facilities.
246-260-041 Swimming pool design, construction, and equipment.
246-260-051 Spa pool design, construction, and equipment.
246-260-061 Special design and construction provisions for hotels and motels (transient accommodations) serving fewer than fifteen living units and for spas in individual hotel/motel rooms.
246-260-071 Wading pool design, construction, and equipment.
246-260-081 Spray pool design, construction, and equipment.
246-260-091 Specialty design features.

POOL OPERATION REQUIREMENTS

246-260-101 Operating permit.
246-260-111 Water quality standards, analysis, and sample collection.
246-260-121 Monitoring, reporting, and recordkeeping.
246-260-131 Operation of water recreation facilities.
246-260-141 Water recreation facility pools not in operation.
246-260-151 Restrictions on animals.

ADMINISTRATIVE RULES

246-260-171 Compliance.
246-260-180 Bathing beaches.
246-260-181 Surveillance.
246-260-191 Technical advisory committee.
246-260-201 Variance.
246-260-211 Enforcement.
246-260-221 Hearings.
246-260-9901 Fees.
246-260-998 Severability.
246-260-999 Appendix A—Water quality standards.
246-260-99901 Appendix B—Personnel training and certifications.
246-260-99902 Appendix C—First-aid kits for pool facilities.

DISPOSITION OF SECTIONS FORMERLY CODIFIED IN THIS CHAPTER

246-260-020 General administration. [Statutory Authority: RCW 43.20.050. 91-02-051 (Order 124B), recodified as § 246-260-020, filed 12/27/90, effective 1/31/91. Statutory Authority: RCW 70.90.120. 90-07-010 (Order 042), § 248-98-005, filed 3/12/90, effective 4/12/90.] Repealed by 04-18-096, filed 9/1/04, effective 10/31/04. Statutory Authority: Chapters 70.90 and 43.20 RCW.

246-260-030 Construction permit. [Statutory Authority: RCW 43.20.050. 91-02-051 (Order 124B), recodified as § 246-260-030, filed 12/27/90, effective 1/31/91. Statutory Authority: RCW 70.90.120. 90-07-010 (Order 042), § 248-98-010, filed 3/12/90, effective 4/12/90; Regulation .98.010, effective 3/11/60.] Repealed by 04-18-096, filed 9/1/04, effective 10/31/04. Statutory Authority: Chapters 70.90 and 43.20 RCW.

246-260-040 Operating permit. [Statutory Authority: RCW 70.90.-120. 92-02-020 (Order 226B), § 246-260-040, filed 12/23/91, effective 1/23/92. Statutory Authority: RCW 43.20.050. 91-02-051 (Order 124B), recodified as § 246-260-040, filed 12/27/90, effective 1/31/91. Statutory Authority: RCW 70.90.120. 90-07-010 (Order 042), § 248-98-015, filed 3/12/90, effective 4/12/90.] Repealed by 04-18-096, filed 9/1/04, effective 10/31/04. Statutory Authority: Chapters 70.90 and 43.20 RCW.

246-260-050 Compliance. [Statutory Authority: RCW 70.90.120. 92-02-020 (Order 226B), § 246-260-050, filed 12/23/91, effective 1/23/92. Statutory Authority: RCW 43.20.-050. 91-02-051 (Order 124B), recodified as § 246-260-050, filed 12/27/90, effective 1/31/91. Statutory Authority: RCW 70.90.120. 90-07-010 (Order 042), § 248-98-020, filed 3/12/90, effective 4/12/90; Regulation .98.020, effective 3/11/60.] Repealed by 04-18-096, filed 9/1/04, effective 10/31/04. Statutory Authority: Chapters 70.90 and 43.20 RCW.

246-260-060 Surveillance. [Statutory Authority: RCW 70.90.120. 92-02-020 (Order 226B), § 246-260-060, filed 12/23/91, effective 1/23/92. Statutory Authority: RCW 43.20.050. 91-02-051 (Order 124B), recodified as § 246-260-060, filed 12/27/90, effective 1/31/91. Statutory Authority: RCW 70.90.120. 90-07-010 (Order 042), § 248-98-025, filed 3/12/90, effective 4/12/90.] Repealed by 04-18-096, filed 9/1/04, effective 10/31/04. Statutory Authority: Chapters 70.90 and 43.20 RCW.

246-260-070 Water quality standards, analysis, and sample collection. [Statutory Authority: RCW 70.90.120. 92-02-020 (Order 226B), § 246-260-070, filed 12/23/91, effective 1/23/92. Statutory Authority: RCW 43.20.050. 91-02-051 (Order 124B), recodified as § 246-260-070, filed 12/27/90, effective 1/31/91. Statutory Authority: RCW 70.90.120. 90-07-010 (Order 042), § 248-98-030, filed 3/12/90, effective 4/12/90; Regulation .98.030, effective 3/11/60.] Repealed by 04-18-096, filed 9/1/04, effective 10/31/04. Statutory Authority: Chapters 70.90 and 43.20 RCW.

246-260-080 Monitoring, reporting, and recordkeeping. [Statutory Authority: RCW 70.90.120. 92-02-020 (Order 226B), § 246-260-080, filed 12/23/91, effective 1/23/92. Statutory Authority: RCW 43.20.050. 91-02-051 (Order 124B), recodified as § 246-260-080, filed 12/27/90, effective 1/31/91. Statutory Authority: RCW 70.90.-120. 90-07-010 (Order 042), § 248-98-035, filed 3/12/90, effective 4/12/90.] Repealed by 04-18-096, filed 9/1/04, effective 10/31/04. Statutory Authority: Chapters 70.90 and 43.20 RCW.

246-260-090 Swimming pool design, construction, and equipment. [Statutory Authority: RCW 70.90.120. 92-02-020 (Order 226B), § 246-260-090, filed 12/23/91, effective 1/23/92. Statutory Authority: RCW 43.20.050. 91-02-051 (Order 124B), recodified as § 246-260-090, filed 12/27/90, effective 1/31/91. Statutory Authority: RCW 70.90.120. 90-07-010 (Order 042), § 248-98-050, filed 3/12/90, effective 4/12/90; § 248-98-050, filed 10/3/67; Regulation .98.050, effective 3/11/60.] Repealed by 04-18-096, filed 9/1/04, effective 10/31/04. Statutory Authority: Chapters 70.90 and 43.20 RCW.

246-260-100 Operation of swimming pool facilities. [Statutory Authority: RCW 70.90.120. 92-02-020 (Order 226B), § 246-260-100, filed 12/23/91, effective 1/23/92. Statutory Authority: RCW 43.20.050. 91-02-051 (Order 124B), recodified as § 246-260-100, filed 12/27/90, effective 1/31/91. Statutory Authority: RCW 70.90.-120. 90-07-010 (Order 042), § 248-98-060, filed 3/12/90, effective 4/12/90; Regulation .98.060, effective 3/11/60.] Repealed by 04-18-096, filed 9/1/04, effective 10/31/04. Statutory Authority: Chapters 70.90 and 43.20 RCW.

246-260-110 Spa pool design, construction, and equipment. [Statutory Authority: RCW 70.90.120. 92-02-020 (Order 226B), § 246-260-110, filed 12/23/91, effective 1/23/92. Statutory Authority: RCW 43.20.050. 91-02-051 (Order 124B), recodified as § 246-260-110, filed 12/27/90, effective 1/31/91. Statutory Authority: RCW 70.90.120. 90-07-010 (Order 042), § 248-98-040, filed 3/12/90, effective 4/12/90; Regulation .98.040, effective 3/11/60.] Repealed by 04-18-096, filed 9/1/04, effective 10/31/04. Statutory Authority: Chapters 70.90 and 43.20 RCW.

246-260-120 Operation of spa pool facilities. [Statutory Authority: RCW 70.90.120. 92-02-020 (Order 226B), § 246-260-120, filed 12/23/91, effective 1/23/92. Statutory Authority: RCW 43.20.050. 91-02-051 (Order 124B), recodified as § 246-260-120, filed 12/27/90, effective 1/31/91. Statutory Authority: RCW 70.90.120. 90-07-010 (Order 042), § 248-98-045, filed 3/12/90, effective 4/12/90.] Repealed by 04-18-096, filed 9/1/04, effective 10/31/04. Statutory Authority: Chapters 70.90 and 43.20 RCW.

246-260-130 Wading pool design, construction, and equipment. [Statutory Authority: RCW 70.90.120. 92-02-020 (Order 226B), § 246-260-130, filed 12/23/91, effective 1/23/92. Statutory Authority: RCW 43.20.050. 91-02-051 (Order 124B), recodified as § 246-260-130, filed 12/27/90, effective 1/31/91. Statutory Authority: RCW 70.90.120. 90-07-010 (Order 042), § 248-98-080, filed 3/12/90, effective 4/12/90; Regulation .98.080, effective 3/11/60.] Repealed by 04-18-096, filed 9/1/04, effective 10/31/04. Statutory Authority: Chapters 70.90 and 43.20 RCW.

246-260-140 Operation of wading pool facilities. [Statutory Authority: RCW 70.90.120. 92-02-020 (Order 226B), § 246-260-140, filed 12/23/91, effective 1/23/92. Statutory Authority: RCW 43.20.050. 91-02-051 (Order 124B), recodified as § 246-260-140, filed 12/27/90, effective 1/31/91. Statutory Authority: RCW 70.90.120. 90-07-010 (Order 042), § 248-98-085, filed 3/12/90, effective 4/12/90.] Repealed by 04-18-096, filed 9/1/04, effective 10/31/04. Statutory Authority: Chapters 70.90 and 43.20 RCW.

246-260-150 Spray pool design, construction, and equipment. [Statutory Authority: RCW 70.90.120. 92-02-020 (Order 226B), § 246-260-150, filed 12/23/91, effective 1/23/92. Statutory Authority: RCW 43.20.050. 91-02-051 (Order 124B), recodified as § 246-260-150, filed 12/27/90, effective 1/31/91. Statutory Authority: RCW 70.90.120. 90-07-010 (Order 042), § 248-98-090, filed 3/12/90, effective 4/12/90; Regulation .98.090, effective 3/11/60.] Repealed by 04-18-096, filed 9/1/04, effective 10/31/04. Statutory Authority: Chapters 70.90 and 43.20 RCW.

246-260-160 Operation of spray pool facilities. [Statutory Authority: RCW 70.90.120. 92-02-020 (Order 226B), § 246-260-160, filed 12/23/91, effective 1/23/92. Statutory Authority: RCW 43.20.050. 91-02-051 (Order 124B), recodified as § 246-260-160, filed 12/27/90, effective 1/31/91. Statutory Authority: RCW 70.90.120. 90-07-010 (Order 042), § 248-98-095, filed 3/12/90, effective 4/12/90.] Repealed by 04-18-096, filed 9/1/04, effective 10/31/04. Statutory Authority: Chapters 70.90 and 43.20 RCW.

246-260-170 Water recreation facility pools not in operation. [Statutory Authority: RCW 43.20.050. 91-02-051 (Order 124B), recodified as § 246-260-170, filed 12/27/90, effective 1/31/91. Statutory Authority: RCW 70.90.-120. 90-07-010 (Order 042), § 248-98-098, filed 3/12/90, effective 4/12/90.] Repealed by 04-18-096, filed 9/1/04, effective 10/31/04. Statutory Authority: Chapters 70.90 and 43.20 RCW.

246-260-200 Water recreation industry requirements. [Statutory Authority: RCW 70.90.120. 92-02-020 (Order 226B), § 246-260-200, filed 12/23/91, effective 1/23/92. Statutory Authority: RCW 43.20.050. 91-02-051 (Order 124B), recodified as § 246-260-200, filed 12/27/90, effective 1/31/91. Statutory Authority: RCW 70.90.-120. 90-07-010 (Order 042), § 248-98-100, filed 3/12/90, effective 4/12/90; Regulation .98.100, effective 3/11/60.] Repealed by 04-18-096, filed 9/1/04, effective 10/31/04. Statutory Authority: Chapters 70.90 and 43.20 RCW.

246-260-210 Technical advisory committee. [Statutory Authority: RCW 70.90.120. 92-02-020 (Order 226B), § 246-260-210, filed 12/23/91, effective 1/23/92. Statutory Authority: RCW 43.20.050. 91-02-051 (Order 124B), recodified as § 246-260-210, filed 12/27/90, effective 1/31/91. Statutory Authority: RCW 70.90.120. 90-07-010 (Order 042), § 248-98-102, filed 3/12/90, effective 4/12/90.] Repealed by 04-18-096, filed 9/1/04, effective 10/31/04. Statutory Authority: Chapters 70.90 and 43.20 RCW.

246-260-220 Restrictions on animals. [Statutory Authority: RCW 43.20.050. 91-02-051 (Order 124B), recodified as § 246-260-220, filed 12/27/90, effective 1/31/91. Statutory Authority: RCW 70.90.120. 90-07-010 (Order 042), § 248-98-104, filed 3/12/90, effective 4/12/90.] Repealed by 04-18-096, filed 9/1/04, effective 10/31/04. Statutory Authority: Chapters 70.90 and 43.20 RCW.

246-260-230 Variance. [Statutory Authority: RCW 43.20.050. 91-02-051 (Order 124B), recodified as § 246-260-230, filed 12/27/90, effective 1/31/91. Statutory Authority: RCW 70.90.120. 90-07-010 (Order 042), § 248-98-110, filed 3/12/90, effective 4/12/90; Order 715, § 248-98-110, filed 9/14/72.] Repealed by 04-18-096, filed 9/1/04, effective 10/31/04. Statutory Authority: Chapters 70.90 and 43.20 RCW.

246-260-240 Substitution. [Statutory Authority: RCW 70.90.120. 92-02-020 (Order 226B), § 246-260-240, filed 12/23/91, effective 1/23/92. Statutory Authority: RCW 43.20.050. 91-02-051 (Order 124B), recodified as § 246-260-240, filed 12/27/90, effective 1/31/91. Statutory Authority: RCW 70.90.120. 90-07-010 (Order 042), § 248-98-120, filed 3/12/90, effective 4/12/90; Order 715, § 248-98-120, filed 9/14/72.] Repealed by 04-18-096, filed 9/1/04, effective 10/31/04. Statutory Authority: Chapters 70.90 and 43.20 RCW.

246-260-250 Enforcement. [Statutory Authority: RCW 70.90.120. 92-02-020 (Order 226B), § 246-260-250, filed 12/23/91, effective 1/23/92. Statutory Authority: RCW 43.20.050. 91-02-051 (Order 124B), recodified as § 246-260-250, filed 12/27/90, effective 1/31/91. Statutory Authority: RCW 70.90.120. 90-07-010 (Order 042), § 248-98-130, filed 3/12/90, effective 4/12/90.]

	Repealed by 04-18-096, filed 9/1/04, effective 10/31/04. Statutory Authority: Chapters 70.90 and 43.20 RCW.
246-260-260	Hearings. [Statutory Authority: RCW 70.90.120. 92-02-020 (Order 226B), § 246-260-260, filed 12/23/91, effective 1/23/92. Statutory Authority: RCW 43.20.-050. 91-02-051 (Order 124B), recodified as § 246-260-260, filed 12/27/90, effective 1/31/91. Statutory Authority: RCW 70.90.120. 90-07-010 (Order 042), § 248-98-135, filed 3/12/90, effective 4/12/90.] Repealed by 04-18-096, filed 9/1/04, effective 10/31/04. Statutory Authority: Chapters 70.90 and 43.20 RCW.
246-260-990	Fees. [Statutory Authority: RCW 43.70.040. 91-02-050 (Order 122), § 246-260-990, filed 12/27/90, effective 1/31/91.] Repealed by 94-11-056, filed 5/11/94, effective 6/11/94. Statutory Authority: RCW 70.90.150 and 43.20B.020.

WAC 246-260-001 Purpose and authority. (1) The purpose of this chapter is to protect the health, safety, and welfare of users of water recreation facilities (WRF). This chapter is established per RCW 70.90.120.

(2) This chapter does not apply to:

(a) Any water recreation facility for the sole use of residents and invited guests at a single-family dwelling;

(b) Any water recreation facility for the sole use of residents and invited guests of a duplex owned by the residents;

(c) Therapeutic water facilities operated exclusively for physical therapy or rehabilitation under the supervision of a licensed medical practitioner; and

(d) Steam baths and saunas.

(3) Requirements for recreational water contact facilities, including water slides, speed slides and wave pools are contained in chapter 246-262 WAC.

[Statutory Authority: Chapters 70.90 and 43.20 RCW. 04-18-096, § 246-260-001, filed 9/1/04, effective 10/31/04. Statutory Authority: RCW 43.20.-050. 91-02-051 (Order 124B), recodified as § 246-260-001, filed 12/27/90, effective 1/31/91. Statutory Authority: RCW 70.90.120. 90-07-010 (Order 042), § 248-98-003, filed 3/12/90, effective 4/12/90.]

WAC 246-260-010 Definitions. (1) "Abbreviations" (technical):

"CPR" means cardiopulmonary resuscitation;

"DE" means diatomaceous earth;

"F" means Fahrenheit;

"fps" means feet per second;

"gpm" means gallons per minute;

"mg/l" means milligrams per liter. When requirements in this regulation specify limits for liquid volume measurements using mg/l or ppm, either may be used depending on the type of testing equipment available;

"ppm" means parts per million. See notation under mg/l for use;

"TU" means turbidity unit as measured by the nephelometric method.

(2) Acronyms:

(a) "ALTI" means Advanced Lifeguard Training International;

(b) "ANSI" means American National Standards Institute;

(c) "APHA" means American Public Health Association;

(d) "ARC" means American Red Cross;

(e) "ASA" means American Standards Association;

(f) "ASHRAE" means American Society of Heating, Refrigeration and Air Conditioning Engineers;

(g) "ASTM" means American Society for Testing and Materials;

(h) "AWWA" means American Waterworks Association;

(i) "E&A" means Ellis and Associates;

(j) "CPSC" means U.S. Consumer Product Safety Commission;

(k) "EPA" means U.S. Environmental Protection Agency;

(l) "FINA" means Federation Internationale de Natation Amateur;

(m) "IAPMO" means International Association of Plumbing and Mechanical Officials;

(n) "NAUI" means National Association of Underwater Instructors;

(o) "NSF" means National Sanitation Foundation;

(p) "NSPI" means National Spa and Pool Institute;

(q) "PADI" means Professional Association of Diving Instructors;

(r) "UBC" means Uniform Building Code;

(s) "UL" means Underwriters' Laboratories;

(t) "WRF" means water recreation facility;

(u) "WRPA" means Washington Recreation and Parks Association;

(v) "WSDA" means Washington state department of agriculture; and

(w) "YMCA" means Young Men's Christian Association.

(3) Definitions:

"Approved" means the department or local health officer has stated in writing that the design plans and specifications are in accordance with this chapter.

"Architect" means a registered architect currently licensed under chapter 18.08 RCW in Washington state.

"Attendant" means a person appointed by the owner or manager meeting the training requirements of this chapter who monitors activities and conditions for the purpose of ensuring bather safety.

"Bathing beach" means a bathing place, together with buildings and appurtenances, on a natural pond, lake, stream, or other body of fresh or salt water that is open to the public for bathing by express permission of the owner, operated for a fee, or openly advertised as a place for bathing by the public.

"Board" means the state board of health.

"Commercial strength ammonia" means ammonia having a strength of twenty-six degrees Baume'.

"Communication system" means any combination of devices permitting the passage of messages between personnel and/or personnel and bathers. Systems can include but are not limited to two-way radios, hard wired intercoms, horns, whistles, hand signals, direct voice, signs, or equivalent.

"Contaminant" means any physical, chemical, or biological substance present in the WRF water which may adversely affect the health or safety of the bather or the quality of the water.

"Cross-connection" means any physical arrangement connecting:

(a) Potable water system directly or indirectly, with anything other than another potable water system; or

(b) WRF pool to any water source capable of contaminating either the WRF pool, its components, or potable water source as a result of backflow.

"Department" means the state department of health.

"Deep water" means water greater than five feet in depth.

"Diving envelope" means the minimum dimensions of an area within the pool necessary to provide entry from a diving board, platform, or pool decking intended for users to dive.

"Engineer" means a registered professional engineer currently licensed under chapter 18.43 RCW.

"Fall zones" mean the areas under and around play toys where a person playing on them could fall. These areas should be free of obstacles or other equipment so that there's plenty of room. Basic guidelines include the following:

(a) Fall zones should extend a minimum of six feet in all directions from the perimeter of the play toy equipment.

(b) If the height of an adjacent play toy is thirty inches or more, the minimum distance between pieces of play equipment should be at least nine feet.

"General use pool" means any swimming, spa, wading, or spray pool regulated by this chapter not meeting the definition of a "limited use pool."

"Handhold" means a structure not over twelve inches above the water line around the perimeter of the pool wall, affording physical means for the bather to grasp the pool sides.

"Illness or injury report" means the written record of all facts regarding an injury or illness associated with the WRF.

"Innovative design feature" means a design feature, equipment, device, or operative procedure not specifically covered by these rules or chapter 246-262 WAC.

"Licensed medical practitioner" includes medical doctor, osteopath, chiropractor, naturopath, and medical therapist currently licensed in Washington state.

"Lifeguard" means a person meeting the training requirements of these rules appointed by the owner or manager to maintain surveillance over the bathers on the deck or in the pool and to supervise bather safety.

"Lifeguard station" means designated work station of a lifeguard.

"Lifesaving equipment" means emergency equipment and barrier protection.

"Lifesaving Society" means the organization in Canada that establishes training requirements and standards for lifeguard training.

"Limited use pool" means any swimming, spa, wading, or spray pool regulated by this chapter at an apartment, boarding home, condominium, fraternity, home owners association, hotel, mobile home park, motel, recreational vehicle park, sorority or rental housing unit for the use of the persons living or residing at the facility and their resident's invited guests.

When organized programs are provided at the facility (including, but not limited to, formal swimming or diving lessons, swim meets, or exercise classes), for users besides those specified under the limited use category, the pool facility shall be considered to be a general use pool during periods of such activity.

"Local health officer" means the health officer of the city, county, or city-county department or district or a representative authorized by the local health officer.

"Owner" means a person owning and responsible for a WRF or their authorized agent.

"Person" means an individual, firm, partnership, copartnership, corporation, company, association, club, government entity, or organization of any kind.

"Physical plant" refers to pool shell, piping, lighting, ventilation, locker rooms, chemical storage rooms, mechanical rooms, or other structural facility components that are not readily modified. It does not include pumps, filters or disinfection systems.

"Play toy" is a water feature added to a pool for use by bathers that provides activity or action that enhances the overall use of the water environment. Such feature may include, but not be limited to, fixed stationary features, inflatable or floatable equipment, or other equipment with the intent to invite bathers to play on or around the feature.

"Pool" means swimming pool, wading pool, spray pool, or spa pool or the like.

"Private club" means a group or organization requiring membership enrollment.

"Radius of curvature" means the radius arc denoting the curved surface from the point of departure from the springline (vertical sidewall) of the pool to the pool bottom.

"Response time" means time between bather distress and initiation of rescue assistance contact by a lifeguard in facilities providing lifeguards.

"Recreational water contact facility" means an artificial water associated facility with design and operational features that provide patron recreational activity which is different from that associated with a conventional swimming pool and purposefully involves immersion of the body partially or totally in the water, and that includes but is not limited to water slides, wave pools, and water lagoons. These facilities are regulated by chapter 246-262 WAC.

"Secretary" means the secretary of the department of health.

"Serious injury" means any injury:

(a) Requiring emergency service response where a person requires medical treatment as determined by the emergency medical response personnel; or

(b) Resulting in a person seeking medical attention at a medical facility, hospital emergency room or admittance to a hospital.

"Shallow water" means water equal to or less than five feet in depth.

"Shallow water lifeguard" means a person appointed by the owner or manager to supervise bather safety in water depths not exceeding five feet who meets the training requirements of this chapter.

"Spa pool" means a pool designed for relaxation or recreational use where the user is usually sitting, reclining, or at rest and the pool is not drained, cleaned, and refilled for each user. The spa pool may include, but not be limited to, hydrojet circulation, hot water, cold water, mineral baths, air induction bubbles in any combination.

"Spray pool" means a pool or artificially constructed depression for use by bathers in which water is sprayed, but is not allowed to pond in the bottom of the pool.

"Springline" means the point where the pool wall breaks from vertical and begins its arc in the radius of curvature (for cove construction) to the bottom of the pool.

"Swimming pool" means any structure, basin, chamber, or tank containing an artificial body of water for swimming, diving, relaxation, or recreational bathing and having a depth of two feet or more at any point and including all associated facilities.

"Swim spa" means a type of spa pool used primarily for stationary swimming.

"Turnover time" means the minimum time necessary to circulate the entire volume of the pool facility through the treatment system.

"Wading pool" means any artificial pool of water equal to or less than two feet deep and intended for wading purposes.

"Walking surface" means any surface used as a direct access surface for a pool area and the walking surface's change room facilities where the user is barefoot.

"Water treatment operator" means the appointed person operating the physical and mechanical equipment and performing related water quality monitoring and associated record keeping for proper operation of the physical facility.

"Water recreation facility (WRF)" means any artificial basin or other structure containing water used or intended to be used for recreation, bathing, relaxation or swimming, where body contact with the water occurs or is intended to occur and includes auxiliary buildings and appurtenances. The term includes, but is not limited to:

(a) Conventional swimming pools, wading pools, and spray pools;

(b) Recreational water contact facilities as defined under RCW 70.90.110 and regulated under chapter 246-262 WAC;

(c) Spa pools and tubs using hot water, cold water, mineral water, air induction, or hydrojets; and

(d) Any area designated for swimming in natural waters with artificial boundaries within the waters.

[Statutory Authority: Chapters 70.90 and 43.20 RCW. 04-18-096, § 246-260-010, filed 9/1/04, effective 10/31/04. Statutory Authority: RCW 70.90.-120. 92-02-020 (Order 226B), § 246-260-010, filed 12/23/91, effective 1/23/92. Statutory Authority: RCW 43.20.050. 91-02-051 (Order 124B), recodified as § 246-260-010, filed 12/27/90, effective 1/31/91. Statutory Authority: RCW 70.90.120. 90-07-010 (Order 042), § 248-98-001, filed 3/12/90, effective 4/12/90; Regulation .98.001, effective 3/11/60.]

WAC 246-260-021 Construction permit. (1) Prior to construction, alteration or modification of a WRF pool, except for routine maintenance, an owner shall obtain a construction permit. In order to obtain a construction permit, the owner shall submit a completed application package to the department or local health officer for review and approval. The application package shall include:

(a) A completed construction permit application form obtained from the department or local health officer; and

(b) Three sets of plans and specifications prepared, stamped and signed by an engineer or architect.

(2) Plans must be drawn to scale and in sufficient detail to completely illustrate that construction is in compliance with this chapter. The plans shall include:

(a) One plan view;

(b) One or more cross-sections through the main drain;

(c) Overall plan showing the pool in relation to other facilities in the area;

(d) Detailed view of the equipment layout and the associated room or location;

(e) A piping schematic showing piping configuration, pipe size, valves, inlets, main drains, over flow outlets, make-up water, and backwash from the filter;

(f) Dimensional drawings of pool bottom and sidewalls;

(g) Specifications of all required components; and

(h) Other information requested by the department or local health officer.

(3) Only applications and plans that the department or local health officer determines are complete may be considered for permit approval or denial. The department or the local health officer shall approve or deny a complete application within thirty days.

(4) Owners may submit a construction permit application proposing a WRF that incorporates innovative design features not specifically covered by these regulations or chapter 246-262 WAC. At least thirty days prior to development of final plans and specifications, the owner shall present their proposal at a preliminary design conference with the department or local health officer. The owners or their architects or engineers shall address the health and safety issues, including maintenance and operation of the proposed innovative design, and good engineering practice. The department or local health officer may require additional information and additional review or justification by a safety engineer or other qualified individual before approving or denying the application. An application for a construction permit for a water recreation facility may not be approved unless, notwithstanding a noncompliant design, the health and safety purposes behind the requirements of this chapter would be met. An applicant (or the architect or engineer acting on behalf of the applicant) shall provide adequate documentation to meet these requirements including, but not limited to:

(a) Protection from drowning, diving injury, entrapment, impact or falling hazards, tripping or slipping hazards;

(b) Maintenance of water and air quality, including equivalent disinfection, filtration, control of pH, physical water conditions, water clarity and prevention of contamination to preclude illness;

(c) Age appropriate designs and means to control these features for the appropriate range of users.

(5) Owners shall ensure any WRF construction, modification, or alteration is completed according to approved plans and specifications.

(6) Upon completion of WRF construction, modification, or alteration and before an operating permit is issued, owners shall:

(a) Submit to the department or local health officer a construction report signed by an engineer or architect stating that to the best of the engineer's or architect's knowledge and belief, the installation is in compliance with the approved plans. The engineer's and architect's certification of the above condition in no way relieves any other party from meeting requirements imposed by contract or other regulations, including commonly accepted industry practice; and

(b) Notify the department or local health officer at least five working days before intended use of the facility.

(7) The construction permit issued by the department or local health officer is valid eighteen months. The department or local health officer may grant construction permit renewals which are valid for one year. The owner is responsible to resubmit for a reapplication for a construction permit.

[Statutory Authority: Chapters 70.90 and 43.20 RCW. 04-18-096, § 246-260-021, filed 9/1/04, effective 10/31/04.]

WAC 246-260-031 General design, construction, and equipment for all WRF pool facilities. (See additional design and construction requirements for swimming pools in WAC 246-260-041, for spa pools in WAC 246-260-051 and 246-260-061, for wading pools in WAC 246-260-071, for spray pools in WAC 246-260-081 and for specialty design conditions in WAC 246-260-091. See chapter 246-262 WAC for specific requirements for water park type features.)

(1) **Location:** Owners shall locate pools to minimize surface drainage and other potential sources of pollution from entering the pool.

(2) **Materials:** Owners shall use only structure and equipment materials that are nontoxic, durable, inert, and easily cleanable.

(3) **Walking surfaces:** Owners shall design and maintain walking surfaces:

(a) Sloping away from the pool or pools;

(b) Sloping a minimum of one-fourth inch per foot to drain;

(c) Having a nonslip finish;

(d) Not having an abrupt change in height of greater than one-half inch, a gap no greater than one-half inch in width, or a crumbling surface presenting a potential tripping hazard;

(e) Equipped with sufficient drains to prevent standing water; and

(f) Of easily cleanable, impervious finishes.

(4) **Barriers for new construction and remodeling:**

(a) Owners shall provide barriers to prevent unauthorized persons from gaining access to pools. Spray pool facilities without standing water are exempt from barrier requirements of this section.

(b) Barriers at limited use pools must be at least sixty inches high.

(c) Barriers at general use pools must be at least seventy-two inches high.

(d) Barriers, including windows, (see figures 031.1 and 031.2) may not:

(i) Allow passage of a four-inch diameter sphere; or

(ii) Have spaces between vertical members greater than a width of one and three-quarter inches if the distance between the tops of horizontal members are spaced less than forty-five inches apart.

(e) Solid barriers may not have indentations or protrusions, other than normal construction tolerances and masonry joints.

(f) Barriers must have self-closing, self-latching gates or doors that provide either:

(i) A mechanism that uses a continuously locked latch, coded lock or other equivalent access control system that always requires a key or code to enter pool area. If the latch is less than sixty inches from the ground, the barrier must have an eighteen-inch radius of solid material around the latch (see figure 031.2) to preclude a child on the outside of the barrier from reaching through the gate or barrier and opening the latch and entering the pool; or

(ii) A latch height of sixty inches or more from the ground.

(g) Restricted area service entrances are exempt from door or gate requirements provided that no public access is available.

(h) Lifeguarded pools are not required to have a self-closing, self-latching gate during the period a pool is in use. Facility gates shall be closed and locked during nonuse periods.

(i) Barrier heights are measured on the side outside the pool enclosure area. Owners shall ensure that surrounding ground levels, structures, or landscaping do not reduce the effective height of the barrier.

Figure 031.1

Barrier Construction Detail

(a). For a Chain Link Fence:

The mesh size shall not exceed 1 1/4 inches square.

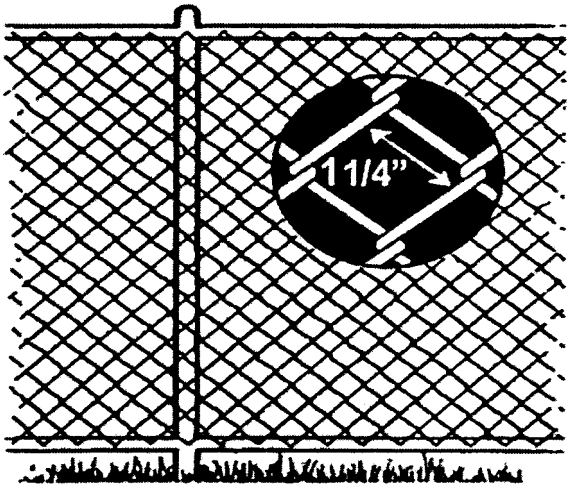

(b). When chain link exceeds 1 1/4 inches square, provide slats to reduce mesh openings to no more than 1 3/4 inches.

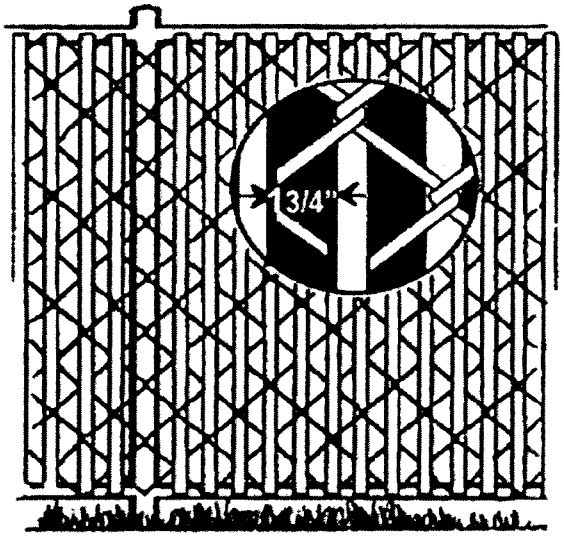

(c). Vertical Spacing: If tops of horizontal members are greater than 45 inches apart, vertical spacing shall not exceed 4 inches.

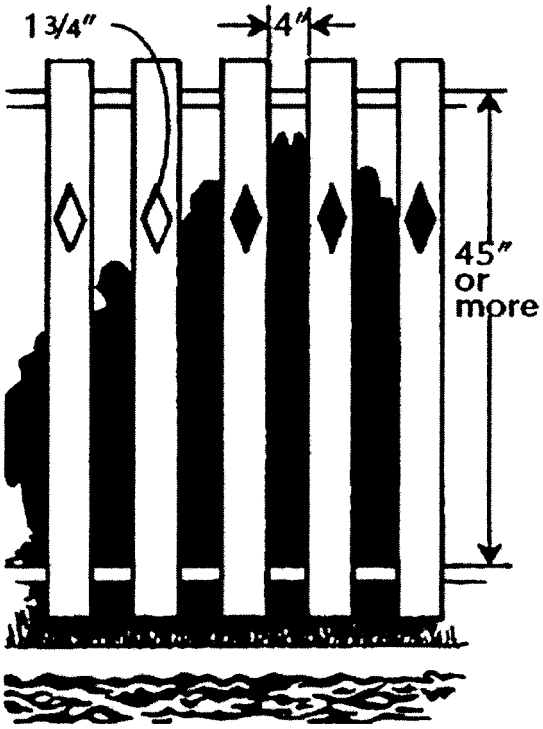

(d). Vertical Spacing: If tops of horizontal members are less than 45 inches apart, vertical spacing shall not exceed 1 3/4 inches.

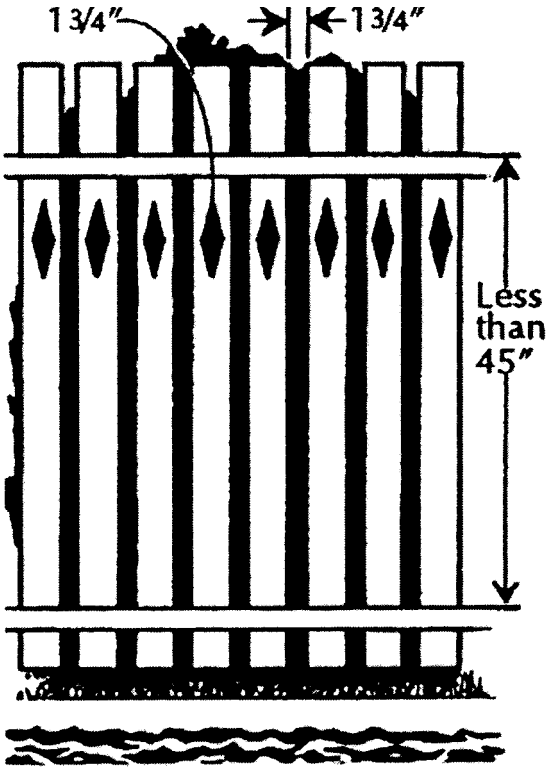

(e). Solid Barrier: No indentations or protrusions shall be present, other than normal construction tolerances and masonry joints.

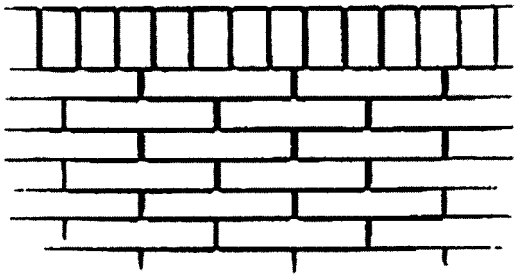

(f). Maximum Clearance shall not exceed 4 inches above grade.

Figure 031.2 Gate and Latch Detail: When latch height is less than 60 inches from the ground, a continuously locked lock must be provided with an 18 inch radius of protection around the latch.

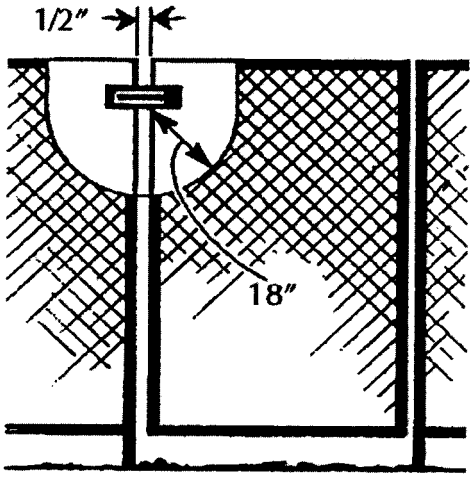

(5) **Barriers for existing facilities:** Before June 1, 2008, owners shall provide barriers for all pools conforming with subsection (4) of this section. Barrier modifications made prior to the compliance deadlines shall meet the requirements in subsection (4) of this section, at the time the modifications are made.

(6) **Pool surface:** Owners shall ensure pool surfaces are constructed and maintained to:

(a) Have white or light color finish;

(b) Not cause cutting, pinching, puncturing, entanglement, or abrasion hazard under casual contact; and

(c) Conform to ANSI/NSPI-1 2003 Standards for Public Swimming Pools or ANSI Standard NSPI-@-1999, American National Standard for Public Spas.

(7) **Inlets:** Owners shall provide pool inlets that are:

(a) Submerged;

(b) Located to produce uniform water and chemical circulation throughout the pool; and

(c) Located on the bottom of swimming and wading pools over twenty-five hundred square feet and spa pools greater than ten thousand gallons.

(8) **Outlets:**

(a) Owners shall provide pool outlets with:

(i) Overflow and main drain grating systems each designed to carry one hundred percent of the total recirculation filter flow;

(ii) Main drain piping systems designed to carry one hundred percent or more of total recirculation filter flow when a single pump is used or fifty percent or more of total recirculation filter flow when multiple pumps are used; and

(iii) Valving on main drain piping designed to provide required flow.

(b) Owners shall ensure that overflow outlets maintain a minimum of sixty percent of filter recirculation flow at all times.

(c) Overflow outlets must consist of an overflow channel on the perimeter of swimming pools twenty-five hundred square feet or more and spa pools ten thousand gallons or more, to promote uniform circulation and skimming action of the upper water layer with:

(i) A design preventing all matter entering the channel from returning to the pool;

(ii) Dimensions minimizing the hazard for bathers, such as catching arms or feet;

(iii) One one-hundredth of a foot slope per foot or more. However, adequate hydraulic justification from a designer to ensure the overflow system will meet (c)(v) of this subsection may be provided as an alternative;

(iv) Drains sufficiently spaced and sized to collect and remove overflow water to return line and filter, where applicable; and

(v) Size sufficient to carry one hundred percent of the recirculation flow plus the surge flow without flooding the overflow channel.

(d) Overflow outlets must consist of skimmers or overflow channels for pools less than twenty-five hundred square feet, or for spas under 10,000 gallons.

(i) Weirs provided in skimmers must have a normal operation flow rate of three to five gpm per inch of weir;

(ii) Skimmer equipment must be recessed in the pool wall so no part protrudes beyond the plane of the wall into the pool;

(iii) Skimmers must be equipped with a device, such as an equalizer line, to prevent air lock in the recirculation suction line. If equalizer lines are used, they must be protected with grates listed by IAPMO or UL;

(iv) Skimmers must be equipped with a removable and cleanable screen designed to trap large solids;

(v) Skimmers shall operate continuously with a minimum displacement rate of fifteen gallons per bather in swimming pools, twenty gallons in spa pools, and seven gallons in wading pools.

(e) Main drains in all pools must:

(i) Be located at swimming and wading pool low points;

(ii) Consist of two or more main drains for any pumped water recirculating system designed;

(A) Piping must be manifolded to assure the water pumps from both main drains simultaneously so that no single drain could be the sole source of suction;

(B) Drains must be spaced at least three feet apart or as far as practical in small spa pools. If a pool uses more than two main drains with a pump, the design must distribute flow so that no single drain could be the primary source of suction;

(C) Piping must be designed so velocity in piping assuming one hundred percent of the pump recirculation flow does not exceed six fps up to the main drain outlet box.

(iii) Have grates on drains with maximum flow of one and one-half feet per second or net outlet area four times or greater than the discharge pipe;

(iv) Have openings that prevent a sphere greater than one-half inch in diameter passing;

(v) Have mechanically fastened grates designed to withstand the force of users;

(vi) Have the total open area of grates sized to prevent a suction or entrapment hazard dangerous to user; and

(vii) For spa pools, have a design listed by IAPMO or UL to aid in preventing hair entrapment, if the main drains are located on vertical walls of the spas.

(9) **Pumps:** Owners shall provide and maintain recirculation pumps with adequate capacity to provide design flows for the entire operating and backwash cycles of the filter.

(10) **Strainers:** Owners shall provide hair and lint strainers for pumps that precede filters.

(11) **Pool appurtenances:**

(a) Owners shall ensure pools have:

(i) Handholds when the pool deck is greater than twelve inches above the water surface;

(ii) Stairs leading into spa pools;

(iii) Step risers on the exterior of the spa pool shall conform with UBC requirements for risers with nonslip tread finishes, when spas are elevated off the pool floor; and

(iv) Stairs, ladders, or stepholes for access at the shallow end of swimming pools.

(b) Owners shall ensure that stairs, when provided, meet the following construction requirements:

(i) Nonslip tread finish;

(ii) Contrasting color stair tread edges;

(iii) Placement recessed into the side of pools specifically designed for lap or competitive swimming;

(iv) Handrail having leading edges less than eighteen inches beyond and less than eight inches inside (horizontally) the vertical plane of the bottom riser;

(v) Each riser tread shall have a minimum unobstructed, tread depth of ten inches and minimum surface area each of two hundred forty inches;

(vi) Uniform riser heights of seven and one-half inches or less on general use swim pools fifteen hundred square feet or more and spa pools greater than forty feet in perimeter, except the bottom riser may be less than the uniform height; and

(vii) Uniform riser heights of ten inches or less for all other pools, except the bottom riser may be plus or minus two inches of the uniform height.

(c) Ladders or stepholes at swimming pools shall be:

(i) Spaced at a minimum of one for every seventy-five feet of swimming pool perimeter deeper than four feet;

(ii) Provided at both sides of the deep end of swim pools over thirty feet in width; and

(iii) Equipped with handrails.

(12) **Valves:** Owners shall provide valves to allow isolation and maintenance of equipment.

(13) **Balancing tanks:** Owners shall provide balancing tanks for pools designed with overflow channels. Balancing tanks must be of adequate size to prevent air lock in the pump suction line and have sufficient capacity to prevent flooding of the overflow channel.

(14) **Equipment and chemical storage rooms:** Owners shall provide enclosed, locked, lighted, vented rooms for mechanical equipment, with floors sloped to a floor drain and minimum access area three feet wide around equipment. Owners shall provide a separate chemical storage area or room that conforms to manufacturer's requirements for each chemical used in the pool area.

(15) **Make-up water:** Owners shall ensure an adequate supply of make-up water with associated piping, for each pool:

(a) Sufficient to replace daily pool losses;

(b) From a supply conforming to chapter 246-290 WAC;

(c) Without cross connections; and

(d) If using a pool fill spout, the spout may not project greater than one inch into the space above the water surface and shall be shielded so as not to create a deck hazard.

(16) **Filters:**

(a) Owners shall equip pools with filtration equipment:

(i) Meeting the applicable standards of NSF (for commercial application) or equivalent;

(ii) With a rate of flow indicator and gauge(s) for monitoring backpressure on filter;

(iii) With a means of discharging filter backwash to waste with a sight glass in a manner not creating a cross connection or a public nuisance;

(iv) With a means to release air entering the filter tank for pressure filters.

(b) If cartridge filters are used, owners shall always possess an extra set of cartridges and may not use cartridge filters with bypass valves.

(17) **Disinfection equipment:**

(a) Owners shall provide disinfection equipment:

(i) Providing a continuous and effective disinfectant residual;

(ii) Using a disinfectant with an easily monitored residual;

(iii) Having a design feed rate providing effective disinfection levels for peak demand conditions; and

(iv) Conforming to NSF standard 50 if disinfection chemical is other than gas chlorine.

(b) If disinfection equipment has adjustable output rate chemical feed of liquid solutions, the equipment shall:

(i) Feed under positive pressure in the recirculation system;

(ii) Provide a means for dosage adjustment; and

(iii) If the disinfection equipment is above pool water surface level, have provisions to prevent disinfectant solution siphoning when equipment is turned off.

(c) Solid tablets or granules may not be placed in skimmer basket.

(d) Rooms holding chlorine gas equipment must:

(i) Be above ground level;

(ii) Be constructed so all openings or partitions with adjoining rooms are sealed;

(iii) Be located with consideration of prevailing winds to dissipate leaked chlorine away from the pool facility;

(iv) Have door(s) opening only outward to the out-of-doors; and

(v) Have a sign on the door exterior reading **DANGER CHLORINE** in large enough letters to be read twenty-five feet away.

(e) Chlorine rooms must have mechanical exhausting ventilation that includes:

(i) Air inlets located as far as possible from fan intakes to promote good air circulation patterns;

(ii) A minimum of one air change per minute in the chlorine room when fan is operating;

(iii) A remote switch outside the room or a door-activated switch to turn on fan before entering;

(iv) Suction for fan near the floor;

(v) Exhaust vents located to prevent chlorine contaminated air from being drawn into supply air; and

(vi) Screened chlorinator vents.

(f) Gas chlorine systems must:

(i) Be vacuum injection type, with vacuum-actuated cylinder regulators;

(ii) Provide integral backflow and antisiphon protection at the injector;

(iii) Have taring (net weight of cylinder gas) scales for determining chlorine weight; and

(iv) Have a means for automatic shutoff when water flow is interrupted.

(g) A self-contained breathing apparatus designed for use in chlorine atmospheres caused by chlorine leaks must be available in an area accessible to the operator outside the chlorine room. The apparatus must be maintained in accordance with department of labor and industry standards. If procedures are established for immediate evacuation and the owner has a written agreement with emergency service fire districts or other approved organizations within the area for promptly responding to chlorine leaks, then breathing protection is not required at the pool facility.

(h) Chlorine gas cylinders must:

(i) Be stored only in designated chlorine rooms;

(ii) Have an approved valve-stem cylinder wrench on the valve stem to shut the system down in an emergency event;

(iii) Be properly secured to prevent tipping;

(iv) Be tagged to indicate cylinders are empty or full; and

(v) Not exceed one hundred fifty pounds tare weight per cylinder.

(i) Owners shall ensure that chemical disinfectants are not hand-fed into pools actively in use. *Exception*, chemical disinfectants may be hand-fed on an emergency basis if no users are in the pool and the pool is tested to meet water quality standards before reentry.

(j) If ozone is provided as a supplemental disinfection process:

(i) When ozone is produced by corona discharge method, the area where the ozone is produced shall meet the requirements of (e) of this subsection, unless field tests demonstrate no hazardous off-gassing of product;

(ii) When ozone is produced by ultraviolet light, it may be allowed in the mechanical room provided there are no levels of off-gassing exceeding 0.05 ppm;

(iii) Provide an ozone detector and alarm with corona discharge ozone generators;

(iv) Provide sufficient contact chambers to prevent excess levels of ozone from entering the pool water; and

(v) Testing equipment must be provided to monitor levels in the water and the atmosphere immediately above the water and the room where the ozone is produced.

(k) If copper or copper/silver is provided as a supplemental disinfection process:

(i) The output rate and method of controlling process levels into the pool facility must be provided;

(ii) The system shall not have a detrimental effect on maintaining proper turnover rates for the pool; and

(iii) Testing equipment provided to monitor levels of copper and silver in the pool water.

(18) **Chemical feeding equipment for pH control:** Owners shall provide chemical feed equipment for pH control, with a means of automatic shutoff if water flow is interrupted, for:

(a) Swimming pools fifty thousand gallons or greater;

(b) Spa pools ten thousand gallons or greater; and

(c) All pools treated with caustic soda or carbon dioxide.

(19) **Ventilation:** Owners shall provide adequate ventilation (in conformance with ASHRAE standards for pools and decks) to maintain air quality and to prevent moisture buildup in indoor areas. Design considerations must include maintaining negative pressure in the pool and deck area; providing adequate total airflow for acceptable air distribution; and preventing short-circuiting of fresh air return to exhaust.

(20) **Locker room and dressing rooms:**

(a) Owners shall provide general use pool facilities with locker rooms and dressing rooms having:

(i) Separate facilities for each gender constructed to block line of sight into locker rooms;

(ii) Water impervious nonslip floors properly sloped to drains to prevent standing water;

(iii) Easily cleanable walls, lockers, and benches (if provided);

(iv) Junctions between walls and floors coved for ease of cleaning; and

(v) Properly anchored lockers, (if provided), to prevent tipping.

(b) Owners shall provide limited use pool facilities with locker or dressing rooms meeting the requirements of (a) of this subsection if the pool facilities are located more than one-quarter mile from any served living units.

(c) Owners shall provide general use recirculating spray pool facilities with locker or dressing rooms meeting the requirements of (a) of this subsection if the pool facilities are located indoors.

(21) **Restrooms, shower rooms, and plumbing fixtures:**

(a) Owners shall provide general use pool facilities with restroom and shower room facilities having plumbing fixture types and numbers as described in Table 031.3 of this section (swim and wading pool bathing loads and spa bather capacity are additive for determining total bather load). The pool facil-

ity design shall provide users easy access to restroom and shower facilities with minimum nonuser cross traffic.

(b) Owners shall provide general use pool facilities with:

(i) Hose bibs with vacuum breakers around pool decks at a maximum spacing of one hundred fifty feet; accessible to each locker room; and within equipment room at facilities fifteen hundred square feet or more;

(ii) A janitor's sink at indoor facilities with a pool of fifteen hundred square feet or more; and

(iii) An operable drinking fountain conforming to ASA requirements at facilities with a pool fifteen hundred square feet or more.

(c) Owners shall provide limited use pool facilities with:

(i) Restroom and shower room facilities having plumbing fixture types and numbers as described in Table 031.3 of this section, if bathing load exceeds eighty persons;

(ii) Restroom and shower room facilities having plumbing fixture types and numbers as described in Table 031.4 of this section, if bathing load is eighty persons or less;

(iii) Hose bibs around pool decks at a maximum spacing of one hundred fifty feet;

(iv) A hose bib accessible to each locker room; and

(v) A hose bib within each equipment room at facilities with a pool of fifteen hundred square feet or more.

Table 031.3
Restroom Minimum Requirements* for General Use Pools
(Includes swimming, spa, and wading pools**)

Amount of Fixtures Required for Occupancy Load by Sex		
TYPE OF FIXTURES	MALE	FEMALE
Toilets up to 120	1/60	1/40
From 121-360	1/80	1/60
Over 360 add	1/150	1/100
Urinal up to 120	1/60	N/A
From 121-360	1/80	N/A
From 360 add	1/150	N/A
Showers up to 120	1/40	1/40
From 121-360	1/60	1/60
Over 360 add	1/100	1/100
Sinks up to 200	1/100	1/100
From 201-400	1/200	1/200
Over 400 add	1/400	1/400
Diaper changing station	1	1

* If sufficient supporting documentation is provided, restroom fixture numbers may be adjusted between the genders based on proposed use of the facility. (E.g., if the designer has experience and justification based on similar type facilities indicating that providing one additional shower for the women and one less for men would provide a sufficient number of fixtures to meet demands, this may be allowed.)

** If a general use spa or wading pool is the only pool at the facility, then a minimum of only one toilet, shower, and sink is required for each gender.

Table 031.4
Restroom Minimum Requirements for Limited Use Pools
(Includes swimming, spa, and wading pools.)

POOLS WITH:	TOILETS	SHOWERS	SINKS	DRESSING ROOMS	DIAPER CHANGING STATION
Living units*within 100 feet and less than three stories	-	-	-	-	-
Living units > 100 feet but < 500 feet and less than 3 stories	1	1**	1	-	1
Living units within 1/4 mile and/or with three or more stories	1	1	1	-	1
Living units greater than 1/4 mile	1(M) 1(F)	1(M) 1(F)	1(M) 1(F)	1(M) 1(F)	1(M) 1(F)

* "Living units" means all the units the facility serves.

** A shower is required only if a spa is present.

(d) Owners shall provide general use recirculating spray pool facilities with:

(i) Separate restroom facilities for each sex containing at least one toilet and handwashing sink;

(ii) Hose bibs around pool decks at a maximum spacing of one hundred fifty feet; and

(iii) Additional plumbing fixtures, if indoors, conforming to the requirements for general use pools described in Table 031.3 of this section.

(e) Owners shall provide limited use recirculating spray pool facilities with:

(i) Hose bibs around pool decks at a maximum spacing of one hundred fifty feet; and

(ii) A restroom facility containing at least one toilet and one handwashing sink, if living units served are farther than one hundred feet away from the main pool.

(f) Restroom facilities must be located convenient to, and no further than one hundred feet away from, the main pool. They must have flush toilets provided with toilet tissue in dispensers and handwashing sinks including:

(i) Hot and cold or tempered water delivered through a mixing faucet with a maximum temperature of one hundred twenty degrees Fahrenheit;

(ii) Single service soap in a nonglass dispenser;

(iii) Single service towels or electric hand dryer; and

(iv) A minimum running water cycle of at least ten seconds if the faucets have self-closing valves.

(g) Shower facilities must be located convenient to, and no more than one hundred feet away from, the main pool. The facilities must have:

(i) A design allowing a full-body shower in the nude;

(ii) A design providing an enclosure confining water to the shower area;

(iii) Nonslip floor impervious to water with sufficient drains to prevent water from standing within the shower areas;

(iv) Running water delivered at a temperature between ninety degrees and one hundred twenty degrees Fahrenheit;

(v) Single service soap in a nonglass dispenser; and

(vi) Wall surfaces impervious to water up to shower head height.

(h) If owners limit the number of bathers within their facility and post and enforce the maximum bather load, owners may base the number of required plumbing fixtures on the posted maximum bather load.

(i) Owners shall dispose of all wastewater in a manner approved by the local health officer.

(22) **Diaper changing stations:** Owners shall provide a diaper changing station, including a handwashing sink conforming to the requirements in subsection (21)(f) of this section, accessible to all bathers, if children in diapers are allowed in the pool facility and the facility is:

(a) A general use pool facility; or

(b) A limited use pool facility located more than one hundred feet away from living units served.

(23) **Lighting:** Owners shall design and maintain pool facility lighting to a minimum level as described in Table 031.5. Sufficient overhead and underwater lighting shall be maintained to clearly see the bottom of the pool at all times pool is in use. Owners shall provide protective shielding for all lighting fixtures above walking surfaces and pool areas.

Table 031.5*

Minimum Lighting Level Required at Water Recreation Facilities.

Location	Minimum Lighting Level
Indoor pool surface	30 foot candles
Outdoor pool surface*	10 foot candles
Pool Decks	10 foot candles
Locker rooms and mechanical rooms	20 foot candles

* Outdoor pool facilities, which are used in daylight hours only (before dusk) are not required to meet this standard.

(24) **Flow-through pools:** Flow-through pools may qualify for exceptions to recirculation if:

(a) Water supply is sufficient to provide the same turnover period specified for recirculation pools;

(b) The source water supply meets acceptable quality requirements and is subject to a disinfection method as described under WAC 246-260-111(3);

(c) The introduction of fresh treated pool water is accomplished by the same type of inlet and outlet design required for recirculation pools; and

(d) The pool water quality complies with WAC 246-260-111.

[Statutory Authority: RCW 70.90.120. 05-09-004, § 246-260-031, filed 4/7/05, effective 5/8/05. Statutory Authority: Chapters 70.90 and 43.20 RCW. 04-18-096, § 246-260-031, filed 9/1/04, effective 10/31/04.]

WAC 246-260-041 Swimming pool design, construction, and equipment. For more general design, and construction requirements that pertain to all pools, see WAC 246-260-031.

(1) **Location.** Owners shall ensure pump houses, planters, balconies, landscape features, trees, and structures are located fifteen feet or more horizontally away from any swimming pool, or provide barriers or other means to prevent diving or ready access to a pool from the structures. These structures do not include:

(a) Building walkways above the second story;

(b) Inaccessible roofs eight feet or more in height; or

(c) Any barriers provided to prevent unauthorized pool access (e.g., fencing).

(2) **Walking deck surfaces.** Owners shall design and maintain walking deck surfaces as follows:

(a) For pools less than fifteen hundred square feet, walking deck surfaces must be at least four feet wide around the entire perimeter of pools;

(b) For pools less than fifteen hundred square feet, walking deck surfaces must be at least:

(i) Six feet wide at the shallow end of a variable-depth pool; and

(ii) Six feet wide on a minimum of twenty-five percent of the deck space of free form pools.

(c) For pools fifteen hundred square feet or larger, walking deck surfaces must be at least six feet wide:

(i) Around the entire perimeter of outdoor pools;

(ii) On fifty percent of the perimeter of indoor pools; and

(iii) The remaining fifty percent perimeter of the indoor pool must be a minimum of four feet wide.

(d) For pools fifteen hundred square feet or more, walking deck surfaces must be at least sixteen square feet per bather. To determine maximum bather load see subsection (10) of this section. If the owner provides maximum facility occupancy loading less than that of subsection (10) of this section, and the occupancy limit is posted and enforced, that loading may be used in lieu of the maximum bather load figure as described under subsection (10) of this section; and

(e) General use pools may not have sand and grass areas within the pool enclosure unless these areas are separated to prevent direct access from the pool area and the facility provides a means for cleansing bather's feet before reentering the pool and deck area.

(3) **Pool general floor and wall dimensional design.**

(a) Owners shall ensure pool dimensional designs for floors and walls provide for safety, circulation and quality of water;

(b) Pool floors must have uniform slopes with:

(i) A maximum slope of a one-foot drop in twelve feet of run at pool depths to five or less in pools fifteen hundred square feet or more; and

(ii) Floor slopes not intruding into the area designated as the diving envelope.

(c) Pool sidewalls may not curve or intrude into the pool beyond the vertical more than twelve inches at three and one-half feet and eighteen inches at a depth of five feet. The radius of curvature of wall-floor junctions may not exceed the maximum radius designated in Table 041.1 of this section for depths over five feet. Vertical means walls not greater than eleven degrees from plumb:

Table 041.1
Maximum Radius Coving or Pool Intrusion Dimensions Between Pool Floor and Wall*

POOL DEPTH	3'	3'6"	5'	Greater than 5'
MINIMUM SIDEWALL DEPTH (Springline)	2'2"	2'6"	3'6"	At 3'6"
MAXIMUM RADIUS OF CURVATURE	10"	12"	1'6"	**Maximum radius equals pool depth minus the vertical wall depth

*Note: For pool depths falling between the depths listed, values can be interpolated.
For pool depths less than three feet and greater than five feet, values shall be extrapolated.
Radius of coving shall not intrude into pool within diving envelope.

(d) Pool configuration must have a transitional radius from wall to floor where floor slopes join walls so that:

(i) The center of the radius not less than the minimum vertical depth specified under Table 041.1 of this section below the water surface level;

(ii) The arc of the radius is tangent to the wall; and

(iii) The maximum radius of coving, or any intrusion into the pool wall/floor interface, is determined by subtracting the vertical wall depth from the total pool depth.

(4) **Ledges.** In new construction or alterations to existing construction, ledges are prohibited in swimming pool sidewalls, except as specified in WAC 246-260-091(3).

(5) **Specific design requirements for pools furnishing areas for diving.** Owners shall ensure areas designated for diving activities include a diving envelope meeting minimum requirements in:

(a) D-8.01, Table 1, APHA Public Pool Regulations, 1981, if the pool user would enter from the deck level twelve inches or less from water surface level.

(b) CNCA standard configuration in areas where user would enter from the deck level over twelve inches from water level, or has a platform or diving board provided at a height of less than one-half meter (twenty inches). This requirement is based on a standard described under CNCA publication *Swimming Pools: A Guide to Their Planning, Design, and Operation* 1987, Fourth Edition. Human Kinetics Publisher, Inc., Champaign, Illinois, Figure 8.1; or

(c) Dimensions for Diving Facilities, FINA facility rules, 2000-2001, if the pool user enters from the diving board or platform at a height of twenty inches (one-half meter) or greater from water surface level.

(6) **Pool appurtenances.**

(a) If a swimming pool contains diving boards and/or diving platforms, owners shall ensure that the boards and platforms:

(i) Are installed according to manufacturer's instructions;

(ii) Have slip-resistant tread surfaces;

(iii) Have steps and ladders leading to diving boards with handrails; and

(iv) Are protected with guardrails and one intermediate rail, both extending at least to the water edge when one meter or more above the water.

(b) Owners shall ensure starting blocks:

(i) Are firmly secured when in use; and

(ii) If water depth is less than nine feet, starting blocks must be removed or covered with protective equipment unless used by competitive swimmers trained in proper use of starting blocks.

(c) Owners shall ensure that water slides conform with requirements of chapter 246-262 WAC.

(7) **Turnover.** Owners of swimming pools shall design and maintain water treatment recirculation rates to completely turn over the entire pool water volume of pool in six hours or less.

(8) **Pool depth markings.** Owners shall provide water depth markings in feet:

(a) Located on the pool vertical wall at or above the water level so as to be easily readable from the water, in numbers at least two inches high. If overflow channels do not allow for placement of vertical wall markings above the water level, they are not required;

(b) Located on the horizontal surface of pool coping or deck of pools within eighteen inches of the water's edge, easily readable while standing on the deck facing the water, in numbers at least four inches high;

(c) Placed at the maximum and minimum water depths and at all points of slope change;

(d) Spaced at increments of water depth of two feet or less;

(e) Spaced along sides of pools at horizontal intervals of twenty-five feet or less;

(f) Arranged uniformly on both sides and ends of pool;

(g) Placed on all major deviations in shape;

(h) Applied in a contrasting color; and

(i) Made of slip-resistant material on decks.

(9) **Safety line or marking line.**

(a) Owners shall provide either safety float lines or marking lines separating areas where the pool bottom breaks from a uniform slope in the shallow area leading to deeper water. Neither float lines or marking lines are required in pools with uniform floor slopes not exceeding one foot of slope for every twelve feet of horizontal floor length.

(b) Safety float lines, when used, must:

(i) Be kept in place at all times, except when the pool is used for a specific purpose such as lap swimming or competitive use;

(ii) Be placed one foot toward the shallow end away from the break point line;

(iii) Be strung tightly allowing bathers to hold onto the line for support;

(iv) Provide floats on the line at a minimum distance of every four feet; and

(v) Have a receptacle for receiving the safety line either recessed into the wall or constructed so as not to constitute a safety hazard when the safety line is removed.

(c) Marking lines, when used, must:

(i) Be placed on pool sides and bottoms at the break point line; and

(ii) Be of a contrasting color to the background color of the pool sidewalls and floor.

(d) In pools with uniform slopes not exceeding one foot of drop in twelve feet of run from the shallow end to the deep end, a safety float line or marking line is not required.

(10) **Bather load.** Owners shall ensure maximum number of bathers in the pool facility at any one time do not exceed a number determined by the formula noted under Table 041.2.

Table 041.2
Swimming Pool Maximum Bathing Load*

Type of pool	Value **A** (**SF Shallow (5 ft. or less))	Value **B** (SF Deep (> 5 ft.))	Maximum bather load Value **A** + **B**
Indoor	SF/25	SF/30	
Outdoor	SF/15	SF/30	

* This formula will be used in determining certain features of pools as noted elsewhere in these rules and regulations.
** SF means square feet of surface area.

(11) **Emergency equipment.** Owners shall provide first aid and have emergency equipment readily available at swimming pool facilities during operating hours, including:

(a) A telephone within the facility for general use pools;

(b) A telephone accessible within one minute for limited use pool facilities;

(c) A suitable area to accommodate persons requiring first-aid treatment;

(d) A standard 16-unit first-aid kit (see Appendix C, Table); and

(e) A blanket reserved for emergency use.

(f) For facilities with lifeguards:

(i) A rescue tube or rescue buoy at each pool lifeguard station; and

(ii) A backboard with means to secure a victim to a board and immobilize head, neck, and back.

(g) For pool facilities without lifeguards:

(i) A reaching pole at least twelve feet long with a double crook life hook;

(ii) A reaching pole at least twelve feet long for every fifteen hundred square feet of pool surface area; and

(iii) A throwing buoy, throw-rope bag, or other similar device with a rope the width of the pool or fifty feet long, whichever is less, for reaching and retrieving a victim.

(h) No later than June 1, 2008, owners of existing pools with single main drains shall install emergency equipment to shut off all pumps hooked to the recirculation lines for the pools. This emergency equipment must be placed within twenty feet of the pool and marked with an emergency shutoff sign. The shutoff switch must include an audible alarm which can be heard by those in the area, or have an alarm that goes to a point where staff is always present during the periods the pool is open.

(i) Pools providing dual main drains meeting the requirements of this section, or other acceptable methods of providing equivalent protection to the emergency shutoff switch, are exempt from this requirement.

(ii) The owner shall check the shutoff switch at least twice annually to determine it is properly operating.

(iii) The department will develop a guidance document to aid owners and designers in potential options to the emergency shutoff switch and audible alarm.

(12) **Foot baths.** Foot baths at water recreation facilities are prohibited. This does not preclude the construction and use of foot showers, if the area is well drained.

[Statutory Authority: RCW 70.90.120. 05-09-004, § 246-260-041, filed 4/7/05, effective 5/8/05. Statutory Authority: Chapters 70.90 and 43.20 RCW. 04-18-096, § 246-260-041, filed 9/1/04, effective 10/31/04.]

WAC 246-260-051 Spa pool design, construction, and equipment. For more general design, and construction requirements that pertain to all pools see WAC 246-260-031.

(1) **Walking surfaces.** Owners shall design and maintain walking surfaces four feet or more wide around fifty percent or more of each spa pool. If spa pools are greater than one hundred square feet in surface area, then the entire perimeter must have a four-foot wide walking surface. If a spa has walking surfaces thirty inches or more in height above the floor, then they must have guardrails that conform with UBC codes.

(2) **Spa pool structure.** Owners shall ensure spa pool facilities have:

(a) White or light color surfaces, if a pool is one hundred square feet or more;

(b) Uniform floor slopes not exceeding one foot of drop in twelve feet of run sloped to drain;

(c) A minimum height of seven feet between the top of the pool rim and the ceiling;

(d) A maximum operational depth of four feet measured from the water line, except for special purpose designed pools; and

(e) Heater thermostat switches inaccessible to bathers.

(3) **Spa capacity.** The spa capacity is the maximum number of persons allowed in the spa pool at any one time and is the most restrictive of the following:

(a) The number of bathers able to be in the spa pool allowing ten square feet or more of water surface for each bather;

(b) Maximum bather load as calculated using the formula in subsection (4) of this section; or

(c) The capacity of the overflow system when using skimmers must be adequate to handle twenty gallons of displacement per bather.

(4) **Turnover rate and bather load.** Owners shall design and maintain water turnover of spa pool volume divided by turnover time divided by a constant (K). Spa turnover times are established in relation to loads as follows:

(a) Ten minutes for heavily loaded;

(b) Twenty minutes for moderately loaded;

(c) Thirty minutes for lightly loaded; and

(d) Sixty minutes for swim spas having very light loads.

Factors for Determination of Spa Loading

Spa Volume	Turnover Time (options are 10, 20, 30, or *60 minutes)	Constant K_{10} (10 minute turnover time) 8 gpm/person	Constant K_{20+} (20, 30, or *60 minute turnover time) 6.67 gpm/person
Value A	Value B	Value K_{10}	K_{20+}

* 60 minute turnover times are established for swim spa facilities.

$$\frac{\text{(Value A)}}{\text{(Value B)}} \div \text{(Constant K*)} = \text{Maximum spa capacity}$$

* Choose K based on turnover of the spa.

(5) **Emergency equipment.** Owners shall provide easily accessible first-aid and emergency equipment at all spa pool facilities during operating hours, including:

(a) A telephone within the facility for general use spa;

(b) A telephone within one-minute access for limited use spa pools;

(c) A standard sixteen-unit first-aid kit;

(d) A blanket reserved for emergency use; and

(e) A clearly marked emergency shutoff switch for turning off all pumps. The switch must be within twenty feet of each spa, accessible to the public, and triggering an audible alarm.

[Statutory Authority: Chapters 70.90 and 43.20 RCW. 04-18-096, § 246-260-051, filed 9/1/04, effective 10/31/04.]

WAC 246-260-061 Special design and construction provisions for hotels and motels (transient accommodations) serving fewer than fifteen living units and for spas in individual hotel/motel rooms. (1) Owners are exempt from the requirements for design, construction, and equipment in WAC 246-260-031 and 246-260-051 for spa pools at limited use facilities serving less than fifteen living units, except for requirements listed in this section. Owners shall also ensure that chemicals are stored in a manner to minimize safety risks.

(2) The requirements in WAC 246-260-031 (1), (2), (3), (4), (5), (6), (8)(b), (d)(iii), (d)(v), (e), (9), (10), (15), (16), (17), and Table 031.4 apply to prefabricated spa pools at limited use facilities serving less than fifteen living units.

(3) The requirements in WAC 246-260-051 (2)(b), (d), (e), (4), (5)(b), (c), and (e) apply to prefabricated spa pools at limited use facilities serving less than fifteen living units.

(4) Spa pools that are drained, cleaned and refilled between patron use in individual hotel/motel rooms are exempt from these requirements. Spas that are not drained, cleaned and refilled between use shall at least:

(a) Conform with WAC 246-260-031(4) on barriers beyond the room itself, such that the guest room plus any associated lanai or deck may be considered an enclosure unit.

(b) Conform with WAC 246-260-031(17) on disinfection equipment and conform with water quality requirements of WAC 246-260-111 for disinfection and pH.

[Statutory Authority: RCW 70.90.120. 05-09-004, § 246-260-061, filed 4/7/05, effective 5/8/05. Statutory Authority: Chapters 70.90 and 43.20 RCW. 04-18-096, § 246-260-061, filed 9/1/04, effective 10/31/04.]

WAC 246-260-071 Wading pool design, construction, and equipment. For more general design and construction requirements that pertain to all pools, see WAC 246-260-031.

(1) **Walking surfaces.** Owners shall design and maintain pool walking surfaces:

(a) Four feet or more wide; and

(b) With a surface area of sixteen square feet per bather at the facility with both a swimming pool and wading pool when swimming pool is fifteen hundred square feet or more.

(2) **Wading pool floor and wall dimensional design.** Owners shall ensure pool dimensional designs for floors and walls provide for bather safety and do not hinder water circulation and quality. Designs must include:

(a) Coved at the intersection of walls with floors; and

(b) Uniform pool floor slopes not exceeding one foot of drop in twelve feet of run.

(3) **Wading pool entry and exit.** Owners shall provide one or more means of entry and exit on all pools including one of the following:

(a) Stairs including:

(i) Nonslip tread finish;

(ii) Contrasting color stair tread edges;

(iii) Handrails having leading edges less than eighteen inches beyond and less than eight inches inside (horizontally) the vertical plane of the bottom riser;

(iv) Riser treads with a minimum unobstructed, horizontal, ten-inch tread depth and minimum two hundred forty square inches of surface area; or

(v) Riser height uniform and seven and one-half inches or less, except last step leading into pool may be less than uniform height;

(b) Shallow pool entry must be seven and one-half inches or less in depth;

(c) Ramp entry into the pool must meet the following construction requirements:

(i) A handrail extending over the deck edge and extending to the bottom of the ramp for entering and leaving the wading pool;

(ii) Ramp edges protruding into the pool of contrasting color; and

(iii) Ramp slope not to exceed one foot in twelve feet.

(4) **Turnover.** Owners shall ensure wading pools turn over the entire pool water volume in three hours or less. If wading pools are recirculated jointly with swimming pools, proper means to ensure efficient turnover and treatment of the wading pool must be maintained.

(5) **Pool depth markings.** Owners shall provide easily visible depth markings:

(a) Measured in feet or inches;

(b) Located on the coping or deck within eighteen inches of the water's edge and positioned to be readable while standing on the deck facing the water;

(c) Made of slip resistant material;

(d) Placed at the maximum and minimum water depths;

(e) Spaced at intervals not exceeding twenty-five feet;

(f) Uniformly arranged on both sides and ends of the pool; and

(g) In numbers a minimum of four inches high.

(6) **Bather load.** Owners shall provide each bather in a wading pool facility with seven square feet or more of water surface area at all times.

(7) **Emergency equipment.** No later than June 1, 2008, owners of existing pools with single main drains shall install emergency equipment to shut off all pumps hooked to the recirculation lines for the pools. This emergency equipment must be placed within twenty feet of the pool and marked with an emergency shutoff sign. The shutoff switch must include an audible alarm which can be heard by those in the area, or the switch must have an alarm that goes to a point where staff is always present during the periods the pool is open.

(a) Pools with dual main drains meeting the requirements of this section, or other acceptable methods of providing equivalent protection to the emergency shutoff switch, are exempt from this requirement.

(b) The owner shall check the shutoff switch at least twice annually to determine it is properly operating.

(c) The department will develop a guidance document to aid owners and designers in potential options to the emergency shutoff switch and audible alarm.

[Statutory Authority: Chapters 70.90 and 43.20 RCW. 04-18-096, § 246-260-071, filed 9/1/04, effective 10/31/04.]

WAC 246-260-081 Spray pool design, construction, and equipment. For more general design and construction requirements that pertain to all pools, see WAC 246-260-031.

(1) **Walking surface.** A minimum four-foot wide walking surface shall extend around the perimeter of a spray feature sufficient that the spray will not exceed the walkway area in normal conditions including light wind conditions.

(2) **Pool structure.** Owners shall ensure each spray pool has:

(a) Pool surfaces with nonslip finishes impervious to water;

(b) Uniform pool floor slopes not exceeding one foot of a slope for every twelve feet of horizontal floor length;

(c) A source of water for the spray feature from an approved potable water supply;

(d) Water drained to waste disposed in a manner approved by local authorities or the department after use in the spray pool, unless it is recirculated with approved treatment as described in WAC 246-260-031; and

(e) The entire volume of water circulated through an approved treatment system every thirty minutes or less if water is recirculated.

(3) **Inlets and outlets.** Owners shall ensure spray nozzles at each spray pool are designed and maintained to not inflict physical damage to bathers. Design and construction shall include evaluation of forces of the spray nozzle including velocity, pressure and total force in proximity to bathers' eyes and other body orifices.

(a) Owners shall ensure outlet drains and recirculation drains are designed and maintained to provide sufficient capacity to prohibit water accumulation in each spray pool.

(b) Outlet drains in each spray pool must:

(i) Be located at the low point of the pool;

(ii) Have two or more main drains;

(iii) Have openings that prevent the passage of a sphere over one-half inch in diameter;

(iv) Have drain grates that withstand forces of users; and

(v) Have drain grates removable only with specific tools.

(c) Outlet drains to each spray pool recirculating pump, must have:

(i) A total open grate area sized to prevent a suction hazard dangerous to users;

(ii) A maximum flow of one and one-half feet per second, or net grate area of outlet four times or more the discharge pipe area; and

(iii) Manifolding a minimum of three feet apart where drains are piped directly to a pump.

(4) **Emergency equipment.** No later than June 1, 2008, owners of existing pools with single main drains shall install emergency equipment to shut off all pumps hooked to the recirculation lines for the pools. This emergency equipment must be placed within twenty feet of the pool and marked with an emergency shutoff sign. The shutoff switch must include an audible alarm which can be heard by those in the area, or the switch must have an alarm that goes to a point where staff is always present during the periods the pool is open.

(a) Pools that include dual main drains meeting the requirements of this section, or other acceptable methods of providing equivalent protection to the emergency shutoff switch, are exempt from this requirement.

(b) The owner shall check the shutoff switch at least twice annually to determine it is properly operating.

(c) The department will develop a guidance document to aid owners and designers in potential options to the emergency shutoff switch and audible alarm.

[Statutory Authority: Chapters 70.90 and 43.20 RCW. 04-18-096, § 246-260-081, filed 9/1/04, effective 10/31/04.]

WAC 246-260-091 Specialty design features. (1) Owners providing special features shall ensure the features meet the requirements of this section.

(2) **Benches.** A single bench or seat that is recessed from the general wall of the swimming pool may be built into the shallow area of the pool, if it meets the following conditions. The bench: (See figure 091.1.)

(a) May not be located in an area that is used for lap swimming;

(b) May not exceed twenty percent of the length of the side it is located on or five percent of the perimeter of a free form pool;

(c) Must have a minimum two-inch or wider durable continuous line of a contrasting color on the top and side of the bench edge, so as to be readily visible to persons standing on the deck and persons swimming in the water; and

(d) The area of the deck above the bench must be labeled in nonslip lettering at least four inches high: "NO DIVING."

figure 091.1

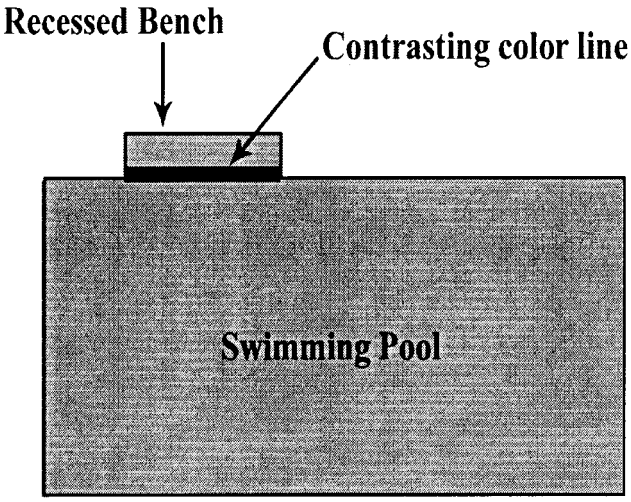

(3) **Ledges.** In general use swimming pools, a single ledge may be built into the deep end of the pool, if:

(a) The ledge construction conforms with FINA facilities rules, 2001-2002, Swimming Pools, FR2.4.2;

(b) The ledge is in a contrasting color from the rest of the pool for easy visibility.

(4) **Waterfalls.** A waterfall feature may be built at swim pool or spa pool facilities if the following conditions are met:

(a) If located in or adjacent to shallow swimming pool water levels, it must be set back from the edge of the pool a distance specified in Table 091.2; exceptions may be made for lifeguarded pools;

(b) If located at, or adjacent to, deep swimming pool water levels, it will be considered a diving platform and the adjacent pool area must conform to diving envelope design specified in WAC 246-260-041(5);

(c) Minimum walkway areas required in other sections of this chapter must be maintained around pools;

(d) Water in waterfalls that commingles with pool water must meet water quality and treatment requirements specified in other sections of this chapter and any additional disinfection required by the department or local health officer to address anticipated increased demands and aerosolization of disinfectant;

(e) Flows may not create turbulence that might create a safety hazard or reduce visibility in the pool; and

(f) Waterfalls that flow from pool sidewalls may not exceed five percent of the total pool perimeter.

Table 091.2
Set-Back Requirements for Special Water Features in Pools at Shallow Swimming Pool Water Levels*

Height of Feature Above Pool Water Level	Type of Special Feature		
	Waterfall	Rockery	Planting
12 inches or less	Feature may spill directly to pool from sidewall	Setback of 4 feet or more from pool edge; except at pools that are continuously lifeguarded. Five percent of deck perimeter may have feature provided up to pool edge.	Setback of 4 feet or more from pool edge.
Greater than 12 inches and less than 30 inches	Setback of 8 feet or more from pool edge.		
Greater than or equal to 30 inches	Setback of 15 feet or more from pool edge.		

* Guarded pool setbacks shall be established in a preconstruction design conference with the owner, designer and health department.

(5) **Rockeries.** A decorative rock feature may be built at a swim pool or spa pool facility, if the following conditions are met:

(a) If located adjacent to shallow swimming pool water, it must be set back from the edge of the pool a distance specified in Table 091.2; exceptions may be made for lifeguarded pools;

(b) If located at or adjacent to deep swimming pool water levels, it will be considered a diving platform and the adjacent pool area must conform to diving envelope design specified in WAC 246-260-041(5);

(c) The design has a nonslip surface without sharp or cutting edges in any areas that provide a potential foothold, stepping or standing access; and

(d) It slopes to drain water away from the pool.

(6) **Play toy equipment.** Play toy equipment may be built at pool facilities provided the following conditions are met:

(a) Can only be used in lifeguarded pools;

(b) It must comply with the requirements of chapter 246-262 WAC;

(c) Its design conforms to ASTM standard F1292 including establishing fall zones;

(d) Surfaces must be easily cleanable;

(e) It must be operated in accordance with a written plan of operation developed by the owner, addressing placement of the toy, protection from falls, entrapment, entanglement of bathers from each other, and visibility of users to lifeguards; and

(7) **Special use pools.** At least thirty days prior to development of final plans and specifications, owners shall submit proposals at a preliminary design conference for pools designed for special use purposes (e.g., scuba training, kayaking, portable rental spas, sensory deprivation tanks, public promotions at sports fields, county fairs, and any special events using portable pools) to the department or local health officer for review and approval. The department or local health officer has flexibility in applying portions of this chapter or additional requirements necessary to assure health and safety for users of these special use pools.

(8) **Ballet rails.**

(a) Owners may install ballet-type rails on pools having uses limited to exercise and training;

(b) Owners may install ballet-type rail on general or limited use pools, if:

(i) The rail is inset into the wall to preclude any obstructions in the pool; and

(ii) The rail is removable and covers are provided and used to maintain a flush surface in general use pools.

[Statutory Authority: RCW 70.90.120. 05-09-004, § 246-260-091, filed 4/7/05, effective 5/8/05. Statutory Authority: Chapters 70.90 and 43.20 RCW. 04-18-096, § 246-260-091, filed 9/1/04, effective 10/31/04.]

POOL OPERATION REQUIREMENTS

WAC 246-260-101 Operating permit. (1) A person may not operate a WRF without a current operating permit, issued by the department or local health officer.

(2) To obtain an operating permit, owners of a WRF shall provide the department or local health officer information showing the WRF is in compliance with this chapter.

(3) Operating permits are:

(a) Valid for one year;

(b) Subject to annual renewal; and

(c) Nontransferable without written department or local health officer consent. For purposes of this section, a change in management of a corporation, partnership, association, or other nonindividual business entity creates a new person requiring either consent for a permit transfer or issuance of a new permit upon proper application.

(4) The department or local health officer issuing the operating permit may revoke or suspend the permit if the WRF is not operating in accordance with chapter 70.90 RCW or chapter 246-260 WAC.

[Statutory Authority: Chapters 70.90 and 43.20 RCW. 04-18-096, § 246-260-101, filed 9/1/04, effective 10/31/04.]

WAC 246-260-111 Water quality standards, analysis, and sample collection. (1) **Contamination.** Owners shall maintain water free from harmful levels of disease producing organisms, toxic chemicals, or adverse physical conditions.

(2) **Bacteriological standards.** Owners shall maintain WRF pool waters to meet the following standards of bacteriological quality:

(a) Heterotrophic plate counts may not exceed two hundred bacteria per milliliter in two consecutive tests;

(b) Total coliform may not exceed an average of one coliform per sample of one hundred milliliters in two consecutive tests when using the membrane filter test; and

(c) Total coliform may not exceed 2.2 bacteria per sample of one hundred milliliters of water in two consecutive samples when using the most probable number (MPN) method.

(3) **Disinfection.**

(a) Owners shall maintain continuous disinfection of WRF pool water at all times by using:

(i) Chlorine or bromine concentrations specified in Table 111.1 of Appendix A;

(ii) Ozone may be used as a supplement to primary disinfection, but not a replacement.

(A) Minimum levels of primary disinfectant (chlorine or bromine) may not be less than required minimums.

(B) Ozonator units must meet the requirements of NSF standard 50 and be listed by NSF or an equivalent laboratory testing to NSF standard 50 and providing readily available listing.

(C) Maximum levels of ozone that can be produced by ozone generating device in the atmosphere above the pool water or the room where ozone is generated may not exceed 0.05 ppm.

(iii) Copper or copper silver disinfection processes may be used as a supplement to primary disinfection, but not a replacement.

(A) Minimum levels of primary disinfectant (chlorine or bromine) may not be less than required minimums.

(B) Copper or copper/silver disinfection units must meet requirements of NSF standard 50 and be listed by NSF or an equivalent laboratory testing to NSF standard 50 and providing readily available listing.

(C) Maximum levels of copper that can be produced in the pool water are 1.0 ppm copper and 0.05 ppm of silver; or

(iv) An alternative disinfectant registered with EPA and WSDA.

(b) Any primary or supplemental alternative disinfectant shall be used in conformance with guidelines established by the department and NSF standard 50.

(c) Alternative disinfectants must be evaluated using EPA document "*Guide Standard and Protocol for Testing Microbiological Water Purifiers*" by Campt and Cotruvo, EPA, April, 1986.

(4) **Chemical and physical quality.**

(a) Owners shall maintain physical and chemical conditions in WRF pool water within the ranges specified under Table 111.2 of Appendix A;

(b) Owners shall maintain cleanliness of WRF pool water by:

(i) Closing an affected WRF pool when contaminated with feces, blood, vomit, sewage, or other hazardous or unknown material until the area is clean, disinfected, and free of the hazardous material;

(ii) Daily removal of scum or floating material on the pool water surface;

(iii) Continuous removal of scum or floating material by overflow action of pool water with flotsam screened and filtered; and

(iv) Maintaining sanitary walking surfaces.

(5) **Laboratory sampling and testing.** Water samples for laboratory analyses required by this chapter must be:

(a) Analyzed in accordance with the twentieth edition of standard methods for the examination of water and waste/water analysis, published jointly by the American Public Health Association/Water Pollution Control Federation and AWWA;

(b) Collected in bottles approved by the local health officer;

(c) Collected and transported by procedures specified in standard methods listed in (a) of this subsection; and

(d) Analyzed at a laboratory approved by the local health officer.

(6) **Field testing.** Owners shall have and use field-testing equipment:

(a) To measure disinfectant residuals, pH, alkalinity, cyanuric acid (when used in pool) and any other chemicals routinely used in the pool water;

(b) To detect chlorine gas at pools where compressed chlorine gas is used, using commercial strength ammonia vapor; and

(c) With accuracy in the ranges of measurements specified in Table 111.3 of Appendix A.

(7) **Chemicals in pool.** Owners shall ensure addition of chemicals or materials to WRF pool waters occurs only when the use is accepted by the department or local health officer.

(8) **Additional tests.** Owners shall perform any additional tests of WRF pool water or air required by the department or local health officer to assure public safety.

[Statutory Authority: Chapters 70.90 and 43.20 RCW. 04-18-096, § 246-260-111, filed 9/1/04, effective 10/31/04.]

WAC 246-260-121 Monitoring, reporting, and recordkeeping. (1) **Reporting death, injury, and illness.** Owners shall:

(a) Provide the department or local health officer with information requested regarding the investigation of an injury or illness associated with the WRF; and

(b) Notify the department or local health officer of a drowning, near drowning, death, serious injury or serious illness associated with the WRF within forty-eight hours after becoming aware of the occurrence.

(2) **Incidents.** Owners shall provide the department or local health officer with any information requested regarding the investigation of an incident creating a potential health or safety problem, for example, a chlorine gas leak.

(3) **Monitoring and recordkeeping.**

(a) Owners shall monitor the following water quality conditions of WRF pools and maintain records for a minimum of three years:

(i) Residual disinfectant concentration level frequently enough, but at least once every twenty-four hours, to determine that the residual is satisfactorily sustained to meet the requirements of WAC 246-260-111(3);

(ii) Hydrogen ion (pH) concentration frequently enough, but at least once every twenty-four hours, to determine that the level is maintained in a range of 7.2 to 8.0;

(iii) Alkalinity at least weekly;

(iv) If pool water temperature is over ninety-five degrees Fahrenheit, water temperature frequently enough, but at least once every twenty-four hours, to determine temperature does not exceed one hundred four degrees Fahrenheit; and

(v) If cyanuric acid or one of its derivatives is used in a pool, cyanurate level testing at least weekly and maintained at levels established in Table 111.2.

(b) Owners shall keep records for three years of:

(i) Quantities of all chemicals added to pool water each day;

(ii) Treatment system flow rates, measured at least daily; and

(iii) Any incidents of visible pool water contamination, for example, from vomit, feces, or blood.

(4) **Availability.** Owners shall make records required by this section available for department or local health officer review upon request.

[Statutory Authority: Chapters 70.90 and 43.20 RCW. 04-18-096, § 246-260-121, filed 9/1/04, effective 10/31/04.]

WAC 246-260-131 Operation of water recreation facilities. (1) **Operation plan.** Owners shall ensure proper operation to protect the public health, safety, and water quality by establishing standard practices and developing a written operations manual addressing each of the following:

(a) Physical pool facility components and signage;

(b) Personnel;

(c) Users and spectators, including pool rules;

(d) Emergency response provisions;

(e) Diving during supervised swimming instruction into water depths recognized as adequate by the organization certifying the activity, such as ARC; and

(f) Environmental conditions.

(2) **Physical components.** Owners shall check each WRF's physical components routinely to ensure:

(a) Barrier protection, emergency equipment and structural facilities are properly maintained.

(b) Water does not pond on walking surfaces;

(c) Common articles provided for patrons, such as towels, bathing suits, bathing caps, etc., are sanitized before reuse;

(d) Sanitation items including toilet tissue, handwashing soap and single use towels or equivalent are maintained at facilities;

(e) Treatment of the water recreation pool facility occurs continuously at turnover rates required by this chapter twenty-four hours a day during periods of use;

(f) Swimming, spa, wading and spray pools shall be equipped with drain covers that are properly maintained, intact and secured to protect against entrapment.

(g) Extra filter cartridge provided for each cartridge filter.

(3) **Food service.** If food service is provided and allowed, the owner shall:

(a) Ensure food and beverage sale and consumption areas at general use pools are separated from pool and deck enclosure areas;

(b) Prohibit food and beverage in pool water at limited use pools and maintain a minimum four-foot clear area between pool edge and any tables and chairs provided for food service;

(c) Prohibit use of glass in pool facility and provide trash containers; and

(d) Prohibit the sale or consumption of alcohol at general use pools.

(4) **Spa and recirculating spray pool reservoir cleaning.** Owners shall routinely drain, clean and refill spa and recirculation spray pools at a minimum frequency specified by the following formula.

Spa or spray pool reservoir volume in gallons/3/average number of users per day = Number of days between draining, cleaning and refilling.

(5) **Signage for user rules.**

(a) Owners shall provide and maintain signage specifying user rules and safety information required by this section in a conspicuous place in the pool area with easily readable lettering at least three-eighths of an inch high. All swimming,

spa and wading pool facilities must have signs stating pool rules:

(i) Prohibiting use by anyone running or participating in horseplay:

(ii) Prohibiting use by anyone under the influence of alcohol or drugs;

(iii) Prohibiting use by anyone with a communicable disease or anyone who has been ill with vomiting or diarrhea within the last two weeks;

(iv) Prohibiting anyone from bringing food or drink into the pool water;

(v) Requiring everyone to have a cleansing shower before entering the pool;

(vi) Requiring anyone in diapers to wear protective covering to prevent contamination;

(vii) Requiring diapers to be changed at designated diaper change areas;

(viii) Warning patrons that anyone refusing to obey the pool rules is subject to removal from the premises;

(ix) Directing patrons to the location of the nearest telephone and first-aid kit for emergency use;

(x) Advising patrons that anyone with seizure, heart, or circulatory problems should swim with a buddy; and

(xi) Where diving boards are used, provide signs for proper use.

(b) All swimming, spa, and wading pool facilities where lifeguards or attendants are not present shall have signs stating additional pool rules that:

(i) If a child twelve years of age or less is using the pool, a responsible adult eighteen years of age or older must accompany the child and be at the pool or pool deck at all times the child uses the facility; and

(ii) If an individual between thirteen years of age and seventeen years of age is using the pool, at least one other person must be at the pool facility.

(c) All spa pool facilities must have signs stating additional pool rules:

(i) Cautioning that children under the age of six should not use a spa pool;

(ii) Cautioning that persons suffering from heart disease, diabetes, or high blood pressure should consult a physician before using a spa pool;

(iii) Cautioning that women who are or might be pregnant seek physician's advice regarding using a spa pool;

(iv) Cautioning everyone to limit the stay in the spa pool to fifteen minutes at any one session; and

(v) Posting the maximum bather capacity of each spa pool.

(d) All spray pool facilities must have signs stating pool rules as specified in (a)(i), (ii), (iii), (iv), (v), (vi), and (viii) of this subsection.

(6) **Required personnel.**

(a) Owners shall ensure appropriate personnel specified in this subsection provide monitoring at pool facilities.

(b) General use swimming pool facilities shall have lifeguards present at all times pools are in use; except:

(i) If swim or dive teams are facility users, the owner may allow substitution of a qualified coach properly credentialed by the sponsoring organization furnishing the swim or dive coach; and

(ii) Owners may substitute persons with Master Scuba Diver Trainer or Master Scuba Diver Instructor certification through PADI or SCUBA instructor, assistant instructor or divemaster through NAUI or other department-approved training in lieu of lifeguards for SCUBA training.

(iii) PADI or NAUI certified scuba instructing staff shall maintain the following conditions:

(A) Limit number of persons training to ten persons per instructor.

(B) Ensure all persons being instructed are monitored at all times while in the pool to ensure thirty-second response time can be provided.

(iv) Private club swimming pool facilities must have lifeguards present at all times persons sixteen years of age and younger are using the pool facilities, except:

(A) Attendants or shallow water lifeguards may supervise persons thirteen through sixteen years of age when these users are restricted to a pool depth less than or equal to five feet; and

(B) Attendants or shallow water lifeguards may supervise all persons sixteen years of age and under if the entire pool depth is less than four and one-half feet.

(c) If a spa or wading pool is in same enclosure as a swimming pool, all pools are subject to the most stringent monitoring personnel requirements applicable for any pool in the enclosure unless barriers that conform to WAC 246-260-031(4) restrict access between pools.

(d) The use of spas or wading pools not requiring lifeguards or attendants is subject to the following conditions:

(i) If the pool is used by children twelve years of age or under, a responsible adult eighteen years of age or older must accompany the children and be at the pool or pool deck at all times the children use the facility;

(ii) If the pool is used by persons seventeen years of age or under, a minimum of two people must be at the pool facility at all times the pool is in use;

(iii) The owner shall post the requirements of this subsection to assure the responsible person is notified of conditions for use of the facility.

(e) Limited use pool facilities must have an equivalent or greater level of supervision as specified for private clubs in (b)(iv) of this subsection during any times when activities are provided that put the pools into the category of general use pools.

(f) At limited use pool facilities, if alcohol is sold within the pool facility, the owner must provide a lifeguard or attendant at the pool area.

(g) All pool facilities must have a water treatment operator.

(7) **Personnel duties and equipment.**

(a) Owners shall ensure personnel are present at each WRF who perform duties specified in this subsection.

(b) Lifeguards, shallow water lifeguards and swim coaches shall guard assigned pool users and provide a rescue response time of thirty seconds or less.

(c) Attendants, if provided at pools not requiring lifeguards, shall oversee pool use by the bathers and provide supervision and elementary rescues such as reaching assists to bathers in need. This does not mean the person is qualified or trained to make swimming rescues.

(d) Owners shall notify responsible persons on the conditions for facility use at pools not requiring lifeguards and for which no lifeguards or attendants are present. A responsible person means a person having responsibility for overseeing users seventeen years of age or under including, but not limited to, a person:

(i) Renting an apartment, hotel, motel, RV camp, etc.; or

(ii) Who is an owner or member of a condominium, homeowner's association, fraternity, equity ownership facility, mobile home park, sorority, or private club with a pool facility.

(e) Water treatment operators shall assure the water treatment components of each WRF are functioning to protect health, safety and water quality.

(f) Owners shall ensure that lifeguards, shallow water lifeguards, swim coaches, and attendants:

(i) Wear a distinguishing suit/uniform, or emblem; and

(ii) Carry a whistle or equivalent signaling device.

(8) **Personnel training.**

(a) Owners shall ensure that pool personnel required by subsection (6) of this section have skills necessary for their duties, obtained by training and certification specified in Table 131.1 in Appendix B, or equivalent.

(b) Owners shall keep a copy at the WRF of each currently valid certification required for pool personnel.

(c) Owners shall ensure safety-monitoring personnel obtain continuing education needed to maintain lifeguarding skills and maintain valid certifications required by this subsection.

(d) If SCUBA or kayaking lessons are conducted at a pool, owners shall ensure that personnel monitoring these activities are trained to recognize special hazards associated with these activities.

(9) **Emergency response plan.**

(a) Owners shall prepare and implement emergency response plans specified in this subsection.

(b) In pool facilities where lifeguards, shallow water lifeguards, or swimming coaches are required by subsections (6) and (7) of this section:

(i) Sufficient qualified personnel must be present and appropriately located to provide a rescue response time of thirty seconds or less for all pool users;

(ii) The number and qualifications of personnel present must be based on factors dealing with pool depth, line of sight, bather load, potential emergency procedures, and personnel rotation;

(iii) Emergency response drills must be held two or more times each year to test whether thirty-second response time can be met; and

(iv) A record of each response drill must be kept at the WRF for three or more years.

(c) In pool facilities where lifeguards are not present, in accordance with subsection (6)(c) and (e) of this section, owners shall adopt rules, provide enforcement of conditions for pool use and notify users when first using facility and at least annually thereafter that conditions for use include:

(i) If a child twelve years of age or less is using the pool, a responsible adult eighteen years of age or older shall accompany the child and be at the pool or pool deck at all times the child uses the facility; and

(ii) If anyone seventeen years of age or less is using the pool, a minimum of two people shall be at the pool facility.

(d) Emergency equipment specified in WAC 246-260-041, 246-260-051, and 246-260-071 must be readily available during WRF operating hours.

(e) In facilities where chlorine gas is used:

(i) WRF personnel shall conduct annual emergency drills; and

(ii) The plan shall identify the location of accessible chlorine cylinder repair kits.

(f) Operators shall ensure that lifeguards, shallow water lifeguards, and swim coaches receive ongoing training of emergency response skills.

(10) **Environmental conditions.** Owners shall monitor various environmental conditions affecting the facility or potentially affecting the health and safety of users. Owners shall close the WRF or take other appropriate action in response to adverse environmental factors, (e.g., electrical storms, fog, wind, and visibility problems) to ensure that the health and safety of users are protected.

(11) **Closure.** Owners shall close the facility when the facility presents an unhealthful, unsafe, or unsanitary condition. These conditions include lack of compliance with the water quality or an operation requirement in this section or in WAC 246-260-111.

[Statutory Authority: RCW 70.90.120. 05-09-004, § 246-260-131, filed 4/7/05, effective 5/8/05. Statutory Authority: Chapters 70.90 and 43.20 RCW. 04-18-096, § 246-260-131, filed 9/1/04, effective 10/31/04.]

WAC 246-260-141 Water recreation facility pools not in operation. (1) Owners of pool facilities that are not in operation shall prevent access to the facility by means of locked barriers.

(2) If a pool enclosure area has one pool open and another closed (e.g., seasonal pool, year-round spa), the owner shall ensure that the pool that is closed:

(a) Is posted with signage stating that the pool is closed; and

(b) Meets water clarity standards as outlined in Table 111.2 in WAC 246-260-111; or

(c) Is covered with a safety cover meeting ASTM standard F1346-91 and not allowing access to the pool.

(d) Does not create a nuisance or disease hazard.

(3) All pool covers must be completely removed during periods when the pool is open for use.

(4) If a pool that is closed develops an ice layer, the owner must install a safety cover meeting ASTM standard F1346-91 or the entire pool enclosure area must be closed.

(5) If a pool facility is not in operation for more than twelve months, the owner shall provide a safety cover over the pool meeting ASTM standard F1346-91 or the owner shall back fill the pool.

[Statutory Authority: Chapters 70.90 and 43.20 RCW. 04-18-096, § 246-260-141, filed 9/1/04, effective 10/31/04.]

WAC 246-260-151 Restrictions on animals. Owners shall prevent animal access to the WRF pool, except service animals in the deck area accompanying users or spectators requiring them. A service animal is defined in RCW 70.84.-021 and means an animal that is trained for the purposes of

assisting or accommodating a disabled person's sensory, mental, or physical disability.

[Statutory Authority: Chapters 70.90 and 43.20 RCW. 04-18-096, § 246-260-151, filed 9/1/04, effective 10/31/04.]

ADMINISTRATIVE RULES

WAC 246-260-171 Compliance. (1) Except as provided in subsections (2), (4), and (5) of this section, existing water recreation facilities with approved plans prior to October 31, 2004, that do not fully comply with the design, construction, and equipment requirements in WAC 246-260-031, 246-260-041, 246-260-051, 246-260-061, 246-260-071, and 246-260-081 may be continued in use.

(2) Owners of all facilities shall comply with the operational requirements in WAC 246-260-101 through 246-260-151.

(3) Owners of facilities designed and constructed after the effective date of these regulations shall comply with all applicable sections of the design, construction and equipment requirements in WAC 246-260-021 through 246-260-091.

(4) Facilities constructed prior to the effective date of these regulations shall comply with the barrier protection requirements in WAC 246-260-031 (4) and (5) and the emergency equipment requirements established in WAC 246-260-041 (11)(h); 246-260-071(7); and 246-260-081(4) by the compliance deadlines specified in the regulations. Barrier modifications or emergency shutoff switches made prior to the compliance deadlines shall meet the requirements in WAC 246-260-031 (4) and (5); and WAC 246-260-041 (11)(h); 246-260-071(7); and 246-260-081(4) at the time the modifications are made.

(5) When owners are modifying the physical plant of their facilities, they are required to upgrade the area of the physical plant being modified to conform to current requirements. For example, when owners having pool facilities with single main drains are changing or modifying their main drains they shall modify the main drains in compliance with the current requirements. This includes, but is not limited to:

(a) Resurfacing of pools that involves alteration of the drains; or

(b) Changes to the main drain outlet sump or its recirculation piping.

[Statutory Authority: RCW 70.90.120. 05-09-004, § 246-260-171, filed 4/7/05, effective 5/8/05. Statutory Authority: Chapters 70.90 and 43.20 RCW. 04-18-096, § 246-260-171, filed 9/1/04, effective 10/31/04.]

WAC 246-260-180 Bathing beaches. No bathing beach shall be maintained or operated when such water is determined by the health officer to be so polluted or subject to pollution as to constitute a menace to health if used for bathing. Where bathhouse and toilet facilities are provided for use of bathers they shall be constructed, maintained and operated in a sanitary manner approved by the health officer.

[Statutory Authority: RCW 43.20.050. 91-02-051 (Order 124B), recodified as § 246-260-180, filed 12/27/90, effective 1/31/91; Regulation .98.070, effective 3/11/60.]

WAC 246-260-181 Surveillance. Owners and operators shall allow the department and local health officer to perform on-site WRF inspections or conduct other surveillance activities considered necessary by the enforcing agency to ensure compliance with this chapter and chapter 70.90 RCW.

[Statutory Authority: Chapters 70.90 and 43.20 RCW. 04-18-096, § 246-260-181, filed 9/1/04, effective 10/31/04.]

WAC 246-260-191 Technical advisory committee. (1) The department shall appoint a technical advisory committee to assist in the following:

(a) Reviewing and drafting proposed rules; and

(b) Developing guidelines for use of new products, equipment, procedures, and periodic program review.

(2) The department may determine the need for and frequency of technical advisory committee meetings.

(3) The WRF technical advisory committee membership shall include representation from the following:

(a) General use pool facility owners;

(b) Limited use pool facility owners;

(c) NSPI;

(d) WRPA;

(e) Engineer or architect design consultants;

(f) Eastern and Western Washington local environmental health jurisdictions;

(g) The department; and

(h) Recreational water contact facility owners (as appropriate).

(4) The technical advisory committee may appoint subcommittees, as the committee determines appropriate to address specific issues.

(5) The department shall maintain minutes of meetings.

[Statutory Authority: Chapters 70.90 and 43.20 RCW. 04-18-096, § 246-260-191, filed 9/1/04, effective 10/31/04.]

WAC 246-260-201 Variance. (1) An owner (or their authorized representative) may apply to the department or local health officer for a variance to the requirements of this chapter for a water recreation facility. If the application relates to construction permits, it must be made at least thirty days prior to development of final plans and specifications. If the application relates to issuance of an operation permit, the owner shall present their proposal for a variance with the department or local health officer at least thirty days before any consideration of implementing an operation change. An application may not be approved unless, notwithstanding a noncompliant design or construction or noncompliant operation, the health and safety purposes behind requirements of this chapter are met. An applicant shall provide adequate documentation to meet these requirements including, but not limited to:

(a) The variance is consistent with the intent of this chapter;

(b) Protection from drowning, diving injury, entrapment, impact or falling hazards, tripping or slipping hazards;

(c) Maintenance of water and air quality, including equivalent disinfection, filtration, control of pH, physical water conditions, water clarity and prevention of contamination to preclude illness;

(d) Upon receipt of a complete application, the department or local health officer shall provide a written approval or denial of the variance.

(2) The department and each local health officer shall provide the board a written summary of variances granted the

previous year. This summary shall be submitted by January 31 of the following year or any time the board requests.

(3) The board may, at its discretion, require variance requests be submitted to it for review and approval.

[Statutory Authority: Chapters 70.90 and 43.20 RCW. 04-18-096, § 246-260-201, filed 9/1/04, effective 10/31/04.]

WAC 246-260-211 Enforcement. (1) The department or local health officer may enforce this chapter by one or more of the following actions:

(a) Conducting an informal administrative conference to explore facts and resolve problems, convened at the request of the department, local health officer, or owner;

(b) Issuing an order directing the WRF owner, operator, or the person responsible to cease violating this chapter or chapter 70.90 RCW;

(c) Requiring the WRF owner or authorized representative to participate in training to improve basic skills for operating pools;

(d) Assessing a civil penalty of up to five hundred dollars per violation per day; and

(e) Denying, suspending, or revoking a WRF construction or operating permits.

(2) Orders authorized under this section may include, but are not limited to, requirements to:

(a) Take corrective measures, which may include a schedule; necessary to gain compliance with this chapter and chapter 70.90 RCW; and

(b) Stop work or refrain from using a WRF or any portion of a WRF and approvals required by statute or rules are obtained.

(3) An order issued under this section shall:

(a) Be in writing;

(b) Name the facility and the person or persons to whom the order is directed;

(c) Briefly describe each action or inaction constituting a violation of this chapter or chapter 70.90 RCW;

(d) Specify any required corrective action, if applicable;

(e) Provide notice, as appropriate, that continued or repeated violation may subject the violator to the penalties specified in subsection (4) of this section.

(4) Continued or repeated violation of the provisions of this chapter or chapter 70.90 RCW may subject the violator to:

(a) Civil penalties of up to five hundred dollars;

(b) Denial, suspension or revocation of the facility's construction or operating permit; or

(c) Referral to the county prosecutor or attorney general's office.

(5) The department or local health officer may deny an application or reapplication for a WRF operating permit and may revoke or suspend a WRF operating permit of any person who:

(a) Previously had an operating permit suspended or revoked or had an operating permit application denied for reason;

(b) Failed or refused to comply with any provisions of this chapter, chapter 70.90 RCW, or any other statutory provision or rule regulating the WRF construction or operation; or

(c) Obtained or attempted to obtain an operating permit or any other required certificate of approval applicable to the WRF by fraudulent means or misrepresentation.

(6) The department or local health officer may summarily suspend a WRF operating permit, without a prior hearing, if the department or local health officer finds that the WRF presents an imminent hazard to public health or safety and incorporates a finding to that effect in an order.

[Statutory Authority: Chapters 70.90 and 43.20 RCW. 04-18-096, § 246-260-211, filed 9/1/04, effective 10/31/04.]

WAC 246-260-221 Hearings. A person aggrieved by the department's or local health officer's denial, suspension, or revocation of a WRF permit; issuance of an order or levy of a civil penalty may request an administrative hearing.

A hearing requested to contest a local health officer's action is governed by the local health jurisdiction's rules for hearings.

A hearing requested to contest a department action is governed by chapters 246-10 WAC and 34.05 RCW.

[Statutory Authority: Chapters 70.90 and 43.20 RCW. 04-18-096, § 246-260-221, filed 9/1/04, effective 10/31/04.]

WAC 246-260-9901 Fees. (1) CONSTRUCTION PERMIT FEES. The department establishes the fees listed in Table 990.1 for construction permits for carrying out its duties under WAC 246-260-021.

(a) The applicant must submit the base fee to the department prior to plan review initiation.

(b) Hourly charges for plan review will be charged regardless of whether the construction permit is issued or not.

(c) The department will issue the construction permit once full payment has been received.

(d) The applicant must pay the costs of a safety engineer to review plans when department determines need per WAC 246-260-021(4).

TABLE 990.1
CONSTRUCTION PERMIT FEES

	TYPE OF FACILITY	CONSTRUCTION PERMIT PLAN REVIEW FEES
I.	Swimming Pools 100,000 gallons or more in volume	$ 800.00 plus $ 99/hr. for all hours of review time greater than 8 hours
II.	Swimming Pools less than 100,000 gallons, Spa Pools, and Recirculating Spray Pools	$ 400.00 plus $ 99/hr. for all hours of review time greater than 4 hours

	TYPE OF FACILITY	CONSTRUCTION PERMIT PLAN
III.	Wading Pools and Nonrecirculating Spray Pools	$ 200.00 plus $ 99/hr. for all hours of review time greater than 2 hours
IV.	Alterations, renovations, or modifications to existing swimming, spa, wading or spray pools $ 100.00 plus $ 99/hr. for all hours of review time greater than 1 hour.	

(2) OPERATING PERMIT FEES The department establishes the fees listed in Table 990.2 for operating permits for carrying out its duties under WAC 246-260-101.

TABLE 990.2

FEE SCHEDULE
OPERATING PERMITS
Type + Number of Facilities

	Single Swim Pool	Single Spa Pool	Single Wading Pool	Spray Pool or Pools	Each Additional Swim, Spa, or Wading Pool
Operating Permit 0-6 month	$ 291.00	$ 255.00	$ 211.00	$ 105.00	$ 63.00
Operating Permit 6-12 months	$ 477.00	$ 424.00	$ 371.00	$ 159.00	$ 84.00

(3) Other Terms and Conditions:

(a) The department may charge an additional fee of $87 plus associated laboratory costs for any inspections beyond those provided under the annual operating permit when necessary due to violations of such items as (a) noncompliance with water quality standards, and (b) failure to comply with operational requirements for health and safety.

(b) The department may charge an alternate annual fee for an operating permit based on direct and indirect costs associated with issuance of the permit when arrangements are made with local health jurisdictions to administer all or portions of the duties associated with the operating permit. Except, that the fee for this operating permit cannot exceed the cost established by the previous portions of this regulation, but the fee may be less.

(c) During the first year of development of the operating permit and for new pool facilities built hereafter, or pools temporarily closed (significant period of several months) and reopened, there are provisions for prorating the costs for the operating permits.

(d) A reduction in fees, up to but not exceeding thirty percent, may be granted by the department when a facility operator can demonstrate a satisfactory level of training in pool safety, water quality, maintenance and operations. The department will develop criteria for these fee reductions within six months of the adoption of this regulation.

(e) For limited use facilities requiring operating permits which are serving less than fifteen living units, the operating permit shall be fifty percent of the fee. However, the department may charge a reinspection fee if necessary under (a) of other terms and conditions.

(f) Fees for multiple facilities at the same physical location shall have a maximum FEE CAP as follows: Seasonal (0-6 months) WRF's: $774 NOTE: The third and subsequent pool/spa at the same location will be charged $51 for each additional pool/spa.

Year around (>6 months) WRF's $1032 NOTE: The third and subsequent pool/spa at the same physical location will be charged $67 for each additional pool/spa.

(4) Examples of Fees Charged:

(a) If more than one pool at a facility and one is a year-round pool and another is a seasonal pool—year-round pool is base cost, seasonal pool is charged at additional fee charge. For example: Year-round spa = $424 plus seasonal swimming pool is $63 = $487 total operating permits.

(b) If a single swimming pool and a single spa pool is used at the facility, the fee schedule will include fees as noted. For a 0-6 month permit, the primary fee for the single swimming would be $291 and the spa pool would be viewed as the second pool at the facility and would have a fee of $63, total operating permit fees would be $354.

(c) If there are 12 pools/spas at a single year-around pool facility, the FEE CAP would apply and the maximum fee of $1032 would be charged. ($477 base fee, $84 for first additional pool/spa, $67 for the remaining ten year-around pools/spas (10 x $67 = $670)) Total fee before fee cap = $477 + $84 + $670 = $1231. After FEE CAP the total fee = $1032. If approved training were credited to this facility for the maximum 30% discount, the 30% would be applied to the FEE CAP fee of $1032; $1032 - 30% = $723.

[Statutory Authority: RCW 70.90.150. 06-16-120, § 246-260-9901, filed 8/1/06, effective 9/1/06. Statutory Authority: RCW 70.90.150 and 43.20B.-250. 03-14-146, § 246-260-9901, filed 7/2/03, effective 8/2/03. Statutory Authority: RCW 43.70.250, 70.90.150, and 43.20B.250. 01-14-047, § 246-260-9901, filed 6/29/01, effective 7/30/01. Statutory Authority: RCW 70.90.150 and 43.20B.020. 94-11-056, § 246-260-9901, filed 5/11/94, effective 6/11/94.]

WAC 246-260-998 Severability. If any provision of this chapter or its application to any person or circumstances is held invalid, the remainder of this chapter or the application of the provision to other persons or circumstances shall not be affected.

[Statutory Authority: RCW 43.20.050. 91-02-051 (Order 124B), recodified as § 246-260-998, filed 12/27/90, effective 1/31/91. Statutory Authority: RCW 70.90.120. 90-07-010 (Order 042), § 248-98-998, filed 3/12/90, effective 4/12/90.]

WAC 246-260-999 Appendix A—Water quality standards.

Table 111.1
Minimum and Maximum Levels of Disinfectant (ppm)*

SWIMMING POOL: ***	Minimum
Chlorine	1.5
Chlorine with cyanurate compound	2.0
Bromine	2.5

SPA & WADING POOL: ***	Minimum
Chlorine	3.0
Chlorine with cyanurate compound	3.5
Bromine	4.0

* Chlorine is measured as free available chlorine residual.
** Recirculating spray pools and sensory deprivation tanks shall meet spa and wading pool levels.
*** The maximum disinfectant level shall conform with manufacturers' recommendations and shall not exceed 10 ppm for any pool.

Table 111.2
Acceptable Ranges of Selected Chemical and Physical Water Quality Constituents

CHEMICAL OR PHYSICAL CONSTITUENT	MINIMUM	MAXIMUM
pH (Hydrogen ion)	7.2	8.0
Water clarity (safety)	Main drain and pool bottom visible at all times	-
Turbidity (shielding microorganisms T.U.)*	-	0.5
Cyanuric acid or its derivatives	0	90 ppm
Temperature**	-	104°F
Combined chlorine	-	50% of free chlorine
Ozone***	-	.05
Ionizers (Copper/Silver)	-	1.0/.05

* In peak periods, turbidity may increase to 1.0 T.U. provided turbidity returns to 0.5 T.U. within a six-hour period following peak use. Turbidity is not a required routine analysis. The local health officer may require turbidity monitoring if special conditions warrant.
** A pool facility thermometer shall be provided when the water temperature exceeds 95 degrees Fahrenheit.
*** Atmospheric measurement.

Table 111.3
Required Ranges of Accuracy and Incremental Readings for Field Test Kits

CHEMICAL TEST	MINIMUM TEST KIT RANGE	MINIMUM REQUIRED INCREMENTS ON KITS	MINIMUM ACCURACY
Free and total available chlorine and total bromine	0.5 - 10.0 ppm*	These increments are required to be on the test kit: 0.5, 1.0, 1.5, 2.0, 3, 5, 6, 10 ppm	±50% of the difference of incremental readings
pH (hydrogen ion)	7.0 - 8.2	Maximum increments of 0.4, e.g., 7.0, 7.4, 7.8, 8.2, Preferred increments of 0.2, e.g., 7.0, 7.2…. 8.0, 8.2	±50% of the difference of incremental readings
Cyanuric acid	20 - 100 ppm	20 ppm	±10
Alkalinity	0 - 300 ppm	20 ppm	±10
Temperature	60 - 110°F	Shall have increments of less than or equal to 2°F, e.g., 60, 62, 64 … 108, 110	±2°F

* Operators who demonstrate the ability to accurately perform test kit dilutions may be allowed to use test kits with a chlorine range of 1.5 - 5.0 ppm, thereby using dilutions to read up to 10 ppm.

[Statutory Authority: Chapters 70.90 and 43.20 RCW. 04-18-096, § 246-260-999, filed 9/1/04, effective 10/31/04.]

WAC 246-260-99901 Appendix B—Personnel training and certifications.

Table 131.1
Personnel Training and Certifications

PERSONNEL	TRAINING RECOGNIZED	CERTIFYING AGENCIES*
Lifeguards	Lifeguarding, CPR, and First Aid.	ARC, YMCA, Lifesaving Society, E&A, ALTI, Starguard
Shallow Water Lifeguards	Shallow Water Lifeguard or Bronze Cross Award, CPR, and First Aid.	E&A, Lifesaving Society
SCUBA Instruction	Master SCUBA Diver Trainer or Master SCUBA Diver Instructor (PADI). SCUBA Instructor, Assistant Instructor, or Divemaster (NAUI).	PADI, NAUI
Swim Coaches	Swim Coaches Safety Training, CPR and First Aid.	ARC, YMCA
Dive Coaches	Safety Training for Competitive Diving Coaches Option A or Safety Training for Competitive Diving Coaches Renewal Option A; and CPR & First Aid.	U.S. Diving

PERSONNEL	TRAINING RECOGNIZED	CERTIFYING AGENCIES*
Attendants	Aquatic Safety Assistant or Basic Water Rescue or Water Safety Plus and CPR.	YMCA, ARC, E&A

* The department determines equivalent certifying organizations providing training.

[Statutory Authority: Chapters 70.90 and 43.20 RCW. 04-18-096, § 246-260-99901, filed 9/1/04, effective 10/31/04.]

WAC 246-260-99902 Appendix C—First-aid kits for pool facilities.

First-Aid Kits for Pool Facilities
Standard 16 Unit Kit

	Units
Absorbent gauze 24"X72" (1 per package)	1
Adhesive bandages 1" (16 per package)	1
Bandage compresses 4" (1 per package)	2
Eye dressing (1 per package)	1
Scissors and tweezers	1
Triangular bandages 40" (1 per package)	2
Individualized antiseptic pads (3 per package)	1
Surgical gloves (2 pr. minimum, 4 recommended)	1
CPR mask (disposable or reusable type)	1
Adhesive gauze or elastic or self-adherent wrap roll material	1
Cold packs	1
First-aid cream or antibiotic ointment	1
1/2" or 1" rolls of tape (2 rolls per package)	1
Butterfly bandage	1
Knuckle or finger tip bandages	1
Body clean up parts	1
Additional units of required units	1

[Statutory Authority: Chapters 70.90 and 43.20 RCW. 04-18-096, § 246-260-99902, filed 9/1/04, effective 10/31/04.]

Chapter 246-262 WAC
RECREATIONAL WATER CONTACT FACILITIES

WAC

246-262-001 Purpose and authority.
246-262-010 Definitions.
246-262-020 General administration.
246-262-030 Construction permit.
246-262-040 Operating permit.
246-262-050 Water quality standards, analysis, and sample collection.
246-262-060 General design, construction, and equipment.
246-262-070 Specific design, construction, and equipment.
246-262-080 Operation.
246-262-090 Monitoring, reporting, and recordkeeping.
246-262-100 Inspection.
246-262-110 Advisory committee.
246-262-120 Enforcement.
246-262-130 Notice of decision—Adjudicative proceeding.
246-262-140 Insurance.
246-262-150 Compliance.
246-262-160 Variance.
246-262-170 Innovations—Substitutions.
246-262-990 Fees.

WAC 246-262-001 Purpose and authority. The purpose of these rules is to protect the health, safety, and welfare of users of recreational water contact facilities (RWCFs). The rules as set forth are adopted per RCW 70.90.120.

[Statutory Authority: RCW 43.20.050. 91-02-051 (Order 124B), recodified as § 246-262-001, filed 12/27/90, effective 1/31/91. Statutory Authority: RCW 70.90.120. 88-13-125 (Order 311), § 248-97-010, filed 6/22/88.]

WAC 246-262-010 Definitions. (1) "Advanced first aid" means a course of instruction recognized by the American Red Cross, department of labor and industries, the U.S. Bureau of Mines, or fire services training program.

(2) "ANSI" means American National Standard Institute.

(3) "Approved" means the department or local health officer has stated in writing that the design plans and specifications are in accordance with chapter 246-262 WAC.

(4) "ARC" means American Red Cross.

(5) "Architect" means a registered architect currently licensed under chapter 18.08 RCW in Washington state.

(6) "ASTM" means American Society for Testing Material.

(7) "Attendant" means a person trained to operate an attraction and control the users in a safe orderly manner.

(8) "Attraction or ride" means any of the specific types of recreational facilities involving partial or total immersion or intentional contact with the water designated for public recreational use.

(9) "Biomechanics" means the study of the human body as a system operating under the laws of Newtonian mechanics and the biological laws of life.

(10) "Board" means the state board of health.

(11) "Boogie or mini-surf board" means any semirigid device used in a wave pool for flotation or as a riding device.

(12) "Centerline" means the path defined by geometric midpoints of a component or structure, generally used in consideration of the slide path in flume rides.

(13) "Communication system" means any combination of devices permitting the passage of or exchange of messages between park operating personnel and between operating personnel and users. Systems can include, but are not limited to, two-way radios, hardwired intercoms, horns, whistles, hand signals, direct voice, signs, or equivalent.

(14) "Contaminant" means any physical, chemical or biological substance present in the RWCF water which may adversely affect the health or safety of the user and/or the quality of the water.

(15) "CNCA" means Council for National Cooperation in Aquatics.

(16) "Cross-connection" means any physical arrangement connecting:

(a) A potable water system directly or indirectly, with anything other than another potable water system; or

(b) A RWCF to any potable or nonpotable water source capable of contaminating either the RWCF or potable water source as a result of backflow.

(17) "Department" means the department of health.

(18) "Discharge section" means the component or components making up the exit of the water slide, water tube,

inner tube ride, speed slide, ramp slide, drop slide or drop tube, or kiddie flume. These components are the elements controlling the final direction and speed of the user.

(19) "Diving envelope" means the minimum dimensions of an area within the pool necessary to provide entry from a diving board, platform, or attraction segment where users enter above pool water level.

(20) "Drop slide or drop tube ride" means a sloped trough, chute, or tube exiting the user above the pool operating water level.

(21) "Engineer" means a registered professional engineer currently licensed under chapter 18.43 RCW in Washington state.

(22) "Entry access points" means the areas where users enter an attraction.

(23) "Entry rate" means the frequency at which users are permitted access to the attraction.

(24) "Ergonomics" means a multidisciplinary activity dealing with the interactions between humans and their environment plus the traditional environmental elements atmosphere, heat, light, and sound, as well as objects with which the user comes in contact.

(25) "FINA" means Federation Internationale de Natation Amaueur.

(26) "Flume or tube entry" means the area at which users enter a water slide, water tube, inner tube ride, speed slide, drop slide, drop tube, or kiddie flume.

(27) "fps" means feet per second.

(28) "gpm" means gallons per minute.

(29) "IAAPA" means International Association of Amusement Parks and Attractions.

(30) "Injury or illness report" means the written record of all facts regarding an injury or illness associated with the RWCF.

(31) "Inner tube ride" means an attraction where users ride inner tube-like devices through a series of chutes, channels, flumes, and pools.

(32) "Innovative recreational water contact facility" means any type of RWCF currently unregulated.

(33) "Intermediate pool" means any pool between the entry and exit pools in attraction using a series of pools.

(34) "Kiddie flume or tube attraction" means a flume, chute, or tube designated for and restricted to use by small children.

(35) "Lifeguard" means an individual currently certified by red cross in advance lifesaving or lifeguard training, or YMCA senior lifesaver, or equivalent certification through the royal Canadian lifeguard services.

(36) "Lifeguard station" means the designated work station of the lifeguard.

(37) "Local health officer" means the health office of the city, county, or city-county department or district or a representative authorized by the local health officer.

(38) "mg/l" means milligrams per liter.

(39) "Multiactivity pool" means a pool with more than one type of attraction (i.e., an adult activity pool with a series of tubes, chutes, cable rides, etc., intended for use by individuals with specific swimming abilities).

(40) "NSF" means National Sanitation Foundation.

(41) "NSPI" means National Spa and Pool Institute.

(42) "Operating levels" means water levels maintained within attractions during use for proper operation of facility and for controlling safety and sanitation.

(43) "Operations" means all aspects of a RWCF, which must be controlled to make the facility safe, healthy, and usable for the purpose intended.

(44) "Owner" means a person owning and responsible for a RWCF or authorized agent.

(45) "Person" means an individual, firm, partnership, copartnership, corporation, company, association, club, government entity, or organization of any kind.

(46) "Ponding" means a condition where water fails to drain from walking surfaces.

(47) "ppm" means parts per million.

(48) "Primary zone of visual coverage" means the area assigned to a lifeguard or attendant for primary visual surveillance of user activity.

(49) "Radius of curvature" means the radius arc which denotes the curved surface from the point of departure from the vertical sidewall (springline) of the pool to the pool bottom.

(50) "Ramp slide" means a slide allowing one or more users to slide in unison down a straight incline to a runout or a receiving pool.

(51) "Recirculation filter water" means water which is recirculated by the RWCF for treatment purposes, i.e., filtration and disinfection.

(52) "Response time" means elapsed time between bather distress and initiation of rescue assistance by a lifeguard (or attendant where applicable).

(53) "RWCF" means recreational water contact facility which is an artificial water associated facility with design and operational features that provide patron recreational activity which is different from that associated with a conventional swimming pool and purposefully involves immersion of the body partially or totally in the water and includes, but is not limited to, water slides, wave pools, and water lagoons.

(54) "Secretary" means the secretary of the department of health.

(55) "Serious injury" means any injury requiring admission to a hospital.

(56) "Speed slide or speed tube" means a sloped trough, flume, tube, or roller track having long straight and/or steep drops where users sustain speeds of twenty miles per hour or more.

(57) "Springline" means the point from which the pool wall breaks from vertical and begins its arc in the radius of curvature (for coved construction) to the bottom of the pool.

(58) "Surfboard" means a rigid device used in a wave pool for riding.

(59) "Tail coverage" means providing insurance coverage for a given period of time for discovery of claims made after the policy term for "claims made" type of insurance.

(60) "Total turnover" means the time it takes for the pool attraction water volume to be recirculated as a sum of the flows from treatment turnover and attraction recirculation systems turnover.

(61) "Treatment turnover" means the minimum time necessary to circulate the entire attraction water volume through the recirculation filter system.

(62) "T.U." means turbidity unit as measured by the nephelometric method.

(63) "Wading activity pool" means a pool or area less than twenty-four inches in total water depth with activities intended for younger children.

(64) "Walking surface" means any direct access surface to the attractions or change rooms where the user will be in bare feet. Areas set aside for picnicking, sunbathing, and lounging are excluded.

(65) "Water slide or water tube" means a sloped trough-like flume or tube structure of varying slope and direction using water as a lubricant and/or method of regulating the rider speed.

(66) "Water treatment operator" means the person appointed to operate the mechanical equipment and perform related water quality monitoring for proper operation of the physical facility.

(67) "Wave pool" means a recreational pool producing waves which usually begin at the deep end and proceed toward and dissipate at the shallow end.

(68) "WWA" means World Waterpark Association.

[Statutory Authority: RCW 70.90.120. 92-02-020 (Order 226B), § 246-262-010, filed 12/23/91, effective 1/23/92. Statutory Authority: RCW 43.20.050. 91-02-051 (Order 124B), recodified as § 246-262-010, filed 12/27/90, effective 1/31/91. Statutory Authority: RCW 70.90.120. 88-13-125 (Order 311), § 248-97-020, filed 6/22/88.]

WAC 246-262-020 General administration. (1) The department and the local health officer for each local health jurisdiction containing a RWCF shall develop a joint plan of operation listing the roles of each agency for administering these rules. The plan shall designate who will be responsible for:

(a) Plan review;

(b) Permit issuance;

(c) Inspection;

(d) Surveillance; and

(e) Enforcement.

(2) The department shall have information on which agency to contact for obtaining construction and operation permits.

(3) Fees may be charged as authorized in RCW 70.90.-150.

[Statutory Authority: RCW 43.20.050. 91-02-051 (Order 124B), recodified as § 246-262-020, filed 12/27/90, effective 1/31/91. Statutory Authority: RCW 70.90.120. 88-13-125 (Order 311), § 248-97-030, filed 6/22/88.]

WAC 246-262-030 Construction permit. (1) Persons planning to construct, alter, or modify a RWCF, excluding routine maintenance, shall provide the following to the department or local health officer for review and approval:

(a) A completed construction permit application:

(b) Three sets of plans and specifications prepared and signed by an engineer or architect; and

(c) A report prepared by an engineer certifying the design of the RWCF is consistent with accepted safety engineering practices and industrial standards. Such engineer shall have experience in safety design, including ergonomic aspects of biomechanics of RWCFs, amusement rides, or equal.

(2) Owners may schedule a predesign meeting with the designer and the department or local health officer to determine if the project is consistent with the intent of these rules;

(3) Following review of the completed permit application and plans and specifications, the department or local health officer shall:

(a) Forward written approval, including construction permit, or denial to the owner;

(b) Forward a copy of approved plans to the designer; and

(c) Forward a copy of the approval letter to the department or local health officer and local building department.

(4) The owner shall ensure any construction, modification, or alteration is completed according to approved plans and specifications;

(5) Upon completion of RWCF construction, alteration, or modification and prior to use, owners shall:

(a) Submit to the department or local health officer a construction report signed by an engineer or architect certifying that construction is substantially in compliance with approved plans and specification; and

(b) Notify the department or local health officer at least five working days prior to intended use of the facility.

(6) Owners of the RWCF must comply with all other applicable agency codes and standards. These include, but are not limited to:

(a) The National Electrical Code, chapter 19.28 RCW and chapter 296-46 WAC as determined by the electrical section of the Washington state department of labor and industries.

(b) Local gas piping and appliance codes, American Gas Association standards, and certification meeting the latest ANSI Z21.56 or other applicable and equivalent standards;

(c) Local building authority standards, including structural design of components;

(d) State and local plumbing authority standards;

(e) Washington state department of labor and industries requirements for pressure vessels under chapter 70.79 RCW and chapter 296-104 WAC; and

(f) Codes designated under chapter 70.92 RCW for handicapped accessibility.

[Statutory Authority: RCW 43.20.050. 91-02-051 (Order 124B), recodified as § 246-262-030, filed 12/27/90, effective 1/31/91. Statutory Authority: RCW 70.90.120. 88-13-125 (Order 311), § 248-97-040, filed 6/22/88.]

WAC 246-262-040 Operating permit. (1) No person shall operate a RWCF without a current operating permit issued by the department or local health officer.

(2) To obtain an operating permit, owners of an RWCF must provide information to the department or local health officer that shows the RWCF is in compliance with these rules.

(3) Operating permits shall be:

(a) Valid for one year;

(b) Renewed annually; and

(c) Nontransferable without written consent of the department or local health officer. For purposes of this section, a change in management of a corporation, partnership, association, or other nonindividual business entity shall create a new person requiring either consent to a permit transfer or issuance of a new permit upon proper application.

(4) The department or local health officer issuing the operating permit may revoke or suspend the permit if the RWCF is not operated in accordance with chapter 70.90 RCW or chapter 246-262 WAC.

[Statutory Authority: RCW 70.90.120. 92-02-020 (Order 226B), § 246-262-040, filed 12/23/91, effective 1/23/92. Statutory Authority: RCW 43.20.050. 91-02-051 (Order 124B), recodified as § 246-262-040, filed 12/27/90, effective 1/31/91. Statutory Authority: RCW 70.90.120. 88-13-125 (Order 311), § 248-97-050, filed 6/22/88.]

WAC 246-262-050 Water quality standards, analysis, and sample collection. (1) Owners shall maintain waters free from harmful levels of disease-producing organisms, toxic chemicals, or adverse physical conditions.

(2) Owners shall maintain RWCF waters to meet standards of bacteriological quality. Standards include:

(a) Heterotrophic plate counts not to exceed a density of two hundred bacteria per milliliter in any series of tests; and

(b) Total coliform density not to exceed an average of one coliform bacteria per one hundred milliliters in any series of tests.

(3) Owners shall maintain continuous and effective methods of disinfection of RWCF waters at all times with use of:

(a) Chlorine or bromine as described in Table 1 of this section; and/or

(b) Alternate forms of disinfection which meet the following criteria:

(i) Registered with the environmental protection agency, if necessary;

(ii) Registered with the Washington state department of agriculture, if necessary;

(iii) Conformance with NSF standard 50 or equal when applicable; and

(iv) Adherence to guidelines established by the department.

(4) Owners shall maintain:

(a) Physical and chemical conditions within the ranges specified in Table 2 of this section; and

(b) Cleanliness by:

(i) Closing an affected area of the RWCF or affected portion when contaminated with feces, vomit, sewage, or other hazardous or unknown material until the area is clean, disinfected, and free of the hazardous material;

(ii) Daily removal of scum or floating material on the pool water surface; and

(iii) Continuous removal of scum or floating material by action of overflow of pool water with flotsom screened and filtered.

(5) Persons collecting water samples for laboratory analysis shall:

(a) Collect and transport samples for chemicals and micro-organisms based on the most recently published edition of standard methods for the examination of water and waste/water analysis published jointly by the American Public Health Association/Water Pollution Control Federation and American Waterworks Association; hereafter, it is referred to as "standard methods;"

(b) Have laboratory tests performed per "standard methods" at laboratories approved by the department to provide such analyses;

(c) Provide adequate data for completing analyses; and

(d) Use water sample bottles approved by the department for collection of samples.

(6) Persons shall use field test kits with a suitable range of accuracy for the parameters routinely measured as noted in Table 3 of this section.

(7) Owners shall require and ensure addition of chemicals or materials to RWCF water only when the use has been approved or recognized as acceptable by the department. Current lists of approved or acceptable materials are available from the department.

(8) Owners shall perform additional tests as directed by the department or local health officer.

TABLE 1
MINIMUM AND MAXIMUM LEVELS OF DISINFECTANTS

Currently Recognized Disinfectants	Type of Residual Measured	pH Ranges 7.2-7.49; Minimum Residual Levels of Disinfectant in mg/1	7.5-7.79	7.8-8.0	Maximum Residual Level in mg/1*
1. Chlorine	Free available chlorine	1.0	1.4	1.8	8
2. Chlorinated cyanurate	Free available chlorine	1.5	2.0	2.8	8
3. Bromine	Total available bromine	2.0	2.5	3.5	8

Note:

* Maximum residual or manufacturer's recommendation (whichever is less).

TABLE 2
ACCEPTABLE RANGES OF SELECTED
PHYSICAL AND CHEMICAL WATER QUALITY CONSTITUENTS

Chemical or Physical Constituent	Minimum	Maximum
1. pH	7.2	8.0
2. Water Clarity (safety)	main drain visible at all times	—
3. Turbidity (shielding micro-organisms from disinfection)	—	0.5* T.U.
4. Cyanuric acid or its derivatives (if used)	0	90 mg/1
5. Temperature		104°F.

Note:

* In peak use periods, turbity may increase to 1.0 T.U. provided it returns to 0.5 T.U. within a six-hour period after peak use. Turbidity is not a required routine analysis which must be performed by the RWCF. Turbidity monitoring may be required by the department or local health officer if special conditions warrant it.

TABLE 3
RANGE OF ACCEPTABLE TESTING LEVELS*

Chemical Test	Minimum Range	Minimum Accuracy
1. Free available chlorine	0.3 to 3.0 mg/1	0.2 mg/1
2. Total chlorine	0.3 to 3.0 mg/1	0.2 mg/1
3. Total bromine	0.3 to 3.0 mg/1	0.2 mg/1
4. pH	7.0 to 8.2	0.2
5. Cyanuric acid	0 to 100 mg/1	5 mg/1
6. Alkalinity	0 to 300 mg/1	15 mg/1

Note:

* Do not make determinations of chemical conditions based on readings at the extreme measurable limits of the scale.

[Statutory Authority: RCW 43.20.050. 91-02-051 (Order 124B), recodified as § 246-262-050, filed 12/27/90, effective 1/31/91. Statutory Authority: RCW 70.90.120. 88-13-125 (Order 311), § 248-97-060, filed 6/22/88.]

WAC 246-262-060 General design, construction, and equipment. (1) Owners shall locate RWCFs to:

(a) Minimize pollution by dust, smoke, soot, and other undesirable substances;

(b) Eliminate pollution from surrounding surface drainage; and

(c) Ensure pools within the RWCF are more than fifteen feet from any structure, object, or land formation (i.e., pumphouse, tree, etc.), which would provide a user with the opportunity to jump from such a structure into the pool. This does not include any barriers provided to prevent unauthorized access to pool or segments of attractions which enter pool.

(2) Owners shall use only materials in the structure and equipment which are nontoxic, durable, inert, impervious to water, and easily cleaned.

(3) Owners shall design and maintain walking surfaces which are:

(a) Sloped a minimum one-fourth inch per foot;

(b) Of a nonslip finish;

(c) Equipped with sufficient drains to prevent standing water;

(d) Free of resilient coverings, e.g., carpeting; and

(e) At least four feet in width.

(4) Owners shall provide adequate barrier protection to prevent unauthorized access including:

(a) In outdoor facilities, a barrier six feet or more in height with:

(i) Openings, holes, or gaps not to exceed four inches except openings protected by gates or doors; and

(ii) Lockable gates and entrances either regulated during periods of use or provided with a self-closing, self-latching mechanism a minimum of forty-two inches from the ground.

(b) In indoor facilities, suitable barriers to prevent access by unauthorized individuals or pool access by unattended small children.

(5) Owners shall ensure that pools:

(a) Comply with all provisions of chapter 246-260 WAC where pool facilities are a separate attraction;

(b) Have surfaces with:

(i) Materials complying with subsection (2) of this section;

(ii) Watertight and nonabrasive construction;

(iii) Nonslip finish where users are walking; and

(iv) White or light color finish not obscuring the view of objects or surfaces.

(c) Are dimensionally designed to provide for the safety of the user and circulation of the water including, but not limited to:

(i) Absence of protrusions, extensions, means of entanglement, or other obstruction which can cause entrapment or injury;

(ii) Construction tolerances conforming with current ANSI public pool standards;

(iii) Uniform pool floor slopes as follows:

(A) Not exceeding one foot of drop in seven feet of run for pools serving as landing or exiting pools, where total water depth is less than forty-eight inches; and

(B) Providing a maximum slope of one foot of drop in twelve feet of run up to a depth of five and one-half feet in pools where users enter and participate in extended activities.

(iv) Vertical walls for a minimum distance noted in Table 4 of this section, which may be curved (not to exceed allowable radius) to join the floor.

(A) Vertical means walls not greater than eleven degrees from plumb.

(B) Coving or portion of the side wall of a diving area in the pool shall conform as described in subsection (5)(c)(vi) of this section.

(C) In new construction or alterations to existing construction, ledges are prohibited.

(D) Requirements in subsection (5)(c) of this section do not apply to spas.

(v) A maximum intrusion beyond the vertical (as defined in subsection (5)(c)(iv)(A) of this section) with any configuration not to exceed a transitional radius from wall to floor where floor slopes join walls and which:

(A) Has its center of radius no less than the minimum vertical depth specified in Table 4 of this section below the water level;

(B) Has arc of radius tangent to the wall; and

(C) Has a maximum radius of coving (or any intrusion into the pool wall/floor interface) determined by subtracting the vertical wall depth from the total pool depth.

TABLE 4
MAXIMUM RADIUS COVING OR POOL INTRUSION DIMENSIONS BETWEEN POOL FLOOR AND WALL*

Pool Depth	2'0"	2'6"	3'0"	3'6"	4'0"	4'6"	5'0"	>5'0"
Minimum Slide Wall Vertical Depth	1'6"	1'10"	2'2"	2'6"	2'10"	3'2"	3'6"	>3'6"
Maximum Radius of Curvature	6"	8"	10"	12"	1'2"	1'4"	1'6"	**Maximum radius equals pool depth minus the vertical wall depth

Note:

* For pool depths which fall between the depths listed, values can be interpolated.

** Radius of coving cannot intrude into pool within diving envelope or deep water entry area for attractions entering above pool water level.

(vi) Provision of diving envelopes in pools or areas of pools designated for diving activities to include:

(A) A diving envelope of no less than the CNCA standard configuration* noted in Figure 1 of this section in areas where user would enter from deck level, diving board, or platform at a height of less than one-half meter (twenty inches).

Note:

* This requirement is based on a standard described in CNCA publication "Swimming Pools: a Guide to their Planning, Design, and Operation" 1987. Fourth edition. Human Kinetics Publisher, Inc., Champaign, Illinois. Figure 8.1

FIGURE 1:

Minimum dimensions for pools with provision for diving from deck level or providing boards or platforms at a height less than one-half meter.

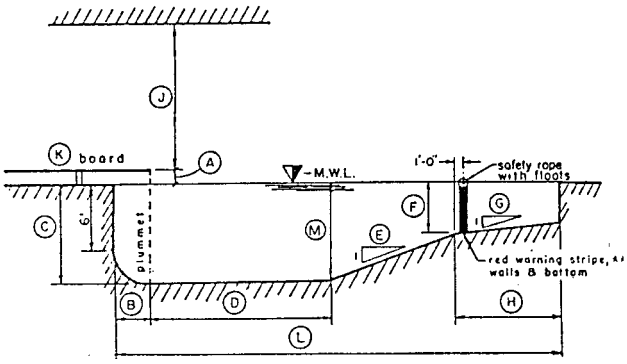

Dimension	Minimum	Preferred or Maximum
A Height of board above water		20 in.
B Board overhang	2 ft 6in.	3 ft
C Depth of water at plummet	9 ft	10 ft*
D Distance from plummet to start of upslope	16 ft	18 ft*
E Inclination of upslope of bottom		1:3
F Depth of water at breakpoint	4 ft 6 in.	
G Slope of bottom in shallow portion of pool	1:12	1:15*
H Length of shallow section of pool	8 ft	14 ft*
I Distance to any overhead structure	13 ft	15 ft*
K Board length		12 ft
L Length of pool	40 ft	50 ft*
M Dimension not less than C minus	6 in.	

Note:

* Values with asterisks are not to be considered as maximums.

** Warning stripe at break point may be of any contrasting color.

(B) A diving envelope of no less than the FINA standard configuration** noted in Figure 2 of this section in areas where user would enter from diving board or platform at a height of one-half meter (twenty inches) or greater.

Note:

** This requirement is based on a standard described in FINA publication "FINA Handbook - 1986-1988." Constitution and rules governing swimming, diving, water polo, and synchronized swimming, 1986-1988. Edited by E. Allen Harvey, Vancouver, Canada VGN 3R6, Section D, pp. 114-115.

FIGURE 2:

Minimum dimensions for pools with boards or platforms at a height of one-half meter or more.

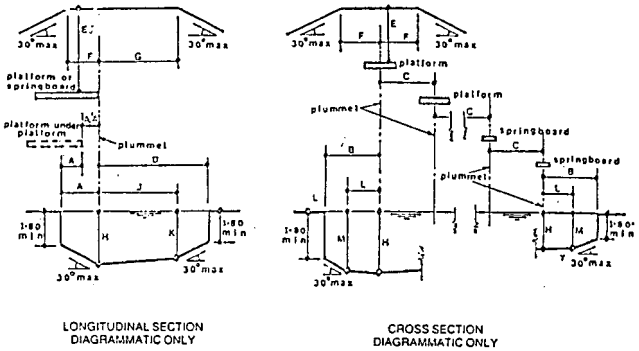

	Dimensions	SPRINGBOARD				PLATFORM									
FINA	are in Metres	1 Metre		3 Metres		1 Metres		3 Metres		5 Metres		7.5 Metres		10 Metres	
DIMENSIONS FOR	LENGTH	4.80		4.80		4.50		5.00		6.00		6.00		6.00	
DIVING FACILITIES	WIDTH	0.50		0.50		0.60		1.50		1.50		1.50		2.00	
Revised to 1st Jan 1987	HEIGHT	1.00		3.00		0.60-1.00		2.60-3.00		5.00		7.50		10.00	
		HORIZ	VERT	HORIZ	VERT	HORIZ	VERT	HORIZ	VERT	HORIZ	VERT	HORIZ	VERT	HORIZ	VERT
A From plummet	DESIGNATION	A-1		A-3		A-1P1		A-3P1		A-5		A-7.5		A.10	
BACK TO POOL WALL	MINIMUM	1.80		1.80		0.75		1.25		1.25		1.50		1.50	
A/A From plummet	DESIGNATION									AA5/1		AA7.5/3/1		AA10/5/3/1	
BACK TO PLATFORM Plummet directly below	MINIMUM									1.50		1.50		1.50	
B From plummet to	DESIGNATION	B-1		B-3		B-1p1		B-3p1		B-5		B-7.5		B-10	
POOL WALL AT SIDE	MINIMUM	2.50		3.50		2.30		2.90		4.25		4.50		5.25	
C From plummet to	DESIGNATION	C-1/1		C-3/3/1		C-1/1p1		C-3/1P1/3p1		C-5/3/1		C-7.5/5/3/1		C-10/7.5/5/3.	
ADJACENT PLUMMET	MINIMUM	2.40		2.60		1.65		2.10		2.50		2.50		2.75	
D From plummet to	DESIGNATION	D-1		D-3		D-1p1		D-3p1		D-5		D-7.5		D-10	
POOL WALL AHEAD	MINIMUM	9.00		10.25		8.00		9.50		10.25		11.00		13.50	
E On plummet, from	DESIGNATION		E-1		E-3		E-1p1		E-3p1		E-5		E-7.5		E-10
BOARD TO CEILING	MINIMUM		5.00		5.00		3.50		3.50		3.50		3.50		5.00
F CLEAR OVERHEAD	DESIGNATION	F-1	E-1	F-3	E-3	F-1p1	E-1p1	F-3p1	E-3p1	F-5	E-5	F-7.5	E-7.5	F-10	E-10
behind and each side of plummet	MINIMUM	2.50	5.00	2.50	5.00	2.75	3.50	2.75	3.50	2.75	3.50	2.75	3.50	2.75	5.00
G CLEAR OVERHEAD	DESIGNATION	C-1	E-1	C-3	E-3	G-1p1	E-1p1	G-3p1	E-3p1	G-5	E-5	G-7.5	E-7.5	G-10	E-10
ahead of plummet	MINIMUM	5.00	5.00	5.00	5.00	5.00	3.50	5.00	3.50	5.00	3.50	5.00	3.50	6.00	5.00
H DEPTH OF WATER	DESIGNATION		H-1		H-3		H-1p1		H-3p1		H-5		H-7.5		H-10
at plummet	MINIMUM		3.50		3.80		3.30		3.60		3.80		4.50		5.00
J DISTANCE AND DEPTH	DESIGNATION	J-1	K-1	J-3	K-3	J-1p1	K-1p1	J-3p1	K-3p1	J-5	K-5	J-7.5	K-7.5	J-10	K-10
K ahead of plummet	MINIMUM	5.00	3.40	6.00	3.70	5.00	3.20	6.00	3.50	6.00	3.70	8.00	4.40	11.00	4.75
L DISTANCE AND DEPTH	DESIGNATION	L-1	M-1	L-3	M-3	L-1p1	M-1p1	L-3p1	M-3p1	L-5	M-5	L-7.5	M-7.5	L-10	M-10
M each side of plummet	MINIMUM	1.50	3.40	2.00	3.70	1.40	3.20	1.80	3.50	4.25	3.70	4.50	4.40	5.25	4.75
N MAXIMUM SLOPE TO REDUCE DIMENSIONS beyond full requirements	POOL DEPTH	30 degrees		NOTE Dimensions C (plummet to adjacent plummet) apply for Platform with widths as detailed. For wider Platforms increase C by half the additional width(s)											
	CEILING HT	30 degrees													

(d) Have adequate handholds around the perimeter in pools designed for extended swimming and bathing activity and excluding wave pools; and

(e) Stairs, ladders, or stepholes with:

(i) Stairs, when provided, meeting the following construction requirements:

(A) Treads of a nonslip finish;

(B) Stair tread edges colored to contrast with the color of the pool and clearly visible to the users;

(C) Recessed in pool areas used for lap swimming or provided with wave action; and

(D) Equipped with handrails extending over the edge of the deck.

(ii) Ladders or stepholes which:

(A) Furnish exit from pools greater than four feet in depth except in landing pools bringing the user toward a shallow area after entering the water;

(B) Are spaced a minimum of one for every fifty feet of pool perimeter greater than four feet deep;

(C) Are provided at both sides of the deep end in pools over thirty feet in width; and

(D) Are equipped with a handrail at the top of both sides extending over the coping or edge of the deck.

(iii) User access at the shallow end of pool.

(6) Owners shall ensure treatment turnover at rates no less than designated as follows:

(a) In receiving pools for water slides, water tubes, inner tube rides, speed slides or tubes, drop slides or tubes, and kiddie flume slides, treatment turnover time can be based on any of the following:

(i) Total attraction volume in one-hour period;

(ii) Treatment turnover equals design peak usage (maximum users per hour) expressed in gpm;

(iii) A rate of one hour for 20,000 gallons per two or less attraction segments. Treatment turnover times may increase proportionately for larger pool volumes per two or less attraction segments;

(iv) Alternative methods where provisions to reduce contaminants are justified to the satisfaction of the department or local health officer; and

(v) Treatment turnover times not to exceed six hours.

(b) For wave pools, a minimum treatment turnover time of two hours; and

(c) For activity pools, a minimum treatment turnover time of four hours.

(7) Owners shall provide pool inlets which are:

(a) Submerged and located to produce uniform circulation of water and chemicals throughout the pool; and

(b) Located on the bottoms of pools greater than two thousand five hundred square feet, unless otherwise justified by the engineer to the satisfaction of the department or local health officer.

(8) Owners shall provide pool outlets with:

(a) Overflow and main drain with each designed to carry one hundred percent of total recirculation filter flow;

(b) Overflow outlets that have:

(i) Design to maintain a minimum of sixty percent of filter recirculation flow at all times;

(ii) An overflow channel on the pool perimeter to promote uniform circulation and skimming action of the upper water layer for pools greater than twenty-five hundred square feet, with:

(A) Design preventing matter entering channel from returning to the pool;

(B) Dimensions minimizing the hazard for bathers, such as catching arms or feet in an overflow channel;

(C) 0.01 foot slope per foot or more;

(D) Drains sufficiently spaced and sized to collect and remove overflow water to return line to filter where applicable;

(E) Size sufficient to carry one hundred percent of the recirculation flow plus the surge flow equivalent to one-fifth of the balancing tank expressed in gallons per minute.

(iii) Skimmers, when used on pools up to twenty-five hundred square feet, if:

(A) Demonstrated to operate properly under design conditions;

(B) Turbulence is not expected to interfere with operation;

(C) Maximum flow rate through skimmers does not exceed four gpm per inch of weir;

(D) Devices are recessed in the wall of the pool so that no part protrudes beyond the plane of the wall into the pool;

(E) The skimmer is equipped with a device to prevent air lock in the recirculation suction line (i.e., an equalizer line); and

(F) The skimmer is equipped with a removable and cleanable screen designed to trap large solids.

(iv) Sidewall channels, when used on pools up to twenty-five hundred square feet, which accept the total recirculation volume of the pool through the upper side of the pool if:

(A) Overall flow through the channel exceeds four times the treatment recirculation rate;

(B) Design of channel prevents entrapment of the user;

(C) Openings of any screens have less than one-half inch slots;

(D) Channel openings do not allow access beyond the pool, except with the use of specific tools requiring their opening;

(E) Open area of grates prevent a suction or entrapment hazard which could be dangerous to the user; and

(F) The channel provides an action pulling water from the top of the pool to remove floatable debris and oils.

(c) Main drains in all pools with:

(i) Location at the low points of the pool;

(ii) A minimum of two main drains spaced not further than twenty feet apart nor closer than six feet or spaced as far as possible from each other in pools less than six feet linear floor distance;

(iii) Total open area of grates preventing a suction or entrapment hazard which could be dangerous to user;

(iv) Flat grate drains having:

(A) Maximum flow of 1.5 feet per second; or

(B) Net area of outlet being at least four times the area of the discharge pipe.

(v) Maximum flow of four feet per second in anti-vortex drains;

(vi) Openings not allowing a sphere over one-half inch in diameter to pass;

(vii) Grate design to withstand forces of users;

(viii) Grates removable only with specific tools; and

(ix) Means to control flow from recirculation pump or balancing tank.

(9) Owners shall maintain recirculation flow which:

(a) Does not exceed six feet per second in suction or valved discharge side of pump; and

(b) Does not exceed ten feet per second in open discharge pipes on the pressure side of the pump or filter dis-

charge. This limit does not apply to the return inlet and the last two feet of pipe leading to the inlet.

(10) Owners shall provide a surge chamber or surge area in RWCFs with an entry pool to:

(a) Accommodate at least two minutes of the total turnover; and

(b) Maintain proper water levels for treatment and operation of the attraction.

(11) Owners having RWCFs with overflow channels requiring balancing tanks shall:

(a) Maintain volume equivalent to fifteen times maximum bathing load expressed in gallons; and

(b) Increase capacity as necessary to provide volume for make-up water and to prevent air lock in the pump suction line.

(12) Owners shall have and maintain recirculation pumps with adequate capacity to:

(a) Provide design flows and pressure for recirculation of the RWCF water over the entire operating pressure of the filter;

(b) Allow proper capacity for backwashing of filters when specified; and

(c) Have self-priming capability when installed above the pool water level.

(13) Where pumps precede the filter, owners shall install hair and lint strainers, which shall:

(a) Be located upstream of recirculation pumps;

(b) Be of corrosion-resistant material sufficiently strong to prevent collapse when clogged;

(c) Have an operable cover; and

(d) Provide valving to isolate the strainer when located below pool water level.

(14) Owners shall provide valves at appropriate locations to allow isolation and maintenance of equipment.

(15) Owners shall provide equipment rooms which:

(a) Enclose pumps, disinfection equipment, filters, and other electrical and mechanical equipment and associated chemicals;

(b) Provide adequate working space and access to perform routine operations;

(c) Provide lighting and ventilation of the equipment room; and

(d) Are not accessible to the public.

(16) Owners shall ensure the source of make-up water and associated piping in the RWCF:

(a) Provides sufficient quantity to replace daily losses from the pool;

(b) Comes from a supply conforming with chapter 246-290 WAC; and

(c) Prevents cross-connections using a minimum air gap of two pipe diameters or approved backflow prevention devices between the make-up water source and the RWCF attraction water or waste water.

(17) Owners shall equip RWCFs with filtration equipment which:

(a) Meets the applicable standards of NSF or equivalent;

(b) Uses acceptable types and filter rates described in Table 5 of this section:

TABLE 5
FILTER TYPES AND ACCEPTABLE RATES

Type of Filter	Range of Acceptable Filter Rate Expressed in gpm/sq. ft. Minimum		Maximum*
Sand			
Rapid & pressure	—		3
Pressure high rate	10		18
Vacuum high rate	10		18
DE	Continuous feed	Manual feed	
Vacuum	0.8	1.0	2.0
Pressure	1.0	1.35	2.0
Cartridge**			
Applied in temperature ranges:			
<95°F.	—		0.375
>95°F.	—		0.188

Note:

* Filters sized at maximum application rate shall use flow control valves.

** Cartridge filters shall have a nominal micron rating of twenty microns or less.

(c) Has pressure or vacuum gauges for measuring loss of head (pressure) through the filter with minimum of one gauge preceding and one gauge following the filter;

(d) Has a flow indicator to measure treatment turnover; and

(e) Has means of discharging filter backwash to waste with:

(i) Discharge in a manner not creating a public nuisance;

(ii) Disposal in accordance with applicable local law or regulation;

(iii) Minimum air gap of two pipe diameters to prevent cross-connection from waste discharge and recirculation system piping;

(iv) Discharge receptor and piping of sufficient size to accept backwash water and prevent flooding; and

(v) Provisions to monitor filter effluent during backwash.

(18) Owners shall provide disinfection equipment which:

(a) Provides a continuous and effective residual of disinfectant in the water;

(b) Uses a disinfectant with a residual that is easily monitored;

(c) Conforms with NSF standards when liquid or solid feed materials are used;

(d) Has a design feed rate which will provide effective disinfection levels when RWCFs are in use;

(e) Meets the following conditions if chlorine gas is used:

(i) Chlorine rooms shall:

(A) Be above ground level;

(B) Be constructed so all openings or partitions with adjoining rooms are sealed;

(C) Be located with consideration of prevailing winds to dissipate leaked chlorine away from the RWCF;

(D) Have door opening outward only and to the out-of-doors.

(ii) Mechanical exhaust ventilation of the chlorine room including:

(A) Air inlet located as far as possible from fan intake to promote good air circulation patterns;

(B) Minimum of one air change per minute in the chlorine room when fan is operating;

(C) A remote switch outside the room or a door-activated switch to turn on fan prior to entering;

(D) Suction for fan near the floor; and

(E) Exhaust for fan and chlorinator vent located to prevent contaminating air intakes or prevent undue hazard for the users of the RWCF.

(iii) Gas chlorine systems which:

(A) Are vacuum injection type, with vacuum actuated cylinder regulators; and

(B) Provide adequate-sized backflow and anti-siphon protection at the ejector.

(iv) Breathing protection available in an accessible area for the operator outside of the chlorine room including:

(A) Instructions about limitations with chlorine concentrations and concentrations of oxygen if chlorine-type canister masks are used; and

(B) Self-contained breathing apparatus designed for use in a chlorine atmosphere as preferred equipment for working with chlorine leaks.

(v) Means for automatic shutoff when the recirculation filter pump is off or flow to the pool is interrupted;

(vi) Chlorine gas cylinders shall:

(A) Be stored only in chlorine rooms; and

(B) Not exceed one hundred fifty pounds tare weight per cylinder; except, wave pools, where one-ton cylinders may be used. Only a single, one-ton cylinder shall be stored on the premise at any time.

(19) Owners applying chemicals other than disinfectant shall provide chemical feed equipment with:

(a) Adequate size and design to allow routine cleaning and maintenance;

(b) Materials resistant to action of the chemicals to be used; and

(c) Means for automatic shut off when the recirculation filter pump is off or flow to the pool is interrupted.

(20) Owners shall have testing equipment to provide means for measuring disinfectant residuals, pH, alkalinity, and any other chemicals used routinely in the RWCF water. In pools where compressed chlorine gas is used, means to detect leaks shall be provided, i.e., use of proper strength ammonia vapor.

(21) Owners shall provide easily accessible change room facilities at all RWCFs with:

(a) Dressing rooms, showers, toilets, urinals, and sinks;

(b) Change room design including:

(i) Separate facilities for both sexes;

(ii) Floors of a nonslip finish with suitable drains;

(iii) Junctions between walls and floors coved for ease of cleaning;

(iv) Adequate ventilation to prevent build-up of moisture in the facility; and

(v) Provisions to minimize cross traffic with nonusers.

(c) Plumbing fixtures as described in Table 6 of this section.

TABLE 6
MINIMUM PLUMBING FIXTURE REQUIREMENTS
BASED ON MAXIMUM PEAK PERIOD OCCUPANCY

			Number of Fixtures Required Per Occupancy Load	
	Type of Fixture	Occupancy/Sex	Male	Female
1.	Toilets	First 600	1/200	1/100
		Portion exceeding 600	1/450	1/300
2.	Urinals	First 600	1/200	-
		Portion exceeding 600	1/450	-
3.	Showers	First 300	1/100	1/100
		Portion exceeding 300	1/200	1/200
4.	Sinks	First 400	1/200	1/200
		Next 350	1/350	1/350
		Portion exceeding 750	1/500	1/500
5.	Hose bibs		1 accessible to change rooms	
6.	Janitor sink		1 within the RWCF	

(d) Showers:

(i) Delivering water at a temperature range between ninety and one hundred ten degrees Fahrenheit; and

(ii) Providing liquid or powdered soap in nonglass dispensers.

(e) Flush toilets and toilet tissue in dispensers;

(f) Sinks providing:

(i) Tempered or hot and cold running water,

(ii) Liquid or powdered soap in nonglass dispensers, and

(iii) Disposable towels or electric hand dryers.

(g) Sewage disposed of in a manner approved by the department or local health officer; and

(h) Hose bibs with vacuum breakers provided at convenient locations.

(22) Owners shall design and maintain lighting at RWCF attractions or change rooms to:

(a) Illuminate indoor attractions, outdoor attractions used after dusk, or change rooms with a minimum lighting intensity maintained thirty inches above any walking surface, pool deck, or pool area of:

(i) Thirty foot-candles at indoor facilities;

(ii) Fifteen foot-candles at outdoor facilities; or

(iii) Twenty foot-candles in change rooms.

(b) Allow lifeguards or attendants to clearly see every part of pool waters and walking surfaces; and

(c) Meet any additional lighting requirements deemed necessary by the department or local health officer.

(23) Owners shall provide first-aid facilities in every RWCF including:

(a) A twenty-four package first-aid kit per WAC 296-24-065;

(b) Two or more blankets reserved for emergency use;

(c) A telephone with a prominently displayed list of emergency medical service response numbers;

(d) A backboard meeting the specifications of the ARC; and

(e) Sufficient and suitable area to accommodate persons requiring treatment and necessary first-aid equipment.

(24) Owners shall provide signs at RWCF entrances and change rooms. Any combination of words, pictures, or symbols may be used to convey the following conditions:

(a) Prohibition of use by persons with communicable diseases;

(b) Prohibition of use by persons under the influence of alcohol or drugs;

(c) Requirement for a cleansing shower before entering the attractions;

(d) Warning that persons refusing to obey the attendants are subject to removal from the premises; and

(e) Prohibition of food and drink in pool, change room, or on walking surfaces.

(25) If owners allow or make provision for food service:

(a) Food and beverage sale and consumption areas shall be separate from pool, change room, and walking surfaces;

(b) Trash containers shall be provided; and

(c) No glass containers shall be allowed in the RWCF.

(26) Owners shall prevent users or spectators access to mechanical, electrical, or chemical equipment facilities.

(27) Owners shall provide an operable drinking fountain of the angle jet type design meeting the requirements of the American Standards Association.

[Statutory Authority: RCW 70.90.120. 92-02-020 (Order 226B), § 246-262-060, filed 12/23/91, effective 1/23/92. Statutory Authority: RCW 43.20.050. 91-02-051 (Order 124B), recodified as § 246-262-060, filed 12/27/90, effective 1/31/91. Statutory Authority: RCW 70.90.120. 88-13-125 (Order 311), § 248-97-070, filed 6/22/88.]

WAC 246-262-070 Specific design, construction, and equipment. (1) Owners shall provide specific design, construction, and equipment for the various types of RWCF attractions.

(2) Owners and manufacturers shall ensure adherence to recognized design and construction standards including, but not limited to:

(a) ASTM F-24 Standards on Amusement Rides and Devices;

(b) "Suggested Health and Safety Guidelines for Recreational Water Slide Flumes" U.S. Department of Health and Human Services, Centers for Disease Control, Atlanta, Georgia, 30333;

(c) "World Waterpark Association Considerations for Operating Safety" published by the World Waterpark Association, 7474 Village Drive, Prairie Village, Kansas, 66208; and

(d) Department recognized or approved guidelines, criteria, or standards.

(3) Owners shall ensure design and construction for water slides or tubes, inner-tube rides, kiddie flumes, or ramp slides meet the following minimum standards:

(a) Flume or tube entry access points shall have:

(i) Means to control unauthorized entrance;

(ii) Handrails or slip-resistant surfaces provided to assist users; and

(iii) Attendant stations which provide:

(A) User entry spacing control;

(B) Attendant line of sight to the attraction; and

(C) Attendant access to a communication system.

(b) Receiving pools shall have:

(i) Clearances and minimum distances as noted in Figure 3 of this section for tube or flume entrances into pools.

FIGURE 3
MINIMUM CLEARANCES FOR FLUME OR TUBE ENTRY TO RECEIVING POOLS

VALUE	MINIMUM DISTANCE	DESCRIPTION
A	5 feet	Minimum distance from edge of flume to side of pool.
B	6 feet	Minimum distance between sides of parallel flumes.
C	20 feet	Minimum distance between two flumes or tubes that are not parallel shall be so constructed so that the intersecting lines of each closest side does not intersect for a distance of at least twenty feet from the end of each flume.
D	20 feet	Minimum distance where flume terminates to opposite side of pool.

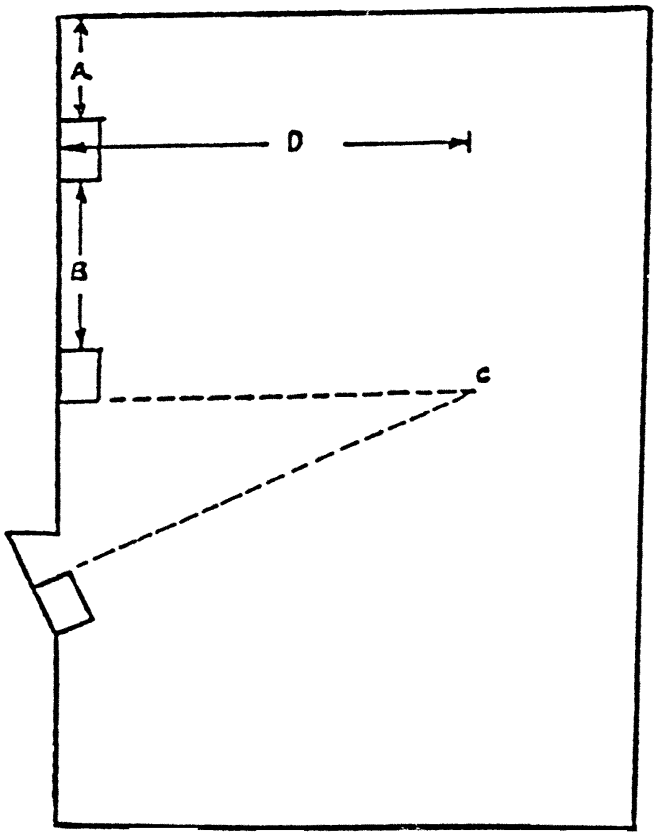

(ii) Flume or tube sliding surface ending below the pool operating water level when users ride unaided or on mats;

(iii) Flume or tube perpendicular for a minimum of ten feet to the wall of entry;

(iv) Handrails, when steps are provided for exiting; and

(v) Attendant and/or lifeguard stations with:

(A) Unobstructed access to users; and

(B) Ready access to communication system for contacting control station attendant and first-aid personnel.

(4) Owners shall design and construct barriers to prevent unauthorized entry or exit from any intermediate pool.

(5) Owners shall ensure design and construction of speed slides meet the following minimum standards:

(a) Entry points conforming with subsection (3)(a) of this section;

(b) Roller- or sled-type slides designed to prevent accidental flipping of the sleds or coasters when entering the water;

(c) Provision of sufficient transition zones for deceleration preventing unsafe user impact; and

(d) Maintenance of critical water operation levels providing proper braking action of the user.

(6) Owners shall ensure design and construction of wave pools meet the following minimum standards:

(a) Walls of wave pools shall be vertical with minimum six inch radius of curvature between wall and pool bottom;

(b) Pool bottom sloped:

(i) Not exceeding one foot of drop in twelve feet of run where pool depths range from zero to three and one-half feet; or

(ii) Not exceeding one foot of drop in nine feet of run where depths range from three and one-half feet to six and one-half feet.

(c) Recessed ladders or step holes with vertical grab bars at depths above three and one-half feet:

(i) For emergency exit only;

(ii) Spaced at intervals of fifty feet or less where pool water depths are greater than three and one-half feet. Pool water depths are measured without wave action.

(d) Deck width of at least ten feet along the shallow end;

(e) A fence or restrictive barrier a minimum of forty-two inches in height and at least two feet out from the pool/deck interface at the side walls of wave pools, with emergency exit openings.

(f) Lifeguard station locations appropriate to prevailing conditions;

(g) A push-button system to shut off the wave-making equipment with:

(i) Shut offs installed on sidewall decks and spaced at intervals no greater than one hundred feet, readily accessible to the lifeguards; and

(ii) Shock hazard protection.

(h) A communication system for use by authorized personnel which is clearly audible to all portions of the pool;

(i) A communication system for interaction between authorized personnel; and

(j) Maximum bathing load (users) not to exceed a value equal to S/12+ D/68 where:

(i) "S" equals surface area in square feet where depth is less than three and one-half feet;

(ii) "D" equals surface area in square feet where pool depth is three and one-half feet deep or greater; and

(iii) Pool depths are measured without wave action.

(7) If inner tubes, boogie boards, or surf boards are used, the owner shall ensure the design and operation of the wave pool provides for such activity, including:

(a) The establishment of rules for use;

(b) Operating and emergency procedures; and

(c) Crowd control.

(8) Owners shall ensure design and construction of any wading activity pool meets the following minimum standards. Wading activity pool areas are:

(a) Built with maximum water depth of two feet;

(b) Constructed with pool walls so that distance from deck to water level is six inches or less for at least seventy-five percent of the pool perimeter;

(c) Equipped with floors uniformly sloped to drain with a maximum slope of one foot of drop in twelve feet of run;

(d) Separated by at least a four foot high barrier when distance to any water area greater than four feet in depth is less than ten feet; and

(e) Protected from water areas greater than two feet by providing:

(i) A float line separating the two areas;

(ii) A six inch contrasting color line on pool bottom and side walls at float line; and

(iii) A transition zone with a maximum floor slope not exceeding one foot of drop in twelve feet of run.

(9) Owners shall ensure design and construction of drop slides or drop tubes meet the following minimum standards:

(a) Entry in accordance with subsection (3)(a) of this section;

(b) Receiving pool envelope:

(i) Conforming to CNCA standards noted in WAC 246-262-060 (5)(c)(vi)(A) if the point of exit is less than one-half meter (or twenty inches);

(ii) Conforming to FINA standards noted in WAC 246-262-060 (5)(c)(vi)(B) if the point of exit is one-half meter (or twenty inches) or greater.

(iii) Increasing in size to ensure user safety if warranted by angle of entry or speed of the user.

(c) Sufficient distance between slides or tubes to prevent collisions of users. Parallel exits are recommended.

(d) Direct line of sight and direct communication between entry access point and receiving pool.

(10) Owners shall provide signs for specific RWCF attractions. Words, pictures, or symbols may be used to convey the following as appropriate:

(a) Prohibition of running, standing, kneeling, tumbling, horseplay, or stopping in the flumes or tubes;

(b) Failure to follow directions of attendant or failure to obey posted rules may result in removal from the RWCF;

(c) Prohibition of diving from flume;

(d) Prohibition of multiple user chains if applicable to ride;

(e) Requirement to leave the landing area promptly after exiting;

(f) Recommended minimum or maximum age or height for using this attraction; and

(g) Prohibition of head first sliding if applicable to ride.

(h) Additional information on wave pools including:

(i) Warning that wave pools can be very tiring;

(ii) Warning for small children and poor swimmers to use personal flotation devices in designated areas;

(iii) Requirement for adult supervision for children;

(iv) Prohibition of diving, jumping, or entering from sides of pool; and

(v) Prohibition of using surf boards during periods of general public use.

(11) If the proposed attraction design is not addressed by or exceeds limitations of standards and guidelines specified by this section, owners shall submit:

(a) Justification to the department or local health officer prepared by an engineer; and

(b) Information on the construction, maintenance, and operation of the proposed attraction.

[Statutory Authority: RCW 70.90.120. 92-02-020 (Order 226B), § 246-262-070, filed 12/23/91, effective 1/23/92. Statutory Authority: RCW 43.20.050. 91-02-051 (Order 124B), recodified as § 246-262-070, filed 12/27/90, effective 1/31/91. Statutory Authority: RCW 70.90.120. 88-13-125 (Order 311), § 248-97-080, filed 6/22/88.]

WAC 246-262-080 Operation. (1) Owners shall ensure proper operation to protect the public health and safety of the users and the water quality of the RWCF.

(2) Owners shall prepare and use an operations manual for the RWCF.

(3) Owners shall routinely inspect, maintain, and repair the physical components to:

(a) Ensure all structural facilities are intact and free from corrosion, wear, or stress;

(b) Prevent water ponding on walking surfaces;

(c) Ensure equipment is available and operable including:

(i) Disinfection, filtration, and related equipment;

(ii) Lifesaving equipment; and

(iii) Communication systems.

(4) Owners shall ensure user health and safety by adequately staffing the RWCF during operation. Staffing shall include:

(a) Advanced first-aid personnel at all times facility is open to the public;

(b) Lifeguards and/or attendants as appropriate at all times facility is open to the public; and

(c) Water treatment operator as needed.

(5) Owners shall ensure each type of personnel performs the following duties:

(a) Advanced first-aid personnel shall provide emergency medical treatment;

(b) Lifeguard shall have sole responsibility for guarding users in area assigned;

(c) Attendants shall have sole responsibility for assuring proper user control in areas assigned; and

(d) Water treatment operator shall oversee water treatment operations and conduct necessary water quality monitoring.

(6) Owners shall ensure each type of personnel meets the designated training requirements:

(a) Advanced first-aid personnel with:

(i) A current advanced first-aid certification or equivalent or higher levels of training including:

(A) First responder;

(B) Emergency medical technician; or

(C) Paramedic.

(ii) Training on management of spinal injuries in the aquatic environment if lifeguards with lifeguard training are not at the RWCF.

(b) Lifeguards with a current lifeguard certificate through any of the recognized programs in the definition (WAC 246-262-010(23));

(c) Attendants with training determined appropriate by the owner to respond to user safety needs at the attractions, and:

(i) Attendants stationed at shallow pool facilities (less than four feet water depth) with documented training regarding their response in at least the following:

(A) Safety instruction on basic methods of water rescue, reaching, and extension assists;

(B) Cardiopulmonary resuscitation (CPR) and airway management;

(C) Basic bleeding control;

(D) Basic fracture management; and

(E) Specific instruction on management of spinal injuries related to the aquatic environment.

(ii) Attendants stationed at entry access areas with basic training including:

(A) Controlling and supervising users in areas where attendant is responsible;

(B) Controlling timing of user entry rate where appropriate;

(C) Use of communication systems; and

(D) Knowledge of CPR by at least one attendant on duty.

(d) Water treatment operators knowledgeable in pool water chemistry, filters, and pumping equipment; and

(e) When gas chlorine is used, the manager or the operator with specific training in:

(i) Proper operation and maintenance procedures of the chlorination equipment;

(ii) Physical and chemical properties of chlorine gas under pressure;

(iii) Use of emergency safety equipment; and

(iv) Proper first-aid procedures and response for accidental inhalation of chlorine gas and leaks.

(7) Owners shall ensure adequate emergency response with:

(a) Lifeguards (and attendants where appropriate) located to provide a response time not to exceed thirty seconds to all users in pools;

(b) Backup lifeguard (or attendant where appropriate) provisions so response time is maintained during multiple rescues;

(c) Lifeguards at all pools. Attendants may substitute for lifeguards at pools less than four feet in depth which:

(i) Are strictly used as receiving pools for attractions where users leave the pool immediately after entering; or

(ii) Are strictly used for wading activity; and

(iii) Attendants meet the training requirements specified in subsection (6)(c)(i) of this section.

(d) Provisions for emergency response drills to meet the response time and actions noted in WAC 246-262-080 including:

(i) Drills at least twice each operating season; and

(ii) Documentation of testing.

(8) Owners shall regulate activities of users and spectators including:

(a) Requirement to obey RWCF rules related to health and safety; and

(b) Warning that failure to comply with rules constitutes grounds for exclusion from the premises or management action as necessary.

(9) Owners shall ensure RWCF user control in specific attractions by requiring:

(a) On speed slides, completion of the ride by one user before allowing another user to enter;

(b) On ramp slides, clearing of the slide by one group prior to second group entering; and

(c) On drop slide or tube, clearing of the pool entry area prior to allowing another user to enter.

(10) Owners shall monitor various environmental conditions which affect facility safety. Weather conditions, including electrical storms, fog, wind, sun glare creating visibility problems, and other such factors shall be evaluated. Appropriate action shall be taken in response to these factors to ensure user safety.

[Statutory Authority: RCW 70.90.120. 92-02-020 (Order 226B), § 246-262-080, filed 12/23/91, effective 1/23/92. Statutory Authority: RCW 43.20.050. 91-02-051 (Order 124B), recodified as § 246-262-080, filed 12/27/90, effective 1/31/91. Statutory Authority: RCW 70.90.120. 88-13-125 (Order 311), § 248-97-090, filed 6/22/88.]

WAC 246-262-090 Monitoring, reporting, and recordkeeping. (1) Owners shall:

(a) Provide information requested by the department or local health officer for statewide injury and illness surveillance reports; and

(b) Notify the department or local health officer within forty-eight hours of any drowning, near drowning, death, or serious injury or illness occurring at the RWCF.

(2) Owners shall monitor and maintain records on the following for at least three years:

(a) Water quality conditions including:

(i) Testing for residual disinfectant concentration three or more different periods daily, except once a day if electronic monitoring and control equipment is provided;

(ii) Hydrogen ion (pH) concentration tested daily;

(iii) Alkalinity monitored at least weekly;

(iv) Any other chemical added to water including alum, algicides, cyanurate compounds, acid, and alkalinity compounds, etc.;

(v) Pressure or vacuum gauge readings; and

(vi) Any gross contamination to the water (i.e., vomiting, feces, etc.).

(b) Routine preventive maintenance provided on all hazardous equipment, e.g., gas chlorination equipment;

(c) Number of users of the facility; and

(d) Credentials, training, and/or certifications required for personnel per WAC 246-262-080 of this chapter.

(3) Owners shall notify the department in the event an incident occurs with a chemical creating a problem of health or safety significance (e.g., chlorine gas leak).

(4) Owners shall make records available for department review upon request.

[Statutory Authority: RCW 70.90.120. 92-02-020 (Order 226B), § 246-262-090, filed 12/23/91, effective 1/23/92. Statutory Authority: RCW 43.20.050. 91-02-051 (Order 124B), recodified as § 246-262-090, filed 12/27/90, effective 1/31/91. Statutory Authority: RCW 70.90.120. 88-13-125 (Order 311), § 248-97-100, filed 6/22/88.]

WAC 246-262-100 Inspection. (1) Owners shall permit the department or local health officer to perform on-site inspections as necessary in the discretion of the enforcing agency to ensure compliance with standards in chapter 70.90 RCW and chapter 246-262 WAC.

(2) Employees of the enforcing agency shall provide appropriate identification when entering for purpose of routine inspections.

[Statutory Authority: RCW 70.90.120. 92-02-020 (Order 226B), § 246-262-100, filed 12/23/91, effective 1/23/92. Statutory Authority: RCW 43.20.050. 91-02-051 (Order 124B), recodified as § 246-262-100, filed 12/27/90, effective 1/31/91. Statutory Authority: RCW 70.90.120. 88-13-125 (Order 311), § 248-97-110, filed 6/22/88.]

WAC 246-262-110 Advisory committee. The RWCF advisory committee shall:

(1) Perform functions as specified in accordance with RCW 70.90.130;

(2) Meet at least one time each year;

(3) Be composed of representatives as specified in RCW 70.90.130 appointed to staggered two-year terms, the representative from the department shall not be subject to these conditions;

(4) Select a chairperson every two years;

(5) Establish department representative as ongoing secretary of the advisory committee; and

(6) Present an annual report to the board summarizing committee activities.

[Statutory Authority: RCW 43.20.050. 91-02-051 (Order 124B), recodified as § 246-262-110, filed 12/27/90, effective 1/31/91. Statutory Authority: RCW 70.90.120. 88-13-125 (Order 311), § 248-97-120, filed 6/22/88.]

WAC 246-262-120 Enforcement. (1) The department or, if enforcement responsibility has been assigned under a joint plan of operation, the local health officer:

(a) Shall enforce the rules of chapter 246-262 WAC; or

(b) May refer cases within their jurisdiction to the local prosecutor's office or office of the attorney general, as appropriate.

(2) When a RWCF is in violation of provisions of chapter 70.90 RCW or the rules of chapter 246-262 WAC, appropriate enforcement action may be initiated by the department, local health officer, local prosecutor's office, or office of the attorney general. Enforcement actions may include any one or a combination of the following:

(a) Informal administrative conferences, convened at the request of the department, local health officer, or owner, to explore facts and resolve problems;

(b) Orders directed to the owner and/or operator of the RWCF and/or the person causing or responsible for the violation of the rules of chapter 246-262 WAC;

(c) Imposition of civil penalties of up to five hundred dollars per violation per day as authorized under RCW 70.90.200;

(d) Denial, suspension, or revocation of operating permits; and

(e) Civil or criminal action initiated by the local prosecutor's office or by the office of the attorney general.

(3) Orders authorized under this section include, but are not limited to, the following:

(a) Orders requiring corrective measures necessary to effect compliance with chapter 246-262 WAC or chapter 70.90 RCW. Such orders may or may not include a compliance schedule; and

(b) Orders to stop work and/or refrain from using any RWCF or portion thereof or improvement thereto until all permits, certifications, and approvals required by statute or rule are obtained.

(4) An order issued under this section shall:

(a) Be in writing;

(b) Name the facility and the person or persons to whom the order is directed;

(c) Briefly describe each action or inaction constituting a violation of chapter 70.90 RCW or the rules of chapter 246-262 WAC;

(d) Specify any required corrective action or forbearance together with a schedule for completing such corrective action, if applicable;

(e) Provide notice, as appropriate, that continued or repeated violation may subject the violator to:

(i) Civil penalties of up to five hundred dollars;

(ii) Denial, suspension, or revocation of the facilities operating permit; or

(iii) Referral to the office of the county prosecutor or attorney general.

(f) Provide the name, business address, and phone number of an appropriate staff person who may be contacted in regard to an order.

(5) Service of an order shall be made:

(a) Personally, unless otherwise provided by law; or

(b) By certified mail return receipt requested.

(6) Under such rules or policies as the department or local health officer may adopt, civil penalties of up to five hundred dollars per violation per day may be assessed against any person violating the provisions of chapter 70.90 RCW or chapter 246-262 WAC.

(7) The department or local health officer shall have cause to deny the application or reapplication for an operating permit or to revoke or suspend a required operating permit of any person who has:

(a) Previously had:

(i) An operating permit suspended or revoked; or

(ii) An application for an operating permit denied for any reason whether in this state or any other state.

(b) Failed or refused to comply with the provisions of chapter 70.90 RCW, chapter 246-262 WAC, or any other statutory provision or rule regulating the construction or operation of a RWCF; or

(c) Obtained or attempted to obtain an operating permit or any other required certificate or approval by fraudulent means or misrepresentation.

(8) For the purposes of subsection (7) of this section, a person shall be defined to include:

(a) Applicant;

(b) Reapplicant;

(c) Permit holder; or

(d) Any individual associated with subsection (8)(a), (b), or (c) of this section including, but not limited to:

(i) Board members,

(ii) Officers,

(iii) Managers,

(iv) Partners,

(v) Association members,

(vi) Employees,

(vii) Agents, and in addition

(viii) Third persons acting with the knowledge of such persons.

(9) The department or local health officer may summarily suspend an operating permit, other required permit, license, or certification without a prior hearing if the department or local health officer:

(a) Finds that public health, safety, or welfare imperatively requires emergency action; and

(b) Incorporates a finding to that effect in its notice or order.

[Statutory Authority: RCW 70.90.120. 92-02-020 (Order 226B), § 246-262-120, filed 12/23/91, effective 1/23/92. Statutory Authority: RCW 43.20.050. 91-02-051 (Order 124B), recodified as § 246-262-120, filed 12/27/90, effective 1/31/91. Statutory Authority: Chapter 34.05 RCW and RCW 70.90.120. 90-06-049 (Order 040), § 248-97-130, filed 3/2/90, effective 3/2/90. Statutory Authority: RCW 70.90.120. 88-13-125 (Order 311), § 248-97-130, filed 6/22/88.]

WAC 246-262-130 Notice of decision—Adjudicative proceeding. (1) A hearing requested to contest a local health officer's action shall be governed by the local health jurisdiction's rules for hearings.

(2)(a) The department's notice of a denial, suspension, modification, or revocation of a license shall be consistent with section 377, chapter 3, Laws of 1991. An applicant or license holder has the right to an adjudicative proceeding to contest the decision.

(b) A department notice of imposition of a civil fine shall be consistent with section 378, chapter 3, Laws of 1991. A person the department imposes a civil fine on has the right to an adjudicative proceeding to contest the decision.

(c) A license applicant or holder or a person the department imposes a fine on contesting a department decision shall within twenty-eight days of receipt of the decision:

(i) File a written application for an adjudicative proceeding by a method showing proof of receipt with the Administrative Hearings Unit, Department of Health, 1300 Quince Street, S.E., Mailstop: EY-17, Olympia, WA 98504; and

(ii) Include in or with the application:

(A) A specific statement of the issue or issues and law involved;

(B) The grounds for contesting the department decision; and

(C) A copy of the contested department decision.

(d) The proceeding is governed by the Administrative Procedure Act (chapter 34.05 RCW), this chapter, and chapter 246-08 WAC. If a provision in this chapter conflicts with chapter 246-08 WAC, the provision in this chapter governs.

[Statutory Authority: RCW 70.90.120. 92-02-020 (Order 226B), § 246-262-130, filed 12/23/91, effective 1/23/92. Statutory Authority: RCW 43.20.050. 91-02-051 (Order 124B), recodified as § 246-262-130, filed 12/27/90, effective 1/31/91. Statutory Authority: Chapter 34.05 RCW and RCW 70.90.120. 90-06-049 (Order 040), § 248-97-135, filed 3/2/90, effective 3/2/90.]

WAC 246-262-140 Insurance. (1) As a condition of obtaining and maintaining a valid operating permit, owners shall provide evidence of having liability insurance.

(2) The minimum amount of liability insurance required shall be one hundred thousand dollars combined single limit. The coverage for this insurance shall include:

(a) Bodily injury or death of one or more persons in any one incident from the use of the RWCF.

(b) Tail coverage shall be required twenty-four months beyond the insured period on a "claims made" form of insurance.

(3) A certificate of insurance shall be provided to the department or local health officer at the time of application

for operating permit subject to the approval of the risk manager of the state of Washington.

(4) The liability insurance company shall provide the department or local health officer a thirty-day prior notice of cancellation, alteration, or nonrenewal. This condition shall be stated in the certificate.

(5) If the owner's insurance is cancelled, the operating permit is void and the owner shall cease operation of the RWCF until required insurance is obtained and a valid operating permit is reinstated by the department or local health officer.

[Statutory Authority: RCW 43.20.050. 91-02-051 (Order 124B), recodified as § 246-262-140, filed 12/27/90, effective 1/31/91. Statutory Authority: RCW 70.90.120. 88-13-125 (Order 311), § 248-97-140, filed 6/22/88.]

WAC 246-262-150 Compliance. Existing RWCFs not complying with the design, construction, and equipment requirements outlined in WAC 246-202-060 and 246-262-070 of these regulations may continue in use, provided the facility is operated in continuous compliance of the safety, sanitation, and water quality provisions of chapter 246-292 WAC as outlined in WAC 246-262-050, 246-262-080, 246-262-090, and 246-262-140.

[Statutory Authority: RCW 70.90.120. 92-02-020 (Order 226B), § 246-262-150, filed 12/23/91, effective 1/23/92. Statutory Authority: RCW 43.20.050. 91-02-051 (Order 124B), recodified as § 246-262-150, filed 12/27/90, effective 1/31/91. Statutory Authority: RCW 70.90.120. 88-13-125 (Order 311), § 248-97-150, filed 6/22/88.]

WAC 246-262-160 Variance. The board may grant a variance from requirements of chapter 246-262 WAC if, in the sole discretion of the board, data and/or research provides sufficient evidence that the RWCF (attraction, device, equipment, procedure, etc.), will adequately protect public health and safety, as well as water quality.

[Statutory Authority: RCW 70.90.120. 92-02-020 (Order 226B), § 246-262-160, filed 12/23/91, effective 1/23/92. Statutory Authority: RCW 43.20.050. 91-02-051 (Order 124B), recodified as § 246-262-160, filed 12/27/90, effective 1/31/91. Statutory Authority: RCW 70.90.120. 88-13-125 (Order 311), § 248-97-160, filed 6/22/88.]

WAC 246-262-170 Innovations—Substitutions. The board authorizes the department:

(1) To review new innovations, and if accepted for use, prepare appropriate amendments to chapter 246-262 WAC.

(2) To allow substitution of equipment, facilities, or procedures required by chapter 246-262 WAC when, in the sole discretion of the department, data and/or research provide sufficient evidence that such substitution is equivalent to the requirement and will adequately provide for the protection of the public health and safety of persons using the RWCF.

[Statutory Authority: RCW 70.90.120. 92-02-020 (Order 226B), § 246-262-170, filed 12/23/91, effective 1/23/92. Statutory Authority: RCW 43.20.050. 91-02-051 (Order 124B), recodified as § 246-262-170, filed 12/27/90, effective 1/31/91. Statutory Authority: RCW 70.90.120. 88-13-125 (Order 311), § 248-97-170, filed 6/22/88.]

WAC 246-262-990 Fees. (1) The fee for plan review of a new recreational water contact facility shall be four hundred dollars base fee plus an hourly rate of ninety-nine dollars for all hours of review beyond four hours plus the safety engineer reviewer's cost as billed.

(a) The base fee must be provided to the department prior to initiating plan review.

(b) Hourly fees for plan review will be charged regardless of whether the plans are approved or not.

(c) The construction permit will not be issued until after full payment is received.

(2) The fee for review of plans for alterations or modifications of an existing recreational water contact facility shall be the hourly rate of ninety-nine dollars.

(3) The annual fee for an operating permit for a recreational water contact facility containing one attraction shall be one hundred eighty dollars.

(4) The annual fee for an operating permit for a recreational water contact facility containing more than one attraction shall be one hundred eighty dollars for the first attraction plus fifty-one dollars for each additional attraction up to a maximum fee of three hundred thirty-five dollars.

(5) The department may charge an additional fee of fifty-one dollars plus associated laboratory costs for inspections beyond those provided under the annual operating permit when necessary due to violations of such items as:

(a) Noncompliance with water quality standards; and

(b) Failure to comply with operational requirements for health and safety.

[Statutory Authority: RCW 70.90.150. 06-16-120, § 246-262-990, filed 8/1/06, effective 9/1/06. Statutory Authority: RCW 70.90.150 and 43.20B.-250. 03-14-146, § 246-262-990, filed 7/2/03, effective 8/2/03. Statutory Authority: RCW 43.70.040. 91-02-050 (Order 122), § 246-262-990, filed 12/27/90, effective 1/31/91.]

Chapter 246-270 WAC

SEWER SYSTEMS—CERTIFICATION OF NECESSITY FOR WATER DISTRICT INVOLVEMENT

WAC

246-270-001	Purpose.
246-270-010	Definitions.
246-270-020	Application content.
246-270-030	Notification of interested parties.
246-270-040	Criteria for necessity.
246-270-050	Notice of decision—Adjudicative proceeding.
246-270-060	Limitation of an approval and a certification of necessity.
246-270-990	Fees.

WAC 246-270-001 Purpose. This regulation prescribes the procedure whereby a water district organized under the provisions of chapter 57.04 RCW may apply for and receive an approval and a certification of necessity from the department in accordance with the provisions of RCW 57.08.065 in order to exercise powers of a sewer district in accordance with the provisions of Title 56 RCW, as now, or hereafter amended. Additionally, this regulation will define the criteria which the department will consider in determining the eligibility of an applicant water district for an approval and a certification of necessity.

[Statutory Authority: RCW 43.20.050. 91-02-051 (Order 124B), recodified as § 246-270-001, filed 12/27/90, effective 1/31/91; Order 6, § 248-91-020, filed 10/16/68; Emergency Order 3, § 248-91-020, filed 8/2/68.]

WAC 246-270-010 Definitions. For purposes of this chapter, the following definitions are applicable:

(1) "Approval and a certification of necessity" shall mean an order of the department which gives approval to a water district to establish, maintain, construct and operate a sewer system in a proposed service area in accordance with RCW 57.08.065.

(2) "Board" shall mean the Washington state board of health.

(3) "Department" shall mean the Washington state department of health.

(4) "Drainage basin" shall mean a geographic area drained by a surface stream or body of impounded water together with all tributary surface streams and bodies of impounded surface water.

(5) "Industrial wastes" shall mean the liquids, solids, or other wastes resulting from any process of industry, or from the development of any natural resource.

(6) "Necessity" shall mean a reasonable need and not mean an indispensable need.

(7) "Proposed service area" shall mean the area proposed to be served with a sewer system by the applicant water district.

(8) "Sewage" shall mean the water-carried waste products or discharge from human beings or other wastes from residences, public or private buildings, or industrial plants, together with such ground, surface or storm waters as may be present.

(9) "Sewer entities" shall mean any municipal or public corporations which by law are entitled to construct and operate a sewer system.

(10) "Sewer system" shall mean a system of sewers and appurtenances for the collection, transportation, treatment and disposal of sewage and industrial wastes.

[Statutory Authority: RCW 43.70.040 and 57.08.065. 92-02-018 (Order 224), § 246-270-010, filed 12/23/91, effective 1/23/92. Statutory Authority: RCW 43.20.050. 91-02-051 (Order 124B), recodified as § 246-270-010, filed 12/27/90, effective 1/31/91; Order 6, § 248-91-010, filed 10/16/68; Emergency Order 3, § 248-91-010, filed 8/2/68.]

WAC 246-270-020 Application content. An application for an approval and a certification of necessity must be presented to the department and shall include, but not be limited to, the following considerations:

(1) A general statement of the present and future sewage problems in the proposed area of service.

(2) A consideration of the relationship of the district to contiguous, nearby or overlapping sewer entities.

(3) Service areas considering reasonable drainage basin oriented planning.

(4) Population forecasts as a basis of sewer system design in the proposed service area.

(5) A layout map showing major trunk lines and interceptor lines including the drainage area to be served within and outside of the boundaries of the water district.

(6) The methods of interception and disposal of sewage.

(7) The projected completion time for the sewer system.

(8) An affidavit signed by an officer of the applicant water district, stating that all persons, parties or entities have been given the notice required by WAC 246-270-030.

(9) A summary setting forth the reasons why the applicant water district is better suited to provide a sewer system within the proposed service area than a contiguous or adjacent sewer entity.

[Statutory Authority: RCW 43.70.040 and 57.08.065. 92-02-018 (Order 224), § 246-270-020, filed 12/23/91, effective 1/23/92. Statutory Authority: RCW 43.20.050. 91-02-051 (Order 124B), recodified as § 246-270-020, filed 12/27/90, effective 1/31/91; Order 6, § 248-91-030, filed 10/16/68; Emergency Order 3, § 248-91-030, filed 8/2/68.]

WAC 246-270-030 Notification of interested parties. Prior to the submission of an application to the department for an approval and a certification of necessity, an applicant water district shall:

(1) Notify all the contiguous and affected sewer entities in the area in which the water district is proposing to construct and operate a sewer system that the applicant water district will submit an application for an approval and a certification of necessity, and that the department will consider all written comments and objections submitted to the department from any contiguous and affected sewer entity if the same written comments and objections are received by the department before a date which will be specified by the department.

(2) Notify the county commissioners, county health officer, county engineer, county planning commission and the county boundary review board, if any, in the county of the proposed service area, that the applicant water district will submit an application for an approval and certification of necessity and the department will consider all written comments and objections submitted to the department by any of the same if the written comments and objections are received by the department before a date which will be specified by the department.

(3) The dates for inclusion in the notification provided for in paragraphs (1) and (2) hereof will be furnished by the department upon the request of any applicant water district to the department.

[Statutory Authority: RCW 43.20.050. 91-02-051 (Order 124B), recodified as § 246-270-030, filed 12/27/90, effective 1/31/91; Order 6, § 248-91-040, filed 10/16/68; Emergency Order 3, § 248-91-040, filed 8/2/68.]

WAC 246-270-040 Criteria for necessity. The department will issue an approval and a certification of necessity to an applicant water district if all of the following conditions are satisfied:

(1) The granting of an approval and a certification of necessity will eliminate or alleviate an existing or imminent health problem as determined by the department.

(2) A sewer system does not exist in a substantial portion of the proposed service area and no regularly constituted and established sewer entity intends to construct and operate a sewer system in a substantial portion of the proposed service area within the reasonably foreseeable future.

(3) The proposed service area conforms to any or all established sewage drainage basins designated pursuant to RCW 90.48.270.

(4) The proposed service area conforms to any or all established comprehensive plans for sewage drainage basins, established pursuant to RCW 90.48.280.

[Statutory Authority: RCW 43.20.050. 91-02-051 (Order 124B), recodified as § 246-270-040, filed 12/27/90, effective 1/31/91; Order 6, § 248-91-050, filed 10/16/68; Emergency Order 3, § 248-91-050, filed 8/2/68.]

WAC 246-270-050 Notice of decision—Adjudicative proceeding. (1) The department's notice of a denial, suspension, modification, or revocation of an approval and certificate of necessity shall be consistent with RCW 43.70.115. An applicant or certificate holder has the right to an adjudicative proceeding to contest the decision.

(2) A certificate applicant or holder contesting a department certificate decision shall within twenty-eight days of receipt of the decision:

(a) File a written application for an adjudicative proceeding by a method showing proof of receipt with the Administrative Hearings Unit, Department of Health, 1300 Quince Street S.E., P.O. Box 47851, Olympia, WA 98504-7851; and

(b) Include in or with the application:

(i) A specific statement of the issue or issues and law involved;

(ii) The grounds for contesting the department decision; and

(iii) A copy of the contested department decision.

(3) The proceeding is governed by the Administrative Procedure Act (chapter 34.05 RCW), this chapter, and chapter 246-08 WAC. If a provision in this chapter conflicts with chapter 246-08 WAC, the provision in this chapter governs.

[Statutory Authority: RCW 43.70.040, 34.05.220 and 57.08.065. 92-02-018 (Order 224), § 246-270-050, filed 12/23/91, effective 1/23/92. Statutory Authority: RCW 43.20.050. 91-02-051 (Order 124B), recodified as § 246-270-050, filed 12/27/90, effective 1/31/91. Statutory Authority: Chapter 34.05 RCW, RCW 34.05.220 (1)(a) and 1st ex.s. c 9 § 106. 90-06-019 (Order 039), § 248-91-060, filed 2/28/90, effective 3/1/90; Order 6, § 248-91-060, filed 10/16/68; Emergency Order 3, § 248-91-060, filed 8/2/68.]

WAC 246-270-060 Limitation of an approval and a certification of necessity. The granting of an approval and a certification of necessity by the department shall only constitute approval to establish, maintain, construct, and operate a sewer system within the proposed service area requested in the initial application for an approval and a certification of necessity, and shall in no way constitute approval or authority to establish, maintain, construct and operate a sewer system in any area which may be annexed at some future time by the applicant water district.

The granting of an approval and a certification of necessity by the department does not constitute approval of the engineering report or plans and specifications of any sewer system, and all plans and specifications and the proposed method of operation and maintenance for any sewer system must be approved by the department pursuant to WAC 246-271-050.

[Statutory Authority: RCW 43.70.040 and 57.08.065. 92-02-018 (Order 224), § 246-270-060, filed 12/23/91, effective 1/23/92. Statutory Authority: RCW 43.20.050. 91-02-051 (Order 124B), recodified as § 246-270-060, filed 12/27/90, effective 1/31/91; Order 6, § 248-91-070, filed 10/16/68.]

WAC 246-270-990 Fees. The minimum fee for required written approval and certification of necessity shall be two hundred dollars. If review time exceeds four hours, fifty dollars for each additional hour or part of an hour shall be added to the minimum fee.

[Statutory Authority: RCW 43.70.040. 91-02-050 (Order 122), § 246-270-990, filed 12/27/90, effective 1/31/91.]

Chapter 246-271 WAC
PUBLIC SEWAGE

WAC

246-271-010	Definitions.
246-271-020	Prohibited methods of sewage disposal.
246-271-030	Investigative and order powers of secretary.
246-271-040	Plans for sewage systems.
246-271-050	Plans for sewage treatment works.
246-271-060	Plans for sewage treatment works—Requirements for engineers.
246-271-090	Operation of sewage treatment plants—Disinfection.
246-271-100	Irrigation with sewage.
246-271-110	Use of sewage sludge for fertilizer.
246-271-120	Adoption of appendix details as rules.
246-271-130	Appendix—Definitions.
246-271-140	Appendix—Report—Sewage system.
246-271-150	Appendix—General layout map.
246-271-160	Appendix—Plot plan.
246-271-170	Appendix—Engineering report—Sewage treatment works.
246-271-180	Appendix—Preliminary report, industrial waste treatment works.
246-271-990	Fees.

DISPOSITION OF SECTIONS FORMERLY CODIFIED IN THIS CHAPTER

246-271-070	Operation of sewage treatment plants—Efficiency. [Statutory Authority: RCW 43.20.050. 92-02-019 (Order 225B), § 246-271-070, filed 12/23/91, effective 1/23/92; 91-02-051 (Order 124B), recodified as § 246-271-070, filed 12/27/90, effective 1/31/91; Regulation .92.060, effective 3/11/60.] Repealed by 97-20-100, filed 9/29/97, effective 10/30/97. Statutory Authority: RCW 43.20.050.
246-271-080	Operation of sewage treatment plants—Freedom from sand and silt. [Statutory Authority: RCW 43.20.050. 92-02-019 (Order 225B), § 246-271-080, filed 12/23/91, effective 1/23/92; 91-02-051 (Order 124B), recodified as § 246-271-080, filed 12/27/90, effective 1/31/91; Regulation .92.070, effective 3/11/60.] Repealed by 97-20-100, filed 9/29/97, effective 10/30/97. Statutory Authority: RCW 43.20.050.

WAC 246-271-010 Definitions. For the purpose of these rules and regulations, the terms shall have the meaning as defined in the appendix.

[Statutory Authority: RCW 43.20.050. 91-02-051 (Order 124B), recodified as § 246-271-010, filed 12/27/90, effective 1/31/91; Regulation .92.001, effective 3/11/60.]

WAC 246-271-020 Prohibited methods of sewage disposal. No sewage or industrial waste, or components thereof, shall be placed or permitted to be placed, or permitted to flow onto the surface of the ground, or into any waters of the state in any manner determined by the secretary to be prejudicially affecting a domestic water supply, or otherwise endangering the health and well-being of the people of the state.

[Statutory Authority: RCW 43.20.050. 92-02-019 (Order 225B), § 246-271-020, filed 12/23/91, effective 1/23/92; 91-02-051 (Order 124B), recodified as § 246-271-020, filed 12/27/90, effective 1/31/91; Regulation .92.010, effective 3/11/60.]

WAC 246-271-030 Investigative and order powers of secretary. The secretary shall investigate the methods of sewage and industrial waste disposal and if such may endanger a domestic water supply, or in any other way endanger the health or well-being of the people of the state, the secretary shall issue and enforce such orders as may be necessary to correct the condition.

[Statutory Authority: RCW 43.20.050. 92-02-019 (Order 225B), § 246-271-030, filed 12/23/91, effective 1/23/92; 91-02-051 (Order 124B), recodified as § 246-271-030, filed 12/27/90, effective 1/31/91; Regulation .92.020, effective 3/11/60.]

WAC 246-271-040 Plans for sewage systems. Report, general layout map and specifications - Every owner or authorized representative shall make a comprehensive study of the proposed sewage system and prepare and submit to the department a copy of a report, a general layout map and general construction specifications of the proposed public sewage system. Written approval of this report, general layout map and general construction specifications shall be obtained from the department before any further construction, alterations or additions are made to the system or, in case of a new system, before such system is constructed except as provided in subsection (1) of this section. After such approval has been received the owner shall not be required to submit any further plans and specifications for any part of the sewage system covered by the general layout map except as required by subsections (2), (3), and (4) of this section, but the owner shall notify the department of any portion of the system to be constructed and indicate its position on the approved general layout map. (The specifications may be submitted at the time of notification of construction.) The report and general layout map shall include but not be limited to the items listed under those headings in the appendix.

(1) In lieu of an approved report, general layout map, and specifications, any owner or authorized representative shall submit a copy of a report, a plot plan, and specifications of each new sewage system or alterations or additions to any existing sewage system and receive written approval before construction is started. The report and plot plan shall include but not be limited to those items listed in the appendix.

(2) Whether or not a report and general layout map have been approved, if the system does not include adequate sewage treatment works as determined by the department, written approval for the construction of each addition or alteration of the sewage system must be obtained from the department before construction is started.

(3) In case an addition is to be made to a sewage system and this addition is not a part of an approved general layout map, the owner shall submit a copy of a revised general layout map or a plot plan of the area to the department and receive written approval before construction is started.

(4) Every owner shall submit a set of detailed plans and specifications of all overflow or bypass structures, pipe outlets and pumping stations with overflow structures, showing the quantities of flow for which they are designed and shall receive written approval from the department before construction is started.

[Statutory Authority: RCW 43.20.050. 92-02-019 (Order 225B), § 246-271-040, filed 12/23/91, effective 1/23/92; 91-02-051 (Order 124B), recodified as § 246-271-040, filed 12/27/90, effective 1/31/91; Regulation .92.030, effective 3/11/60.]

WAC 246-271-050 Plans for sewage treatment works. Engineering report of sewage treatment works - Before detailed plans and specifications for new sewage treatment works or major extensions, alterations or improvements to existing sewage treatment works are prepared, every owner or authorized agent shall submit one copy of a preliminary engineering report to the department and receive written approval. This report shall include the items listed under "scope of the engineering report" in the appendix.

[Statutory Authority: RCW 43.20.050. 92-02-019 (Order 225B), § 246-271-050, filed 12/23/91, effective 1/23/92; 91-02-051 (Order 124B), recodified as § 246-271-050, filed 12/27/90, effective 1/31/91; Order 72, § 248-92-040, filed 4/11/72; Regulation .92.040, effective 3/11/60.]

WAC 246-271-060 Plans for sewage treatment works—Requirements for engineers. All plans for new sewage treatment plants, major changes or additions to existing systems or plants shall be prepared under the supervision of a professional engineer licensed in accordance with chapter 283, Laws of 1947 (chapter 18.43 RCW). All copies of plans submitted to the department for review shall bear the seal of the professional engineer under whose supervision they have been prepared.

[Statutory Authority: RCW 43.20.050. 92-02-019 (Order 225B), § 246-271-060, filed 12/23/91, effective 1/23/92; 91-02-051 (Order 124B), recodified as § 246-271-060, filed 12/27/90, effective 1/31/91; Regulation .92.050, effective 3/11/60.]

WAC 246-271-090 Operation of sewage treatment plants—Disinfection. Effective disinfection of sewage discharges shall be provided in accordance with the determination of the department. If at any time effective disinfection cannot be accomplished due to the breakdown of equipment or the need for bypassing raw or partially treated sewage, or any other reason, the owner shall immediately notify the department by telephone or by facsimile machine.

[Statutory Authority: RCW 43.20.050. 92-02-019 (Order 225B), § 246-271-090, filed 12/23/91, effective 1/23/92; 91-02-051 (Order 124B), recodified as § 246-271-090, filed 12/27/90, effective 1/31/91; Regulation .92.080, effective 3/11/60.]

WAC 246-271-100 Irrigation with sewage. Raw sewage, or treatment plant effluent, shall not be used for irrigation, except under conditions as may be prescribed by the department.

[Statutory Authority: RCW 43.20.050. 92-02-019 (Order 225B), § 246-271-100, filed 12/23/91, effective 1/23/92; 91-02-051 (Order 124B), recodified as § 246-271-100, filed 12/27/90, effective 1/31/91; Regulation .92.090, effective 3/11/60.]

WAC 246-271-110 Use of sewage sludge for fertilizer. The use of sewage sludge for fertilizing material shall be in compliance with the limitations and procedures as may be prescribed by the department; and the owner shall notify the department of any intended use of sludge as a fertilizing material.

[Statutory Authority: RCW 43.20.050. 92-02-019 (Order 225B), § 246-271-110, filed 12/23/91, effective 1/23/92; 91-02-051 (Order 124B), recodified as § 246-271-110, filed 12/27/90, effective 1/31/91; Regulation .92.100, effective 3/11/60.]

WAC 246-271-120 Adoption of appendix details as rules. This appendix contains details referred to in the rules and regulations and is adopted as a part of these rules and regulations.

[Statutory Authority: RCW 43.20.050. 91-02-051 (Order 124B), recodified as § 246-271-120, filed 12/27/90, effective 1/31/91; Appendix to Public Sewage Rules, effective 3/11/60.]

WAC 246-271-130 Appendix—Definitions. (1) "Department" - Washington state department of health.

(2) "Detailed plans" of sewage systems - Plans used for the construction of any sewer or sewer system.

(3) "Final plans" of sewage treatment works - Plans used for the construction of any sewage treatment works.

(4) "Industrial wastes" - The liquids, solids, or other wastes resulting from any process of industry, or from the development of any natural resource.

(5) "Industrial waste treatment works" - An arrangement of devices and structures for treating industrial wastes.

(6) "Owner" - The state, county, city, town, village, corporation, firm, company, institution, person or persons owning or operating any sewage system, sewage treatment plant, or industrial waste disposal system or treatment plant.

(7) "Pipe outlet" - A pipe line which conveys the effluent from a reservoir, sewage treatment plant, or other structure to its point of discharge.

(8) "Pumping station" - A station housing sewage pumps, and their appurtenances.

(9) "Secretary" - Secretary of the Washington state department of health or the secretary's authorized designee.

(10) "Sewage" - The water-carried waste products or discharge from human beings or other wastes from residences, public or private buildings, together with such ground, surface or storm water as may be present.

(11) "Sewage system" - A system of sewers and appurtenances for the collection, transportation, and pumping of sewage and industrial wastes.

(12) "Sewage treatment works" - An arrangement of devices and structures for treating sewage, industrial wastes, and sludge. Sometimes used as synonymous with sewage treatment plant.

(13) "Sewage works" - A comprehensive term which includes facilities for collecting, pumping, treating, and disposing of sewage; the sewage system and the sewage treatment works.

(14) "Sewer" - A pipe or conduit; generally closed, but normally not flowing full, for carrying sewage and other waste liquids.

(15) "Sewer outlet" - The point of final discharge of sewage or treatment plant effluent.

[Statutory Authority: RCW 43.20.050. 92-02-019 (Order 225B), § 246-271-130, filed 12/23/91, effective 1/23/92; 91-02-051 (Order 124B), recodified as § 246-271-130, filed 12/27/90, effective 1/31/91; Public Sewage Appendix, effective 3/11/60.]

WAC 246-271-140 Appendix—Report—Sewage system. The "report" shall include: -

(1) A description of the nature and extent of the area included in the present system (if any) and the area and extent to which plans provide sewage works for future development.

(2) The population trend and an estimate of future population to be served.

(3) A statement regarding the present and expected future quantity and character of sewage, including any industrial wastes which may be present or expected in the sewage system.

(4) A discussion of limitations placed on infiltration and the infiltration problem.

(5) A statement regarding provisions for treatment.

[Statutory Authority: RCW 43.20.050. 92-02-019 (Order 225B), § 246-271-140, filed 12/23/91, effective 1/23/92; 91-02-051 (Order 124B), recodified as § 246-271-140, filed 12/27/90, effective 1/31/91; Public Sewage Appendix, effective 3/11/60.]

WAC 246-271-150 Appendix—General layout map. The general layout map shall include the following items:

(1) **Boundaries** - The boundary lines of the municipality or sewer district to be sewered.

(2) **Existing sewers** - The location, size and direction of flow of all existing sanitary or combined trunk sewers and the boundaries of the areas served by each.

(3) **Proposed sewers** - The location, size and direction of flow of all proposed trunk sewers and the boundaries of the areas to be served by each.

(4) **Existing and proposed pump stations** - Location of all existing and proposed pumping stations designated to distinguish between those existing and proposed.

(5) **Topography and elevations** - Topography showing pertinent ground elevations and including existing and proposed streets, if such information is available.

(6) **Streams, lakes and other bodies of water** - The location and direction of flow of major streams and the high and low elevations of all water surfaces at sewer outlets and overflows.

(7) **Public water supplies** - The location of wells or other sources of public water supply, water storage reservoirs, and other structures of public health significance.

[Statutory Authority: RCW 43.20.050. 91-02-051 (Order 124B), recodified as § 246-271-150, filed 12/27/90, effective 1/31/91; Public Sewage Appendix, effective 3/11/60.]

WAC 246-271-160 Appendix—Plot plan. The plot plan shall include: -

(1) **Boundaries** - The boundary lines of the area involved.

(2) **Sewer lines** - All sewer lines and their tie-in with the existing system.

(3) **Other data** - Elevations, slopes, pipe sizes, and manhole spacings.

(4) **Public water supplies** - The location of wells or other sources of public water supply, water storage reservoirs, and other structures of public health significance.

[Statutory Authority: RCW 43.20.050. 91-02-051 (Order 124B), recodified as § 246-271-160, filed 12/27/90, effective 1/31/91; Public Sewage Appendix, effective 3/11/60.]

WAC 246-271-170 Appendix—Engineering report—Sewage treatment works. The engineering report for the sewage treatment works shall include the following items together with any other relevant data -

(1) The purpose and need for the proposed project.

(2) The nature and extent of the area included in the present system and the area and extent to which plans provide sewage works for future development. If the area to be served by existing and proposed sewers does not include the entire municipality, sewer district, or natural drainage area, give a brief description of that portion not included, together with information as to the probability of future development, and the method by which this area can be served by treatment works.

(3) The population trend as indicated by available records, and give the estimated future population for the design period. Describe briefly the method used to determine future population trends.

(4) Any existing sewage treatment works as they are related to the proposed project.

(5) Discuss the location of water supply and distribution structures as they relate to the various portions of the proposed sewage works.

(6) The considerations given to possibility of garbage disposal in sewage works.

(7) List of all establishments producing appreciable quantities of industrial wastes and the quantity, production periods, and character of industrial wastes in so far as they may affect the sewerage system or sewage treatment works. Consideration shall be given to future industrial expansion.

(8) The degree of treatment proposed based upon the size, usage and character of the receiving body of water and upon the amount and strength of sewage or waste to be treated and other influencing factors.

(9) The type or types of treatment process proposed based upon the character of sewage or waste to be handled and the degree of treatment required.

(10) Data on the volume and strength of sewage and the design data regarding flow and strength.

(11) The ratio of interception in connection with existing combined sewers, and the quantity expected to be bypassed during storms.

(12) The basic design data of each unit of the treatment works.

(13) Provision for future needs.

(14) Discussion of the various sites available and the advantages of the one recommended. The proximity of residences or developed areas to any treatment works. The relationship of maximum high water to the plant site and various plant units.

(15) Expected efficiencies of each unit and the entire plant, and the character of effluent expected.

(16) A flow diagram showing general layout of various units.

[Statutory Authority: RCW 43.20.050. 91-02-051 (Order 124B), recodified as § 246-271-170, filed 12/27/90, effective 1/31/91; Public Sewage Appendix, effective 3/11/60.]

WAC 246-271-180 Appendix—Preliminary report, industrial waste treatment works. The preliminary report on industrial waste disposal or treatment facilities shall include the following items where pertinent -

(1) Type of industry.

(2) Kind and quantity of finished products.

(3) The amount of process waste and its sources.

(4) The quantity of unpolluted water, such as cooling water, etc., and the provision for segregation for separate discharge.

(5) Description of the waste, including if possible a chemical analysis.

(6) The amount and kind of chemicals used in the process, if any.

(7) The basic design data of the treatment units.

(8) All necessary maps and layout sketches, including any flow diagrams.

(9) Results to be expected from the treatment process.

(10) All data necessary to indicate the location of the outlet pipe and method of diffusing the waste into the receiving water.

(11) If any domestic sewage is to be disposed of through the system, a brief description in compliance with the provisions of WAC 246-271-030 should be included.

[Statutory Authority: RCW 43.20.050. 92-02-019 (Order 225B), § 246-271-180, filed 12/23/91, effective 1/23/92; 91-02-051 (Order 124B), recodified as § 246-271-180, filed 12/27/90, effective 1/31/91; Public Sewage Appendix, effective 3/11/60.]

WAC 246-271-990 Fees. (1) The minimum fee for required review of land application of municipal wastewater shall be two hundred dollars. If review time exceeds four hours, fifty dollars for each additional hour or part of an hour shall be added to the minimum fee.

(2) The minimum fee for required review of comprehensive sewer plans shall be two hundred dollars. If review time exceeds four hours, fifty dollars for each additional hour or part of an hour shall be added to the minimum fee.

[Statutory Authority: RCW 43.70.040. 91-02-050 (Order 122), § 246-271-990, filed 12/27/90, effective 1/31/91.]

Chapter 246-272 WAC
ON-SITE SEWAGE SYSTEMS

WAC

246-272-990 Fees.

DISPOSITION OF SECTIONS FORMERLY CODIFIED IN THIS CHAPTER

246-272-001 Authority. [Statutory Authority: RCW 43.20.050. 91-02-051 (Order 124B), recodified as § 246-272-001, filed 12/27/90, effective 1/31/91; 83-13-014 (Order 259), § 248-96-010, filed 6/3/83; Order 101, § 248-96-010, filed 6/10/74.] Repealed by 94-09-025, filed 4/15/94, effective 1/1/95. Statutory Authority: RCW 43.20.050.

246-272-00101 Purpose, objectives, and authority. [Statutory Authority: RCW 43.20.050. 94-09-025, § 246-272-00101, filed 4/15/94, effective 1/1/95.] Repealed by 05-15-119, filed 7/18/05, effective 7/1/07. Statutory Authority: RCW 43.20.050. Later promulgation, see chapter 246-272A WAC.

246-272-002 Purpose and objectives. [Statutory Authority: RCW 43.20.050. 91-02-051 (Order 124B), recodified as § 246-272-002, filed 12/27/90, effective 1/31/91; 83-13-014 (Order 259), § 248-96-011, filed 6/3/83; Order 101, § 248-96-011, filed 6/10/74.] Repealed by 94-09-025, filed 4/15/94, effective 1/1/95. Statutory Authority: RCW 43.20.050.

246-272-005 Administration. [Statutory Authority: RCW 43.20.050. 91-02-051 (Order 124B), recodified as § 246-272-005, filed 12/27/90, effective 1/31/91; 83-13-014 (Order 259), § 248-96-018, filed 6/3/83; Order 101, § 248-96-018, filed 6/10/74.] Repealed by 94-09-025, filed 4/15/94, effective 1/1/95. Statutory Authority: RCW 43.20.050.

246-272-00501 Administration. [Statutory Authority: RCW 43.20.050. 94-09-025, § 246-272-00501, filed 4/15/94, effective 1/1/95.] Repealed by 05-15-119, filed 7/18/05, effective 7/1/07. Statutory Authority: RCW 43.20.050. Later promulgation, see chapter 246-272A WAC.

246-272-010 Definitions. [Statutory Authority: RCW 43.20.050. 92-02-019 (Order 225B), § 246-272-010, filed 12/23/91, effective 1/23/92; 91-02-051 (Order 124B), recodified as § 246-272-010, filed 12/27/90, effective 1/31/91. Statutory Authority: 1989 c 349. 89-21-026 (Order 332), § 248-96-020, filed 10/10/89, effective 11/10/89. Statutory Authority: RCW 43.20.050. 83-13-014 (Order 259), § 248-96-020, filed 6/3/83; 81-05-028 (Order 208), § 248-96-020, filed 2/18/81; 80-04-038

(Order 196), § 248-96-020, filed 3/20/80; Order 101, § 248-96-020, filed 6/10/74.] Repealed by 94-09-025, filed 4/15/94, effective 1/1/95. Statutory Authority: RCW 43.20.050.

246-272-01001 Definitions. [Statutory Authority: RCW 43.20.050. 94-09-025, § 246-272-01001, filed 4/15/94, effective 1/1/95.] Repealed by 05-15-119, filed 7/18/05, effective 7/1/07. Statutory Authority: RCW 43.20.050. Later promulgation, see chapter 246-272A WAC.

246-272-020 Local regulation. [Statutory Authority: RCW 43.20.-050. 92-02-019 (Order 225B), § 246-272-020, filed 12/23/91, effective 1/23/92; 91-02-051 (Order 124B), recodified as § 246-272-020, filed 12/27/90, effective 1/31/91; 83-13-014 (Order 259), § 248-96-025, filed 6/3/83.] Repealed by 94-09-025, filed 4/15/94, effective 1/1/95. Statutory Authority: RCW 43.20.050.

246-272-02001 Local regulation. [Statutory Authority: RCW 43.20.-050. 94-09-025, § 246-272-02001, filed 4/15/94, effective 1/1/95.] Repealed by 05-15-119, filed 7/18/05, effective 9/15/05. Statutory Authority: RCW 43.20.-050. Later promulgation, see chapter 246-272A WAC.

246-272-030 Applicability. [Statutory Authority: RCW 43.20.050. 92-02-019 (Order 225B), § 246-272-030, filed 12/23/91, effective 1/23/92; 91-02-051 (Order 124B), recodified as § 246-272-030, filed 12/27/90, effective 1/31/91. Statutory Authority: 1989 c 349. 89-21-026 (Order 332), § 248-96-040, filed 10/10/89, effective 11/10/89. Statutory Authority: RCW 43.20.050. 83-13-014 (Order 259), § 248-96-040, filed 6/3/83; 80-04-038 (Order 196), § 248-96-040, filed 3/20/80; Order 101, § 248-96-040, filed 6/10/74.] Repealed by 94-09-025, filed 4/15/94, effective 1/1/95. Statutory Authority: RCW 43.20.050.

246-272-03001 Applicability. [Statutory Authority: RCW 43.20.050. 94-09-025, § 246-272-03001, filed 4/15/94, effective 1/1/95.] Repealed by 05-15-119, filed 7/18/05, effective 9/15/05. Statutory Authority: RCW 43.20.050. Later promulgation, see chapter 246-272A WAC.

246-272-040 Alternative systems. [Statutory Authority: RCW 43.20.050. 91-02-051 (Order 124B), recodified as § 246-272-040, filed 12/27/90, effective 1/31/91. Statutory Authority: 1989 c 349. 89-21-026 (Order 332), § 248-96-046, filed 10/10/89, effective 11/10/89. Statutory Authority: RCW 43.20.050. 83-13-014 (Order 259), § 248-96-046, filed 6/3/83; Order 101, § 248-96-046, filed 6/10/74.] Repealed by 94-09-025, filed 4/15/94, effective 1/1/95. Statutory Authority: RCW 43.20.050.

246-272-04001 Alternative systems and proprietary devices. [Statutory Authority: RCW 43.20.050. 94-09-025, § 246-272-04001, filed 4/15/94, effective 1/1/95.] Repealed by 05-15-119, filed 7/18/05, effective 9/15/05. Statutory Authority: RCW 43.20.050. Later promulgation, see chapter 246-272A WAC.

246-272-050 Experimental systems. [Statutory Authority: RCW 43.20.050. 91-02-051 (Order 124B), recodified as § 246-272-050, filed 12/27/90, effective 1/31/91; 83-13-014 (Order 259), § 248-96-047, filed 6/3/83.] Repealed by 94-09-025, filed 4/15/94, effective 1/1/95. Statutory Authority: RCW 43.20.050.

246-272-05001 Experimental systems. [Statutory Authority: RCW 43.20.050. 94-09-025, § 246-272-05001, filed 4/15/94, effective 1/1/95.] Repealed by 05-15-119, filed 7/18/05, effective 9/15/05. Statutory Authority: RCW 43.20.050. Later promulgation, see chapter 246-272A WAC.

246-272-060 No surface discharge. [Statutory Authority: RCW 43.20.050. 92-02-019 (Order 225B), § 246-272-060, filed 12/23/91, effective 1/23/92; 91-02-051 (Order 124B), recodified as § 246-272-060, filed 12/27/90, effective 1/31/91; 83-13-014 (Order 259), § 248-96-050, filed 6/3/83; Order 101, § 248-96-050, filed 6/10/74.] Repealed by 94-09-025, filed 4/15/94, effective 1/1/95. Statutory Authority: RCW 43.20.050.

246-272-070 Connection to public sewer system. [Statutory Authority: RCW 43.20.050. 91-02-051 (Order 124B), recodified as § 246-272-070, filed 12/27/90, effective 1/31/91. Statutory Authority: 1989 c 349. 89-21-026 (Order 332), § 248-96-060, filed 10/10/89, effective 11/10/89. Statutory Authority: RCW 43.20.050. 83-13-014 (Order 259), § 248-96-060, filed 6/3/83; Order 101, § 248-96-060, filed 6/10/74.] Repealed by 94-09-025, filed 4/15/94, effective 1/1/95. Statutory Authority: RCW 43.20.050.

246-272-07001 Connection to public sewer system. [Statutory Authority: RCW 43.20.050. 94-09-025, § 246-272-07001, filed 4/15/94, effective 1/1/95.] Repealed by 05-15-119, filed 7/18/05, effective 9/15/05. Statutory Authority: RCW 43.20.050. Later promulgation, see chapter 246-272A WAC.

246-272-080 Larger on-site sewage systems. [Statutory Authority: RCW 43.20.050. 92-02-019 (Order 225B), § 246-272-080, filed 12/23/91, effective 1/23/92; 91-02-051 (Order 124B), recodified as § 246-272-080, filed 12/27/90, effective 1/31/91; 83-13-014 (Order 259), § 248-96-075, filed 6/3/83; 80-04-038 (Order 196), § 248-96-075, filed 3/20/80; Order 101, § 248-96-075, filed 6/10/74.] Repealed by 94-09-025, filed 4/15/94, effective 1/1/95. Statutory Authority: RCW 43.20.050.

246-272-08001 Large on-site sewage systems (LOSS). [Statutory Authority: RCW 43.20.050. 94-09-025, § 246-272-08001, filed 4/15/94, effective 1/1/95.] Repealed by 05-15-119, filed 7/18/05, effective 9/15/05. Statutory Authority: RCW 43.20.050. Later promulgation, see chapter 246-272A WAC.

246-272-090 Permit. [Statutory Authority: RCW 43.20.050. 91-02-051 (Order 124B), recodified as § 246-272-090, filed 12/27/90, effective 1/31/91; 83-13-014 (Order 259), § 248-96-080, filed 6/3/83; 80-04-038 (Order 196), § 248-96-080, filed 3/20/80; Order 101, § 248-96-080, filed 6/10/74.] Repealed by 94-09-025, filed 4/15/94, effective 1/1/95. Statutory Authority: RCW 43.20.050.

246-272-09001 Permits for OSS under three thousand five hundred gallons per day. [Statutory Authority: RCW 43.20.050. 94-09-025, § 246-272-09001, filed 4/15/94, effective 1/1/95.] Repealed by 05-15-119, filed 7/18/05, effective 7/1/07. Statutory Authority: RCW 43.20.050. Later promulgation, see chapter 246-272A WAC.

246-272-09501 Location. [Statutory Authority: RCW 43.20.050. 94-09-025, § 246-272-09501, filed 4/15/94, effective 1/1/95.] Repealed by 05-15-119, filed 7/18/05, effective 7/1/07. Statutory Authority: RCW 43.20.050. Later promulgation, see chapter 246-272A WAC.

246-272-100 Minimum land area requirement. [Statutory Authority: RCW 43.20.050. 92-02-019 (Order 225B), § 246-272-100, filed 12/23/91, effective 1/23/92; 91-02-051 (Order 124B), recodified as § 246-272-100, filed 12/27/90, effective 1/31/91; 83-13-014 (Order 259), § 248-96-090, filed 6/3/83; Order 101, § 248-96-090, filed 6/10/74.] Repealed by 94-09-025, filed 4/15/94, effective 1/1/95. Statutory Authority: RCW 43.20.050.

246-272-110 Determination of site characteristics. [Statutory Authority: RCW 43.20.050. 92-02-019 (Order 225B), § 246-272-110, filed 12/23/91, effective 1/23/92; 91-02-051 (Order 124B), recodified as § 246-272-110, filed 12/27/90, effective 1/31/91; 83-13-014 (Order 259), § 248-96-094, filed 6/3/83.] Repealed by 94-09-025, filed 4/15/94, effective 1/1/95. Statutory Authority: RCW 43.20.050.

246-272-11001 Soil and site evaluation. [Statutory Authority: RCW 43.20.050. 94-09-025, § 246-272-11001, filed 4/15/94, effective 1/1/95.] Repealed by 05-15-119, filed 7/18/05, effective 7/1/07. Statutory Authority: RCW 43.20.050. Later promulgation, see chapter 246-272A WAC.

246-272-11501 Design. [Statutory Authority: RCW 43.20.050. 94-09-025, § 246-272-11501, filed 4/15/94, effective 1/1/95.] Repealed by 05-15-119, filed 7/18/05, effective 7/1/07. Statutory Authority: RCW 43.20.050. Later promulgation, see chapter 246-272A WAC.

246-272-120 Subdivision and individual site review. [Statutory Authority: RCW 43.20.050. 92-02-019 (Order 225B), § 246-272-120, filed 12/23/91, effective 1/23/92; 91-02-051 (Order 124B), recodified as § 246-272-120, filed 12/27/90, effective 1/31/91; 83-13-014 (Order 259), § 248-96-095, filed 6/3/83; Order 101, § 248-96-095, filed 6/10/74.] Repealed by 94-09-025, filed 4/15/94, effective 1/1/95. Statutory Authority: RCW 43.20.050.

246-272-12501 Holding tank sewage systems. [Statutory Authority: RCW 43.20.050. 94-09-025, § 246-272-12501, filed 4/15/94, effective 1/1/95.] Repealed by 05-15-119, filed 7/18/05, effective 7/1/07. Statutory Authority: RCW 43.20.050. Later promulgation, see chapter 246-272A WAC.

246-272-130 Larger tract requirements. [Statutory Authority: RCW 43.20.050. 92-02-019 (Order 225B), § 246-272-130, filed 12/23/91, effective 1/23/92; 91-02-051 (Order 124B), recodified as § 246-272-130, filed 12/27/90, effective 1/31/91; 83-13-014 (Order 259), § 248-96-

096, filed 6/3/83; Order 101, § 248-96-096, filed 6/10/74.] Repealed by 94-09-025, filed 4/15/94, effective 1/1/95. Statutory Authority: RCW 43.20.050.

246-272-13501 Installation. [Statutory Authority: RCW 43.20.050. 94-09-025, § 246-272-13501, filed 4/15/94, effective 1/1/95.] Repealed by 05-15-119, filed 7/18/05, effective 7/1/07. Statutory Authority: RCW 43.20.050. Later promulgation, see chapter 246-272A WAC.

246-272-140 Location. [Statutory Authority: RCW 43.20.050. 91-02-051 (Order 124B), recodified as § 246-272-140, filed 12/27/90, effective 1/31/91; 83-13-014 (Order 259), § 248-96-100, filed 6/3/83; Order 101, § 248-96-100, filed 6/10/74.] Repealed by 94-09-025, filed 4/15/94, effective 1/1/95. Statutory Authority: RCW 43.20.050.

246-272-14501 Inspection. [Statutory Authority: RCW 43.20.050. 94-09-025, § 246-272-14501, filed 4/15/94, effective 1/1/95.] Repealed by 05-15-119, filed 7/18/05, effective 7/1/07. Statutory Authority: RCW 43.20.050. Later promulgation, see chapter 246-272A WAC.

246-272-150 Design. [Statutory Authority: RCW 43.20.050. 92-02-019 (Order 225B), § 246-272-150, filed 12/23/91, effective 1/23/92; 91-02-051 (Order 124B), recodified as § 246-272-150, filed 12/27/90, effective 1/31/91. Statutory Authority: 1989 c 349. 89-21-026 (Order 332), § 248-96-110, filed 10/10/89, effective 11/10/89. Statutory Authority: RCW 43.20.050. 83-13-014 (Order 259), § 248-96-110, filed 6/3/83; Order 101, § 248-96-110, filed 6/10/74.] Repealed by 94-09-025, filed 4/15/94, effective 1/1/95. Statutory Authority: RCW 43.20.050.

246-272-15501 Operation and maintenance. [Statutory Authority: RCW 43.20.050. 94-09-025, § 246-272-15501, filed 4/15/94, effective 1/1/95.] Repealed by 05-15-119, filed 7/18/05, effective 7/1/07. Statutory Authority: RCW 43.20.050. Later promulgation, see chapter 246-272A WAC.

246-272-160 Repair of failures along marine shorelines. [Statutory Authority: RCW 43.20.050. 92-02-019 (Order 225B), § 246-272-160, filed 12/23/91, effective 1/23/92; 91-02-051 (Order 124B), recodified as § 246-272-160, filed 12/27/90, effective 1/31/91. Statutory Authority: 1989 c 349. 89-21-026 (Order 332), § 248-96-120, filed 10/10/89, effective 11/10/89.] Repealed by 94-09-025, filed 4/15/94, effective 1/1/95. Statutory Authority: RCW 43.20.050.

246-272-16501 Repair of failures. [Statutory Authority: RCW 43.20.050. 94-09-025, § 246-272-16501, filed 4/15/94, effective 1/1/95.] Repealed by 05-15-119, filed 7/18/05, effective 7/1/07. Statutory Authority: RCW 43.20.050. Later promulgation, see chapter 246-272A WAC.

246-272-170 Marine expansions. [Statutory Authority: RCW 43.20.050. 92-02-019 (Order 225B), § 246-272-170, filed 12/23/91, effective 1/23/92; 91-02-051 (Order 124B), recodified as § 246-272-170, filed 12/27/90, effective 1/31/91. Statutory Authority: 1989 c 349. 89-21-026 (Order 332), § 248-96-125, filed 10/10/89, effective 11/10/89.] Repealed by 94-09-025, filed 4/15/94, effective 1/1/95. Statutory Authority: RCW 43.20.050.

246-272-17501 Expansions. [Statutory Authority: RCW 43.20.050. 94-09-025, § 246-272-17501, filed 4/15/94, effective 1/1/95.] Repealed by 05-15-119, filed 7/18/05, effective 7/1/07. Statutory Authority: RCW 43.20.050. Later promulgation, see chapter 246-272A WAC.

246-272-180 Designer program. [Statutory Authority: RCW 43.20.050. 91-02-051 (Order 124B), recodified as § 246-272-180, filed 12/27/90, effective 1/31/91; 83-13-014 (Order 259), § 248-96-130, filed 6/3/83; Order 101, § 248-96-130, filed 6/10/74.] Repealed by 94-09-025, filed 4/15/94, effective 1/1/95. Statutory Authority: RCW 43.20.050.

246-272-18501 Abandonment. [Statutory Authority: RCW 43.20.050. 94-09-025, § 246-272-18501, filed 4/15/94, effective 1/1/95.] Repealed by 05-15-119, filed 7/18/05, effective 7/1/07. Statutory Authority: RCW 43.20.050. Later promulgation, see chapter 246-272A WAC.

246-272-190 Inspection. [Statutory Authority: RCW 43.20.050. 92-02-019 (Order 225B), § 246-272-190, filed 12/23/91, effective 1/23/92; 91-02-051 (Order 124B), recodified as § 246-272-190, filed 12/27/90, effective 1/31/91; 83-13-014 (Order 259), § 248-96-140, filed 6/3/83; Order 101, § 248-96-140, filed 6/10/74.] Repealed by 94-09-025, filed 4/15/94, effective 1/1/95. Statutory Authority: RCW 43.20.050.

246-272-19501 Septage management. [Statutory Authority: RCW 43.20.050. 94-09-025, § 246-272-19501, filed 4/15/94, effective 1/1/95.] Repealed by 05-15-119, filed 7/18/05, effective 7/1/07. Statutory Authority: RCW 43.20.050. Later promulgation, see chapter 246-272A WAC.

246-272-200 Appeals. [Statutory Authority: RCW 43.20.050. 91-02-051 (Order 124B), recodified as § 246-272-200, filed 12/27/90, effective 1/31/91; 83-13-014 (Order 259), § 248-96-150, filed 6/3/83.] Repealed by 94-09-025, filed 4/15/94, effective 1/1/95. Statutory Authority: RCW 43.20.050.

246-272-20501 Developments, subdivisions, and minimum land area requirements. [Statutory Authority: RCW 43.20.050. 94-09-025, § 246-272-20501, filed 4/15/94, effective 1/1/95.] Repealed by 05-15-119, filed 7/18/05, effective 7/1/07. Statutory Authority: RCW 43.20.050. Later promulgation, see chapter 246-272A WAC.

246-272-210 Waiver of state regulations. [Statutory Authority: RCW 43.20.050. 91-02-051 (Order 124B), recodified as § 246-272-210, filed 12/27/90, effective 1/31/91; 83-13-014 (Order 259), § 248-96-160, filed 6/3/83; Order 101, § 248-96-160, filed 6/10/74.] Repealed by 94-09-025, filed 4/15/94, effective 1/1/95. Statutory Authority: RCW 43.20.050.

246-272-21501 Areas of special concern. [Statutory Authority: RCW 43.20.050. 94-09-025, § 246-272-21501, filed 4/15/94, effective 1/1/95.] Repealed by 05-15-119, filed 7/18/05, effective 9/15/05. Statutory Authority: RCW 43.20.-050. Later promulgation, see chapter 246-272A WAC.

246-272-220 Disposal of septic tank waste. [Statutory Authority: RCW 43.20.050. 91-02-051 (Order 124B), recodified as § 246-272-220, filed 12/27/90, effective 1/31/91; Order 101, § 248-96-170, filed 6/10/74.] Repealed by 94-09-025, filed 4/15/94, effective 1/1/95. Statutory Authority: RCW 43.20.050.

246-272-22501 Certification of designers, installers, pumpers, inspectors, and maintenance personnel. [Statutory Authority: RCW 43.20.050. 94-09-025, § 246-272-22501, filed 4/15/94, effective 1/1/95.] Repealed by 05-15-119, filed 7/18/05, effective 7/1/07. Statutory Authority: RCW 43.20.050. Later promulgation, see chapter 246-272A WAC.

246-272-230 Installer requirements. [Statutory Authority: RCW 43.20.050. 91-02-051 (Order 124B), recodified as § 246-272-230, filed 12/27/90, effective 1/31/91; 83-13-014 (Order 259), § 248-96-175, filed 6/3/83; Order 101, § 248-96-175, filed 6/10/74.] Repealed by 94-09-025, filed 4/15/94, effective 1/1/95. Statutory Authority: RCW 43.20.050.

246-272-23501 Technical review committee. [Statutory Authority: RCW 43.20.050. 94-09-025, § 246-272-23501, filed 4/15/94, effective 1/1/95.] Repealed by 05-15-119, filed 7/18/05, effective 9/15/05. Statutory Authority: RCW 43.20.050. Later promulgation, see chapter 246-272A WAC.

246-272-240 State advisory committee. [Statutory Authority: RCW 43.20.050. 91-02-051 (Order 124B), recodified as § 246-272-240, filed 12/27/90, effective 1/31/91; 83-13-014 (Order 259), § 248-96-180, filed 6/3/83; Order 101, § 248-96-180, filed 6/10/74.] Repealed by 94-09-025, filed 4/15/94, effective 1/1/95. Statutory Authority: RCW 43.20.050.

246-272-24001 State advisory committee. [Statutory Authority: RCW 43.20.050. 94-09-025, § 246-272-24001, filed 4/15/94, effective 1/1/95.] Repealed by 05-15-119, filed 7/18/05, effective 9/15/05. Statutory Authority: RCW 43.20.-050. Later promulgation, see chapter 246-272A WAC.

246-272-25001 Waiver of state regulations. [Statutory Authority: RCW 43.20.050. 95-09-018, § 246-272-25001, filed 4/11/95, effective 5/12/95; 94-09-025, § 246-272-25001, filed 4/15/94, effective 1/1/95.] Repealed by 05-15-119, filed 7/18/05, effective 9/15/05. Statutory Authority: RCW 43.20.050. Later promulgation, see chapter 246-272A WAC.

246-272-26001 Enforcement. [Statutory Authority: RCW 43.20.050. 94-09-025, § 246-272-26001, filed 4/15/94, effective 1/1/95.] Repealed by 05-15-119, filed 7/18/05, effective 9/15/05. Statutory Authority: RCW 43.20.050. Later promulgation, see chapter 246-272A WAC.

246-272-27001 Notice of decision—Adjudicative proceeding. [Statutory Authority: RCW 43.20.050. 94-09-025, § 246-272-27001, filed 4/15/94, effective 1/1/95.] Repealed by 05-15-119, filed 7/18/05, effective 9/15/05. Statutory

Authority: RCW 43.20.050. Later promulgation, see chapter 246-272A WAC.

246-272-28001 Severability. [Statutory Authority: RCW 43.20.050. 94-09-025, § 246-272-28001, filed 4/15/94, effective 1/1/95.] Repealed by 05-15-119, filed 7/18/05, effective 9/15/05. Statutory Authority: RCW 43.20.050. Later promulgation, see chapter 246-272A WAC.

WAC 246-272-990 Fees. (1) The minimum fee for required review of larger on-site system's engineering reports and plans and specifications shall be four hundred dollars. If review time exceeds eight hours, fifty dollars for each additional hour or part of an hour shall be added to the minimum fee. The fee for pre-site inspections for larger on-site systems shall be one hundred dollars per visit. The fee for final inspection of larger on-site systems shall be one hundred dollars per site visit.

(2) The minimum fee for required review of proprietary devices shall be two hundred dollars. If review time exceeds four hours, fifty dollars for each additional hour or part of an hour shall be added to the minimum fee.

(3) The minimum fee for required review of experimental systems shall be four hundred dollars. If review time exceeds eight hours, fifty dollars for each additional hour or part of an hour shall be added to the minimum fee.

[Statutory Authority: RCW 43.70.040. 91-02-050 (Order 122), § 246-272-990, filed 12/27/90, effective 1/31/91.]

Chapter 246-272A WAC
ON-SITE SEWAGE SYSTEMS

WAC

PURPOSE AND ADMINISTRATION

246-272A-0001 Purpose, objectives, and authority.
246-272A-0005 Administration.
246-272A-0010 Definitions.
246-272A-0015 Local management and regulation.

GENERAL REQUIREMENTS

246-272A-0020 Applicability.
246-272A-0025 Connection to public sewer system.

SEWAGE PRODUCTS AND TECHNOLOGIES

246-272A-0100 Sewage technologies.
246-272A-0110 Proprietary treatment products—Certification and registration.
246-272A-0120 Proprietary treatment product registration—Process and requirements.
246-272A-0125 Transition from the list of approved systems and products to the registered list—Treatment products.
246-272A-0130 Bacteriological reduction.
246-272A-0135 Transition from the list of approved systems and products to the registered list—Bacteriological reduction.
246-272A-0140 Proprietary distribution products—Certification and registration.
246-272A-0145 Proprietary distribution product registration—Process and requirements.
246-272A-0150 Transition from the list of approved systems and products to the registered list—Distribution products.
246-272A-0170 Product development permits.
246-272A-0175 Transition from the experimental system program to application for product registration.

SPECIFIC REQUIREMENTS

246-272A-0200 Permit requirements.
246-272A-0210 Location.
246-272A-0220 Soil and site evaluation.
246-272A-0230 Design requirements—General.
246-272A-0232 Design requirements—Septic tank sizing.
246-272A-0234 Design requirements—Soil dispersal components.
246-272A-0238 Design requirements—Facilitate operation, monitoring and maintenance.
246-272A-0240 Holding tank sewage systems.
246-272A-0250 Installation.
246-272A-0260 Inspection.
246-272A-0265 Record drawings.
246-272A-0270 Operation, monitoring, and maintenance—Owner responsibilities.
246-272A-0275 Operation, monitoring, and maintenance—Food service establishments.
246-272A-0280 Repair of failures.
246-272A-0290 Expansions.
246-272A-0300 Abandonment.
246-272A-0310 Septage management.
246-272A-0320 Developments, subdivisions, and minimum land area requirements.
246-272A-0340 Certification of installers, pumpers, and maintenance service providers.
246-272A-0400 Technical advisory committee.
246-272A-0410 Policy advisory committee.
246-272A-0420 Waiver of state regulations.
246-272A-0425 Required rule review.
246-272A-0430 Enforcement.
246-272A-0440 Notice of decision—Adjudicative proceeding.
246-272A-0450 Severability.
246-272A-990 Fees.

PURPOSE AND ADMINISTRATION

WAC 246-272A-0001 Purpose, objectives, and authority. (1) The purpose of this chapter is to protect the public health by minimizing:

(a) The potential for public exposure to sewage from on-site sewage systems; and

(b) Adverse effects to public health that discharges from on-site sewage systems may have on ground and surface waters.

(2) This chapter regulates the location, design, installation, operation, maintenance, and monitoring of on-site sewage systems to:

(a) Achieve effective long-term sewage treatment and effluent dispersal; and

(b) Limit the discharge of contaminants to waters of the state.

(3) The state board of health is authorized under RCW 43.20.050 to establish minimum requirements for the department of health and local boards of health, and consistent with RCW 43.70.310 integrating the preservation of public health with protection of the environment in order to endorse policies in common.

(4) This chapter is intended to coordinate with other applicable statutes and rules for the design of on-site sewage systems under chapter 18.210 RCW and chapter 196-33 WAC.

(5) This chapter is intended to coordinate with other applicable statutes for land use planning under chapters 36.70 and 36.70A RCW, and the statutes for subdivision of land under chapter 58.17 RCW.

[Statutory Authority: RCW 43.20.050. 05-15-119, § 246-272A-0001, filed 7/18/05, effective 9/15/05.]

WAC 246-272A-0005 Administration. The local health officers and the department shall administer this chapter under the authority and requirements of chapters 70.05, 70.08, 70.118, 70.46, and 43.70 RCW. RCW 70.05.060(7) authorizes local health officers to charge fees for the administration of this chapter.

[Statutory Authority: RCW 43.20.050. 05-15-119, § 246-272A-0005, filed 7/18/05, effective 9/15/05.]

WAC 246-272A-0010 Definitions. (1) Acronyms used in this chapter:

"ANSI" means American National Standards Institute.

"BOD" means biochemical oxygen demand, typically expressed in mg/L.

"$CBOD_5$" means carbonaceous biochemical oxygen demand, typically expressed in mg/L.

"FC" means fecal coliform, typically expressed in number colonies/100 ml.

"LOSS" means a large on-site sewage system (see chapter 246-272B WAC).

"NSF" means National Sanitation Foundation International.

"O&G" (formerly referred to as FOG) means oil and grease, a component of sewage typically originating from food stuffs (animal fats or vegetable oils) or consisting of compounds of alcohol or glycerol with fatty acids (soaps and lotions). Typically expressed in mg/L.

"OSS" means on-site sewage system.

"RS&G" means recommended standards and guidance.

"SSAS" means a subsurface soil absorption system.

"TAC" means the technical advisory committee established in WAC 247-272A-0400.

"TN" means total nitrogen, typically expressed in mg/L.

"TSS" means total suspended solids, a measure of all suspended solids in a liquid, typically expressed in mg/L.

"USEPA" means United States Environmental Protection Agency.

(2) Definitions used in this chapter:

"Additive" means a commercial product added to an on-site sewage system intended to affect the performance or aesthetics of an on-site sewage system.

"Approved" means a written statement of acceptability issued by the local health officer or the department.

"Bed" means a soil dispersal component consisting of an excavation with a width greater than three feet.

"Building sewer" means that part of the horizontal piping of a drainage system extending from the building drain, which collects sewage from all the drainage pipes inside a building, to an on-site sewage system. It begins two feet outside the building wall and conveys sewage from the building drain to the remaining portions of the on-site sewage system.

"Cesspool" means a pit receiving untreated sewage and allowing the liquid to seep into the surrounding soil or rock.

"Conforming system" means any on-site sewage system or component, meeting any of the following criteria:

(a) In full compliance with new construction requirements under this chapter; or

(b) Approved, installed and operating in accordance with requirements of previous editions of this chapter; or

(c) Permitted by the waiver process under WAC 246-272A-0420 that assures public health protection by higher treatment performance or other methods.

"Cover material" means soil placed over a soil dispersal component composed predominately of mineral material with no greater than ten percent organic content. Cover material may contain an organic surface layer for establishing a vegetative landscape to reduce soil erosion.

"Cuts and/or banks" means any naturally occurring or artificially formed slope greater than one hundred percent (forty-five degrees) and extending vertically at least five feet from the toe of the slope to the top of the slope as follows:

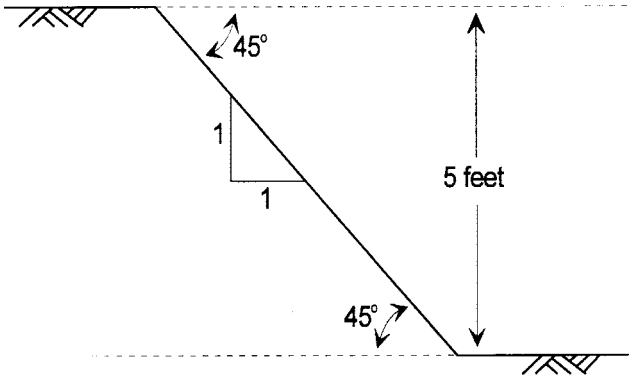

"Department" means the Washington state department of health.

"Designer" means a person who matches site and soil characteristics with appropriate on-site sewage technology. Throughout this chapter this term applies to both on-site sewage treatment system designers licensed under chapter 18.210 RCW and professional engineers licensed under chapter 18.43 RCW.

"Design flow" means the maximum volume of sewage a residence, structure, or other facility is estimated to generate in a twenty-four-hour period. It incorporates both an operating capacity and a surge capacity for the system during periodic heavy use events. The sizing and design of the on-site sewage system components are based on the design flow.

"Development" means the creation of a residence, structure, facility, subdivision, site, area, or similar activity resulting in the production of sewage.

"Disinfection" means the process of destroying pathogenic microorganisms in sewage through the application of ultraviolet light, chlorination, or ozonation.

"Distribution technology" means any arrangement of equipment and/or materials that distributes sewage within an on-site sewage system.

"Drain field" see subsurface soil absorption system (SSAS) and soil dispersal component.

"Drainrock" means clean washed gravel or crushed rock ranging in size from three-quarters inch to two and one-half inches, and containing no more than two percent by weight passing a US No. 8 sieve and no more than one percent by weight passing a US No. 200 sieve.

"Effluent" means liquid discharged from a septic tank or other on-site sewage system component.

"Expanding clay" means a clay soil with the mineralogy of clay particles, such as those found in the Montmorillonite/Smectite Group, which causes the clay particles to expand when they absorb water, closing the soil pores, and contract when they dry out.

"Expansion" means a change in a residence, facility, site, or use that:

(a) Causes the sewage quantity or quality to exceed the existing design flow of the on-site system, for example, when

a residence is increased from two to three bedrooms or a change in use from an office to a restaurant; or

(b) Reduces the treatment or dispersal capability of the existing on-site sewage system or the reserve area, for example, when a building is placed over a reserve area.

"Extremely gravelly" means soil with sixty percent or more, but less than ninety percent rock fragments by volume.

"Failure" means a condition of an on-site sewage system or component that threatens the public health by inadequately treating sewage or by creating a potential for direct or indirect contact between sewage and the public. Examples of failure include:

(a) Sewage on the surface of the ground;

(b) Sewage backing up into a structure caused by slow soil absorption of septic tank effluent;

(c) Sewage leaking from a sewage tank or collection system;

(d) Cesspools or seepage pits where evidence of ground water or surface water quality degradation exists;

(e) Inadequately treated effluent contaminating ground water or surface water; or

(f) Noncompliance with standards stipulated on the permit.

"Fecal coliform" means bacteria common to the digestive systems of warm-blooded animals that are cultured in standard tests. Counts of these organisms are typically used to indicate potential contamination from sewage or to describe a level of needed disinfection. Generally expressed as colonies per 100 ml.

"Gravelly" means soils with fifteen percent or more, but less than thirty-five percent rock fragments by volume.

"Gray water" means sewage from bathtubs, showers, bathroom sinks, washing machines, dishwashers, and kitchen sinks. It includes sewage from any source in a residence or structure that has not come into contact with toilet wastes.

"Ground water" means subsurface water occupying the zone of saturated soil, permanently, seasonally, or as the result of the tides. Indications of ground water may include:

(a) Water seeping into or standing in an open excavation from the soil surrounding the excavation or monitoring ports.

(b) Spots or blotches of different color or shades of color interspersed with a dominant color in soil, caused by reduction and oxidation of iron. These color patterns are redoximorphic features, commonly referred to as mottling. Redoximorphic features often indicate the intermittent presence of ground water and may indicate poor aeration and impeded drainage. Also see "water table."

"Holding tank sewage system" means an on-site sewage system which incorporates a sewage tank without a discharge outlet, the services of a sewage pumper/hauler, and the off-site treatment and disposal for the sewage generated.

"Hydraulic loading rate" means the amount of effluent applied to a given treatment step, in this chapter expressed as gallons per square foot per day (gal/sq.ft./day).

"Industrial wastewater" means the water or liquid carried waste from an industrial process. These wastes may result from any process or activity of industry, manufacture, trade or business, from the development of any natural resource, or from animal operations such as feedlots, poultry houses, or dairies. The term includes contaminated storm water and leachate from solid waste facilities.

"Infiltrative surface" means the surface within a treatment component or soil dispersal component to which effluent is applied and through which effluent moves into original, undisturbed soil or other porous treatment media.

"Installer" means a person approved by the local health officer to install on-site sewage systems or components.

"Local health officer" means the health officer of the city, county, or city-county health department or district within the state of Washington, or a representative authorized by and under the direct supervision of the local health officer, as defined in chapter 70.05 RCW.

"Maintenance" means the actions necessary to keep the on-site sewage system components functioning as designed.

"Massive structure" means the condition of a soil layer in which the layer appears as a coherent or solid mass not separated into peds of any kind.

"Moderate structure" means well-formed distinct peds evident in undisturbed soil. When disturbed, soil material parts into a mixture of whole peds, broken peds, and material that is not in peds.

"Monitoring" means periodic or continuous checking of an on-site sewage system, which is performed by observations and measurements, to determine if the system is functioning as intended and if system maintenance is needed. Monitoring also includes maintaining accurate records that document monitoring activities.

"On-site sewage system" (OSS) means an integrated system of components, located on or nearby the property it serves, that conveys, stores, treats, and/or provides subsurface soil treatment and dispersal of sewage. It consists of a collection system, a treatment component or treatment sequence, and a soil dispersal component. An on-site sewage system also refers to a holding tank sewage system or other system that does not have a soil dispersal component.

"Operating capacity" means the average daily volume of sewage an OSS can treat and disperse on a sustained basis. The operating capacity, which is lower than the design flow, is an integral part of the design and is used as an index in OSS monitoring.

"Ordinary high-water mark" means the mark on lakes, streams, springs, and tidal waters, found by examining the beds and banks and ascertaining where the presence and action of waters are so common and usual, and so long continued in all ordinary years, as to mark upon the soil a character distinct from that of the abutting upland with respect to vegetation, as that condition exists on the effective date of this chapter, or as it may naturally change thereafter. The following definitions apply where the ordinary high-water mark cannot be found:

(a) The ordinary high-water mark adjoining marine water is the elevation at mean higher high tide; and

(b) The ordinary high-water mark adjoining freshwater is the line of mean high water.

"Ped" means a unit of soil structure such as blocks, column, granule, plate or prism formed by natural processes.

"Person" means any individual, corporation, company, association, society, firm, partnership, joint stock company, or any governmental agency, or the authorized agents of these entities.

"Planned unit development" means a subdivision characterized by a unified site design, clustered residential

units and/or commercial units, and areas of common open space.

"Platy structure" means soil that contains flat peds that lie horizontally and often overlap. This type of structure will impede the vertical movement of water.

"Pressure distribution" means a system of small diameter pipes equally distributing effluent throughout a SSAS, as described in the department's "*Recommended Standards and Guidance for Pressure Distribution Systems*," 2001. A subsurface drip system may be used wherever the chapter requires pressure distribution.

"Professional engineer" means a person who is currently licensed as an engineer under the provisions of chapter 18.43 RCW.

"Proprietary product" means a sewage treatment and distribution technology, method, or material subject to a patent or trademark.

"Public domain technology" means a sewage treatment and distribution technology, method, or material not subject to a patent or trademark.

"Public sewer system" means a sewerage system:

(a) Owned or operated by a city, town, municipal corporation, county, or other approved ownership consisting of a collection system and necessary trunks, pumping facilities and a means of final treatment and disposal; and

(b) Approved by or under permit from the department of ecology, the department of health and/or a local health officer.

"Pumper" means a person approved by the local health officer to remove and transport sewage or septage from on-site sewage systems.

"Record drawing" means an accurate graphic and written record of the location and features of the OSS that are needed to properly monitor, operate, and maintain that system.

"Repair" means the relocation, replacement or reconstruction of a failed on-site sewage system.

"Reserve area" means an area of land approved for the installation of a conforming system that is protected and maintained for replacement of the OSS upon its failure.

"Residential sewage" means sewage having the constituency and strength typical of wastewater from domestic households.

"Restrictive layer" means a stratum impeding the vertical movement of water, air, and growth of plant roots, such as hardpan, claypan, fragipan, caliche, some compacted soils, bedrock and unstructured clay soils.

"Rock fragment" means rock or mineral fragments having a diameter of two millimeters or more; for example, gravel, cobbles, stones, and boulders.

"Seepage pit" means an excavation more than three feet deep where the sidewall of the excavation is designed to dispose of septic tank effluent. Seepage pits may also be called "dry wells."

"Septage" means the mixture of solid wastes, scum, sludge, and liquids pumped from within septic tanks, pump chambers, holding tanks, and other OSS components.

"Septic tank" means a watertight treatment receptacle receiving the discharge of sewage from a building sewer or sewers, designed and constructed to permit separation of settleable and floating solids from the liquid, detention and anaerobic digestion of the organic matter, prior to discharge of the liquid.

"Septic system" see on-site sewage system or OSS.

"Sewage" means any urine, feces, and the water carrying human wastes, including kitchen, bath, and laundry wastes from residences, buildings, industrial establishments or other places.

"Sewage quality" means contents in sewage that include:

(a) $CBOD_5$, TSS, and O&G;

(b) Other parameters that can adversely affect treatment. Examples include pH, temperature, and dissolved oxygen;

(c) Other constituents that create concerns due to specific site sensitivity. Examples include fecal coliform and nitrogen.

"Sewage tank" means a prefabricated or cast-in-place septic tank, pump tank/dosing chamber, holding tank, grease interceptor, recirculating filter tank or any other tanks as they relate to on-site sewage systems including tanks for use with proprietary products.

"Soil dispersal component" means a technology that releases effluent from a treatment component into the soil for dispersal, final treatment and recycling.

"Soil log" means a detailed description of soil characteristics providing information on the soil's capacity to act as an acceptable treatment and dispersal medium for sewage.

"Soil scientist" means a person certified by the American Society of Agronomy as a Certified Professional Soil Scientist.

"Soil type" means one of seven numerical classifications of fine earth particles and rock fragments as described in WAC 246-272A-0220 (2)(e).

"Standard methods" means the *20th Edition of Standard Methods for the Examination of Water and Wastewater*, prepared and published jointly by the American Public Health Association, the American Water Works Association and the Water Environment Federation.

"Strong structure" means peds are distinct in undisturbed soil. They separate cleanly when soil is disturbed, and the soil material separates mainly into whole peds when removed.

"Subdivision" means a division of land or creation of lots or parcels, described under chapter 58.17 RCW, including both long and short subdivisions, planned unit developments, and mobile home parks.

"Subsurface drip system" means an efficient pressurized wastewater distribution system that can deliver small, precise doses of effluent to soil surrounding the drip distribution piping (called dripline) as described in the department's "*Recommended Standards and Guidance for Subsurface Drip Systems*."

"Subsurface soil absorption system" (SSAS) means a soil dispersal component of trenches or beds containing either a distribution pipe within a layer of drainrock covered with a geotextile, or an approved gravelless distribution technology, designed and installed in original, undisturbed, unsaturated soil providing at least minimal vertical separation as established in this chapter, with either gravity or pressure distribution of the treatment component effluent.

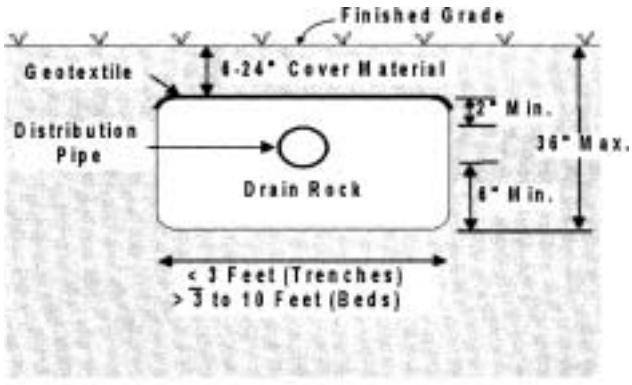

"Surface water" means any body of water, whether fresh or marine, flowing or contained in natural or artificial unlined depressions for significant periods of the year, including natural and artificial lakes, ponds, springs, rivers, streams, swamps, marshes, irrigation canals and tidal waters.

"Timed dosing" means delivery of discrete volumes of sewage at prescribed time intervals.

"Treatment component" means a technology that treats sewage in preparation for further treatment and/or dispersal into the soil environment. Some treatment components, such as mound systems, incorporate a soil dispersal component in lieu of separate treatment and soil dispersal components.

"Treatment level" means one of six levels (A, B, C, D, E, & N) used in these rules to:

(a) Identify treatment component performance demonstrated through requirements specified in WAC 246-272A-0110; and

(b) Match site conditions of vertical separation and soil type with treatment components. Treatment levels used in these rules are not intended to be applied as field compliance standards. Their intended use is for establishing treatment product performance in a product testing setting under established protocols by qualified testing entities.

"Treatment sequence" means any series of treatment components that discharges treated sewage to the soil dispersal component.

"Trench" means a soil dispersal component consisting of an excavation with a width of three feet or less.

"Unit volume of sewage" means:

(a) Flow from a single-family residence;

(b) Flow from a mobile home site in a mobile home park; or

(c) Four hundred fifty gallons of sewage per day where the proposed development is not single-family residences or a mobile home park.

"Vertical separation" means the depth of unsaturated, original, undisturbed soil of soil types 1-6 between the bottom infiltrative surface of a soil dispersal component and the highest seasonal water table, a restrictive layer, or soil type 7 as illustrated below by the profile drawing of subsurface soil absorption systems:

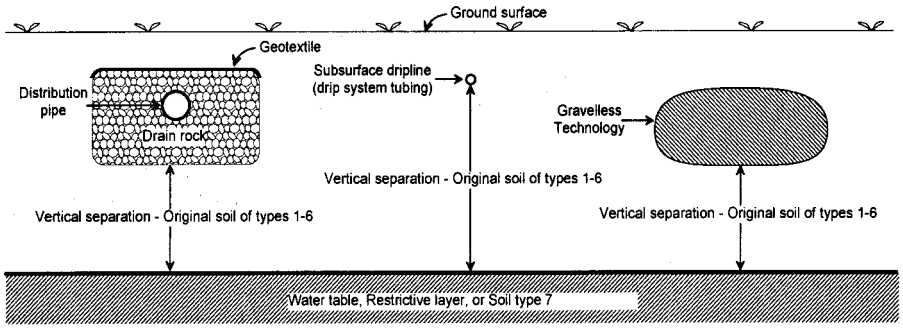

"Very gravelly" means soil containing thirty-five percent or more, but less than sixty percent rock fragments by volume.

"Water table" means the upper surface of the ground water, whether permanent or seasonal. Also see "ground water."

"Well" means any excavation that is constructed when the intended use of the well is for the location, diversion, artificial recharge, observation, monitoring, dewatering or withdrawal of ground water for agricultural, municipal, industrial, domestic, or commercial use. Excluded are:

(a) A temporary observation or monitoring well used to determine the depth to a water table for locating an OSS;

(b) An observation or monitoring well used to measure the effect of an OSS on a water table; and

(c) An interceptor or curtain drain constructed to lower a water table.

[Statutory Authority: RCW 43.20.050. 05-15-119, § 246-272A-0010, filed 7/18/05, effective 9/15/05.]

WAC 246-272A-0015 Local management and regulation. (1) By July 1, 2007, the local health officers of health jurisdictions in the twelve counties bordering Puget Sound shall develop a written plan that will provide guidance to the local health jurisdiction regarding development and management activities for all OSS within the jurisdiction. The plan must specify how the local health jurisdiction will:

(a) Progressively develop and maintain an inventory of all known OSS in operation within the jurisdiction;

(b) Identify any areas where OSS could pose an increased public health risk. The following areas shall be given priority in this activity:

(i) Shellfish protection districts or shellfish growing areas;

(ii) Sole source aquifers designated by the USEPA;

(iii) Areas in which aquifers used for potable water as designated under the Washington State Growth Management Act, chapter 36.70A RCW are critically impacted by recharge;

(iv) Designated wellhead protection areas for Group A public water systems;

(v) Up-gradient areas directly influencing water recreation facilities designated for swimming in natural waters with artificial boundaries within the waters as described by the Water Recreation Facilities Act, chapter 70.90 RCW;

(vi) Areas designated by the department of ecology as special protection areas under WAC 173-200-090, Water quality standards for ground waters of the state of Washington;

(vii) Wetland areas under production of crops for human consumption;

(viii) Frequently flooded areas including areas delineated by the Federal Emergency Management Agency and or as designated under the Washington State Growth Management Act, chapter 36.70A RCW;

(ix) Areas where nitrogen has been identified as a contaminant of concern; and

(x) Other areas designated by the local health officer.

(c) Identify operation, maintenance and monitoring requirements commensurate with risks posed by OSS within the geographic areas identified in (b) of this subsection;

(d) Facilitate education of homeowners regarding their responsibilities under this chapter and provide operation and maintenance information for all types of systems in use within the jurisdiction;

(e) Remind and encourage homeowners to complete the operation and maintenance inspections required by WAC 246-272A-0270;

(f) Maintain records required under this chapter, including of all operation and maintenance activities as identified; and

(g) Enforce OSS owner permit application, operation, monitoring and maintenance and failure repair requirements defined in WAC 246-272A-0200(1), 246-272A-0270, 246-272A-0275, and 246-272A-0280 (1) and (2);

(h) Describe the capacity of the local health jurisdiction to adequately fund the local OSS plan, including the ability to find failing and unknown systems; and

(i) Assure that it was developed to coordinate with the comprehensive land use plan of the entities governing development in the health officer's jurisdiction.

(2) After being approved by the local board of health following a public hearing, the local health officers required to develop a written plan under subsection (1) of this section shall:

(a) Supply a copy of the plan to the department;

(b) Supply a copy of the plan to the entities responsible for land use planning and development regulations in the health officer's jurisdiction; and

(c) Implement the plan described in subsection (1) of this section.

(3) The plans of local health jurisdictions required to develop a written plan under subsection (1) of this section shall be submitted to the department by July 1, 2007, and shall be reviewed to ensure the elements described in subsection (1) of this section have been addressed. The department shall provide in writing to the local board of health its review of the completeness of the plan.

(4) For purposes of this chapter, the local health jurisdictions in marine counties are Clallam, Island, Kitsap, Jefferson, Mason, San Juan, Seattle-King, Skagit, Snohomish, Tacoma-Pierce, Thurston and Whatcom.

(5) The local health officers for all other jurisdictions not required to develop a written plan under subsection (1) of this section shall develop a written plan that will provide guidance to the local jurisdiction regarding development and management activities for all OSS within the jurisdiction. At a minimum the plan shall include:

(a) A description of the capacity of the local health jurisdiction to provide education and operation and maintenance information for all types of systems in use within the jurisdiction;

(b) A description of how the local health officer will remind and encourage homeowners to complete the operation and maintenance inspection required by WAC 246-272A-0270; and

(c) A description of the capacity of the local health jurisdiction to adequately fund the local OSS plan.

(6) In order to implement the plan described in subsections (1) and (5) of this section, the local health officer shall require the owner of the OSS to:

(a) Comply with additional requirements identified in the plan for the location, design, or performance; and

(b) Comply with the conditions of the operational permit if one is required.

(7) In order to implement the plan described in subsections (1) and (5) of this section, the local health officer may require the owner of the OSS to:

(a) Ensure additional maintenance and monitoring of the OSS;

(b) Provide dedicated easements for inspections, maintenance, and potential future expansion of the OSS;

(c) Place a notice to title identifying any additional requirements for OSS operation, maintenance and monitoring; and

(d) Have an inspection of the OSS at the time of property transfer including the preparation of a "record drawing" if necessary.

(8) No later than July 1, 2006, the department shall develop guidance on local management programs to assist marine local health jurisdictions in plan development.

(9) Until such time as the local board of health decides to adopt its own rules, the local health officer shall enforce this chapter. Local boards of health may adopt and enforce local rules and regulations governing on-site sewage systems when the local regulations are:

(a) Consistent with, and at least as stringent as, this chapter; and

(b) Approved by the department prior to the effective date of local regulations.

(10) A local board of health shall apply for departmental approval of local regulations by initiating the following procedure:

(a) The local board shall submit the proposed local regulations to the department.

(b) Within ninety days of receipt, the department shall:

(i) Approve the regulation in writing; or

(ii) Signify automatic tacit approval with the local regulations and permitting local implementation by failing to act; or

(iii) Deny approval of the regulations. If the department determines local regulations are not consistent with this chapter, the department shall provide specific reasons for denial.

(11) Upon receipt of departmental approval or after ninety days without notification, whichever comes first, the local board may implement adopted regulations. The local board shall provide a copy of the adopted local regulations to the department.

(12) If the department denies approval of local regulations, the local board of health may:

(a) Resubmit revised regulations for departmental consideration; or

(b) Submit a written request for a review of the departmental denial within one hundred twenty days from the date the local board of health receives the written reasons for the denial.

(13) Upon receipt of written request for review of the departmental denial, the department shall:

(a) Acknowledge the receipt of the request in writing; and

(b) Form a mutually acceptable advisory panel consisting of:

(i) One departmental employee;

(ii) One employee from a local health jurisdiction other than that which requested the review; and

(iii) One member of the technical advisory committee.

(14) If good faith efforts to reach agreement are unsuccessful, the local board of health may appeal the denial to the Washington state board of health for resolution.

(15) Nothing in this chapter shall prohibit the adoption and enforcement of more stringent regulations by local health departments.

(16) In the plan required in subsection (1) of this section and in local regulations, the local health officer may address water conservation and include options for the nonpotable reuse of gray water. Any treatment and dispersal of gray water outside the residence or structure must comply with this chapter.

[Statutory Authority: RCW 43.20.050. 05-15-119, § 246-272A-0015, filed 7/18/05, effective 9/15/05.]

GENERAL REQUIREMENTS

WAC 246-272A-0020 Applicability. (1) The local health officer:

(a) Shall apply this chapter to OSS treating sewage and dispersing effluent from residential sources with design flows up to three thousand five hundred gallons per day;

(b) May apply this chapter to OSS for nonresidential sources of sewage if treatment, siting, design, installation, and operation and maintenance measures provide treatment and effluent dispersal equal to that required of residential sources.

(c) May not apply this chapter to industrial wastewater.

(2) The department shall apply this chapter for the registration of proprietary treatment and distribution products.

(3) A valid sewage system design approval, or installation permit issued prior to the effective date of these regulations:

(a) Shall be acted upon in accordance with regulations in force at the time of issuance;

(b) Shall have a maximum validity period of five years from the date of issuance or remain valid for an additional year beyond the effective date of these regulations, whichever assures the most lenient expiration date; and

(c) May be modified to include additional requirements if the health officer determines that a serious threat to public health exists.

(4) This chapter does not apply to facilities regulated as reclaimed water use under chapter 90.46 RCW.

[Statutory Authority: RCW 43.20.050. 05-15-119, § 246-272A-0020, filed 7/18/05, effective 9/15/05.]

WAC 246-272A-0025 Connection to public sewer system. (1) When adequate public sewer services are available within two hundred feet of the residence or facility, the local health officer, upon the failure of an existing on-site sewage system may:

(a) Require hook-up to a public sewer system; or

(b) Permit the repair or replacement of the on-site sewage system only if a conforming system can be designed and installed.

(2) Except as noted in subsection (1) of this section, the owner of a failure shall abandon the OSS under WAC 246-272A-0300 and connect the residence or other facility to a public sewer system when:

(a) The distance between the residence or other facility and an adequate public sewer is two hundred feet or less as measured along the usual or most feasible route of access; and

(b) The sewer utility allows the sewer connection.

(3) The owner of a residence or other facility served by a system meeting the requirements of Table IX of this chapter shall abandon the OSS according to the requirements specified in WAC 246-272A-0300, and connect the residence or other facility to a public sewer system when:

(a) Connection is deemed necessary to protect public health by the local health officer;

(b) An adequate public sewer becomes available within two hundred feet of the residence or other facility as measured along the usual or most economically feasible route of access; and

(c) The sewer utility allows the sewer connection.

(4) Local boards of health may require a new development to connect to a public sewer system to protect public health.

(5) Local boards of health shall require new development or a development with a failing system to connect to a public sewer system if it is required by the comprehensive land use plan or development regulations.

[Statutory Authority: RCW 43.20.050. 05-15-119, § 246-272A-0025, filed 7/18/05, effective 9/15/05.]

SEWAGE PRODUCTS AND TECHNOLOGIES

WAC 246-272A-0100 Sewage technologies. (1) The department may develop recommended standards and guid-

ance to assist local health officers in permitting different types of sewage treatment and distribution technologies including the following four broad categories:

(a) Public domain treatment technologies (e.g., sand filters);

(b) Proprietary treatment products (e.g., aerobic treatment systems and packed bed filters);

(c) Public domain distribution technologies (e.g., gravel or generic gravel substitutes, gravity and pressure distribution methods and materials);

(d) Proprietary distribution products (e.g., subsurface dripline products or gravelless distribution products).

(2) All types of sewage technologies must have either standards for use described in this chapter or departmental recommended standards and guidance before the local health officer may permit them. Recommended standards and guidance may include information and detail such as:

(a) Application;

(b) Design;

(c) Installation;

(d) Operation, monitoring and maintenance;

(e) Performance expectations; and

(f) Sources of information.

[Statutory Authority: RCW 43.20.050. 05-15-119, § 246-272A-0100, filed 7/18/05, effective 9/15/05.]

WAC 246-272A-0110 Proprietary treatment products—Certification and registration. (1) Manufacturers shall register their proprietary treatment products with the department before the local health officer may permit their use.

(2) To qualify for product registration, manufacturers desiring to sell or distribute proprietary treatment products in Washington state shall:

(a) Verify product performance through testing using the testing protocol established in Table I and register their product with the department using the process described in WAC 246-272-0120;

(b) Report test results of influent and effluent sampling obtained throughout the testing period (including normal and stress loading phases) for evaluation of constituent reduction according to Table II;

(c) Demonstrate product performance according to Table III. All thirty-day averages and geometric means obtained throughout the test period must meet the identified threshold values to qualify for registration at that threshold level; and

(d) For registration at levels A, B, and C verify bacteriological reduction according to WAC 246-272A-0130.

(3) Manufacturers verifying product performance through testing according to the following standards or protocols shall have product testing conducted by a testing facility accredited by ANSI:

(a) ANSI/NSF Standard 40—Residential Wastewater Treatment Systems;

(b) NSF Standard 41: Non-Liquid Saturated Treatment Systems;

(c) NSF Protocol P157 Electrical Incinerating Toilets - Health and Sanitation; or

(d) Protocol for bacteriological reduction described in WAC 246-272A-0130.

(4) Manufacturers verifying product performance through testing according to the following standards or protocols shall have product testing conducted by a testing facility meeting the requirements established by the Testing Organization and Verification Organization, consistent with the test protocol and plan:

(a) EPA/NSF—Protocol for the Verification of Wastewater Treatment Technologies; or

(b) EPA Environmental Technology Verification Program protocol for the Verification of Residential Wastewater Treatment Technologies for Nutrient Reduction.

(5) Treatment levels used in these rules are not intended to be applied as field compliance standards. Their intended use is for establishing treatment product performance in a product testing setting under established protocols by qualified testing entities.

TABLE I

Testing Requirements for Proprietary Treatment Products	
Treatment Component/ Sequence Category	**Required Testing Protocol**
Category 1 Designed to treat sewage with strength typical of a residential source when septic tank effluent is anticipated to be equal to or less than treatment level E.	ANSI/NSF 40—Residential Wastewater Treatment Systems (protocols dated between July 1996 and the effective date of these rules)
Category 2 Designed to treat high-strength sewage when septic tank effluent is anticipated to be greater than treatment level E. (Such as at restaurants, grocery stores, mini-marts, group homes, medical clinics, residences, etc.)	EPA/NSF Protocol for the Verification of Wastewater Treatment Technologies/ EPA Environmental Technology Verification (April 2001)
Category 3 Black water component of residential sewage (such as composting and incinerating toilets).	NSF/ANSI Standard 41: Non-Liquid Saturated Treatment Systems (September 1999) NSF Protocol P157 Electrical Incinerating Toilets - Health and Sanitation (April 2000)
Total Nitrogen Reduction in Categories 1 & 2 (Above)	Protocol for the Verification of Residential Wastewater Treatment Technologies for Nutrient Reduction/EPA Environmental Technology Verification Program (November, 2000)

TABLE II

Test Results Reporting Requirements for Proprietary Treatment Products	
Treatment Component/Sequence Category	**Testing Results Reported**
Category 1 Designed to treat sewage with strength typical of a residential source when septic tank effluent is anticipated to be equal to or less than treatment level E.	Report test results of influent and effluent sampling obtained throughout the testing period for evaluation of constituent reduction for the parameters: $CBOD_5$, and TSS: ❏ Average ❏ Standard Deviation ❏ Minimum ❏ Maximum ❏ Median ❏ Interquartile Range ❏ 30-day Average (for each month) For bacteriological reduction performance, report fecal coliform test results of influent and effluent sampling by geometric mean from samples drawn within thirty-day or monthly calendar periods, obtained from a minimum of three samples per week throughout the testing period. See WAC 246-272A-0130. Test report must also include the individual results of all samples drawn throughout the test period.
Category 2 Designed to treat high-strength sewage when septic tank effluent is anticipated to be greater than treatment level E. (Such as at restaurants, grocery stores, mini-marts, group homes, medical clinics, residences, etc.)	Report all individual test results and full test average values of influent and effluent sampling obtained throughout the testing period for: $CBOD_5$, TSS and O&G. Establish the treatment capacity of the product tested in pounds per day for $CBOD_5$.
Category 3 Black water component of residential sewage (such as composting and incinerating toilets).	Report test results on all required performance criteria according to the format prescribed in the NSF test protocol described in Table I.
Total Nitrogen Reduction in Categories 1 & 2 (Above)	Report test results on all required performance criteria according to the format prescribed in the test protocol described in Table I.

TABLE III

Product Performance Requirements for Proprietary Treatment Products						
Treatment Component/Sequence Category	**Product Performance Requirements**					
Category 1 Designed to treat sewage with strength typical of a residential source when septic tank effluent is anticipated to be equal to or less than treatment level E.	**Treatment System Performance Testing Levels**					
	Level	**Parameters**				
		$CBOD_5$	**TSS**	**O&G**	**FC**	**TN**
	A	10 mg/L	10 mg/L	——	200/100 ml	——
	B	15 mg/L	15 mg/L	——	1,000/100 ml	——
	C	25 mg/L	30 mg/L	——	50,000/100 ml	——
	D	25 mg/L	30 mg/L	——	——	——
	E	125 mg/L	80 mg/L	20 mg/L	——	——
	N	——	——	——	——	20 mg/L
	Values for Levels A - D are 30-day values (averages for $CBOD_5$, TSS, and geometric mean for FC.) All 30-day averages throughout the test period must meet these values in order to be registered at these levels. Values for Levels E and N are derived from full test averages.					
Category 2 Designed to treat high-strength sewage when septic tank effluent is anticipated to be greater than treatment level E. (Such as at restaurants, grocery stores, mini-marts, group homes, medical clinics, residences, etc.)	All of the following requirements must be met: (1) All full test averages must meet Level E; and (2) Establish the treatment capacity of the product tested in pounds per day for $CBOD_5$.					

Product Performance Requirements for Proprietary Treatment Products	
Treatment Component/Sequence Category	**Product Performance Requirements**
Category 3 Black water component of residential sewage (such as composting and incinerating toilets).	Test results must meet the performance requirements established in the NSF test protocol.
Total Nitrogen Reduction in Categories 1 & 2 (Above)	Test results must establish product performance effluent quality meeting Level N, when presented as the full test average.

[Statutory Authority: RCW 43.20.050. 05-15-119, § 246-272A-0110, filed 7/18/05, effective 9/15/05.]

WAC 246-272A-0120 Proprietary treatment product registration—Process and requirements. (1) Manufacturers shall register their proprietary treatment product(s) with the department by submitting a complete application in the format provided by the department, including:

(a) Manufacturer's name, mailing address, street address and phone number;

(b) Contact individual's name, mailing address, street address, and phone number. The contact individual must be vested with the authority to represent the manufacturer in this capacity;

(c) Name, including specific brand and model, of the proprietary treatment product;

(d) A description of the function of the proprietary treatment product along with any known limitation on the use of the product;

(e) Product description and technical information, including process flow drawings and schematics; materials and characteristics; component design specifications; design capacity, volumes and flow assumptions and calculations; components; dimensioned drawings and photos;

(f) For treatment systems in Category 2, daily capacity of the model or models in pounds per day of $CBOD_5$;

(g) Siting and installation requirements;

(h) Detailed description, procedure and schedule of routine service and system maintenance events;

(i) Estimated operational costs for the first five years of the treatment component's life. This shall include both estimated annual electricity costs, and routine maintenance costs, including replacement of parts;

(j) Identification of information subject to protection from disclosure of trade secrets;

(k) Copies of product brochures & manuals: *Sales & Promotional; Design; Installation; Operation & Maintenance; and Homeowner Instructions*;

(l) The most recently available product test protocol and results report;

(m) A signed and dated certification by the manufacturer's agent specifically including the following statement, "I certify that I represent (INSERT MANUFACTURING COMPANY NAME) and I am authorized to prepare or direct the preparation of this application for registration. I attest, under penalty of law, that this document and all attachments are true, accurate, and complete. I understand and accept that the product testing results reported with this application for registration are the parameters and values to be used for determining conformance with Treatment System Performance Testing Levels established in chapter 246-272A WAC";

(n) A signed and dated certification from the testing entity including the statement, "I certify that I represent (INSERT TESTING ENTITY NAME), that I am authorized to report the testing results for this proprietary treatment product. I attest, under penalty of law, that the report about the test protocol and results is true, accurate, and complete"; and

(o) The fee described in WAC 246-272A-990.

(2) Products within a single series or model line (sharing distinct similarities in design, materials, and capacities) may be registered under a single application, consistent with the provisions of their test protocol for the certification of other products within a product series. Products outside of the series or model line must be registered under separate applications.

(3) Upon receipt of an application the department shall:

(a) Verify that the application is complete;

(b) If complete, place the product on the list of proprietary treatment products.

(4) All registrations are valid for up to one year, expiring on December 31 of each year. Fees are not prorated.

(5) In order to renew technology registration, a manufacturer shall:

(a) Apply for renewal of product registration using the form or in the format provided by the department.

(b) Submit the results of retesting, if the product has completed retesting according to the protocol required for registration and a report from the testing entity has been issued since initial registration or previous renewal. Renewal shall be based on the most recent test results.

(c) Provide an affidavit to the department verifying whether or not the product has changed over the previous year. If the product has changed, the affidavit must also include a full description of the changes. If the product has changed in a way that affects performance, the product may not be renewed and shall meet the requirements for initial registration.

(d) Submit the fee established in WAC 246-272A-990.

(6) As part of product registration renewal, the department shall:

(a) Request field assessment comments from local health officers no later than October 31st of each year. These comments may include concerns about a variety of field assessment issues, including product function, product reliability, and problems arising with operation and maintenance;

(b) Discuss with the TAC any field assessment information that may impact product registration renewal;

(c) Notify the manufacturer of any product to be discussed with the TAC, prior to discussion with the TAC, regarding the nature of comments received; and

(d) Renew the product registration unless:

(i) The manufacturer of a product does not apply for renewal; or

(ii) The department, after deliberation with the TAC, concludes product registration renewal should not be given or

should be delayed until the manufacturer submits information that satisfactorily answers concerns and issues.

(7) The department shall maintain a list of proprietary treatment products meeting the registration requirements established in this chapter. The product registration is a condition of approval for use.

(8) Manufacturers shall have readily accessible information for designers, homeowners, regulators, system owners and other interested parties about their product including:

(a) Product manuals;

(b) Design instructions;

(c) Installation instructions;

(d) Operation and maintenance;

(e) Homeowner instructions; and

(f) A list of representatives and manufacturer certified service providers, if any.

[Statutory Authority: RCW 43.20.050. 05-15-119, § 246-272A-0120, filed 7/18/05, effective 9/15/05.]

WAC 246-272A-0125 Transition from the list of approved systems and products to the registered list—Treatment products. (1) The department's list of approved systems and products shall:

(a) Become static on September 15, 2005. Subsequent changes, additions or deletions to the list of approved systems and products will only be made if approved by the department based on completed applications received prior to September 15, 2005.

(b) Remain in effect until March 15, 2007.

(2) Treatment products not on the department's list of approved systems and products on September 15, 2005, and not otherwise eligible for inclusion on the list by submittal of a completed application prior to September 15, 2005, must be registered with the department according to the requirements of this chapter before being permitted by the local health officer.

(3) Between September 15, 2005, and March 15, 2007, the local health officer may permit treatment products that are on the department's list of approved systems and products or registered with the department under the requirements of this chapter.

(4) After March 15, 2007, local health officers may only permit those treatment products registered under the requirements of this chapter.

(5) In order to be registered, manufacturers with treatment product models specified on the department's list of approved systems and products (excluding products being evaluated under the experimental systems program) on September 15, 2005, or subsequently added to the list as provided in subsection (1)(a) of this section, shall apply for product registration before March 15, 2007, using the following information:

(a) For treatment products approved for use with sewage typical of a residential source:

(i) If product approval was based on performance test results obtained from testing conducted according to a ANSI/NSF Standard 40 protocol dated prior to July 1996, the manufacturer may apply for registration as established by these rules using the performance test results obtained by a qualified testing facility from testing conducted according to a ANSI/NSF Standard 40 test protocol dated prior to July 1996;

(ii) In order to be registered, manufacturers must identify on their application for product registration if the reported product testing results use an excursion allowance. If an excursion allowance is used, only the excursion allowance provided in 1996 and later NSF protocols may be used;

(iii) Thirty-day averaging of sample results must meet the requirements established in 1996 and later NSF protocols;

(iv) If product approval was based upon the performance information obtained through the department's former experimental systems program, manufacturers may apply for registration under this chapter using the performance test results obtained from their experimental system program. This provision is valid for only those models on the list of approved systems and products;

(b) For products approved for use with high-strength residential or commercial sewage:

(i) Manufacturers may apply for product registration using the performance test results and other information previously provided to the department in support of product approval application.

(ii) If product approval was based upon the performance information obtained through the department's former experimental systems program, manufacturers may apply for registration under this chapter using the performance test results obtained from their experimental system program. This provision is valid for only those models on the list of approved systems and products;

(c) Test results for BOD_5 may be submitted in lieu of test results for $CBOD_5$. In these cases the numerical values for $CBOD_5$, will be determined using the following formula:

(BOD_5 value x .83 = $CBOD_5$ value);

(d) In order to be registered for treatment levels A, B or C, a manufacturer shall provide data demonstrating that each of the parameters ($CBOD_5$, TSS and fecal coliform) is met;

(e) Fecal coliform reduction performance must be demonstrated according to the provisions and requirements established in WAC 246-272A-0130 Bacteriological reduction; and

(f) Manufacturers and treatment products must meet all other requirements established in these rules for product registration.

[Statutory Authority: RCW 43.20.050. 05-15-119, § 246-272A-0125, filed 7/18/05, effective 9/15/05.]

WAC 246-272A-0130 Bacteriological reduction. This section establishes the requirements for registering bacteriological reduction processes.

(1) Manufacturers shall, for the purpose of product registration as described in WAC 246-272A-0110 and 246-272A-0120 for meeting treatment levels A, B, or C, verify bacteriological reduction performance by sampling for fecal coliform.

(a) For products not yet tested according to ANSI/NSF Standard 40 testing protocol dated July 1996 or later, the requirements of both ANSI/NSF Standard 40 and the protocol specified in subsection (2) of this section for verifying bacteriological reduction must be met.

(b) For products that have been tested according to ANSI/NSF Standard 40 dated July 1996 or later but have not yet been tested for bacteriological reduction, treatment performance of the treatment product or sequence may be established based on test results for $CBOD_5$ and TSS obtained from the previous ANSI/NSF Standard 40 testing and bacteriological reduction performance based on testing according to the protocol in subsection (2) of this section. Provided that the testing entity must verify the influent wastewater stream throughout the bacteriological testing period meets the influent threshold levels for $CBOD_5$ and TSS required by ANSI/NSF Standard 40 testing protocol.

(2) All test data submitted for product registration shall be produced by an ANSI accredited, third-party testing and certification organization whose accreditation is specific to on-site wastewater treatment products. Bacteriological reduction performance must be determined while the treatment product or sequence is tested according to the ANSI/NSF Standard 40 testing protocol. During this testing the following requirements apply:

(a) Collect samples from both the influent and effluent streams, identifying the treatment performance achieved by the full treatment process (component or sequence);

(b) Obtain influent characteristics falling within a range of 10^6 - 10^8 fecal coliform/100 mL calculated as thirty-day geometric means during the test.

(c) Test the influent to any disinfection unit and report the following at each occasion of sampling performed in (d) of this subsection:

(i) Flow rate;

(ii) pH;

(iii) Temperature;

(iv) Turbidity; and

(v) Color.

(d) Obtain samples for fecal coliform analysis during both the design loading and stress loading periods identified by NSF Standard 40. Grab samples shall be collected from both the influent and effluent on three separate days of the week. Each set of influent and effluent grab samples must be taken from a different dosing time frame (morning, afternoon, or evening) so that samples have been taken from each dosing time frame by the end of the week.

(e) Conduct analyses according to standard methods;

(f) Report the geometric mean of fecal coliform test results from all samples taken within thirty-day or monthly calendar periods;

(g) Report the individual results of all samples taken throughout the test period design and stress loading; and

(h) Report all maintenance and servicing conducted during the testing period, including for example, instances of cleaning a UV lamp, or replenishment of chlorine chemicals.

(3) Manufacturers may register products in treatment levels A and B using disinfection.

(4) Manufacturers may not register products for treatment level C using disinfection.

[Statutory Authority: RCW 43.20.050. 06-01-020, § 246-272A-0130, filed 12/12/05, effective 1/12/06; 05-15-119, § 246-272A-0130, filed 7/18/05, effective 9/15/05.]

WAC 246-272A-0135 Transition from the list of approved systems and products to the registered list—Bacteriological reduction. This section on how bacteriological reduction products on the list of approved systems and products can become registered.

(1) The department's list of approved systems and products shall:

(a) Become static on September 15, 2005. Subsequent changes, additions or deletions to the list of approved systems and products will only be made if approved by the department based on completed applications received prior to September 15, 2005.

(b) Remain in effect until March 15, 2007.

(2) Systems on the department's list of approved systems and products meeting the BOD_5 (or $CBOD_5$) and TSS requirements for treatment standards 1 and 2 may continue to be combined with disinfection equipment and methods specified by the on-site sewage system designer to meet or exceed the fecal coliform reduction performance required by treatment standards 1 and 2, until March 15, 2007.

(3) After March 15, 2007, the local health officer may permit only those treatment products registered as meeting bacteriological reduction portions of treatment level A, B, or C under the requirements of this chapter.

(4) Products that have been tested for bacteriological reduction and have met all the requirements of WAC 246-272A-0130, except the bacteriological influent and/or sampling frequency requirements, may be registered under this chapter to allow continued use of the product after March 15, 2007. In order to register their product, the manufacturer shall:

(a) Assure their product is on the department's list of approved systems and products that have been approved as meeting a bacteriological reduction standard on September 15, 2005, or subsequently added to the list as provided in subsection (1)(a) of this section;

(b) Apply for product registration before March 15, 2007; and

(c) Have their product tested for two additional months of testing using the testing protocol specified in WAC 246-272A-0130(2) to verify the bacteriological reduction performance.

[Statutory Authority: RCW 43.20.050. 05-15-119, § 246-272A-0135, filed 7/18/05, effective 9/15/05.]

WAC 246-272A-0140 Proprietary distribution products—Certification and registration. (1) Manufacturers shall register proprietary distribution products, including gravelless distribution products and subsurface dripline products, with the department before the local health officer may permit their use.

(2) Manufacturers desiring to sell proprietary distribution products shall certify that the product(s) meets the standards established in this chapter and register their product(s) with the department using the process described in WAC 246-272A-0145.

(3) Proprietary gravelless distribution products shall:

(a) Be constructed or manufactured from materials that are nondecaying and nondeteriorating and do not leach chemicals when exposed to sewage and the subsurface soil environment;

(b) Provide liquid storage volume at least equal to the storage volume provided within the thirty percent void space

in a twelve-inch layer of drainrock in a drainrock-filled distribution system. This storage volume must be established by the gravelless distribution products, system design and installation and must be maintained for the life of the system. This requirement may be met on a lineal-foot, or on an overall system design basis;

(c) Provide suitable effluent distribution to the infiltrative surface at the soil interface; and

(d) Maintain the integrity of the trench or bed. The material used, by its nature and its manufacturer-prescribed installation procedure, must withstand the physical forces of the soil sidewalls, soil backfill and the weight of equipment used in the backfilling.

(4) Proprietary subsurface dripline products shall:

(a) Be warranted by the manufacturer for use with sewage and for resistance to root intrusion.

(b) Incorporate emitters with a maximum nominal rated discharge of 1.3 gallons per hour. Emitter discharge rate may be controlled either by use of pressure-compensating emitters or with a pressure regulator.

(c) Be color-coded purple to identify that the pipe contains nonpotable water from a sewage source.

[Statutory Authority: RCW 43.20.050. 05-15-119, § 246-272A-0140, filed 7/18/05, effective 9/15/05.]

WAC 246-272A-0145 Proprietary distribution product registration—Process and requirements. (1) Manufacturers shall register their proprietary distribution product(s) with the department by submitting a complete application in the format provided by the department, including:

(a) Manufacturer's name, mailing address, street address, and phone number;

(b) Contact individual's name, mailing address, street address, and phone number. The contact individual must be vested with the authority to act as the agent of the manufacturer in this capacity;

(c) Name, including specific brand and model, of the proprietary distribution product;

(d) A description of the function of the proprietary distribution product along with any known limitations on its use;

(e) Product description and technical information, including schematics; materials and characteristics; component design specifications; design capacity, volumes and flow assumptions and calculations; components; dimensioned drawings and photos;

(f) Siting and installation requirements;

(g) Detailed description, procedure and schedule of routine service and system maintenance events;

(h) Identification of information subject to protection from disclosure of trade secrets;

(i) Copies of product brochures and manuals: *Sales & Promotional; Design; Installation; Operation & Maintenance; and Homeowner Instructions*;

(j) For gravelless chamber systems a quantitative description of the actual exposed trench-bottom infiltrative surface area for each model seeking registration;

(k) A statement from a professional engineer that certifies the technology meets the standards established in WAC 246-272A-0140;

(l) A signed and dated certification by the manufacturer's agent specifically including the following statement, "I certify that I represent (INSERT MANUFACTURING COMPANY NAME) and I am authorized to prepare or direct the preparation of this application for product registration. I attest, under penalty of law, that this document and all attachments, are true, accurate, and complete."

(m) A signed and dated certification from the licensed professional engineer including the statement, "I certify that I represent (INSERT PROFESSIONAL ENGINEERING FIRM NAME), that I am authorized to certify the performance characteristics for the proprietary distribution product presented in this application. I attest, under penalty of law, that the technology report is true, accurate, and complete."

(n) The fee established in WAC 246-272A-0990.

(2) Products within a single series or model line (sharing distinct similarities in design, materials, and capacities) may be registered under a single application. Products outside of the series or model line must be registered under separate applications.

(3) Upon receipt of an application the department shall:

(a) Verify that the application is complete;

(b) If complete, place the product on the list of proprietary distribution products.

(4) All registrations are valid for up to one year, expiring on December 31st of each year. Required fees are not prorated.

(5) In order to renew a proprietary distribution product registration, a manufacturer must:

(a) Apply for renewal of product registration using the form or in the format provided by the department;

(b) Provide an affidavit to the department verifying whether or not the product has changed over the previous year. If the product has changed, the affidavit must also include a full description of the changes. If the product has changed in a way that affects performance, the product may not be renewed and shall meet the requirements of initial registration; and

(c) Submit the fee established in WAC 246-272A-0990.

(6) As part of product registration renewal, the department shall:

(a) Request field assessment comments from local health officers no later than October 31st of each year. These comments may include concerns about a variety of field assessment issues, including product function, product reliability, and problems arising with operation and maintenance;

(b) Discuss with the TAC any field assessment information that may impact product registration renewal;

(c) Notify the manufacturer of any product to be discussed with the TAC, prior to discussion with the TAC, regarding the nature of comments received; and

(d) Renew the product registration unless:

(i) The manufacturer of a product does not apply for renewal; or

(ii) The department, after deliberation with the TAC, concludes product registration renewal should not be given or should be delayed until the manufacturer submits information that satisfactorily answers concerns and issues.

(7) The department shall maintain a list of proprietary distribution products meeting the registration requirements established in this chapter. Product registration is a condition of approval for use.

(8) Manufacturers shall have readily accessible information for designers, homeowners, regulators, system owners and other interested parties about their product including:

(a) Product manuals;

(b) Design instructions;

(c) Installation instructions;

(d) Operation and maintenance;

(e) Homeowner instructions; and

(f) A list of representatives and manufacturer certified service providers, if any.

[Statutory Authority: RCW 43.20.050. 05-15-119, § 246-272A-0145, filed 7/18/05, effective 9/15/05.]

WAC 246-272A-0150 Transition from the list of approved systems and products to the registered list—Distribution products. (1) The department's list of approved systems and products shall:

(a) Become static on September 15, 2005. Subsequent changes, additions or deletions to the list of approved systems and products will only be made when approved by the department based on completed applications received prior to September 15, 2005.

(b) Remain in effect until March 15, 2007.

(2) Distribution products not on the department's list of approved systems and products on September 15, 2005, and not otherwise eligible for inclusion on the list by submittal of a completed application prior to September 15, 2005, must be registered with the department under this chapter before being permitted by the local health officer.

(3) Between September 15, 2005, and March 15, 2007, the local health officer may permit distribution products that are on the department's list of approved systems and products or registered by the department under the requirements of this chapter.

(4) After March 15, 2007, local health officers may only permit those distribution products registered under the requirements of this chapter.

(5) In order to be registered, manufacturers with distribution product models specified on the department's list of approved systems and products (excluding products being evaluated under the experimental systems program) on September 15, 2005, or subsequently added to the list as provided in subsection (1)(a) of this section, shall apply for product registration before March 15, 2007, using the following information:

(a) Manufacturers may apply for registration using the information previously provided to the department in support of product approval application, without further professional engineer certification.

(b) If product approval was based upon the performance information obtained through the department's former experimental systems program, the manufacturer may apply for registration as established by these rules using the performance test results obtained from their experimental system program, without further professional engineer certification. This provision is valid for only those models on the approved list of systems and products.

(c) Manufacturers and distribution products shall meet all other requirements established in these rules for product registration.

[Statutory Authority: RCW 43.20.050. 05-15-119, § 246-272A-0150, filed 7/18/05, effective 9/15/05.]

WAC 246-272A-0170 Product development permits. (1) A local health officer may issue a product development permit (PDP) for any proprietary treatment component or sequence. In order to protect public health during the development period, a complete system meeting the requirements of this chapter and the site must be installed. The product under development may then be added to the treatment system allowing the product developer to gather data about the product's performance in the field. The PDP allows product developers to explore and develop new technologies prior to product testing and registration under WAC 246-272A-0110 and 246-272A-0120. The PDP is not an alternative to testing and registration.

(2) An application for a PDP shall include all of the following:

(a) Proof of an existing conforming system in compliance with all local requirements, or a permit for a conforming system. The conforming system must be installed in its entirety before the PDP becomes valid;

(b) A description of the product under development including performance goals and a description of how the system will be used to treat sewage;

(c) Documentation of financial assurance that will cover the correction of any potential public health threats or environmental damage resulting from the use of the product under development. Instruments of financial assurance include:

(i) An irrevocable letter of credit in the amount required by the local health officer issued by an entity authorized to issue letters of credit in Washington state;

(ii) Cash or security deposit payable to the local health jurisdiction in the amount required by the local health officer; or

(iii) Any other financial assurance that satisfies the local health officer.

(d) Documentation signed by the owner of the proposed product development site allowing access to the local health officer for inspection of the site; and

(e) Any other information required by the local health officer.

(3) The local health officer may stipulate additional requirements for a PDP necessary to assure the performance of the conforming system, including providing performance data to the local health officer.

(4) A PDP is a site-specific permit. Product development at multiple sites requires a PDP for each site.

(5) During the term of the PDP, product development, testing and sampling are under the full control of the product developer and all data collected is considered proprietary information.

(6) A PDP is valid for one year and may be renewed by the local health officer.

(7) The product development period is over when the original PDP or any subsequently renewed permits have expired. At this time the product developer:

(a) Shall, at the direction of the local health officer, remove the product under development from the site, reestab-

lishing all appropriate plumbing and power connections for the conforming system.

(b) May subject the product to performance testing described in WAC 246-272A-0110 in order to allow the product to be eligible for registration with the department.

(8) The local health officer may revoke or amend a PDP:

(a) If the continued operation or presence of the product under development:

(i) Presents a risk to the public health or the environment;

(ii) Causes adverse effects on the proper function of the conforming system on the site; or

(iii) Leaks or discharges sewage on the surface of the ground.

(b) If the developer fails to comply with any requirements stipulated on the permit by the local health officer.

(9) The local health officer may charge fees adequate to administer the PDP program.

[Statutory Authority: RCW 43.20.050. 05-15-119, § 246-272A-0170, filed 7/18/05, effective 7/1/07.]

WAC 246-272A-0175 Transition from the experimental system program to application for product registration. (1) The department's list of approved systems and products shall:

(a) Become static on September 15, 2005. Subsequent changes, additions or deletions to the list of approved systems and products will only be made when approved by the department based on completed applications received prior to September 15, 2005.

(b) Remain in effect until March 15, 2007.

(2) Persons representing experimental systems not on the department's list of approved systems and products on September 15, 2005, and not otherwise eligible for inclusion on the list by submittal of a completed application prior to September 15, 2005, may apply to a local health officer for a product development permit under WAC 246-272A-0170.

(3) Those persons representing experimental systems on the department's list of approved systems and products on September 15, 2005, may continue with the experimental testing according to the experimental testing protocol agreed to by the department until completed. Upon completion of the testing, the person may apply to the department for product registration under WAC 246-272A-0120 or 246-272A-0145. In considering the results of the experimental testing protocol, the department may seek a recommendation from the TAC. The department may determine:

(a) The product meets the requirements for registration and place it on the list of registered proprietary products; or

(b) The product does not meet the requirements for registration. Any further treatment product development and testing may continue under WAC 246-272A-0170, not under the department's previous experimental system program. The requirements of WAC 246-272A-0110, 246-272A-0130, or 246-272A-0140 apply to any further application for product registration.

[Statutory Authority: RCW 43.20.050. 05-15-119, § 246-272A-0175, filed 7/18/05, effective 9/15/05.]

SPECIFIC REQUIREMENTS

WAC 246-272A-0200 Permit requirements. (1) Prior to beginning the construction process, a person proposing the installation, repair, modification, connection to, or expansion of an OSS, shall report the following and obtain a permit from the local health officer:

(a) General information including:

(i) Name and address of the property owner and the applicant at the head of each page of submission;

(ii) Parcel number and if available, the address of the site;

(iii) Source of drinking water supply;

(iv) Identification if the property is within the boundaries of a recognized sewer utility;

(v) Size of the parcel;

(vi) Type of permit for which application is being made, for example, new installation, repair, expansion, modification, or operational;

(vii) Source of sewage, for example, residence, restaurant, or other type of business;

(viii) Location of utilities;

(ix) Name of the site evaluator;

(x) Name, signature and stamp of the designer;

(xi) Date of application; and

(xii) Name and signature of the fee simple owner, the contract purchaser of the property or the owner's authorized agent.

(b) The soil and site evaluation as specified under WAC 246-272A-0220.

(c) A dimensioned site plan of the proposed initial system, the reserve area and those areas immediately adjacent that contain characteristics impacting design including:

(i) Designated areas for the proposed initial system and the reserve area;

(ii) The location of all soil logs and other soil tests for the OSS;

(iii) General topography and/or slope;

(iv) Drainage characteristics;

(v) The location of existing and proposed encumbrances affecting system placement, including legal access documents if any component of the OSS is not on the lot where the sewage is generated; and

(vi) An arrow indicating north.

(d) A detailed system design meeting the requirements under WAC 246-272A-0230, 246-272A-0232, 246-272A-0234, and 246-272A-0238 including:

(i) A drawing showing the dimensioned location of components of the proposed OSS, and the system designed for the reserve area if reserve site characteristics differ significantly from the initial area;

(ii) Vertical cross-section drawings showing:

(A) The depth of the soil dispersal component, the vertical separation, and depth of cover material; and

(B) Other new OSS components constructed at the site.

(iii) Calculations and assumptions supporting the proposed design, including:

(A) System operating capacity and design flow;

(B) Soil type; and

(C) Hydraulic loading rate in the soil dispersal component; and

(e) Any additional information as deemed necessary by the local health officer.

(2) A permit is not required for replacement, addition, or modification of broken or malfunctioning building sewers, risers and lids, sewage tank lids, sewage tank baffles, sewage tank pumps, pump control floats, pipes connecting multiple sewage tanks, and OSS inspection boxes and ports where a sewage tank, treatment component, or soil dispersal component does not need to be replaced. The local health officer may require the owner to submit information regarding these activities for recordkeeping purposes.

(3) The local health officer may develop the information required in subsection (1) of this section if authorized by local regulations.

(4) The local health officer shall:

(a) Respond to an application within thirty days as required in RCW 70.05.074.

(b) Permit only public domain technologies that have departmental RS&G. Permit only proprietary products that are registered by the department. During the period of transition from the list of approved systems and products to the registered list, the local health officer may permit products on the list of approved systems and products.

(c) Issue a permit when the information submitted under subsection (1) of this section meets the requirements contained in this chapter and in local regulations;

(d) Identify the permit as a new installation, repair, expansion, modification, or operational permit;

(e) Specify the expiration date on the permit. The expiration date may not exceed five years from the date of permit issuance;

(f) Include a reminder on the permit application of the applicant's right of appeal; and

(g) If requiring an operational permit, state the period of validity and the date and conditions of renewal.

(5) The local health officer may revoke or deny a permit for just cause. Examples include, but are not limited to:

(a) Construction or continued use of an OSS that threatens the public health;

(b) Misrepresentation or concealment of material fact in information submitted to the local health officer; or

(c) Failure to meet conditions of the permit, this chapter or any local regulations.

(6) Before the local health officer issues a permit for the installation of an OSS to serve more than one development, the applicant shall show:

(a) An approved public entity owning or managing the OSS in perpetuity; or

(b) A management arrangement acceptable to the local health officer, recorded in covenant, lasting until the on-site system is no longer needed, and containing, but not limited to:

(i) A recorded easement allowing access for construction, operation, monitoring maintenance, and repair of the OSS; and

(ii) Identification of an adequate financing mechanism to assure the funding of operation, maintenance, and repair of the OSS.

(7) The local health officer shall not delegate the authority to issue permits.

(8) The local health officer may stipulate additional requirements for a particular permit if necessary for public health protection.

[Statutory Authority: RCW 43.20.050. 05-15-119, § 246-272A-0200, filed 7/18/05, effective 7/1/07.]

WAC 246-272A-0210 Location. (1) Persons shall design and install OSS to meet the minimum horizontal separations shown in Table IV, Minimum Horizontal Separations:

Table IV
Minimum Horizontal Separations

Items Requiring Setback	From edge of soil dispersal component and reserve area	From sewage tank and distribution box	From building sewer, and nonperforated distribution pipe
Well or suction line	100 ft.	50 ft.	50 ft.
Public drinking water well	100 ft.	100 ft.	100 ft.
Public drinking water spring measured from the ordinary high-water mark	200 ft.	200 ft.	100 ft.
Spring or surface water used as drinking water source measured from the ordinary high-water mark[1]	100 ft.	50 ft.	50 ft.
Pressurized water supply line	10 ft.	10 ft.	10 ft.
Decommissioned well (decommissioned in accordance with chapter 173-160 WAC)	10 ft.	N/A	N/A
Surface water measured from the ordinary high-water mark	100 ft.	50 ft.	10 ft.
Building foundation/in-ground swimming pool	10 ft.	5 ft.	2 ft.
Property or easement line	5 ft.	5 ft.	N/A
Interceptor/curtain drains/foundation drains/drainage ditches			
Down-gradient[2]:	30 ft.	5 ft.	N/A

Items Requiring Setback	From edge of soil dispersal component and reserve area	From sewage tank and distribution box	From building sewer, and nonperforated distribution pipe
Up-gradient[2]:	10 ft.	N/A	N/A
Other site features that may allow effluent to surface			
Down-gradient[2]:	30 ft.	5 ft.	N/A
Up-gradient[2]:	10 ft.	N/A	N/A
Down-gradient cuts or banks with at least 5 ft. of original, undisturbed soil above a restrictive layer due to a structural or textural change	25 ft.	N/A	N/A
Down-gradient cuts or banks with less than 5 ft. of original, undisturbed soil above a restrictive layer due to a structural or textural change	50 ft.	N/A	N/A
Other adjacent soil dispersal components/subsurface storm water infiltration systems	10 ft.	N/A	N/A

[1] If surface water is used as a public drinking water supply, the designer shall locate the OSS outside of the required source water protection area.

[2] The item is down-gradient when liquid will flow toward it upon encountering a water table or a restrictive layer. The item is up-gradient when liquid will flow away from it upon encountering a water table or restrictive layer.

(2) If any condition indicates a greater potential for contamination or pollution, the local health officer may increase the minimum horizontal separations. Examples of such conditions include excessively permeable soils, unconfined aquifers, shallow or saturated soils, dug wells, and improperly abandoned wells.

(3) The local health officer may allow a reduced horizontal separation to not less than two feet where the property line, easement line, in-ground swimming pool, or building foundation is up-gradient.

(4) The horizontal separation between an OSS dispersal component and an individual water well, individual spring, or surface water that is not a public water source can be reduced to a minimum of seventy-five feet, by the local health officer, and be described as a conforming system upon signed approval by the health officer if the applicant demonstrates:

(a) Adequate protective site-specific conditions, such as physical settings with low hydro-geologic susceptibility from contaminant infiltration. Examples of such conditions include evidence of confining layers and/or aquatards separating potable water from the OSS treatment zone, excessive depth to ground water, down-gradient contaminant source, or outside the zone of influence; or

(b) Design and proper operation of an OSS system assuring enhanced treatment performance beyond that accomplished by meeting the vertical separation and effluent distribution requirements described in WAC 246-272A-0230 Table VI; or

(c) Evidence of protective conditions involving both (a) and (b) of this subsection.

(5) Persons shall design and/or install a soil dispersal component only if:

(a) The slope is less than forty-five percent (twenty-four degrees);

(b) The area is not subject to:

(i) Encroachment by buildings or construction such as placement of power poles and underground utilities;

(ii) Cover by impervious material;

(iii) Vehicular traffic; or

(iv) Other activities adversely affecting the soil or the performance of the OSS.

(c) Sufficient reserve area for replacement exists to treat and dispose one hundred percent of the design flow;

(d) The land is stable; and

(e) Surface drainage is directed away from the site.

(6) The local health officer may approve a sewer transport line within ten feet of a water supply line if the sewer line is constructed in accordance with section C1-9 of the department of ecology's "*Criteria For Sewage Works Design*," December 1998.

[Statutory Authority: RCW 43.20.050. 05-15-119, § 246-272A-0210, filed 7/18/05, effective 7/1/07.]

WAC 246-272A-0220 Soil and site evaluation. (1) Only professional engineers, designers, or local health officers may perform soil and site evaluations. Soil scientists may only perform soil evaluations.

(2) The person evaluating the soil and site shall:

(a) Report:

(i) A sufficient number of soil logs to evaluate conditions within:

(A) The initial soil dispersal component; and

(B) The reserve area.

(ii) The ground water conditions, the date of the observation, and the probable maximum height;

(iii) The topography of the proposed initial system, the reserve area, and those areas immediately adjacent that contain characteristics impacting the design;

(iv) The drainage characteristics of the proposed initial system, the reserve area and those areas immediately adjacent that contain characteristics impacting the design;

(v) The existence of structurally deficient soils subject to major wind or water erosion events such as slide zones and dunes;

(vi) The existence of designated flood plains and other areas identified in the local management plan required in WAC 246-272A-0015; and

(vii) The location of existing features affecting system placement, such as, but not limited to:

(A) Wells and suction lines;

(B) Water sources and supply lines;

(C) Surface water and stormwater infiltration areas;

(D) Abandoned wells;

(E) Outcrops of bedrock and restrictive layers;

(F) Buildings;

(G) Property lines and lines of easement;

(H) Interceptors such as footing drains, curtain drains, and drainage ditches;

(I) Cuts, banks, and fills;

(J) Driveways and parking areas;

(K) Existing OSS; and

(L) Underground utilities;

(b) Use the soil and site evaluation procedures and terminology in accordance with Chapter 5 of the *On-site Wastewater Treatment Systems Manual*, EPA 625/R-00/008, February 2002 except where modified by, or in conflict with, this chapter (available upon request to the department);

(c) Use the soil names and particle size limits of the United States Department of Agriculture Natural Resources Conservation Service classification system;

(d) Determine texture, structure, compaction and other soil characteristics that affect the treatment and water movement potential of the soil by using normal field and/or laboratory procedures such as particle size analysis; and

(e) Classify the soil as in Table V, Soil Type Descriptions:

TABLE V
Soil Type Descriptions

Soil Type	Soil Textural Classifications
1	Gravelly and very gravelly coarse sands, all extremely gravelly soils excluding soil types 5 and 6, all soil types with greater than or equal to 90% rock fragments.
2	Coarse sands.
3	Medium sands, loamy coarse sands, loamy medium sands.
4	Fine sands, loamy fine sands, sandy loams, loams.
5	Very fine sands, loamy very fine sands; or silt loams, sandy clay loams, clay loams and silty clay loams with a moderate or strong structure (excluding platy structure).
6	Other silt loams, sandy clay loams, clay loams, silty clay loams.
7 Unsuitable for treatment or dispersal	Sandy clay, clay, silty clay, strongly cemented or firm soils, soil with a moderate or strong platy structure, any soil with a massive structure, any soil with appreciable amounts of expanding clays.

(3) The owner of the property or his agent shall:

(a) Prepare the soil log excavation to:

(i) Allow examination of the soil profile in its original position by:

(A) Excavating pits of sufficient dimensions to enable observation of soil characteristics by visual and tactile means to a depth three feet deeper than the anticipated infiltrative surface at the bottom of the soil dispersal component; or

(B) Stopping at a shallower depth if a water table or restrictive layer is encountered;

(ii) Allow determination of the soil's texture, structure, color, bulk density or compaction, water absorption capabilities or permeability, and elevation of the highest seasonal water table; and

(b) Assume responsibility for constructing and maintaining the soil log excavation in a manner to prevent injury as required by chapter 296-155 WAC.

(4) The local health officer:

(a) Shall render a decision on the height of the water table within twelve months of receiving the application under precipitation conditions typical for the region;

(b) May require water table measurements to be recorded during months of probable high-water table conditions, if insufficient information is available to determine the highest seasonal water table;

(c) May require any other soil and site information affecting location, design, or installation; and

(d) May reduce the required number of soil logs for OSS serving a single-family residence if adequate soils information has previously been developed.

[Statutory Authority: RCW 43.20.050. 05-15-119, § 246-272A-0220, filed 7/18/05, effective 7/1/07.]

WAC 246-272A-0230 Design requirements—General. (1) On-site sewage systems may only be designed by professional engineers, licensed under chapter 18.43 RCW or on-site sewage treatment system designers, licensed under chapter 18.210 RCW, except:

(a) If at the discretion of the local health officer, a resident owner of a single-family residence not adjacent to a marine shoreline is allowed to design a system for that residence; or

(b) If the local health officer performs the soil and site evaluation, the health officer is allowed to design a system.

(2) The designer shall use the following criteria when developing a design for an OSS:

(a) All sewage from the building served is directed to the OSS;

(b) Sewage tanks have been reviewed and approved by the department;

(c) Drainage from the surface, footing drains, roof drains, subsurface stormwater infiltration systems, and other nonsewage drains is prevented from entering the OSS, the area where the OSS is located, and the reserve area;

(d) The OSS is designed to treat and disperse the sewage volume as follows:

(i) For single-family residences:

(A) The operating capacity is based on 45 gpd per capita with two people per bedroom.

(B) The minimum design flow per bedroom per day is the operating capacity of ninety gallons multiplied by 1.33.

This results in a minimum design flow of one hundred twenty gallons per bedroom per day.

(C) A factor greater than 0.33 to account for surge capacity may be required by the local health officer.

(D) The local health officer may require an increase of the design flow for dwellings with anticipated greater flows, such as larger dwellings.

(E) The minimum design flow is two hundred forty gallons per day.

(ii) For other facilities, the design flows noted in "*Onsite Wastewater Treatment Systems Manual*," USEPA, EPA-625/R-00/008, February 2002 (available upon request to the department) shall be used. Sewage flows from other sources of information may be used in determining system design flows if they incorporate both an operating capacity and a surge capacity.

(e) The OSS is designed to address sewage quality as follows:

(i) For all systems, the designer shall consider:

(A) $CBOD_5$, TSS, and O&G;

(B) Other parameters that can adversely affect treatment anywhere along the treatment sequence. Examples include pH, temperature and dissolved oxygen;

(C) The sensitivity of the site where the OSS will be installed. Examples include areas where fecal coliform constituents can result in public health concerns, such as shellfish growing areas, designated swimming areas, and other areas identified by the local management plan required in WAC 246-272A-0015.

(D) Nitrogen contributions. Where nitrogen has been identified as a contaminant of concern by the local management plan required in WAC 246-272A-0015, it shall be addressed through lot size and/or treatment.

(ii) For OSS treating sewage from a nonresidential source, the designer shall provide the following information:

(A) Information to show the sewage is not industrial wastewater;

(B) Information regarding the sewage quality and identifying chemicals found in the sewage that are not found in sewage from a residential source; and

(C) A site-specific design providing the treatment level equal to that required of sewage from a residential source;

(f) The vertical separation to be used to establish the treatment levels and application rates. The selected vertical separation shall be used consistently throughout the design process.

(g) Treatment levels:

(i) Requirements for matching treatment component and method of distribution with soil conditions of the soil dispersal component are listed in Table VI. The treatment levels correspond with those established for treatment components under the product performance testing requirements in Table III of WAC 246-272A-0110. The method of distribution applies to the soil dispersal component.

(ii) Disinfection may not be used to achieve the fecal coliform requirements to meet:

(A) Treatment levels A or B in Type 1 soils; or

(B) Treatment level C.

TABLE VI
Treatment Component Performance Levels and Method of Distribution[1]

Vertical Separation in inches	Soil Type		
	1	2	3-6
12 < 18	A - pressure with timed dosing	B - pressure with timed dosing	B - pressure with timed dosing
≥18 < 24	B - pressure with timed dosing	B - pressure with timed dosing	B - pressure with timed dosing
≥24 < 36	B - pressure with timed dosing	C - pressure	E - pressure
≥36 < 60	B - pressure with timed dosing	E - pressure	E - gravity
≥60	C - pressure	E - gravity	E - gravity

[1] The treatment component performance levels correspond with those established for treatment components under the product testing requirements in WAC 246-272A-0110.

(3) The coarsest textured soil within the vertical separation selected by the designer shall determine the minimum treatment level and method of distribution.

(4) The local health officer shall not approve designs for:

(a) Cesspools; or

(b) Seepage pits.

(5) The local health officer may approve a design for the reserve area different from the design approved for the initial OSS, if both designs meet the requirements of this chapter for new construction.

[Statutory Authority: RCW 43.20.050. 05-15-119, § 246-272A-0230, filed 7/18/05, effective 7/1/07.]

WAC 246-272A-0232 Design requirements—Septic tank sizing. Septic tanks shall:

(1) Have at least two compartments with the first compartment liquid volume equal to one-half to two-thirds of the total liquid volume. This standard may be met by one tank with two compartments or by two single compartment tanks in series.

(2) Have the following minimum liquid volumes:

(a) For a single family residence use Table VII, Required Minimum Liquid Volumes of Septic Tanks:

TABLE VII
Required Minimum Liquid Volumes of Septic Tanks

Number of Bedrooms	Required Minimum Liquid Tank Volume in Gallons
≤3	900
4	1000
Each additional bedroom	250

(b) For OSS treating sewage from a residential source, other than one single-family residence, two hundred fifty gallons per bedroom with a minimum of one thousand gallons;

(c) For OSS treating sewage from a nonresidential source, three times the design flow.

[Statutory Authority: RCW 43.20.050. 05-15-119, § 246-272A-0232, filed 7/18/05, effective 7/1/07.]

WAC 246-272A-0234 Design requirements—Soil dispersal components. (1) All soil dispersal components, except one using a subsurface dripline product, shall be designed to meet the following requirements:

(a) Maximum hydraulic loading rates shall be based on the rates described in Table VIII;

TABLE VIII
Maximum Hydraulic Loading Rate

Soil Type	Soil Textural Classification Description	Loading Rate for Residential Effluent Using Gravity or Pressure Distribution gal./sq. ft./day
1	Gravelly and very gravelly coarse sands, all extremely gravelly soils excluding soil types 5 & 6, all soil types with greater than or equal to 90% rock fragments.	1.0
2	Coarse sands.	1.0
3	Medium sands, loamy coarse sands, loamy medium sands.	0.8
4	Fine sands, loamy fine sands, sandy loams, loams.	0.6
5	Very fine sands, loamy very fine sands; or silt loams, sandy clay loams, clay loams and silty clay loams with a moderate structure or strong structure (excluding a platy structure).	0.4
6	Other silt loams, sandy clay loams, clay loams, silty clay loams.	0.2
7	Sandy clay, clay, silty clay and strongly cemented firm soils, soil with a moderate or strong platy structure, any soil with a massive structure, any soil with appreciable amounts of expanding clays.	Not suitable

(b) Calculation of the absorption area is based on:

(i) The design flow in WAC 246-272A-0230(2); and

(ii) Loading rates equal to or less than those in Table VIII applied to the infiltrative surface of the soil dispersal component or the finest textured soil within the vertical separation selected by the designer, whichever has the finest texture.

(c) Requirements for the method of distribution shall correspond to those in Table VI.

(d) Soil dispersal components having daily design flow between one thousand and three thousand five hundred gallons of sewage per day shall:

(i) Only be located in soil types 1-5;

(ii) Only be located on slopes of less than thirty percent, or seventeen degrees; and

(iii) Have pressure distribution including time dosing.

(2) All soil dispersal components using a subsurface dripline product must be designed to meet the following requirements:

(a) Calculation of the absorption area is based on:

(i) The design flow in WAC 246-272A-0230(2);

(ii) Loading rates that are dependent on the soil type, other soil and site characteristics, and the spacing of dripline and emitters;

(b) The dripline must be installed a minimum of six inches into original, undisturbed soil;

(c) Timed dosing; and

(d) Soil dispersal components having daily design flows greater than one thousand gallons of sewage per day may:

(i) Only be located in soil types 1-5;

(ii) Only be located on slopes of less than thirty percent, or seventeen degrees.

(3) All SSAS shall meet the following requirements:

(a) The infiltrative surface may not be deeper than three feet below the finished grade, except under special conditions approved by the local health officer. The depth of such system shall not exceed ten feet from the finished grade;

(b) A minimum of six inches of sidewall must be located in original undisturbed soil;

(c) Beds are only designed in soil types 1, 2, 3 or in fine sands with a width not exceeding ten feet;

(d) Individual laterals greater than one hundred feet in length must use pressure distribution;

(e) A layer of between six and twenty-four inches of cover material; and

(f) Other features shall conform with the "*On-site Wastewater Treatment Systems Manual*," United States Environmental Protection Agency EPA-625/R-00/008 February 2002 (available upon request to the department) except where modified by, or in conflict with this section or local regulations.

(4) For SSAS with drainrock and distribution pipe:

(a) A minimum of two inches of drainrock is required above the distribution pipe;

(b) The sidewall below the invert of the distribution pipe is located in original undisturbed soil.

(5) The local health officer may allow the infiltrative surface area in a SSAS to include six inches of the SSAS sidewall height when meeting the required absorption area where total recharge by annual precipitation and irrigation is less than twelve inches per year.

(6) The local health officer may permit systems consisting solely of a septic tank and a gravity SSAS in soil type 1 if all the following criteria are met:

(a) The system serves a single-family residence;

(b) The lot size is greater than two and one-half acres;

(c) Annual precipitation in the region is less than twenty-five inches per year as described by "*Washington Climate*" published jointly by the Cooperative Extension Service, College of Agriculture, and Washington State University (available for inspection at Washington state libraries);

(d) The system is located outside the twelve counties bordering Puget Sound; and

(e) The geologic conditions beneath the dispersal component must satisfy the minimum unsaturated depth requirements to ground water as determined by the local health officer. The method for determination is described by "*Design Guideline for Gravity Systems in Soil Type 1*" (available upon request to the department).

(7) The local health officer may increase the loading rate in Table VIII up to a factor of two for soil types 1-4 and up to a factor of 1.5 for soil types 5 and 6 if a product tested to meet treatment level D is used. This reduction may not be combined with any other SSAS size reductions.

(8)(a) The primary and reserve areas must be sized to at least one hundred percent of the loading rates listed in Table VIII.

(b) However, the local health officer may allow a legal lot of record created prior to the effective date of this chapter that cannot meet this primary and reserve area requirement to be developed if all the following conditions are met:

(i) The lot cannot meet the minimum primary and reserve area requirements due to the loading rates for medium sand, fine sand and very fine sand listed in Table VIII of this chapter;

(ii) The primary and reserve areas are sufficient to allow installation of a SSAS using maximum loading rates of 1.0 gallons/square foot per day for medium sand, 0.8 gallons/square foot/day for fine sand, and 0.6 gallons/square foot/day for very fine sand; and

(iii) A treatment product meeting at least Treatment Level D and pressure distribution with timed-dosing is used.

[Statutory Authority: RCW 43.20.050. 05-15-119, § 246-272A-0234, filed 7/18/05, effective 7/1/07.]

WAC 246-272A-0238 Design requirements—Facilitate operation, monitoring and maintenance. (1) The OSS must be designed to facilitate operation, monitoring and maintenance according to the following criteria:

(a) For gravity systems, septic tank access for maintenance and inspection at finished grade is required. If effluent filters are used, access to the filter at finished grade is required. The local health officer may allow access for maintenance and inspection of a system consisting of a septic tank and gravity flow SSAS to be a maximum of six inches below finished grade provided a marker showing the location of the tank access is installed at finished grade.

(b) For all other systems, service access and monitoring ports at finished grade are required for all system components. Specific component requirements include:

(i) Septic tanks must have service access manholes and monitoring ports for the inlet and outlet. If effluent filters are used, access to the filter at finished grade is required;

(ii) Surge, flow equalization or other sewage tanks must have service access manholes;

(iii) Other pretreatment units (such as aerobic treatment units and packed-bed filters) must have service access manholes and monitoring ports;

(iv) Pump chambers, tanks and vaults must have service access manholes;

(v) Disinfection units must have service access and be installed to facilitate complete maintenance and cleaning; and

(vi) Soil dispersal components shall have monitoring ports for both distribution devices and the infiltrative surface.

(c) For systems using pumps, clearly accessible controls and warning devices are required including:

(i) Process controls such as float and pressure activated pump on/off switches, pump-run timers and process flow controls;

(ii) Diagnostic tools including dose cycle counters and hour meters on the sewage stream, or flow meters on either the water supply or sewage stream; and

(iii) Audible and visual alarms designed to alert a resident of a malfunction. The alarm must be placed on a circuit independent of the pump circuit.

(2) All accesses must be designed to allow for monitoring and maintenance and shall be secured to minimize injury or unauthorized access in a manner approved by the local health officer.

[Statutory Authority: RCW 43.20.050. 05-15-119, § 246-272A-0238, filed 7/18/05, effective 7/1/07.]

WAC 246-272A-0240 Holding tank sewage systems. (1) A person may not install or use holding tank sewage systems for residential development or expansion of residences, whether seasonal or year-round, except as set forth under subsection (2) of this section.

(2) The local health officer may approve installation of holding tank sewage systems only:

(a) For permanent uses limited to controlled, part-time, commercial usage situations, such as recreational vehicle parks and trailer dump stations;

(b) For interim uses limited to handling of emergency situations; or

(c) For repairs as permitted under WAC 246-272A-0280 (1)(c)(i).

(3) A person proposing to use a holding tank sewage system shall:

(a) Follow design criteria established by the department;

(b) Submit a management program to the local health officer assuring ongoing operation, monitoring and maintenance before the local health officer issues the installation permit; and

(c) Use a holding tank reviewed and approved by the department.

[Statutory Authority: RCW 43.20.050. 05-15-119, § 246-272A-0240, filed 7/18/05, effective 7/1/07.]

WAC 246-272A-0250 Installation. (1) Only installers may construct OSS, except as noted under subsection (2) of this section.

(2) The local health officer may allow the resident owner of a single-family residence not adjacent to a marine shoreline to install the OSS for that single-family residence.

(3) The installer described by either subsection (1) or (2) of this section shall:

(a) Follow the approved design;

(b) Have the approved design in possession during installation;

(c) Make no changes to the approved design without the prior authorization of the designer and the local health officer;

(d) Only install septic tanks, pump chambers, and holding tanks approved by the department;

(e) Be on the site at all times during the excavation and construction of the OSS;

(f) Install the OSS to be watertight, except for the soil dispersal component;

(g) Cover the installation only after the local health officer has given approval to cover; and

(h) Back fill with six to twenty-four inches of cover material and grade the site to prevent surface water from accumulating over any component of the OSS.

[Statutory Authority: RCW 43.20.050. 05-15-119, § 246-272A-0250, filed 7/18/05, effective 7/1/07.]

WAC 246-272A-0260 Inspection. (1) For all activities requiring a permit, the local health officer shall:

(a) Visit the OSS site during the site evaluation, construction, or final construction inspection;

(b) Either inspect the OSS before cover or allow the designer of the OSS to perform the inspection before cover if the designer is not also named as installer of the system.

(c) Keep the record drawings on file, with the approved design documents.

(2) The person responsible for the final construction inspection shall assure the OSS meets the approved design.

[Statutory Authority: RCW 43.20.050. 05-15-119, § 246-272A-0260, filed 7/18/05, effective 7/1/07.]

WAC 246-272A-0265 Record drawings. Upon completion of the new construction, alteration or repair of the OSS, a complete and detailed record drawing shall be submitted to both the health officer and the OSS owner that includes at a minimum the following:

(1) Measurements and directions accurate to +/- 1/2 foot, unless otherwise determined by the local health officer, to assure the following parts of the OSS can be easily located:

(a) All sewage tank openings requiring access;

(b) The ends, and all changes in direction, of installed and found buried pipes and electrical cables that are part of the OSS; and

(c) Any other OSS component which, in the judgment of the health officer or the designer, must be accessed for observation, maintenance, or operation;

(2) Location and dimensions of reserve area;

(3) Record that materials and equipment meet the specifications contained in the design;

(4) Initial settings of electrical or mechanical devices that must be known to operate the system in the manner intended by the designer or installer; and

(5) For proprietary products, manufacturer's standard product literature, including performance specifications and maintenance recommendations needed for operation, monitoring, maintenance or repair of the OSS.

[Statutory Authority: RCW 43.20.050. 05-15-119, § 246-272A-0265, filed 7/18/05, effective 7/1/07.]

WAC 246-272A-0270 Operation, monitoring, and maintenance—Owner responsibilities. (1) The OSS owner is responsible for operating, monitoring, and maintaining the OSS to minimize the risk of failure, and to accomplish this purpose, shall:

(a) Obtain approval from the local health officer before repairing, altering or expanding an OSS;

(b) Secure and renew contracts for periodic maintenance where required by the local health jurisdiction;

(c) Obtain and renew operation permits if required by the local health jurisdiction;

(d) Assure a complete evaluation of the system components and/or property to determine functionality, maintenance needs and compliance with regulations and any permits:

(i) At least once every three years for all systems consisting solely of a septic tank and gravity SSAS;

(ii) Annually for all other systems unless more frequent inspections are specified by the local health officer;

(e) Employ an approved pumper to remove the septage from the tank when the level of solids and scum indicates that removal is necessary;

(f) Provide maintenance and needed repairs to promptly return the system to a proper operating condition;

(g) Protect the OSS area and the reserve area from:

(i) Cover by structures or impervious material;

(ii) Surface drainage, and direct drains, such as footing or roof drains. The drainage must be directed away from the area where the OSS is located;

(iii) Soil compaction, for example by vehicular traffic or livestock; and

(iv) Damage by soil removal and grade alteration;

(h) Keep the flow of sewage to the OSS at or below the approved operating capacity and sewage quality;

(i) Operate and maintain systems as directed by the local health officer;

(j) Request assistance from the local health officer upon occurrence of a system failure or suspected system failure; and

(k) At the time of property transfer, provide to the buyer, maintenance records, if available, in addition to the completed seller disclosure statement in accordance with chapter 64.06 RCW for residential real property transfers.

(2) Persons shall not:

(a) Use or introduce strong bases, acids or chlorinated organic solvents into an OSS for the purpose of system cleaning;

(b) Use a sewage system additive unless it is specifically approved by the department; or

(c) Use an OSS to dispose of waste components atypical of sewage from a residential source.

[Statutory Authority: RCW 43.20.050. 05-15-119, § 246-272A-0270, filed 7/18/05, effective 7/1/07.]

WAC 246-272A-0275 Operation, monitoring, and maintenance—Food service establishments. The local health officer shall require annual inspections of OSS serving food service establishments and may require pumping as needed.

[Statutory Authority: RCW 43.20.050. 05-15-119, § 246-272A-0275, filed 7/18/05, effective 7/1/07.]

WAC 246-272A-0280 Repair of failures. (1) When an OSS failure occurs, the OSS owner shall:

(a) Repair or replace the OSS with a conforming system or component, or a system meeting the requirements of Table IX either on the:

(i) Property served; or

(ii) Nearby or adjacent property if easements are obtained; or

(b) Connect the residence or facility to a:

(i) Publicly owned LOSS;

(ii) Privately owned LOSS where it is deemed economically feasible; or

(iii) Public sewer; or

(c) Perform one of the following when requirements in (a) and (b) of this subsection are not feasible:

(i) Use a holding tank; or

(ii) Obtain a National Pollution Discharge Elimination System or state discharge permit from the Washington state department of ecology issued to a public entity or jointly to a public entity and the system owner only when the local health officer determines:

(A) An OSS is not feasible; and

(B) The only realistic method of final dispersal of treated effluent is discharge to the surface of the land or into surface water; or

(iii) Abandon the property.

(2) Prior to repairing the soil dispersal component, the OSS owner shall develop and submit information required under WAC 246-272A-0200(1).

(3) The local health officer shall permit a system that meets the requirements of Table IX only if the following are not feasible:

(a) Installation of a conforming system or component; and

(b) Connection to either an approved LOSS or a public sewer.

(4) The person responsible for the design shall locate and design repairs to:

(a) Meet the requirements of Table IX if the effluent treatment and soil dispersal component to be repaired or replaced is closer to any surface water, well, or spring than prescribed by the minimum separation required in Table IV of WAC 246-272A-0210(1). Pressure distribution with timed dosing in the soil dispersal component is required in all cases where a conforming system is not feasible.

TABLE IX
Treatment Component Performance Levels for Repair of OSS Not Meeting Vertical and Horizontal Separations[1]

Vertical Separation (in inches)	Horizontal Separation[2]											
	< 25 feet			25 < 50 feet			50 < 100 feet[3]			≥100 feet		
	Soil Type			Soil Type			Soil Type			Soil Type		
	1	2	3-6	1	2	3-6	1	2	3-6	1	2	3-6
< 12	A	A	A	A	A	A	A	A	B	B	B	B
≥ 12 < 18	A	A	A	A	B	B	A	B	B	Conforming Systems		
≥ 18 < 24	A	A	A	A	B	B	A	B	C			
≥ 24 < 36	A	B	B	B	C	C	B	C	C			
≥ 36	A	B	B	B	C	C	B	C	E			

[1] The treatment component performance levels correspond with those established for treatment components under the product performance testing requirements in Table III of WAC 246-272A-0110.

[2] The horizontal separation indicated in Table IX is the distance between the soil dispersal component and the surface water, well, or spring. If the soil dispersal component is up-gradient of a surface water, well, or spring to be used as a potable water source, or beach where shellfish are harvested, the next higher treatment level shall apply unless treatment level A is already required.

[3] On a site where there is a horizontal setback of 75 - 100 feet between an OSS dispersal component and an individual water well, individual spring, nonmarine surface water or surface water that is not a public water source and a vertical separation of greater than twelve inches, a conforming system that complies with WAC 246-272A-0210(4) shall be installed if feasible.

(b) Protect drinking water sources and shellfish harvesting areas;

(c) Minimize nitrogen discharge in areas where nitrogen has been identified as a contaminant of concern in the local plan under WAC 246-272A-0015;

(d) Prevent the direct discharge of sewage to ground water, surface water, or upon the surface of the ground;

(e) Meet the horizontal separations under WAC 246-272A-0210(1) to public drinking water sources;

(f) Meet other requirements of this chapter to the maximum extent permitted by the site; and

(g) Maximize the:

(i) Vertical separation;

(ii) Distance from a well, spring, or suction line; and

(iii) Distance to surface water.

(5) Prior to designing the repair system, the designer shall consider the contributing factors of the failure to enable the repair to address identified causes.

(6) If the vertical separation is less than twelve inches, the local health officer may permit ASTM C-33 sand or coarser to be used as fill to prevent direct discharge of treated effluent to ground water, surface water, or upon the surface of the ground.

(7) For a repair using the requirements of Table IX, disinfection may not be used to achieve the fecal coliform requirements to meet:

(a) Treatment levels A or B where there is less than eighteen inches of vertical separation;

(b) Treatment levels A or B in type 1 soils; or

(c) Treatment level C.

(8) The local health officer shall identify repair permits meeting the requirements of Table IX for the purpose of tracking future performance.

(9) An OSS owner receiving a repair permit for a system meeting the requirements of Table IX from the local health officer shall:

(a) Immediately report any failure to the local health officer;

(b) Comply with all local and state requirements stipulated on the permit.

[Statutory Authority: RCW 43.20.050. 05-15-119, § 246-272A-0280, filed 7/18/05, effective 7/1/07.]

WAC 246-272A-0290 Expansions. (1) The local health officer shall require an OSS and a reserve area in full compliance with the new system construction standards specified in this chapter for an expansion of a residence or other facility.

(2) A local health officer may allow expansion of an existing on-site sewage system adjacent to a marine shoreline that does not meet the minimum horizontal separation between the soil dispersal component and the ordinary high-water mark required by WAC 246-272A-0210, Table IV, provided that:

(a) The system meets all requirements of WAC 246-272A-0230, 246-272A-0232, 246-272A-0234, and 246-272A-0238;

(b) The system complies with all other requirements of WAC 246-272A-0210 and this section;

(c) Horizontal separation between the soil dispersal component and the ordinary high-water mark is fifty feet or greater; and

(d) Vertical separation is two feet or greater.

[Statutory Authority: RCW 43.20.050. 05-15-119, § 246-272A-0290, filed 7/18/05, effective 7/1/07.]

WAC 246-272A-0300 Abandonment. Persons permanently abandoning a septic tank, seepage pit, cesspool, or other sewage container shall:

(1) Have the septage removed by an approved pumper;

(2) Remove or destroy the lid; and

(3) Fill the void with soil or gravel.

[Statutory Authority: RCW 43.20.050. 05-15-119, § 246-272A-0300, filed 7/18/05, effective 7/1/07.]

WAC 246-272A-0310 Septage management. (1) The local health officer shall approve an individual before they may remove septage from an OSS.

(2) Persons removing septage from an OSS shall:

(a) Transport septage or sewage only in vehicles clearly identified with the name of the business and approved by the local health officer;

(b) Record and report septage removal as required by the local health officer; and

(c) Dispose of septage, or apply septage biosolids to land only in a manner consistent with applicable laws.

[Statutory Authority: RCW 43.20.050. 05-15-119, § 246-272A-0310, filed 7/18/05, effective 7/1/07.]

WAC 246-272A-0320 Developments, subdivisions, and minimum land area requirements. (1) A person proposing a subdivision where the use of OSS is planned shall obtain a recommendation for approval from the local health officer as required by RCW 58.17.150.

(2) The local health officer shall require the following prior to approving any development:

(a) Site evaluations as required under WAC 246-272A-0220, excluding subsections (3)(a)(i) and (4)(d);

(b) Where a subdivision with individual wells is proposed:

(i) Configuration of each lot to allow a one hundred-foot radius water supply protection zone to fit within the lot lines; or

(ii) Establishment of a one hundred-foot protection zone around each existing and proposed well site;

(c) Where preliminary approval of a subdivision is requested, provision of at least one soil log per proposed lot, unless the local health officer determines existing soils information allows fewer soil logs;

(d) Determination of the minimum lot size or minimum land area required for the development using Method I and/or Method II:

METHOD I. Table X, Single-Family Residence Minimum Lot Size or Minimum Land Area Required Per Unit Volume of Sewage, shows the minimum lot size required per single-family residence. For developments other than single-family residences, the minimum land areas shown are required for each unit volume of sewage. However, the local health officer may require larger lot sizes where the local health officer has identified nitrogen as a concern either through planning activities described in WAC 246-272A-0015 or another process.

TABLE X
Minimum Land Area Requirement
Single-Family Residence or Unit Volume of Sewage

Type of Water Supply	Soil Type (defined by WAC 246-272A-0220)					
	1	2	3	4	5	6
Public	0.5 acre 2.5 acre[1]	12,500 sq. ft.	15,000 sq. ft.	18,000 sq. ft.	20,000 sq. ft.	22,000 sq. ft.
Individual, on each lot	1.0 acre 2.5 acres[1]	1 acre	1 acre	1 acre	2 acres	2 acres

[1] See WAC 246-272A-0234(6).

METHOD II. A minimum land area proposal using Method II is acceptable only when the applicant:

(i) Justifies the proposal through a written analysis of the:

(A) Soil type and depth;

(B) Area drainage, and/or lot drainage;

(C) Public health impact on ground and surface water quality;

(D) Setbacks from property lines, water supplies, etc.;

(E) Source of domestic water;

(F) Topography, geology, and ground cover;

(G) Climatic conditions;

(H) Availability of public sewers;

(I) Activity or land use, present, and anticipated;

(J) Growth patterns;

(K) Reserve areas for additional subsurface treatment and dispersal;

(L) Anticipated sewage volume;

(M) Compliance with current planning and zoning requirements;

(N) Types of proposed systems or designs, including the use of systems designed for removal of nitrogen;

(O) Existing encumbrances, such as those listed in WAC 246-272A-0200 (1)(c)(v) and 246-272A-0220 (2)(a)(vii); and

(P) Estimated nitrogen loading from OSS effluent to existing ground and surface water;

(Q) Any other information required by the local health officer.

(ii) Shows development with public water supplies having:

(A) At least twelve thousand five hundred square feet lot sizes per single-family residence;

(B) No more than 3.5 unit volumes of sewage per day per acre for developments other than single-family residences; and

(iii) Shows development with individual water supplies having at least one acre per unit volume of sewage; and

(iv) Shows land area under surface water is not included in the minimum land area calculation; and

(e) Regardless of which method is used for determining required minimum lot sizes or minimum land area, submittal to the health officer of information consisting of field data, plans, and reports supporting a conclusion the land area provided is sufficient to:

(i) Install conforming OSS;

(ii) Assure preservation of reserve areas for proposed and existing OSS;

(iii) Properly treat and dispose of the sewage; and

(iv) Minimize public health effects from the accumulation of contaminants in surface and ground water.

(3) The department shall develop guidelines for the application of Method II by (*insert date one year from the effective date*).

(4) The local health officer shall require lot areas of twelve thousand five hundred square feet or larger except when a person proposes:

(a) OSS within the boundaries of a recognized sewer utility having a finalized assessment roll; or

(b) A planned unit development with:

(i) A signed, notarized, and recorded deed covenant restricting any development of lots or parcels above the approved density with the overall density meeting the minimum land area requirements of subsection (2)(d) of this section;

(ii) A public entity responsible for operation and maintenance of the OSS, or a single individual owning the OSS;

(iii) Management requirements under chapter 246-272B WAC when installing a LOSS; and

(iv) Extinguishment of the deed covenant and higher density development allowed only when the development connects to public sewers.

(5) The local health officer may:

(a) Allow inclusion of the area to the centerline of a road or street right of way in a Method II determination under subsection (2)(d) of this section to be included in the minimum land area calculation if:

(i) The dedicated road or street right of ways are along the perimeter of the development;

(ii) The road or street right of ways are dedicated as part of the proposed development; and

(iii) Lots are at least twelve thousand five hundred square feet in size.

(b) Require detailed plot plans and OSS designs prior to final approval of subdivision proposals;

(c) Require larger land areas or lot sizes to achieve public health protection;

(d) Prohibit development on individual lots within the boundaries of an approved subdivision if the proposed OSS design does not protect public health by meeting requirements of these regulations; and

(e) Permit the installation of an OSS, where the minimum land area requirements or lot sizes cannot be met, only when all of the following criteria are met:

(i) The lot is registered as a legal lot of record created prior to the effective date of this chapter;

(ii) The lot is outside an area identified by the local plan developed under WAC 246-272A-0015 where minimum land area has been listed as a design parameter necessary for public health protection; and

(iii) The proposed system meets all requirements of these regulations other than minimum land area.

(6) The use of a reduced-sized SSAS does not provide for a reduction in the minimum land area requirements established in this section. Site development incorporating reduced-sized SSAS must meet the minimum land area requirements established in state and local codes.

[Statutory Authority: RCW 43.20.050. 05-15-119, § 246-272A-0320, filed 7/18/05, effective 7/1/07.]

WAC 246-272A-0340 Certification of installers, pumpers, and maintenance service providers. (1) OSS installers and pumpers must obtain approval from the local health officer prior to providing services within a local health jurisdiction.

(2) Local health officer may establish programs and requirements for approving maintenance service providers.

[Statutory Authority: RCW 43.20.050. 05-15-119, § 246-272A-0340, filed 7/18/05, effective 7/1/07.]

WAC 246-272A-0400 Technical advisory committee. (1) The department shall:

(a) Maintain a technical advisory committee to advise the department regarding:

(i) OSS design and siting;

(ii) Public domain technologies and recommended standards and guidance for their use; and

(iii) Testing and design standards used for proprietary product registration and recommended standards and guidance for use of proprietary products.

(b) Select members for the technical advisory committee with technical or scientific knowledge applicable to OSS from agencies, professions, and organizations including:

(i) Local health departments;

(ii) Engineering firms;

(iii) The department of ecology;

(iv) Land sales, development and building industries;

(v) Public sewer utilities;

(vi) On-site sewage system design and installation firms;

(vii) Environmental organizations;

(viii) University/college academic communities;

(ix) On-site sewage system or related product manufacturers; and

(x) Other interested organizations or groups.

(c) Convene meetings as needed.

(2) The department may have a representative on the technical advisory committee.

[Statutory Authority: RCW 43.20.050. 05-15-119, § 246-272A-0400, filed 7/18/05, effective 9/15/05.]

WAC 246-272A-0410 Policy advisory committee. (1) The department shall:

(a) Maintain a policy advisory committee to:

(i) Make recommendations concerning departmental policy and regulations;

(ii) Review program services; and

(iii) Provide input to the department regarding the on-site sewage program;

(b) Select members from agencies, professions, organizations having knowledge and interest in OSS, and groups which are affected by the regulations; and

(c) Convene meetings as needed.

(2) The department may have a representative on the policy advisory committee.

[Statutory Authority: RCW 43.20.050. 05-15-119, § 246-272A-0410, filed 7/18/05, effective 9/15/05.]

WAC 246-272A-0420 Waiver of state regulations. (1) The local health officer may grant a waiver from specific requirements of this chapter if:

(a) The waiver request is evaluated by the local health officer on an individual, site-by-site basis;

(b) The local health officer determines that the waiver is consistent with the standards in, and the intent of, these rules;

(c) The local health officer submits quarterly reports to the department regarding any waivers approved or denied; and

(d) Based on review of the quarterly reports, if the department finds that the waivers previously granted have not been consistent with the standards in, and the intent of these rules, the department shall provide technical assistance to the local health officer to correct the inconsistency, and may notify the local and state boards of health of the department's concerns. If upon further review of the quarterly reports, the department finds that the inconsistency between the waivers granted and the state board of health standards has not been corrected, the department may suspend the authority of the local health officer to grant waivers under this section until such inconsistencies have been corrected.

(2) The department shall develop guidance to assist local health officers in the application of waivers.

[Statutory Authority: RCW 43.20.050. 05-15-119, § 246-272A-0420, filed 7/18/05, effective 9/15/05.]

WAC 246-272A-0425 Required rule review. The department shall review this chapter to evaluate the effectiveness of the rules and determine areas where revisions may be necessary. The department will provide the results of their review along with their recommendations to the state board of health and all local health officers by September 2009 and every four years thereafter.

[Statutory Authority: RCW 43.20.050. 05-15-119, § 246-272A-0425, filed 7/18/05, effective 9/15/05.]

WAC 246-272A-0430 Enforcement. (1) The department or the local health officer:

(a) Shall enforce the rules of chapter 246-272A WAC; or

(b) May refer cases within their jurisdiction to the local prosecutor's office or office of the attorney general, as appropriate.

(2) When a person violates the provisions under this chapter, the department, local health officer, local prosecutor's office, or office of the attorney general may initiate enforcement or disciplinary actions, or any other legal proceeding authorized by law including, but not limited to, any one or a combination of the following:

(a) Informal administrative conferences, convened at the request of the department or owner, to explore facts and resolve problems;

(b) Orders directed to the owner and/or operator of the OSS and/or person causing or responsible for the violation of the rules of chapter 246-272A WAC;

(c) Denial, suspension, modification, or revocation of permits, approvals, registrations, or certification;

(d) The penalties under chapter 70.05 RCW and RCW 43.70.190; and

(e) Civil or criminal action.

(3) Orders authorized under this section include the following:

(a) Orders requiring corrective measures necessary to effect compliance with chapter 246-272A WAC which may include a compliance schedule; and

(b) Orders to stop work and/or refrain from using any OSS or portion of the OSS or improvements to the OSS until all permits, certifications, and approvals required by rule or statute are obtained.

(4) Enforcement orders issued under this section shall:

(a) Be in writing;

(b) Name the person or persons to whom the order is directed;

(c) Briefly describe each action or inaction constituting a violation of the rules of chapter 246-272A WAC, or applicable local code;

(d) Specify any required corrective action, if applicable;

(e) Specify the effective date of the order, with time or times of compliance;

(f) Provide notice of the consequences of failure to comply or repeated violation, as appropriate. Such notices may include a statement that continued or repeated violation may subject the violator to:

(i) Denial, suspension, or revocation of a permit approval, or certification;

(ii) Referral to the office of the county prosecutor or attorney general; and/or

(iii) Other appropriate remedies.

(g) Provide the name, business address, and phone number of an appropriate staff person who may be contacted regarding an order.

(5) Enforcement orders shall be personally served in the manner of service of a summons in a civil action or in a manner showing proof of receipt.

(6) The department shall have cause to deny the application or reapplication for an operational permit or to revoke, suspend, or modify a required operational permit of any person who has:

(a) Failed or refused to comply with the provisions of chapter 246-272A WAC, or any other statutory provision or rule regulating the operation of an OSS; or

(b) Obtained or attempted to obtain a permit or any other required certificate or approval by misrepresentation.

(7) For the purposes of subsection (6) of this section and WAC 246-272A-0440, a person is defined to include:

(a) Applicant;

(b) Reapplicant;

(c) Permit holder; or

(d) Any individual associated with (a), (b) or (c) of this subsection including, but not limited to:

(i) Board members;

(ii) Officers;

(iii) Managers;

(iv) Partners;

(v) Association members;

(vi) Agents; and

(vii) Third persons acting with the knowledge of such persons.

[Statutory Authority: RCW 43.20.050. 05-15-119, § 246-272A-0430, filed 7/18/05, effective 9/15/05.]

WAC 246-272A-0440 Notice of decision—Adjudicative proceeding. (1) All local boards of health shall:

(a) Maintain an administrative appeals process to consider procedural and technical conflicts arising from the administration of local regulations; and

(b) Establish rules for conducting hearings requested to contest a local health officer's actions.

(2) The department shall provide notice of the department's denial, suspension, modification or revocation of a permit, certification, or approval consistent with RCW 43.70.115, chapter 34.05 RCW, and chapter 246-10 WAC.

(3) A person contesting a departmental decision regarding a permit, certificate, or approval may file a written request for an adjudicative proceeding consistent with chapter 246-10 WAC.

(4) Department actions are governed under the Administrative Procedure Act chapter 34.05 RCW, RCW 43.70.115, this chapter, and chapter 246-10 WAC.

[Statutory Authority: RCW 43.20.050. 05-15-119, § 246-272A-0440, filed 7/18/05, effective 9/15/05.]

WAC 246-272A-0450 Severability. If any provision of this chapter or its application to any person or circumstances is held invalid, the remainder of this chapter, or the application of the provision to other persons or circumstances shall not be affected.

[Statutory Authority: RCW 43.20.050. 05-15-119, § 246-272A-0450, filed 7/18/05, effective 9/15/05.]

WAC 246-272A-990 Fees. (1) Fees for proprietary product registration are as follows:

Category	Base Fee	Hourly Fee
Product registration - treatment or distribution - initial application	$400.00	$100.00 per hour if the application requires more than four hours of review time
Transition from list of approved products and systems (both treatment and distribution products)	$200.00	$100.00 per hour if the application requires more than two hours of review time
Annual registration renewal	$100.00	

(2) The base fee is required at the time of application. Any hourly fees for additional review time must be paid in full before the product will be registered.

[Statutory Authority: RCW 43.70.110 and 43.70.250. 06-20-078, § 246-272A-990, filed 10/2/06, effective 1/1/07. Statutory Authority: RCW 43.20.050. 05-15-119, § 246-272A-990, filed 7/18/05, effective 9/15/05.]

Chapter 246-272B WAC

LARGE ON-SITE SEWAGE SYSTEM REGULATIONS

WAC

246-272B-00101 Purpose, objectives, and authority.
246-272B-00501 Administration.
246-272B-01001 Definitions.
246-272B-03001 Applicability.
246-272B-07001 Connection to public sewer system.
246-272B-08001 Application and approval process.
246-272B-09501 Location.
246-272B-11001 Soil and site evaluation.
246-272B-11501 Design.
246-272B-12501 Holding tank sewage systems.
246-272B-13501 Installation.
246-272B-15501 Operation and maintenance.
246-272B-16501 Repair of failures.
246-272B-17501 Expansions.
246-272B-18501 Abandonment.
246-272B-19501 Septage management.
246-272B-20501 Developments, subdivisions, and minimum land area requirements.
246-272B-21501 Areas of special concern.
246-272B-24001 State advisory committee.
246-272B-25001 Waiver of state regulations.
246-272B-26001 Enforcement.
246-272B-27001 Notice of decision—Adjudicative proceeding.
246-272B-28001 Severability.
246-272B-990 Fees.

WAC 246-272B-00101 Purpose, objectives, and authority. (1) The purpose of this chapter is to protect the public health by minimizing:

(a) The potential for public exposure to sewage from large on-site sewage systems (LOSS); and

(b) Adverse effects to public health that discharges from large on-site sewage systems may have on ground and surface waters.

(2) This chapter regulates the location, design, installation, operation, maintenance, and monitoring of large on-site sewage systems to:

(a) Achieve long-term sewage treatment and effluent disposal; and

(b) Limit the discharge of contaminants to waters of the state.

(3) This chapter is adopted by the state board of health in accordance with the authority granted in RCW 43.20.050 to establish minimum requirements for the department of health.

[Statutory Authority: RCW 43.20.050. 03-22-098, § 246-272B-00101, filed 11/5/03, effective 12/6/03.]

WAC 246-272B-00501 Administration. The department shall administer this chapter under the authority and requirements of chapter 43.70 RCW. A LOSS contract jurisdiction may administer this chapter under agreement with the department.

[Statutory Authority: RCW 43.20.050. 03-22-098, § 246-272B-00501, filed 11/5/03, effective 12/6/03.]

WAC 246-272B-01001 Definitions. "Additive" means a commercial product added to an on-site sewage system intended to affect performance or aesthetics of an on-site sewage system.

"Alternative system" means an on-site sewage system other than a conventional gravity system or conventional pressure distribution system. Properly operated and maintained alternative systems provide equivalent or enhanced treatment performance as compared to conventional gravity systems.

"Approved" means a written statement of acceptability, in terms of the requirements in this chapter, issued by the department.

"Approved list" means "list of approved systems and products," developed annually and maintained by the department and containing the following:

(a) List of proprietary devices approved by the department;

(b) List of specific systems meeting treatment standard 1 and treatment standard 2;

(c) List of experimental systems approved by the department;

(d) List of septic tanks, pump chambers, and holding tanks approved by the department.

"Areas of special concern" means an area of definite boundaries delineated through public process, where a local health officer, or the department in consultation with the health officer, determines additional requirements for on-site sewage systems may be necessary to reduce potential failures, or minimize negative impact of on-site systems upon public health.

"Cesspool" means a pit receiving untreated sewage and allowing the liquid to seep into the surrounding soil or rock.

"Conforming system" means any large on-site sewage system, except an experimental system, meeting any of the following criteria:

(a) Systems in full compliance with new construction requirements under this chapter; or

(b) Systems approved, installed and operating in accordance with requirements of previous editions of this chapter; or

(c) Systems or repairs permitted through departmental concurrence by the waiver process which assure public health protection by higher treatment performance or other methods.

"Conventional gravity system" means an on-site sewage system consisting of a septic tank and a subsurface soil absorption system with gravity distribution of the effluent.

"Conventional pressure distribution system" means an on-site sewage system consisting of a septic tank and a subsurface soil absorption system with pressure distribution of the effluent. Design, operation and maintenance, and performance monitoring are described by "*Guidelines for Pressure Distribution Systems*" by the Washington state department of health.

"Covenant" means a recorded agreement stating certain activities and/or practices are required or prohibited.

"Cuts and/or banks" means any naturally occurring or artificially formed slope greater than one hundred percent (forty-five degrees) and extending vertically at least five feet from the toe of the slope to the top of the slope as follows:

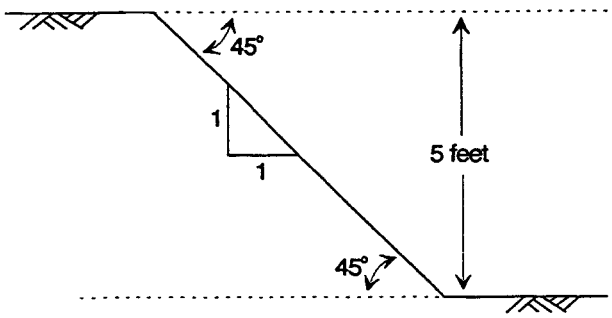

"Designer" means a person who matches site and soil characteristics with appropriate on-site sewage technology.

"Development" means the creation of a residence, structure, facility, mobile home park, subdivision, planned unit development, site, area, or any activity resulting in the production of sewage.

"Department" means the Washington state department of health.

"Disposal component" means a subsurface absorption system (SSAS) or other soil absorption system receiving septic tank or other pretreatment device effluent and transmitting it into original, undisturbed soil.

"Effluent" means liquid discharged from a septic tank or other large on-site sewage system component.

"Engineer" means a person who is licensed and in good standing under chapter 18.43 RCW.

"Expansion" means a change in a residence, facility, site, or use that:

(a) Causes an on-site sewage system to exceed its existing treatment or disposal capability, for example, when a res-

idence is increased from two to three bedrooms or a change in use from an office to a restaurant; or

(b) Reduces the treatment or disposal capability of the existing on-site sewage system or the reserve area, for example, when a building is placed over a reserve area.

"Experimental system" means any alternative system:

(a) Without design guidelines developed by the department; or

(b) A proprietary device or method which has not yet been evaluated and approved by the department.

"Failure" means a condition of a large on-site sewage system that threatens the public health by inadequately treating sewage or by creating a potential for direct or indirect contact between sewage and the public.

Examples of failure include:

(a) Sewage on the surface of the ground;

(b) Sewage backing up into a structure caused by slow soil absorption of septic tank effluent;

(c) Sewage leaking from a septic tank, pump chamber, holding tank, or collection system;

(d) Cesspools or seepage pits where evidence of ground water or surface water quality degradation exists;

(e) Inadequately treated effluent contaminating ground water or surface water; or

(f) Noncompliance with standards stipulated on the permit.

"Ground water" means a subsurface water occupying the zone of saturated soil, permanently, seasonally, or as the result of the tides. Indications of ground water may include:

(a) Water seeping into or standing in an open excavation from the soil surrounding the excavation.

(b) Spots or blotches of different color or shades of color interspersed with a dominant color in soil, commonly referred to as mottling. Mottling is a historic indication for the presence of ground water caused by intermittent periods of saturation and drying, and may be indicative of poor aeration and impeded drainage. Also see "water table."

"Holding tank sewage system" means a large on-site sewage system which incorporates a holding tank, the services of a sewage pumper/hauler, and the off-site treatment and disposal for the sewage generated.

"Industrial wastewater" means the water or liquid-carried waste from an industrial process. These wastes may result from any process or activity of industry, manufacture, trade or business, from the development of any natural resource, or from animal operations such as feedlots, poultry houses, or dairies. The term includes contaminated storm water and leachate from solid waste facilities.

"Installer" means a qualified person approved by a local health officer to install or repair on-site sewage systems or components.

"Large on-site sewage system (LOSS)" means an integrated arrangement of components for a residence, building, industrial establishment or other places not connected to a public sewer system which:

(a) Conveys, stores, treats, and/or provides subsurface soil treatment and disposal on the property where it originates, or on adjacent or nearby property; and

(b) Includes piping, treatment devices, other accessories, and soil underlying the disposal component of the initial and reserve areas; and

(c) Has design flows, at any common point, greater than three thousand five hundred gallons per day.

"LOSS contract jurisdiction" means a local health jurisdiction that by contract with the department has delineated responsibilities and authority for LOSS within their jurisdiction. For these jurisdictions the term "department" shall be applied to them throughout this chapter, except as otherwise noted.

"Local health officer" means the health officer of the city, county, or city-county health department or district within the state of Washington, or a representative authorized by and under the direct supervision of the local health officer, as defined in chapter 70.05 RCW.

"May" means discretionary, permissive, or allowed.

"Ordinary high-water mark" means the mark on lakes, streams, and tidal waters, found by examining the beds and banks and ascertaining where the presence and action of waters are so common and usual, and so long continued in all ordinary years, as to mark upon the soil a character distinct from that of the abutting upland with respect to vegetation, as that condition exists on the effective date of this chapter, or as it may naturally change thereafter. The following definitions apply where the ordinary high-water mark cannot be found:

(a) The ordinary high-water mark adjoining marine water is the elevation at mean higher high tide; and

(b) The ordinary high-water mark adjoining freshwater is the line of mean high water.

"Person" means any individual, corporation, company, association, society, firm, partnership, joint stock company, or any governmental agency, or the authorized agents of any such entities.

"Planned unit development" means a development characterized by a unified site design, clustered residential units and/or commercial units, and areas of common open space.

"Pressure distribution" means a system of small diameter pipes equally distributing effluent throughout a trench or bed, as described in the "*Guidelines for Pressure Distribution Systems*" by the department. Also see "conventional pressure distribution."

"Proprietary device or method" means a device or method classified as an alternative system, or a component thereof, held under a patent, trademark or copyright.

"Public sewer system" means a sewerage system:

(a) Owned or operated by a city, town, municipal corporation, county, or other approved ownership consisting of a collection system and necessary trunks, pumping facilities and a means of final treatment and disposal; and

(b) Approved by or under permit from the department of ecology, the department of health and/or a local health officer.

"Pumper" means a person approved by the local health officer to remove and transport wastewater or septage from large on-site sewage systems.

"Repair" means restoration, by reconstruction or relocation, or replacement of a failed large on-site sewage system.

"Reserve area" means an area of land approved for the installation of a conforming system and dedicated for replacement of the LOSS upon its failure.

"Residential sewage" means sewage having the constituency and strength typical of wastewater from domestic households.

"Restrictive layer" means a stratum impeding the vertical movement of water, air, and growth of plant roots, such as hardpan, claypan, fragipan, caliche, some compacted soils, bedrock and unstructured clay soils.

"Seepage pit" means an excavation more than three feet deep where the sidewall of the excavation is designed to dispose of septic tank effluent. Seepage pits may also be called "dry wells."

"Septage" means the mixture of solid wastes, scum, sludge, and liquids pumped from within septic tanks, pump chambers, holding tanks, and other LOSS components.

"Septic tank" means a watertight pretreatment receptacle receiving the discharge of sewage from a building sewer or sewers, designed and constructed to permit separation of settleable and floating solids from the liquid, detention and anaerobic digestion of the organic matter, prior to discharge of the liquid.

"Sewage" means any urine, feces, and the water carrying human wastes, including kitchen, bath, and laundry wastes from residences, buildings, industrial establishments or other places. For the purposes of these regulations, "sewage" is generally synonymous with domestic wastewater. Also see "residential sewage."

"Shall" means mandatory.

"Soil log" means a detailed description of soil characteristics providing information on the soil's capacity to act as an acceptable treatment and disposal medium for sewage.

"Soil type" means a numerical classification of fine earth particles and coarse fragments as described in WAC 246-272B-11001 (2)(e).

"Subdivision" means a division of land or creation of lots or parcels, described under chapter 58.17 RCW, now or as hereafter amended, including both long and short subdivisions, planned unit developments, and mobile home parks.

"SSAS" or **"subsurface soil absorption system"** means a system of trenches three feet or less in width, or beds between three and ten feet in width, containing distribution pipe within a layer of clean gravel designed and installed in original, undisturbed soil for the purpose of receiving effluent and transmitting it into the soil.

"Surface water" means any body of water, whether fresh or marine, flowing or contained in natural or artificial unlined depressions for significant periods of the year, including natural and artificial lakes, ponds, springs, rivers, streams, swamps, marshes, and tidal waters.

"Treatment standard 1" means a thirty-day average of less than 10 milligrams per liter of biochemical oxygen demand (five-day BOD_5), 10 milligrams per liter of total suspended solids (TSS), and a thirty-day geometric mean of less than 200 fecal coliform per 100 milliliters.

"Treatment standard 2" means a thirty-day average of less than 10 milligrams per liter of biochemical oxygen demand (five-day BOD_5), 10 milligrams per liter of total suspended solids (TSS), and a thirty-day geometric mean of less than 800 fecal coliform per 100 milliliters.

"Unit volume of sewage" means:

(a) A single family residence;

(b) A mobile home site in a mobile home park; or

(c) Four hundred fifty gallons of sewage per day where the proposed development is not single family residences or a mobile home park.

"Vertical separation" means the depth of unsaturated, original, undisturbed soil of soil types 1B-6 between the bottom of a disposal component and the highest seasonal water table, a restrictive layer, or soil type 1A, as illustrated below by the profile drawing of a subsurface soil absorption system:

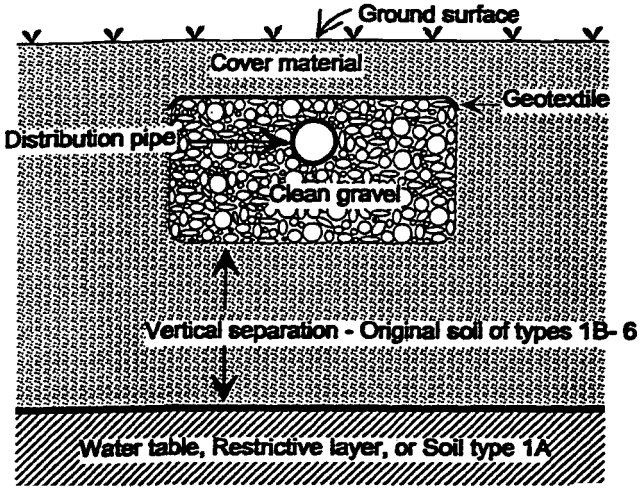

"Water table" means the upper surface of the ground water, whether permanent or seasonal. Also see "ground water."

"Wave barrier" means a bulkhead of adequate height and construction protecting the immediate area of on-site sewage system components from wave action.

[Statutory Authority: RCW 43.20.050. 03-22-098, § 246-272B-01001, filed 11/5/03, effective 12/6/03.]

WAC 246-272B-03001 Applicability. (1) The department:

(a) Shall apply this chapter to LOSS treating wastewater and disposing of effluent from residential sewage sources;

(b) May apply this chapter to LOSS for sources other than residential sewage, excluding industrial wastewater, if pretreatment, siting, design, installation, and operation and maintenance measures provide treatment and effluent disposal equal to that required of residential sewage.

(2) Preliminary plats specifying general methods of sewage treatment, disposal, system designs and locations approved prior to the effective date of these regulations shall be acted upon in accordance with regulations in force at the time of preliminary plat approval for a maximum period of five years from the date of approval or for an additional year beyond the effective date of these regulations, whichever assures the most lenient expiration date.

(3) A valid sewage system design approval, or installation permit issued prior to January 15, 1995:

(a) Shall be acted upon in accordance with regulations in force at the time of issuance;

(b) Shall have a maximum validity period of two years from the date of issuance or remain valid for an additional year beyond January 15, 1995, whichever assures the most lenient expiration date; and

(c) May be modified to include additional requirements if the health officer determines that a serious threat to public health exists.

(4) The Washington state department of ecology has authority and approval over:

(a) Domestic or industrial wastewater under chapter 173-240 WAC; and

(b) Sewage systems using mechanical treatment, or lagoons, with ultimate design flows above three thousand five hundred gallons per day.

(5) The Washington state department of health has authority and approval over:

(a) Systems with design flows through any common point between three thousand five hundred to fourteen thousand five hundred gallons per day; and

(b) Any large on-site sewage system "LOSS" for which jurisdiction has been transferred to the department of health under conditions of memorandum of agreement with the department of ecology.

(6) The local health officer has authority and approval over:

(a) Systems with design flows through any common point up to three thousand five hundred gallons per day;

(b) Any large on-site sewage system "LOSS" for which jurisdiction has been transferred to a local health jurisdiction from the department by contract.

(7) Where this chapter conflicts with chapter 90.48 RCW, Water pollution control, the requirements under those statutes apply.

[Statutory Authority: RCW 43.20.050. 03-22-098, § 246-272B-03001, filed 11/5/03, effective 12/6/03.]

WAC 246-272B-07001 Connection to public sewer system. (1) When adequate public sewer services are available within two hundred feet of the residence or facility, the local health officer upon the failure of an existing large on-site sewage system may:

(a) Require hook-up to a public sewer system; or

(b) Permit the repair or replacement of the LOSS only if a conforming system can be designed and installed.

(2) Except as noted in subsection (1) of this section, the owner of a failure shall abandon the LOSS under WAC 246-272B-18501 and connect the residence or other facility to a public sewer system when:

(a) The distance between the residence or other facility and an adequate public sewer is two hundred feet or less as measured along the usual or most feasible route of access; and

(b) The sewer utility allows the sewer connection.

(3) Local boards of health may require a new development to connect to a public sewer system to protect public health.

[Statutory Authority: RCW 43.20.050. 03-22-098, § 246-272B-07001, filed 11/5/03, effective 12/6/03.]

WAC 246-272B-08001 Application and approval process. (1) Persons proposing a new LOSS for which the department has jurisdiction by WAC or memorandum of agreement with the department of ecology shall meet the requirements specified in "*Design Standards for Large On-site Sewage Systems*," 1993, Washington state department of health (available upon written request to the department).

(2) Persons shall submit the documents and fees specified under (a) through (f) of this subsection and obtain approval from the department before installing a LOSS to serve any facility:

(a) A preliminary report, stamped and signed by an engineer, including:

(i) A discussion of the proposed project, including the schedule of construction;

(ii) A discussion of compliance with other state and local zoning, platting, health, and building regulations as they relate to sewage treatment and disposal;

(iii) An analysis of the site's capacity to treat and dispose of the proposed quantity and quality of sewage;

(iv) An analysis of the factors identified in WAC 246-272B-20501 (2)(d)(ii)(A); and

(v) A soil and site evaluation as specified in WAC 246-272B-11001 signed by the evaluator;

(vi) A management plan describing the:

(A) Management entity consisting of one of the following:

(I) For residential subdivisions where the lots are individually owned, a public entity serves as the primary management entity, or as the third party trust for a private management entity; or

(II) For other uses, including single ownership, a public entity or a private entity via an appropriate contract or agreement provides management;

(B) Duties of the management entity, including specific tasks and frequency of operation and maintenance;

(C) Controls to ensure the continuity and permanency of proper operation and maintenance;

(D) Methods and frequency of monitoring, recordkeeping, and reporting to the department;

(E) Rights and responsibilities of management; and

(F) Rights and responsibilities of persons purchasing connections to the LOSS.

(b) Complete plans and specifications of the LOSS:

(i) Showing a conventional pressure distribution system with three feet of vertical separation;

(ii) Meeting all other design criteria within "*Design Standards for Large On-site Sewage Systems*," 1993, Washington state department of health (available upon written request to the department); and

(iii) Stamped and signed by an engineer;

(c) A schedule of inspections to confirm the installation conforms to the plans and specifications;

(d) A draft operation and maintenance manual, describing the LOSS and outlining routine maintenance procedures for proper operation of the system;

(e) Required fees; and

(f) Other information as required by the department.

(3) Persons desiring to repair, modify or expand a facility served, or to be served by a LOSS shall submit all documents and fees specified under subsection (2)(a) through (f) of this section, unless the department waives submission of some elements as unnecessary, and obtain approval from the department.

(4) The department:

(a) Shall not change the terms of a project's construction approval during a two-year validity period. However, additional terms to protect public health may be included before granting one-year approval permit extensions;

(b) Shall not permit an experimental LOSS;

(c) Shall only permit installation of alternative systems for which there are alternative system guidelines;

(d) Shall conduct a presite inspection; and

(e) May allow the applicant to renew approval under the initial terms for successive one-year periods if:

(i) The LOSS is incomplete two years after the department's approval;

(ii) The applicant requests renewal in writing; and

(iii) The applicant submits required fees.

(5) A qualified installer shall install the LOSS.

(6) The applicant or applicant's agent:

(a) Shall comply with all conditions set forth in the department's construction approval;

(b) May request extensions to the construction approval permit; and

(c) Shall comply with any additional conditions upon construction approval extensions set forth by the department, and pay required fees for renewing the approval.

(7) Before a new LOSS is used:

(a) An engineer shall stamp, sign, and submit a LOSS construction report to the department within sixty days following the completion of construction of the LOSS including:

(i) A completed form stating the LOSS was constructed in accordance with the department's approved plans and specifications; and

(ii) An "as built" or "record" drawing;

(b) The department shall conduct a final inspection; and

(c) The owner shall:

(i) Submit an operation and maintenance manual developed by an engineer for the installed LOSS to the department for review and approval; and

(ii) Obtain a LOSS operating permit from the department by:

(A) Completing and submitting forms to the department; and

(B) Paying required fees.

(8) The owner of a LOSS that has been approved by the department or local health officer or constructed after July 1, 1984, shall:

(a) Obtain a LOSS operating permit from the department; and

(b) Annually renew it.

(9) The owner shall annually renew the LOSS operating permit by:

(a) Continued retention of an approved management entity to operate and maintain the LOSS;

(b) Submitting a report to the department demonstrating the LOSS is operated, maintained, and monitored in accordance with this chapter and the approved operation and maintenance manual; and

(c) Submitting required fees.

(10) The department:

(a) Shall issue a LOSS operating permit to owners of LOSS meeting the requirements of subsections (1) through (7) of this section;

(b) Shall annually renew the LOSS operating permit when the owner has complied with the requirements under subsection (9) of this section;

(c) May revoke the LOSS operating permit when the:

(i) Approved management entity ceases to operate and maintain the LOSS;

(ii) Owner does not meet other conditions of the LOSS operating permit; or

(iii) LOSS fails;

(d) Shall monitor the performance of LOSS; and

(e) Shall apply the requirements under WAC 246-272B-16501 to failing LOSS.

(11) A local health officer and the department may enter into a contract under which:

(a) The local health officer will assume the department's responsibilities in subsections (2), (4), (6), (7)(a), (b) and (c)(i) of this section to regulate LOSS; and

(b) The local health officer may charge fees to a LOSS applicant or owner for services provided if the authorization for such fees is set forth in local regulations adopted under this chapter.

[Statutory Authority: RCW 43.20.050. 03-22-098, § 246-272B-08001, filed 11/5/03, effective 12/6/03.]

WAC 246-272B-09501 Location. (1) Persons shall design and install LOSS to meet the minimum horizontal separations shown in Table I, Minimum Horizontal Separations:

Table I
Minimum Horizontal Separations

Items Requiring Setback	From edge of disposal component and reserve area	From septic tank, holding tank, containment vessel, pump chamber, and distribution box	From building sewer, collection, and nonperforated distribution line[1]
Nonpublic well or suction line	100 ft.	50 ft.	50 ft.
Public drinking water well	100 ft.	100 ft.	100 ft.
Public drinking water spring[3]	200 ft.	200 ft.	100 ft.
Spring or surface water used as drinking water source[2, 3]	100 ft.	50 ft.	50 ft.
Pressurized water supply line[4]	10 ft.	10 ft.	10 ft.
Properly decommissioned well[5]	10 ft.	N/A	N/A
Surface water[3]:			
Marine water	100 ft.	50 ft.	10 ft.
Freshwater	100 ft.	50 ft.	10 ft.
Building foundation	10 ft.[6]	5 ft.[6]	2 ft.
Property or easement line[6]	5 ft.	5 ft.	N/A
Interceptor/curtain drains/drainage ditches:			
Downgradient[7]	30 ft.	5 ft.	N/A
Upgradient[7]	10 ft.	N/A	N/A
Downgradient cuts or banks with at least 5 ft. of original, undisturbed soil above a restrictive layer due to a structural or textural change	25 ft.	N/A	N/A
Downgradient cuts or banks with less than 5 ft. of original, undisturbed soil above a restrictive layer due to a structural or textural change	50 ft.	N/A	N/A

1 "Building sewer" as defined by the most current edition of the Uniform Plumbing Code. "Nonperforated distribution" includes pressure sewer transport lines.

2 If surface water is used as a public drinking water supply, the designer shall locate the LOSS outside of the required sanitary control area.

3 Measured from the ordinary high-water mark.

4 The local health officer may approve a sewer transport line within ten feet of a water supply line if the sewer line is constructed in accordance with section 2.4 of the department of ecology's "*Criteria For Sewage Works Design*," revised October 1985, or equivalent.

5 Before any component can be placed within 100 feet of a well, the designer shall submit a "decommissioned water well report" provided by a licensed well driller, which verifies that appropriate decommissioning procedures noted in chapter 173-160 WAC were followed. Once the well is properly decommissioned, it no longer provides a potential conduit to ground water, but septic tanks, pump chambers, containment vessels or distribution boxes should not be placed directly over the site.

6 The local health officer may allow a reduced horizontal separation to not less than two feet where the property line, easement line, or building foundation is upgradient.

7 The item is downgradient when liquid will flow toward it upon encountering a water table or a restrictive layer. The item is upgradient when liquid will flow away from it upon encountering a water table or restrictive layer.

(2) Where any condition indicates a greater potential for contamination or pollution, the department may increase the minimum horizontal separations. Examples of such conditions include excessively permeable soils, unconfined aquifers, shallow or saturated soils, dug wells, and improperly abandoned wells.

(3) Persons shall design and/or install disposal components only where:

(a) The slope is less than forty-five percent (twenty-four degrees);

(b) The area is not subject to:

(i) Encroachment by buildings or construction such as placement of swimming pools, power poles and underground utilities;

(ii) Cover by impervious material;

(iii) Vehicular traffic; or

(iv) Other activities adversely affecting the soil or the performance of the LOSS;

(c) Sufficient reserve area for replacement exists to treat and dispose one hundred percent of the design flow;

(d) The land is stable; and

(e) Surface drainage is directed away from the site.

[Statutory Authority: RCW 43.20.050. 03-22-098, § 246-272B-09501, filed 11/5/03, effective 12/6/03.]

WAC 246-272B-11001 Soil and site evaluation. (1) The department shall permit only engineers, qualified designers and soil scientists to perform soil and site evaluations.

(2) The person evaluating the soil and site shall:

(a) Record:

(i) A sufficient number of soil logs to evaluate conditions within:

(A) The initial disposal component; and

(B) The reserve area.

(ii) The ground water conditions, the date of the observation, and the probable maximum height;

(iii) The topography of the site;

(iv) The drainage characteristics of the site;

(v) The existence of structurally deficient soils subject to major wind or water erosion events such as slide zones and dunes;

(vi) The existence of designated flood plains; and

(vii) The location of existing encumbrances affecting system placement, such as:

(A) Wells and suction lines;

(B) Water sources and supply lines;

(C) Surface water;

(D) Abandoned wells;

(E) Outcrops of bedrock and restrictive layers;

(F) Buildings;

(G) Property lines and lines of easement;

(H) Interceptors such as footing drains, curtain drains and drainage ditches;

(I) Cuts, banks, and fills;

(J) Driveways and parking areas;

(K) Existing OSS; and

(L) Underground utilities.

(b) Use the soil and site evaluation procedures and terminology in accordance with chapter 3 and Appendix A of the "*Design Manual: On-site Wastewater Treatment and Disposal Systems*," United States Environmental Protection Agency, EPA-625/1-80-012, October, 1980, except where modified by, or in conflict with, this chapter (available upon written request to the department);

(c) Use the soil names and particle size limits of the United States Department of Agriculture Soil Conservation Service classification system;

(d) Determine texture, structure, compaction and other soil characteristics that affect the treatment and water movement potential of the soil by using normal field and/or laboratory procedures such as particle size analysis; and

(e) Classify the soil as in Table II, Soil Textural Classification:

Table II
Soil Textural Classification

Soil Type	Soil Textural Classifications
1A	Very gravelly[1] coarse sands or coarser. All extremely gravelly[2] soils.
1B	Very gravelly medium sand, very gravelly fine sand. Very gravelly very fine sand, very gravelly loamy sands.
2A	Coarse sands (also includes ASTM C-33 sand).
2B	Medium sands.
3	Fine sands, loamy coarse sands, loamy medium sands.
4	Very fine sands, loamy fine sands, loamy very fine sands, sandy loams, loams.
5	Silt loams, that are porous and have well-developed structure.
6	Other silt loams, sandy clay loams, clay loams. Silty clay loams.
Unsuitable for treatment or disposal	Sandy clay, clay, silty clay, and strongly cemented or firm soils.

[1] Very gravelly = >35% and <60% gravel and coarse fragments, by volume.

[2] Extremely gravelly = >60% gravel and coarse fragments, by volume.

(3) The owner of the property or his agent shall:

(a) Prepare the soil log excavation to:

(i) Allow examination of the soil profile in its original position by:

(A) Excavating pits of sufficient dimensions to enable observation of soil characteristics by visual and tactile means to a depth three feet deeper than the anticipated bottom of the disposal component; or

(B) Stopping at a shallower depth if a water table or restrictive layer is encountered; and

(ii) Allow determination of the soil's texture, structure, color, bulk density or compaction, water absorption capabilities or permeability, and elevation of the highest seasonal water table; and

(b) Assume responsibility for constructing and maintaining the soil log excavation in a manner to reduce potential for physical injury by:

(i) Placing excavated soil no closer than two feet of the excavation;

(ii) Providing a ladder, earth ramp or steps for safe egress to a depth of four feet, then scoop out a portion from the floor to gain the additional two-foot depth necessary to observe the six feet of soil face; however, the scooped portion is not to be entered;

(iii) Provide a physical warning barrier around the excavation's perimeter; and

(iv) Fill the excavation upon completion of the soil log.

(4) The department:

(a) Shall render a decision on the height of the water table within twelve months of receiving the application under precipitation conditions typical for the region;

(b) May require water table measurements to be recorded during months of probable high-water table conditions, if insufficient information is available to determine the highest seasonal water table;

(c) May require any other soil and site information affecting location, design, or installation; and

(d) May reduce the required number of soil logs for LOSS if adequate soils information has previously been developed.

[Statutory Authority: RCW 43.20.050. 03-22-098, § 246-272B-11001, filed 11/5/03, effective 12/6/03.]

WAC 246-272B-11501 Design. (1) The department shall require that large on-site sewage systems be designed only by engineers.

(2) The department shall require the following design criteria:

(a) All the sewage from the building served is directed to the LOSS;

(b) Drainage from the surface, footing drains, roof drains, and other nonsewage drains is prevented from entering the LOSS and the area where the LOSS is located;

(c) The LOSS is designed to treat and dispose of the following flows:

(i) For single family residences, one hundred twenty gallons per bedroom per day, with a minimum of two hundred

forty gallons per day, unless technical justification is provided to support calculations using a lower design flow;

(A) For other facilities, the design flows noted in "*Design Manual: On-site Wastewater Treatment and Disposal Systems*," United States Environmental Protection Agency, EPA-625/1-80-012, October, 1980 (available upon written request to the department). If the type of facility is not listed in the EPA design manual, design flows from one of the following documents are used: "*Design Standards for Large On-site Sewage Systems*," 1993, Washington state department of health (available upon request to the department); or

(B) "*Criteria for Sewage Works Design*," revised October 1985, Washington state department of ecology (available upon written request to the department of ecology).

(d) Septic tanks:

(i) Have the following minimum liquid capacities:

(A) For a single family residence use Table III, Required Minimum Liquid Volumes of Septic Tanks:

Table III
Required Minimum Liquid Volumes of Septic Tanks

Number of Bedrooms	Required minimum liquid tank volume in gallons
≤3	900
4	1000
Each additional bedroom	250

(B) For facilities handling residential sewage, other than one single family residence, 1.5 times the daily design flow with a minimum of 1000 gallons;

(ii) Have clean-out and inspection accesses within twelve inches of finished grade; and

(iii) Are designed with protection against floatation and ground water intrusion in high ground water areas;

(e) Pump chambers:

(i) Have clean-out and inspection accesses at or above finished grade; and

(ii) Are designed with protection against floatation, ground water intrusion, and surface water inflow in high ground water areas;

(f) SSAS beds are only designed in soil types 2A, 2B, with a width not exceeding ten feet;

(g) Conventional pressure distribution systems have:

(i) The calculation of absorption area based upon the design flows in subsection (2)(c) of this section and loading rates equal to or less than those in Table V, Maximum Hydraulic Loading Rate for Residential Sewage, and applied only to the bottom of the trench of the excavation.

Table V
Maximum Hydraulic Loading Rate For Residential Sewage[1]

Soil Type	Soil Textural Classification Description	Loading Rate gal./sq. ft./day
1A	Very gravelly[2] coarse sands or coarser, extremely gravelly[3] soils.	Varies according to system selected to meet treatment standard 2[4].
1B	Very gravelly medium sands, very gravelly fine sands, very gravelly very fine sands, very gravelly loamy sands.	Varies according to soil type of the nongravel portion[5].
2A	Coarse sands (includes the ASTM C-33 sand).	1.2
2B	Medium sands.	1.0
3	Fine sands, loamy coarse sands, loamy medium sands.	0.8
4	Very fine sands, loamy fine sands, loamy very fine sands, sandy loams, loams.	0.6
5	Silt loams that are porous and have well-developed structure.	0.45

1 Compacted soils, cemented soils, and/or poor soil structure may require a reduction of the loading rate or make the soil unsuitable for conventional OSS systems.

2 Very gravelly = >35% and <60% gravel and coarse fragments, by volume.

3 Extremely gravelly = >60% gravel and coarse fragments, by volume.

4 Due to the highly permeable nature of type 1A soil, only alternative systems which meet or exceed treatment standard 2 can be installed. However, a conventional gravity system may be used if it meets all criteria listed under (h) of this subsection (WAC 246-272-11501 (2)(h)). The loading rate for these systems is provided in the appropriate guideline.

5 The maximum loading rate listed for the soil described as the nongravel portion is to be used for calculating the absorption surface area required. The value is to be determined from this table.

(ii) The bottom of a SSAS shall not be deeper than three feet below the finished grade, except under special conditions approved by the local health officer. The depth of such system shall not exceed ten feet from the finished grade;

(iii) The sidewall below the invert of the distribution pipe is located in original, undisturbed soil;

(iv) Clean gravel, covered with a geotextile; and

(v) A cover of between six and twenty-four inches of mineral soil containing no greater than ten percent organic content over the gravel to preclude accumulation of water over the drainfield.

(3) The department:

(a) Shall approve only LOSS designs meeting the requirements of this chapter;

(b) Shall not approve designs for:

(i) Cesspools;

(ii) Seepage pits, except as allowed for repairs under WAC 246-272B-16501;

(c) May approve a design for the reserve area different than the design approved for the initial LOSS, if both designs meet the requirements of this chapter for new construction; and

(d) May allow the hydraulic loading rate calculated for the infiltration surface area in a disposal component to include six inches of the SSAS sidewall height for determin-

ing design flow where total recharge by annual precipitation and irrigation is less than twelve inches per year.

(4) The department shall:

(a) Develop and maintain design and construction standards for septic tanks, pump chambers, and holding tanks;

(b) Review septic tanks, pump chambers, and holding tanks approving those satisfying the design and construction standards developed by the department.

[Statutory Authority: RCW 43.20.050. 03-22-098, § 246-272B-11501, filed 11/5/03, effective 12/6/03.]

WAC 246-272B-12501 Holding tank sewage systems. (1) Persons shall not install or use holding tank sewage systems for residential development or expansion of residences, whether seasonal or year-round, except:

(a) For permanent uses limited to controlled, part-time, commercial usage situations, such as, recreational vehicle parks and trailer dump stations.

(b) For interim uses limited to handling of emergency situations.

(c) For repairs as permitted under WAC 246-272B-16501 (1)(c)(i).

(2) A person proposing to use a holding tank sewage system shall:

(a) Follow established design criteria established by the department;

(b) Submit a management program to the department assuring ongoing operation and maintenance before the department grants project approval; and

(c) Use a holding tank on the current approved list.

[Statutory Authority: RCW 43.20.050. 03-22-098, § 246-272B-12501, filed 11/5/03, effective 12/6/03.]

WAC 246-272B-13501 Installation. (1) The department shall require approved installers to construct LOSS.

(2) The installer shall:

(a) Follow the approved design;

(b) Have the approved design in possession during installation;

(c) Only install septic tanks, pump chambers, and holding tanks approved by the department;

(d) Be on the site at all times during the excavation and construction of the LOSS;

(e) Install the LOSS to be watertight, except for the disposal component;

(f) Cover the installation only after the department has given approval to cover; and

(g) Back fill and grade the site to prevent surface water from accumulating over any component of the LOSS.

[Statutory Authority: RCW 43.20.050. 03-22-098, § 246-272B-13501, filed 11/5/03, effective 12/6/03.]

WAC 246-272B-15501 Operation and maintenance. (1) The LOSS owner is responsible for properly operating and maintaining the LOSS, and shall:

(a) Determine the level of solids and scum in the septic tank once every three years;

(b) Employ an approved pumper to remove the septage from the tank when the level of solids and scum indicates that removal is necessary;

(c) Protect the LOSS area and the reserve area from:

(i) Cover by structures or impervious material;

(ii) Surface drainage;

(iii) Soil compaction, for example by vehicular traffic or livestock; and

(iv) Damage by soil removal and grade alteration;

(d) Keep the flow of sewage to the LOSS at or below the approved design both in quantity and waste strength;

(e) Operate and maintain the LOSS as directed by the department; and

(f) Direct drains, such as footing or roof drains, away from the area where the LOSS is located.

(2) Persons shall not:

(a) Use or introduce strong bases, acids or chlorinated organic solvents into a LOSS for the purpose of system cleaning;

(b) Use a sewage system additive unless it is specifically approved by the department; or

(c) Use a LOSS to dispose of waste components atypical of residential wastewater.

[Statutory Authority: RCW 43.20.050. 03-22-098, § 246-272B-15501, filed 11/5/03, effective 12/6/03.]

WAC 246-272B-16501 Repair of failures. (1) When a LOSS failure occurs, the LOSS owner shall:

(a) Repair or replace the LOSS with a conforming system on the:

(i) Property served; or

(ii) Nearby or adjacent property if easements are obtained; or

(b) Connect the residence or facility to a:

(i) Publicly owned LOSS; or

(ii) Privately owned LOSS where it is deemed economically feasible; or

(iii) Public sewer; or

(c) Perform one of the following when requirements in (a) or (b) of this subsection are not feasible:

(i) Use a holding tank; or

(ii) Obtain a National Pollution Discharge Elimination System or state discharge permit from the Washington state department of ecology issued to a public entity or jointly to a public entity and the system owner only when the local health officer determines:

(A) A LOSS is not feasible; and

(B) The only realistic method of final disposal of treated effluent is discharge to the surface of the land or into surface water; or

(iii) Abandon the property.

(2) Prior to replacing or repairing the effluent disposal component, the LOSS owner shall develop and submit information required under WAC 246-272B-08001.

(3) The person responsible for the design shall locate and design repairs to:

(a) Protect drinking water sources;

(b) Prevent the direct discharge of sewage to ground water, surface water, or upon the surface of the ground;

(c) Meet the horizontal separations under WAC 246-272B-09501(1) to public drinking water sources;

(d) Meet other requirements of this chapter to the maximum extent permitted by the site; and

(e) Maximize the:

(i) Vertical separation;

(ii) Distance from a well, spring, or suction line; and

(iii) Distance to surface water.

[Statutory Authority: RCW 43.20.050. 03-22-098, § 246-272B-16501, filed 11/5/03, effective 12/6/03.]

WAC 246-272B-17501 Expansions. The department shall require an on-site sewage system and a reserve area in full compliance with the new system construction standards specified in this chapter for an expansion of a residence or other facility.

[Statutory Authority: RCW 43.20.050. 03-22-098, § 246-272B-17501, filed 11/5/03, effective 12/6/03.]

WAC 246-272B-18501 Abandonment. Persons permanently removing a septic tank, seepage pit, cesspool, or other sewage container from service shall:

(1) Have the septage removed by an approved pumper;

(2) Remove or destroy the lid; and

(3) Fill the void with soil.

[Statutory Authority: RCW 43.20.050. 03-22-098, § 246-272B-18501, filed 11/5/03, effective 12/6/03.]

WAC 246-272B-19501 Septage management. (1) An individual shall be approved by the local health officer as a qualified pumper before removing septage from a LOSS.

(2) Persons removing septage from a LOSS shall:

(a) Transport septage or sewage only in vehicles clearly identified with the name of the business and approved by the local health officer;

(b) Record and report septage removal to the local health officer;

(c) Dispose of septage, or apply septage biosolids to land only in a manner consistent with applicable laws.

[Statutory Authority: RCW 43.20.050. 03-22-098, § 246-272B-19501, filed 11/5/03, effective 12/6/03.]

WAC 246-272B-20501 Developments, subdivisions, and minimum land area requirements. (1) A person proposing the development shall obtain approval from the local health officer prior to any development where the use of LOSS is proposed.

(2) The local health officer shall require the following prior to approving any development:

(a) Site evaluations as required under WAC 246-272B-11001, excluding subsections (3)(a)(i) and (4)(d);

(b) Where a subdivision with individual wells is proposed:

(i) Configuration of each lot to allow a one hundred-foot radius water supply protection zone to fit within the lot lines; or

(ii) Establishment of a one hundred-foot protection zone around each existing and proposed well site;

(c) Where preliminary approval of a subdivision is requested, provision of at least one soil log per proposed lot, unless the local health officer determines existing soils information allows fewer soil logs;

(d) Determination of the minimum lot size or minimum land area required for the development using method I and/or method II:

(i) **METHOD I.** Table VII, Single Family Residence Minimum Lot Size or Minimum Land Area Required Per Unit Volume of Sewage, shows the minimum lot size required per single family residence. For developments other than single family residences, the minimum land areas shown are required for each unit volume of sewage.

Table VII
Minimum Land Area Requirement
Single Family Residence or Unit Volume of Sewage

Type of water supply	Soil Type (defined by section 11001 of this chapter)					
	1A, 1B	2A, 2B	3	4	5	6
Public	0.5 acre[1]					
	2.5 acre[2]	12,500 sq. ft.	15,000 sq. ft.	18,000 sq. ft.	20,000 sq. ft.	22,000 sq. ft.
Individual on each lot	1.0 acre[1]					
	2.5 acres[2]	1 acre	1 acre	1 acre	2 acres	2 acres

[1] Due to the highly permeable nature of soil type 1A, only alternative systems which meet or exceed treatment standard 2 can be installed.

[2] A conventional gravity system in type 1 soil is only allowed if it is in compliance with all conditions listed under WAC 246-272-11501 (2)(h). One of these limiting conditions is a 2.5 acre minimum lot size.

(ii) **METHOD II.** A minimum land area proposal using method II is acceptable only when the applicant:

(A) Justifies the proposal through a written analysis of the:

(I) Soil type and depth;

(II) Area drainage, and/or lot drainage;

(III) Public health impact on ground and surface water quality;

(IV) Setbacks from property lines, water supplies, etc.;

(V) Source of domestic water;

(VI) Topography, geology, and ground cover;

(VII) Climatic conditions;

(VIII) Availability of public sewers;

(IX) Activity or land use, present, and anticipated;

(X) Growth patterns;

(XI) Reserve areas for additional subsurface treatment and disposal;

(XII) Anticipated sewage volume;

(XIII) Compliance with current planning and zoning requirements;

(XIV) Possible use of alternative systems or designs;

(XV) Existing encumbrances, such as listed in WAC 246-272B-11001 (2)(a)(vii) and legal access documents if any component of the LOSS is not on the lot where the sewage is generated; and

(XVI) Any other information required by the local health officer.

(B) Shows development with public water supplies having:

(I) At least twelve thousand five hundred square feet lot sizes per single family residence;

(II) No more than 3.5 unit volumes of sewage per day per acre for developments other than single family residences; and

(C) Shows development with individual water supplies having at least one acre per unit volume of sewage; and

(D) Shows land area under surface water is not included in the minimum land area calculation; and

(e) Regardless of which method is used for determining required minimum lot sizes or minimum land area, submittal to the health officer of information consisting of field data, plans, and reports supporting a conclusion the land area provided is sufficient to:

(i) Install conforming LOSS;

(ii) Assure preservation of reserve areas for proposed and existing LOSS;

(iii) Properly treat and dispose of the sewage; and

(iv) Minimize public health effects from the accumulation of contaminants in surface and ground water.

(3) The local health officer or department shall require lot areas of twelve thousand five hundred square feet or larger except when a person proposes:

(a) LOSS within the boundaries of a recognized sewer utility having a finalized assessment roll; or

(b) A planned unit development with:

(i) A signed, notarized, and recorded deed covenant restricting any development of lots or parcels above the approved density with the density meeting the minimum land area requirements of subsection (2)(d) of this section;

(ii) A public entity responsible for operation and maintenance of the LOSS, or a single individual owning the LOSS;

(iii) Management requirements under WAC 246-272B-08001 when installing a LOSS; and

(iv) Extinguishment of the deed covenant and higher density development allowed only when the development connects to public sewers.

(4) The local health officer or department may:

(a) Allow inclusion of the area to the centerline of a road or street right of way in a method II determination under subsection WAC 246-272B-20501 (2)(d)(ii) to be included in the minimum land area calculation if:

(i) The dedicated road or street right of ways are along the perimeter of the development;

(ii) The road or street right of ways are dedicated as part of the proposed development; and

(iii) Lots are at least twelve thousand five hundred square feet in size.

(b) Require detailed plot plans and LOSS designs prior to final approval of subdivision proposals;

(c) Require larger land areas or lot sizes to achieve public health protection; or

(d) Prohibit development on individual lots within the boundaries of an approved subdivision if the proposed LOSS design does not protect public health by meeting requirements of these regulations.

[Statutory Authority: RCW 43.20.050. 03-22-098, § 246-272B-20501, filed 11/5/03, effective 12/6/03.]

WAC 246-272B-21501 Areas of special concern. (1) The local health officer may investigate and take appropriate action to minimize public health risk in formally designated areas such as:

(a) Shellfish protection districts or shellfish growing areas;

(b) Sole source aquifers designated by the U.S. Environmental Protection Agency;

(c) Areas with a critical recharging effect on aquifers used for potable water as designated under Washington Growth Management Act, RCW 36.70A.170;

(d) Designated public water supply wellhead protection areas;

(e) Upgradient areas directly influencing water recreation facilities designated for swimming in natural waters with artificial boundaries within the waters as described by the Water Recreation Facilities Act, chapter 70.90 RCW;

(f) Areas designated by the department of ecology as special protection areas under WAC 173-200-090, Water quality standards for ground waters of the state of Washington;

(g) Wetland areas under production of crops for human consumption;

(h) Frequently flooded areas delineated by the Federal Emergency Management Agency; and

(i) Areas identified and delineated by the local board of health in consultation with the department to address public health threat from on-site systems.

(2) The permit issuing authority may impose more stringent requirements on new development and corrective measures to protect public health upon existing developments in areas of special concern, including:

(a) Additional location, design, and/or performance standards for OSS;

(b) Larger land areas for new development;

(c) Prohibition of development;

(d) Additional operation, maintenance, and monitoring of OSS performance;

(e) Requirements to upgrade existing OSS;

(f) Requirements to abandon existing OSS; and

(g) Monitoring of ground water or surface water quality.

(3) Within areas of special concern, to reduce risk of system failures, a person approved or designated by the local health officer shall:

(a) Inspect every OSS at least once every three years;

(b) Submit the following written information to both the local health officer and the property owner within thirty days following the inspection:

(i) Location of the tank;

(ii) Structural condition of the tank, including baffles;

(iii) Depth of solids in tank;

(iv) Problems detected with any part of the system;

(v) Maintenance needed;

(vi) Maintenance provided at time of inspection; and

(vii) Other information as required by the local health officer.

(c) Immediately report failures to the local health officer.

[Statutory Authority: RCW 43.20.050. 03-22-098, § 246-272B-21501, filed 11/5/03, effective 12/6/03.]

WAC 246-272B-24001 State advisory committee. The department shall:

(1) Maintain an on-site sewage advisory committee to:

(a) Make recommendations concerning departmental policy and regulations;

(b) Review program services; and

(c) Provide input to the department regarding the on-site sewage program;

(2) Select members from agencies, professions, organizations having knowledge and interest in OSS, and groups which are affected by the regulations; and

(3) Convene meetings as needed.

[Statutory Authority: RCW 43.20.050. 03-22-098, § 246-272B-24001, filed 11/5/03, effective 12/6/03.]

WAC 246-272B-25001 Waiver of state regulations. (1) The department may grant a waiver from specific requirements in this chapter if a person submits a completed departmental waiver application and required fee to the department, including justification showing the requested waiver is consistent with the LOSS standards in this chapter, and is consistent with the purpose and objectives of this chapter to assure public health protection.

(2) If an applicant desires to modify and resubmit a previously denied waiver request, the process described above in subsection (1) of this section shall be followed again.

[Statutory Authority: RCW 43.20.050. 03-22-098, § 246-272B-25001, filed 11/5/03, effective 12/6/03.]

WAC 246-272B-26001 Enforcement. (1) The department:

(a) Shall enforce the rules of chapter 246-272B WAC; or

(b) May refer cases within their jurisdiction to the local prosecutor's office or office of the attorney general, as appropriate.

(2) When a person violates the provisions under this chapter, the department, local health officer, local prosecutor's office, or office of the attorney general may initiate enforcement or disciplinary actions, or any other legal proceeding authorized by law, including, but not limited to, any one or a combination of the following:

(a) Informal administrative conferences, convened at the request of the department or owner, to explore facts and resolve problems;

(b) Orders directed to the owner and/or operator of the LOSS and/or person causing or responsible for the violation of the rules of chapter 246-272B WAC;

(c) Denial, suspension, modification, or revocation of permits, approvals, or certification; and

(d) Civil or criminal action.

(3) Orders authorized under this section include the following:

(a) Orders requiring corrective measures necessary to effect compliance with chapter 246-272B WAC which may include a compliance schedule; and

(b) Orders to stop work and/or refrain from using any LOSS or portion of the LOSS or improvements to the LOSS until all permits, certifications, and approvals required by rule or statute are obtained.

(4) Enforcement orders issued under this section shall:

(a) Be in writing;

(b) Name the person or persons to whom the order is directed;

(c) Briefly describe each action or inaction constituting a violation of the rules of chapter 246-272B WAC, or applicable local code;

(d) Specify any required corrective action, if applicable;

(e) Specify the effective date of the order, with time or times of compliance;

(f) Provide notice of the consequences of failure to comply or repeated violation, as appropriate. Such notices may include a statement that continued or repeated violation may subject the violator to:

(i) Denial, suspension, or revocation of a permit approval, or certification; and/or

(ii) Referral to the office of the county prosecutor or attorney general;

(iii) Other appropriate remedies;

(g) Provide the name, business address, and phone number of an appropriate staff person who may be contacted regarding an order;

(h) Comply with chapters 43.70 and 34.05 RCW if issued by the department.

(5) Enforcement orders shall be personally served in the manner of service of a summons in a civil action or in a manner showing proof of receipt.

(6) The department shall have cause to deny the application or reapplication for an operational permit or to revoke, suspend, or modify a required operational permit of any person who has:

(a) Failed or refused to comply with the provisions of chapter 246-272B WAC, or any other statutory provision or rule regulating the operation of a LOSS; or

(b) Obtained or attempted to obtain a permit or any other required certificate or approval by misrepresentation.

(7) For the purposes of subsection (6) of this section and WAC 246-272B-27001, a person is defined to include:

(a) Applicant;

(b) Reapplicant;

(c) Permit holder; or

(d) Any individual associated with (a), (b) or (c) of this subsection including, but not limited to:

(i) Board members;

(ii) Officers;

(iii) Managers;

(iv) Partners;

(v) Association members;

(vi) Agents; and in addition

(vii) Third persons acting with the knowledge of such persons.

[Statutory Authority: RCW 43.20.050. 03-22-098, § 246-272B-26001, filed 11/5/03, effective 12/6/03.]

WAC 246-272B-27001 Notice of decision—Adjudicative proceeding. (1) The department shall provide notice of a denial, suspension, modification or revocation of a permit, certification, or approval consistent with RCW 43.70.-115, chapter 34.05 RCW, and chapter 246-10 WAC.

(2) A person contesting a departmental decision regarding a permit, certificate, approval, or fine may file a written request for an adjudicative proceeding consistent with chapter 246-10 WAC.

(3) Department actions are governed under the Administrative Procedure Act, chapter 34.05 RCW, RCW 43.70.115, this chapter, and chapter 246-10 WAC.

(4) All LOSS contract jurisdictions shall establish rules for conducting hearings requested to contest a local health officer's actions.

[Statutory Authority: RCW 43.20.050. 03-22-098, § 246-272B-27001, filed 11/5/03, effective 12/6/03.]

WAC 246-272B-28001 Severability. If any provision of this chapter or its application to any person or circumstances is held invalid, the remainder of this chapter, or the application of the provision to other persons or circumstances, shall not be affected.

[Statutory Authority: RCW 43.20.050. 03-22-098, § 246-272B-28001, filed 11/5/03, effective 12/6/03.]

WAC 246-272B-990 Fees. (1) Plan review and inspection. The following fees apply for LOSS application, review and inspection:

Category	Base Fee	Hourly Fee
Project review fee	$800.00	$100.00 per hour if the application requires more than eight hours review time
Inspections (presite and final)	$500.00 per visit	N/A

The base fee is required at the time of application. Any hourly fees for additional review time must be paid in full before final approval is granted.

(2) Operating permits. The following fees apply for annual LOSS operating permits and renewals.

Category	Base Fee	System Volume Fee
Initial operating permit and annual renewal - unconditional systems	$150.00	$.01 for each gallon of daily approved design flow
Annual renewal "noncompliant - conditional systems"	$150.00	$.02 for each gallon of daily approved design flow

[Statutory Authority: RCW 43.70.110 and 43.70.250. 06-20-078, § 246-272B-990, filed 10/2/06, effective 1/1/07. Statutory Authority: RCW 43.20.050. 03-22-098, § 246-272B-990, filed 11/5/03, effective 12/6/03.]

Chapter 246-273 WAC
ON-SITE SEWAGE SYSTEM ADDITIVES

WAC

246-273-001 Purpose and authority.
246-273-010 Definitions.
246-273-020 Applicability.
246-273-030 Additive review and approval application—Process and requirements.
246-273-040 Review criteria and decision-making procedures.
246-273-050 Ingredients—Prohibitions and conditions.
246-273-060 Unfair practices.
246-273-065 Reregistration.
246-273-070 Confidentiality.
246-273-080 Enforcement.
246-273-990 Fees.

WAC 246-273-001 Purpose and authority. (1) This chapter establishes the review, criteria and decision-making procedures for evaluating on-site sewage disposal system additives to determine whether individual additives have an adverse effect on public health or water quality.

(2) The Washington state department of health administers this chapter under the authority and requirements of chapter 70.118 RCW.

[Statutory Authority: Chapter 70.118 RCW and RCW 43.70.040. 95-24-062, § 246-273-001, filed 12/1/95, effective 1/1/96.]

WAC 246-273-010 Definitions. "Additive" means a commercial product intended to affect the performance or aesthetics of an on-site sewage disposal system.

"Additive manufacturer" means any person who manufactures, formulates, blends, packages, or repackages an additive product for sale, use, or distribution within Washington state.

"Approved" means a written statement of acceptability, in terms of the requirements of this chapter, issued by the Washington state department of health.

"Chemical additive" means those additives containing acids, bases, or other chemicals deemed unsafe by the department for use in an on-site sewage disposal system. Chemicals identified as unsafe are specified in WAC 246-273-050.

"Department" means the Washington State Department of Health, P.O. Box 47826, Olympia, Washington 98504-7826.

"Failure" means:

- Effluent has been discharged on the surface of the ground prior to approved treatment; or
- Effluent has percolated to the surface of the ground; or
- Effluent has contaminated or threatens to contaminate a ground water supply.

"On-site sewage disposal system" means any system of piping, treatment devices, or other facilities that convey, store, treat, or dispose of sewage on the property where it originates or on nearby property under the control of the user where the system is not connected to a public sewer system. For purposes of this chapter, an on-site sewage disposal system does not include indoor plumbing and associated fixtures.

"Person" means any individual, corporation, company, association, society, firm, partnership, joint stock company, or any governmental agency, or the authorized agents of any such entities.

"Sewage" means any urine, feces, and the water carrying human wastes, including kitchen, bath, and laundry wastes from residences, buildings, industrial establishments or other places.

[Statutory Authority: Chapter 70.118 RCW and RCW 43.70.040. 95-24-062, § 246-273-010, filed 12/1/95, effective 1/1/96.]

WAC 246-273-020 Applicability. (1) After July 1, 1994, no person shall use, sell, or distribute an on-site sewage disposal system chemical additive in Washington state.

(2) After January 1, 1996, no person shall use, sell or distribute an on-site sewage disposal system additive whose ingredients have not been approved by the department in accordance with requirements of chapter 70.118 RCW and this chapter.

[Statutory Authority: Chapter 70.118 RCW and RCW 43.70.040. 95-24-062, § 246-273-020, filed 12/1/95, effective 1/1/96.]

WAC 246-273-030 Additive review and approval application—Process and requirements. (1) Manufacturers desiring to sell, advertise, or distribute an on-site sewage disposal system additive for use in Washington state must request and obtain departmental review and approval of their product(s) by submitting a complete application, including:

(a) Comprehensive, yet concise, response to the questionnaire (see subsection (3) of this section);

(b) A product sample in the labeled container intended for sale or distribution;

(c) The on-site sewage disposal system additive evaluation fee described in WAC 246-273-990.

(2) All submitted material (written responses and other materials) must be legible, typed or printed. Hand-written responses to the application questions or hand-written notes or other submitted documentation may, at the discretion of the department, result in rejection of the application.

(3) The questionnaire for review and approval of an on-site sewage disposal system additive consists of four parts: Applicant information, product information, product literature, and certification. All applicants must provide complete written responses to the following questions:

Applicant information (AI)

(AI-1) Applicant name, mailing address, street address, city/town, state, zip code, telephone and fax, with area code, time zone. The applicant must be vested with the authority to represent the manufacturer in this capacity.

(AI-2) Contact individual (if different from person in Item 1) name, mailing address, street address, city/town, state, zip code, telephone and fax, with area code, time zone.

(AI-3) Manufacturing facility location/address, mailing address, street address, city/town, state, zip code.

(AI-4) Name of on-site sewage disposal system additive product. (One product per application. If identical formulations of product are marketed under different product names or distributor labels, list them here. If product formulations vary, submit separate applications for each product.)

(AI-5) List of firms, companies, or persons distributing the on-site sewage disposal system additive product in Washington state. Do not list product retailers. Provide the following information for each: Contact person name, mailing address, street address, city/town, state, zip code, telephone and fax, with area code, time zone.

Product information (PI)

(PI-1) List all physical, chemical, biological, or other agents which make up the additive and provide toxicity information for each component (provide material safety data sheet, if possible). Provide trade and scientific name and formula of chemical agents. Specify trade and scientific name(s) of bacteria and enzymes, and characterization (origin, native occurrence, pathogenicity, etc.). Report formulation in "% by weight," including inert and active ingredients, and trace amounts, if any, of prohibited ingredients (WAC 246-273-050).

(PI-2) Describe the anticipated use of the additive in the on-site sewage system. Include in the description where and how the product is to be applied, the frequency of application, who will perform the application, and the amount and/or concentration of the product per application. For additives with chemical constituents, indicate the amount and/or concentration of each chemical constituent applied and resulting from application of the product.

(PI-3) Describe the function of the additive within the on-site sewage disposal system and explain in detail how the additive achieves this function.

(PI-4) List all known reactions and by-products produced by the use of the additive including:

- The product's effect on bacteria normally found in a septic tank or aerobic treatment device and the soil surrounding a subsurface drainfield, and in the treatment media of a sand filter or sand mound system; and
- pH range adjustment in all parts of an on-site sewage disposal system.

(PI-5) Provide any known or projected limitation on the use of the on-site sewage disposal system additive.

(PI-6) Provide reports of any available studies on the use of the on-site sewage disposal system additive to support the responses to questions PI-1 through PI-5 and to demonstrate the product's safety (lack of harm) to the public health, water quality, on-site sewage system components and function. Include monitoring reports and data from actual field or laboratory-based on-site sewage system studies.

(PI-7) Attach any formal approvals or other acceptances from other jurisdictions (private sector, state, or federal) for use of the on-site sewage disposal system additive.

Product literature (PL)

(PL-1) Attach single copies of sewage system additive product marketing, sales, distribution, advertising literature/materials intended for use in Washington state, not otherwise submitted as part of the complete application.

Certification (C)

(C-1) The following statement must be included as part of a complete application:
"I certify that I represent (INSERT MANUFACTURING COMPANY NAME), that I am authorized to prepare, or direct the preparation of, this application, and that the product presented for review and approval contains no prohibited ingredients (WAC 246-273-050). I attest, under penalty of law, that this document and all attachments, to the best of my knowledge and belief, are true, accurate, and complete."

(C-2) Lines or space must be provided for the applicant's signature, printed name of preparer (if different than

the applicant), preparer's signature (if needed) and date.

[Statutory Authority: Chapter 70.118 RCW and RCW 43.70.040. 95-24-062, § 246-273-030, filed 12/1/95, effective 1/1/96.]

WAC 246-273-040 Review criteria and decision-making procedures. The department shall:

(1) Upon receipt of an application for review and approval of an on-site sewage disposal system additive:

(a) Determine if the application is complete. The department may return incomplete applications, suspending further review until a completed application is submitted. Processing time period begins anew with resubmittal.

(b) Notify the applicant, in writing, that the completed application has been received, and inform the applicant of the anticipated time period for review. A decision of either approval or denial shall be made within forty-five calendar days of receiving a complete application.

(2) Upon review of a complete application, grant or deny approval of the on-site sewage disposal system additive for use, sale, or distribution in Washington state, informing the applicant, in writing, of either approval or denial of the application. Notice of denial shall include explanation of the reason(s) for denial.

(3) Evaluate the request for approval of an on-site sewage disposal system additive according to the following criteria:

(a) Does the additive contain any ingredients deemed unsafe by the department? If yes, the application for approval shall be denied.

(b) Does the additive contain acids or bases that raise or lower the pH of the contents of a septic tank, or wastewater in any other portion of an on-site sewage disposal system, outside of a pH range between 6.0 - 8.0? If yes, the application for approval shall be denied.

(c) Would use of the additive (when applied according to the manufacturer's product-use instructions) adversely affect public health or water quality (surface water or ground water) by either the nature of the ingredients or the effect of the additive on the function of the on-site sewage system? If yes, the application for approval shall be denied.

(d) If the review according to the criteria listed above determines that none of these questions are answered "yes," the on-site sewage disposal system additive shall be approved.

[Statutory Authority: Chapter 70.118 RCW and RCW 43.70.040. 95-24-062, § 246-273-040, filed 12/1/95, effective 1/1/96.]

WAC 246-273-050 Ingredients—Prohibitions and conditions. (1) The following substances and compounds shall not be ingredients of approved on-site sewage disposal system additives. Trace amounts of these substances and compounds may exist in approved on-site sewage disposal system additives if deemed safe by the department for use in an on-site sewage disposal system.

(a) Any substance or compound listed as an EPA toxic pollutant in Title 40 Code of Federal Regulations (CFR 40) 1994, Part 122, Tables II, III, and V of Appendix D:

Table II-Organic Toxic Pollutants In Each Of Four Fractions In Analysis By Gas Chromatography/Mass Spectroscopy (GS/MS)

Volatiles

IV	acrolein
2V	acrylonitrile
3V	benzene
5V	bromoform
6V	carbon tetrachloride
7V	chlorobenzene
8V	chlorodibromomethane
9V	chloroethane
10V	2-chloroethylvinyl ether
11V	chloroform
12V	dichlorobromomethane
14V	1.1-dichloroethane
15V	1.2-dichloroethane
16V	1.1-dichloroethylene
17V	1.2-dichloropropane
18V	1.3-dichloropropylene
19V	ethylbenzene
20V	methyl bromide
21V	methyl chloride
22V	methylene chloride
23V	1,1,2,2-tetrachloroethane
24V	tetrachloroethylene
25V	toluene
26V	1,2-trans-dichloroethylene
27V	1,1,1-trichloroethane
28V	1,1,2-trichloroethane
29V	trichloroethylene
31V	vinyl chloride

Acid Compounds

1A	2-chlorophenol
2A	2,4-dichlorophenol
3A	2,4-dimethylphenol
4A	4,6-dinitro-o-cresol
5A	2,4-dinitrophenol
6A	2-nitrophenol
7A	4-nitrophenol
8A	p-chloro-m-cresol
9A	pentachlorophenol
10A	phenol
11A	2,4,6-trichlorophenol

Base/Neutral

1B	acenaphthene
2B	acenaphthylene
3B	anthracene
4B	benzidine
5B	benzo(a)anthracene
6B	benzo(a)pyrene
7B	3,4-benzofluoranthene
8B	benzo(ghi)perylene
9B	benzo(k)fluoranthene
10B	bis(2-chloroethoxy)methane
11B	bis(2-chloroethyl)ether
12B	bis(2-chloroisopropyl)ether
13B	bis(2-ethylhexyl)phthalate
14B	4-bromophenyl phenyl ether

15B butylbenzyl phthalate
16B 2-chloronaphthalene
17B 4-chlorophenyl phenyl ether
18B chrysene
19B dibenzo(a,h)anthracene
20B 1,2-dichlorobenzene
21B 1,3-dichlorobenzene
22B 1,4-dichlorobenzene
23B 3,3'-dichlorobenzidine
24B diethyl phthalate
25B dimethyl phthalate
26B di-n-butyl phthalate
27B 2,4-dinitrotoluene
28B 2,6-dinitrotoluene
29B di-n-octyl phthalate
30B 1,2-diphenylhydrazine (as azobenzene)
31B fluoranthene
32B fluorene
33B hexachlorobenzene
34B hexachlorobutadiene
35B hexachlorocyclopentadiene
36B hexachloroethane
37B indeno(1,2,3-cd)pyrene
38B isophorone
39B napthalene
40B nitrobenzene
41B N-nitrosodimethylamine
42B N-nitrosodi-n-propylamine
43B N-nitrosodiphenylamine
44B phenanthrene
45B pyrene
46B 1,2,4-trichlorobenzene

Pesticides

1P aldrin
2P alpha-BHC
3P beta-BHC
4P gamma-BHC
5P delta-BHC
6P chlordane
7P 4,4'-DDT
8P 4,4'-DDE
9P 4,4'-DDD
10P dieldrin
11P alpha-endosulfan
12P beta-endosulfan
13P endosulfan sulfate
14P endrin
15P endrin aldehyde
16P heptachlor
17P heptachlor epoxide
18P PCB-1242
19P PCB-1254
20P PCB-1221
21P PCB-1232
22P PCB-1248
23P PCB-1260
24P PCB-1016
25P toxaphene

Table III-Other Toxic Pollutants (Metals and Cyanide) and Total Phenols

Antimony, Total
Arsenic, Total
Beryllium, Total
Cadmium, Total
Chromium, Total
Copper, Total
Lead, Total
Mercury, Total
Nickel, Total
Selenium, Total
Silver, Total
Thallium, Total
Zinc, Total
Cyanide, Total
Phenols, Total

Table IV-Toxic Pollutants and Hazardous Substances Required To Be Identified By Existing Dischargers If Expected To Be Present

Toxic Pollutants

Asbestos

Hazardous Substances

Acetaldehyde
Allyl alcohol
Allyl chloride
Amyl acetate
Aniline
Benzonitrile
Benzyl chloride
Butyl acetate
Butylamine
Captan
Carbaryl
Carbofuran
Carbon disulfide
Chlorpyrifos
Coumaphos
Cresol
Crotonaldehyde
Cyclohexane
2,4-D(2,4-Dichlorophenoxy acetic acid)
Diazinon
Dicamba
Dichlobenil
Dichlone
2,2-Dichloropropionic acid
Dichlorvos
Diethyl amine
Dimethyl amine
Dinitrobenzene
Diquat
Disulfoton
Diuron
Epichlorohydrin
Ethion
Ethylene diamine
Ethylene dibromide
Formaldehyde

Furfural
Guthion
Isoprene
Isopropanolamine
Dodecylbenzenesulfonate
Kelthane
Kepone
Malathion
Mercaptodimethur
Methoxychlor
Methyl mercaptan
Methyl methacrylate
Methyl parathion
Mevinphos
Mexacarbate
Monoethyl amine
Monomethyl amine
Naled
Napthenic acid
Nitrotoluene
Parathion
Phenolsulfanate
Phosgene
Propargite
Propylene oxide
Pyrethrins
Quinoline
Resorcinol
Strontium
Strychnine
Styrene
2,4,5-T (2,4,5-Trichlorophenoxy acetic acid)
TDE (Tetrachlorodiphenylethane)
2,4,5-TP (2-(2,4,5-Trichlorophenoxy propanoic acid)
Trichlorofan
Triethanolamine
Dodecylbenzenesulfonate
Triethylamine
Trimethylamine
Uranium
Vanadium
Vinyl acetate
Xylene
Xylenol
Zirconium

(b) Other chemicals deemed by the department to be detrimental to on-site sewage disposal system function, public health, or water quality.

(2) The department may prohibit (not approve on-site sewage system additives containing) acids and bases depending upon the effect on public health or ground water of their concentration when applied according to the manufacturer's product-use instructions.

[Statutory Authority: Chapter 70.118 RCW and RCW 43.70.040. 95-24-062, § 246-273-050, filed 12/1/95, effective 1/1/96.]

WAC 246-273-060 Unfair practices. Manufacturers of approved additives advertised, sold, or distributed in Washington state shall:

(1) Make no claims relating to the elimination of the need for septic tank pumping or proper septic tank maintenance;

(2) List the components of additive products on the product label, along with information regarding instructions for use and precautions;

(3) Make no false statements, design, or graphic representation relative to an additive product that is inconsistent with RCW 70.118.060, 70.118.070, or 70.118.080; and

(4) Make no claims, either direct or implied, about the performance of the product based on state approval of its ingredients.

[Statutory Authority: Chapter 70.118 RCW and RCW 43.70.040. 95-24-062, § 246-273-060, filed 12/1/95, effective 1/1/96.]

WAC 246-273-065 Reregistration. Reregister, by written correspondence to the department, their on-site sewage disposal system additive product(s) each time the product formulation changes. The department may require a new review and approval for reregistration of products that undergo formulation changes.

[Statutory Authority: Chapter 70.118 RCW and RCW 43.70.040. 95-24-062, § 246-273-065, filed 12/1/95, effective 1/1/96.]

WAC 246-273-070 Confidentiality. (1) Manufacturers shall submit a signed confidentiality statement if any information submitted would, if made public, divulge confidential business information, methods, or processes entitled to protection as trade secrets of the manufacturer, and identify any such information.

(2) The department shall not disclose any information obtained from manufacturers, when stated by the manufacturer, that the information, if made public, would divulge confidential business information, methods or processes entitled to protection as trade secrets of the manufacturer.

[Statutory Authority: Chapter 70.118 RCW and RCW 43.70.040. 95-24-062, § 246-273-070, filed 12/1/95, effective 1/1/96.]

WAC 246-273-080 Enforcement. (1) The attorney general, or appropriate city or county prosecuting attorney may bring appropriate action to enjoin any violation of the:

(a) Prohibition on the sale or distribution of on-site sewage disposal system additives; or

(b) Conditions of RCW 70.118.080 Additives—Unfair practices, and WAC 246-273-060 (1) through (4).

(2) The department may rescind approval of an on-site sewage disposal system additive in response to:

(a) Demonstrated link to on-site sewage disposal system failure resulting from use (consistent with the manufacturer's product-use instructions) of an approved additive; or

(b) Documentation that ingredients or formulation of an approved on-site sewage system additive differs from the ingredients or formulation information submitted for review, and upon which departmental approval was granted.

[Statutory Authority: Chapter 70.118 RCW and RCW 43.70.040. 95-24-062, § 246-273-080, filed 12/1/95, effective 1/1/96.]

WAC 246-273-990 Fees. (1) The applicant shall pay to the department, with the application, a three hundred fifty dollar fee. This fee includes two hundred dollars for develop-

ing criteria and review procedures, plus one hundred fifty dollars for up to two hours of product-specific review. Additional review time will be billed at seventy-five dollars per hour.

(2) All fees must be paid prior to the departments' approval.

[Statutory Authority: Chapter 70.118 RCW and RCW 43.70.040. 95-24-062, § 246-273-990, filed 12/1/95, effective 1/1/96.]

Chapter 246-280 WAC
RECREATIONAL SHELLFISH BEACHES

WAC

246-280-001	Authority, purpose, and scope.
246-280-010	Definitions.
246-280-015	General administration.
246-280-020	Recreational shellfish beach classification.
246-280-030	Water quality criteria and standards.
246-280-060	Recreational shellfish beach sanitary survey.
246-280-070	PSP monitoring of recreational beaches.

DISPOSITION OF SECTIONS FORMERLY CODIFIED IN THIS CHAPTER

246-280-040	Marine water quality testing. [Statutory Authority: RCW 43.20.050. 91-02-051 (Order 124B), recodified as § 246-280-040, filed 12/27/90, effective 1/31/91. Statutory Authority: Chapter 90.70 RCW. 89-20-020 (Order 335), § 248-52-040, filed 9/27/89, effective 10/28/89.] Repealed by 97-20-100, filed 9/29/97, effective 10/30/97. Statutory Authority: RCW 43.20.050.
246-280-050	Shellfish meat quality standards and testing. [Statutory Authority: RCW 43.20.050. 91-02-051 (Order 124B), recodified as § 246-280-050, filed 12/27/90, effective 1/31/91. Statutory Authority: Chapter 90.70 RCW. 89-20-020 (Order 335), § 248-52-050, filed 9/27/89, effective 10/28/89.] Repealed by 97-20-100, filed 9/29/97, effective 10/30/97. Statutory Authority: RCW 43.20.-050.
246-280-080	Public information and notification. [Statutory Authority: RCW 43.20.050. 91-02-051 (Order 124B), recodified as § 246-280-080, filed 12/27/90, effective 1/31/91. Statutory Authority: Chapter 90.70 RCW. 89-20-020 (Order 335), § 248-52-080, filed 9/27/89, effective 10/28/89.] Repealed by 97-20-100, filed 9/29/97, effective 10/30/97. Statutory Authority: RCW 43.20.050.

WAC 246-280-001 Authority, purpose, and scope. (1) Authority. Under the authority of RCW 43.20.050, powers and duties of state board of health, these regulations are hereby established as minimum requirements for the monitoring and classification of recreational shellfish beaches.

(2) Purpose. It is the purpose of chapter 246-280 WAC to protect public health and establish procedures for evaluating the sanitary quality of recreational shellfish beaches.

(3) Scope.

(a) These regulations shall apply to recreational shellfish beaches under public ownership. Commercial shellfish harvest, even though it may occur on publicly owned beaches, is governed by chapter 246-282 WAC and chapter 69.30 RCW.

(b) These regulations shall apply to recreationally harvested shellfish on privately owned beaches when the general public has unlimited access to beaches for recreational shellfishing. The department may evaluate and monitor these privately owned beaches if the department determines it to be in the public interest.

(4) Other statutes related to this chapter are:

(a) Chapter 69.30 RCW, sanitary control of shellfish; and

(b) Chapter 246-282 WAC, sanitary control of shellfish.

[Statutory Authority: RCW 43.20.050. 92-02-019 (Order 225B), § 246-280-001, filed 12/23/91, effective 1/23/92; 91-02-051 (Order 124B), recodified as § 246-280-001, filed 12/27/90, effective 1/31/91. Statutory Authority: Chapter 90.70 RCW. 89-20-020 (Order 335), § 248-52-001, filed 9/27/89, effective 10/28/89.]

WAC 246-280-010 Definitions. (1) Abbreviations:

(a) "ml" means milliliter; and

(b) "PSP" means paralytic shellfish poisoning.

(2) "Beach evaluation" means the examination of the sanitary conditions of recreational shellfish beaches through water quality testing, shellfish tissue testing, PSP testing, and sanitary surveys.

(3) "Beach inventory" means the department's list of recreational shellfish beaches governed by chapter 246-280 WAC.

(4) "Closed classification" means a beach exceeds the standards for safe shellfish harvest.

(5) "Conditionally open classification" means a recreational shellfish beach meets the standards for safe shellfish harvest during well-defined time periods, such as dry weather months, and is closed to shellfish harvest when the standards are exceeded.

(6) "Department" means the Washington state department of health (DOH).

(7) "Emergency closure" means temporary closure of a recreational shellfish beach when a contamination event is suspected of impacting an open or conditionally open beach.

(8) "Geometric mean value" means a statistical calculation giving a mean value of data points. Geometric mean value is a term used in state water quality standards. The calculation is:

(a) a X b X c X d = y; and

(b) nth root of y = geometric mean value. N= number of data points which determines the power of the root.

(9) "Health officer" means the health officer or an authorized representative of the city, county, city-county health department or district.

(10) "Local board of health" means the city, town, county, city-county, or district board of health as defined under chapters 70.05, 70.08, and 70.46 RCW.

(11) "Open classification" means a recreational shellfish beach which complies with WAC 246-280-030 standards for safe shellfish harvest without any restrictions due to health hazards.

(12) "Paralytic shellfish poisoning (PSP)" means a human illness caused by eating shellfish that contain high levels of toxin which results from the shellfish consuming large amounts of toxin-producing microscopic marine organism called Gonyaulax catenella.

(13) "Public ownership" means owned by the federal government, state government, a county, a city, or a port district.

(14) "Recreational shellfish beach" means any beach under public ownership available to the public and any privately owned beach where the general public has unlimited access to recreationally harvest shellfish.

(15) "Recreational shellfish harvest" means to harvest shellfish for personal consumption with no intention for sale or barter.

(16) "Sanitary survey" means an evaluation of the sanitary conditions of the shoreline and uplands of a recreational shellfish beach.

(17) "Shellfish" means, for the purposes of chapter 246-280 WAC, all varieties of oysters, clams, mussels, and scallops.

(18) "Unclassified" means a recreational shellfish beach which does not have an initial classification because the department has incomplete sanitary survey data.

(19) "Water quality study" means an evaluation of the sanitary conditions of the marine water of a recreational shellfish beach described under WAC 246-280-030 and 246-280-040.

[Statutory Authority: RCW 43.20.050. 92-02-019 (Order 225B), § 246-280-010, filed 12/23/91, effective 1/23/92; 91-02-051 (Order 124B), recodified as § 246-280-010, filed 12/27/90, effective 1/31/91. Statutory Authority: Chapter 90.70 RCW. 89-20-020 (Order 335), § 248-52-005, filed 9/27/89, effective 10/28/89.]

WAC 246-280-015 General administration. (1) The department and the health officer for each local health jurisdiction shall develop a joint plan of operation designating the roles of each agency for administering chapter 246-280 WAC. This plan shall:

(a) Specifically designate those recreational shellfish beaches included in the joint plan;

(b) Establish whether the department or the health officer shall assume primary responsibility for an identified beach;

(c) Provide for a minimum acceptable frequency of beach evaluation;

(d) Specify who has responsibility for water quality studies, sanitary surveys, PSP monitoring, beach classification, and public notification;

(e) Be signed by the secretary and the chairperson of the local board of health;

(f) Be updated as needed to ensure proper operation of the plan; and

(g) Identify a process for implementing remedial actions to correct pollution sources where deemed appropriate by the department for those beaches classified as closed or conditionally open.

(2) If the local board of health adopts rules governing recreational shellfish harvest within its jurisdiction, the adopted rules shall be consistent with chapter 246-280 WAC.

(3) The department shall develop guidelines on water quality monitoring, PSP monitoring, shoreline survey procedures, public information/notification, and other topics.

(4) Throughout this chapter, the term "health officer" may be substituted for the term "department" if the joint plan of operation delegates authority for action to the health officer.

[Statutory Authority: RCW 43.20.050. 92-02-019 (Order 225B), § 246-280-015, filed 12/23/91, effective 1/23/92; 91-02-051 (Order 124B), recodified as § 246-280-015, filed 12/27/90, effective 1/31/91. Statutory Authority: Chapter 90.70 RCW. 89-20-020 (Order 335), § 248-52-010, filed 9/27/89, effective 10/28/89.]

WAC 246-280-020 Recreational shellfish beach classification. (1) The department or the health officer for each local health jurisdiction as designated in the joint plan of operation, under WAC 246-280-015, shall classify recreational shellfish beaches, based on the risk to public health from consuming shellfish. After completing an initial classification, the department or the health officer for each local health jurisdiction shall make an annual update based on the additional data collected during the year.

(2) The joint plan of operation's criteria used to classify beaches shall include the following:

(a) Water quality data;

(b) A sanitary survey of pollution sources; and

(c) A review of natural and synthetic toxins, including PSP.

(3) The department shall classify recreational shellfish beaches as follows:

(a) Open;

(b) Conditionally open;

(c) Closed;

(d) Emergency closure; and

(e) Unclassified.

[Statutory Authority: RCW 43.20.050. 92-02-019 (Order 225B), § 246-280-020, filed 12/23/91, effective 1/23/92; 91-02-051 (Order 124B), recodified as § 246-280-020, filed 12/27/90, effective 1/31/91. Statutory Authority: Chapter 90.70 RCW. 89-20-020 (Order 335), § 248-52-020, filed 9/27/89, effective 10/28/89.]

WAC 246-280-030 Water quality criteria and standards. (1) The department shall classify the beach as open when the following three conditions are met:

(a) The marine water covering a recreational shellfish beach shall not exceed a geometric mean value of fourteen fecal coliform bacteria/100 ml of water. In addition, not more than ten percent of the individual water samples may exceed forty-three fecal coliform bacteria/100 ml of water. The geometric mean value shall be calculated on no less than fifteen samples for each water quality station;

(b) Upon completion of a sanitary survey, there are no major sources of pollution of public health significance identified as affecting the beach; and

(c) Natural and synthetic toxin levels shall not exceed established standards.

(2) The department shall classify the beach as conditionally open when standards for open criteria are met during a well-defined and predictable time period, such as dry weather months. Use of the conditionally open classification shall be limited to beaches where sufficient data are available to establish the beach meets the open criteria for well-defined time periods.

(3) The department shall classify a beach as closed for failing to meet the open or conditionally open standards and the beach shall not be used for recreational shellfish harvest.

(4) The department shall list a recreational shellfish beach as unclassified until complete sanitary data are available. The department shall list initially the beach as unclassified on the beach inventory.

(5) In the event an open or conditionally open beach is suspected of being impacted by a source of pollution or other threat to public health, the department shall implement an emergency closure immediately. The closure shall remain in effect until the department's investigation verifies the beach is safe for recreational shellfish harvesting.

[Statutory Authority: RCW 43.20.050. 91-02-051 (Order 124B), recodified as § 246-280-030, filed 12/27/90, effective 1/31/91. Statutory Authority: Chapter 90.70 RCW. 89-20-020 (Order 335), § 248-52-030, filed 9/27/89, effective 10/28/89.]

WAC 246-280-060 Recreational shellfish beach sanitary survey. In addition to the evaluation of the shellfish growing waters, and before establishing a classification for the beach, the department shall conduct a sanitary survey of the shoreline and upland areas located adjacent to recreational shellfish beaches. The sanitary survey shall be updated as necessary to reflect changes in shoreline and upland sanitary conditions. A sanitary survey shall consist of:

(1) Identifying and evaluating point source discharges in the vicinity of the beach;

(2) Evaluating all on-site sewage disposal systems in the survey area; and

(3) Evaluating impacts from other nonpoint sources in the area, such as animal waste and storm water.

[Statutory Authority: RCW 43.20.050. 91-02-051 (Order 124B), recodified as § 246-280-060, filed 12/27/90, effective 1/31/91. Statutory Authority: Chapter 90.70 RCW. 89-20-020 (Order 335), § 248-52-060, filed 9/27/89, effective 10/28/89.]

WAC 246-280-070 PSP monitoring of recreational beaches. (1) The department shall conduct a paralytic shellfish poisoning (PSP) monitoring program for recreational shellfish beaches.

(2) The department shall coordinate the monitoring program with the health officer. The joint plan of operation developed between the department and the health officer shall include the following elements:

(a) A sampling schedule which includes the beaches sampled and the frequency of the sampling;

(b) Designation of responsibility for a sample collection; and

(c) A system of establishing beach closures due to PSP which includes:

(i) Closing the beach when the level of toxin exceeds 80 micrograms of toxin per 100 grams of shellfish meat;

(ii) Maintaining the beach closure until two consecutive samples of the same species test below the standard of 80 micrograms of toxin per 100 grams of shellfish meat; and

(iii) Closing beaches suspected of posing a PSP threat to public health when they are located in a PSP-impacted area that cannot be sampled on a frequent basis. The beaches shall remain closed until samples verify the area is safe to reopen.

[Statutory Authority: RCW 43.20.050. 91-02-051 (Order 124B), recodified as § 246-280-070, filed 12/27/90, effective 1/31/91. Statutory Authority: Chapter 90.70 RCW. 89-20-020 (Order 335), § 248-52-070, filed 9/27/89, effective 10/28/89.]

Chapter 246-282 WAC
SANITARY CONTROL OF SHELLFISH

WAC

246-282-001 Scope and purpose.
246-282-005 Minimum performance standards.
246-282-006 Washington state Vibrio parahaemolyticus control plan.
246-282-010 Definitions.
246-282-012 Certificates of approval—Operation licenses, harvest site certificates.
246-282-014 Operating provisions.
246-282-016 Aquaculture.
246-282-020 Growing areas.
246-282-032 Relay permit.
246-282-034 Wild seed permit.
246-282-036 Bait permit.
246-282-042 Wet storage permit.
246-282-050 Packing, handling, and storing of shucked shellfish.
246-282-060 Personal health and cleanliness.
246-282-070 Construction and maintenance.
246-282-080 Identification and records.
246-282-082 Export certificate.
246-282-092 Inspection by department.
246-282-100 Notice of decision—Adjudicative proceeding.
246-282-102 Denial, revocation, suspension of license, certificate, or permit—Civil penalties.
246-282-104 Penalty assignment—Calculation of penalty and proportionate adjustment—Aggravating and mitigating factors.
246-282-110 Administrative provisions.
246-282-120 Penalty clause.
246-282-130 Separability clause.
246-282-990 Fees.

DISPOSITION OF SECTIONS FORMERLY CODIFIED IN THIS CHAPTER

246-282-030 Storage, cleansing and washing and shipping of shellstock. [Statutory Authority: RCW 69.30.030. 92-02-019 (Order 225B), § 246-282-030, filed 12/23/91, effective 1/23/92. Statutory Authority: RCW 43.20.050. 91-02-051 (Order 124B), recodified as § 246-282-030, filed 12/27/90, effective 1/31/91. Statutory Authority: RCW 69.30.030. 78-08-059 (Order 163), § 248-58-020, filed 7/24/78; Regulation 58.020, effective 3/11/60.] Repealed by 01-04-054, filed 2/5/01, effective 3/8/01. Statutory Authority: RCW 69.30.030 and 43.20.030.

246-282-040 Shucking of shellfish. [Statutory Authority: RCW 43.20.050. 91-02-051 (Order 124B), recodified as § 246-282-040, filed 12/27/90, effective 1/31/91. Statutory Authority: RCW 69.30.030. 78-08-059 (Order 163), § 248-58-030, filed 7/24/78; Regulation 58.030, effective 3/11/60.] Repealed by 01-04-054, filed 2/5/01, effective 3/8/01. Statutory Authority: RCW 69.30.030 and 43.20.030.

246-282-090 Certificate of compliance—Certificate of approval—Suspension for revocation of certificate of approval—Licensure—Revocation of license. [Statutory Authority: RCW 69.30.030. 92-02-019 (Order 225B), § 246-282-090, filed 12/23/91, effective 1/23/92. Statutory Authority: RCW 43.20.050. 91-02-051 (Order 124B), recodified as § 246-282-090, filed 12/27/90, effective 1/31/91. Statutory Authority: RCW 69.30.030 and 43.20.050. 85-21-048 (Order 296), § 248-58-080, filed 10/14/85. Statutory Authority: RCW 69.30.030. 78-08-059 (Order 163), § 248-58-080, filed 7/24/78; Regulation 58.080, effective 3/11/60.] Repealed by 01-04-054, filed 2/5/01, effective 3/8/01. Statutory Authority: RCW 69.30.030 and 43.20.030.

WAC 246-282-001 Scope and purpose. These requirements, as authorized under chapter 69.30 RCW, establish minimum performance standards for the growing, harvesting, processing, packing, storage, transporting, and selling of shellfish for human consumption. These requirements do not apply to persons who conduct activities limited to:

(1) Retail food service, in compliance with the requirements of chapter 246-215 WAC, Food service;

(2) Personal use, in compliance with requirements of chapters 77.32 RCW, Licenses, and 77.15 RCW, Fish and wildlife enforcement code; and

(3) Transporting as a common carrier of freight.

[Statutory Authority: RCW 69.30.030 and 43.20.030. 01-04-054, § 246-282-001, filed 2/5/01, effective 3/8/01. Statutory Authority: RCW 43.20.-050. 91-02-051 (Order 124B), recodified as § 246-282-001, filed 12/27/90, effective 1/31/91. Statutory Authority: RCW 69.30.030. 78-08-059 (Order 163), § 248-58-001, filed 7/24/78; Regulation 58.001, effective 3/11/60.]

WAC 246-282-005 Minimum performance standards. (1) Any person engaged in a shellfish operation or possessing a commercial quantity of shellfish or any quantity of shellfish for sale for human consumption must comply with and is subject to:

(a) The requirements of the 2005 National Shellfish Sanitation Program (NSSP) Guide for the Control of Molluscan Shellfish, published by the United States Department of Health and Human Services, Public Health Service, Food and Drug Administration (copies available through the U.S. Food and Drug Administration, Shellfish Sanitation Branch, and the Washington state department of health, office of food safety and shellfish programs);

(b) The provisions of 21 Code of Federal Regulations (CFR), Part 123 - Fish and Fishery Products, adopted December 18, 1995, by the United States Food and Drug Administration, regarding Hazard Analysis Critical Control Point (HACCP) plans (copies available through the U.S. Food and Drug Administration, Office of Seafood, and the Washington state department of health, office of food safety and shellfish programs); and

(c) All other provisions of this chapter.

(2) If a requirement of the NSSP Guide for the Control of Molluscan Shellfish or a provision of 21 CFR, Part 123, is inconsistent with a provision otherwise established under this chapter or other state law or rule, then the more stringent provision, as determined by the department, will apply.

[Statutory Authority: RCW 69.30.030. 07-20-014, § 246-282-005, filed 9/20/07, effective 10/21/07; 06-01-055, § 246-282-005, filed 12/16/05, effective 1/16/06. Statutory Authority: RCW 69.30.030 and 43.20.030. 01-04-054, § 246-282-005, filed 2/5/01, effective 3/8/01. Statutory Authority: RCW 69.30.030. 98-18-066, § 246-282-005, filed 8/31/98, effective 10/1/98; 98-03-096, § 246-282-005, filed 1/21/98, effective 2/21/98; 96-18-096, § 246-282-005, filed 9/4/96, effective 10/5/96; 94-23-026, § 246-282-005, filed 11/8/94, effective 12/9/94.]

WAC 246-282-006 Washington state *Vibrio parahaemolyticus* control plan. (1) The Washington state *Vibrio parahaemolyticus* control plan, also known as the control plan, establishes harvest and transport requirements for oysters intended for raw consumption during the months of May through September. This section does not apply to shucked oyster meats labeled "for cooking only." The requirements of this section are in addition to Chapter VIII of the 2005 National Shellfish Sanitation Program Model Ordinance (NSSP), Requirements for Harvesters, .03 Shellfish Temperature, Control Option 2; and consists of:

(a) Time-to-temperature controls based on the growing area and month of the year;

(b) Harvest record requirements;

(c) Vibrio illness response requirements;

(d) Training requirements; and

(e) Hazard Analysis Critical Control Point (HACCP) plan and harvest checklist requirements.

(2) All Puget Sound growing areas, including the Strait of Juan de Fuca, are subject to the requirements of this section. Growing areas in Grays Harbor and Willapa Bay where oysters have been epidemiologically associated (linked) as the source of any *Vibrio parahaemolyticus*-associated illness are also subject to the requirements of this section.

(3) The department may grant an exemption to the control plan for Puget Sound growing areas, including the Strait of Juan de Fuca, where there has been no epidemiologically associated (linked) *Vibrio parahaemolyticus*-associated illness if the licensed harvester or dealer can demonstrate safe and effective harvest and transportation methods, as developed in a written agreement.

(4) Time-to-temperature controls are:

Table 1
Puget Sound Growing Areas
(including the Strait of Juan de Fuca):

Months of Control	Time-to-Temperature Control
May	Twelve hours
June and September	Five hours
July and August	Four hours

Table 2
Coastal Growing Areas:

Months of Control	Time-to-Temperature Control
July and August	Ten hours

(5) Licensed dealers and harvesters shall maintain harvest records showing the time of harvest to assure compliance with the control plan. The harvest times begin as follows:

(a) Intertidal (exposed) harvest - Time must begin after the first oysters to be harvested are exposed to the air by the receding tide.

(b) Submerged harvest - Time must begin after the first oysters harvested are exposed to the air and have been placed onto a conveyance, such as a barge or boat. Submerged harvest includes dredge harvesting or retrieval of harvest tubs, bags, baskets, or other containers of oysters previously filled which have been under water for a minimum of one hour for coastal areas and four hours for Puget Sound growing areas.

(6) In the event of two sporadic *Vibrio parahaemolyticus*-associated illnesses within thirty days where oysters from a single growing area are epidemiologically associated (linked) as the source, all licensed harvesters and dealers in the implicated growing area shall reduce the time-to-temperature control by one hour. The implicated growing area shall remain under the reduced time-to-temperature control throughout the control months for that area as defined in Table 1 or 2 of subsection (4) of this section.

(7) In the event of two additional sporadic *Vibrio parahaemolyticus*-associated illnesses within thirty days under the one hour reduced time-to-temperature control where oysters from a single growing area are epidemiologically associated (linked) as the source, the growing area shall be closed to harvest and shipment of oysters intended for raw consumption throughout the control months as defined in Table 1 or 2 of subsection (4) of this section. If the two additional *Vibrio parahaemolyticus*-associated illnesses are attributed to the same licensed harvester or dealer as the first two illnesses, the department shall conduct an investigation in accordance with the requirements as stated in the 2005 NSSP, Chapter II, Risk Assessment and Risk Management, to determine if the illnesses resulted from dealer practices or the growing area.

(8) An exemption to closure identified in subsection (7) of this section may be granted if the licensed harvester or dealer can demonstrate to the department, as developed in a written agreement, that an additional one hour reduction in time-to-temperature controls can be successfully implemented. If approved, the licensed harvester or dealer shall remain under the reduced time-to-temperature control

throughout the control months for that area as defined in Table 1 or 2 of subsection (4) of this section.

(9) If the required time-to-temperature control period is not met, the licensed harvester or dealer shall either:

(a) Destroy the oysters; or

(b) Remove all oysters from containers, disperse them within the original growing area, and allow a minimum of twenty-four hours for purging before reharvesting.

(10) In the event of a *Vibrio parahaemolyticus*-associated illness outbreak where oysters from a particular growing area are epidemiologically associated (linked) as the source, the requirements as stated in the 2005 NSSP, Chapter II, Risk Assessment and Risk Management, shall apply.

(11) All licensed harvesters and dealers shall complete department-approved training specific to the control plan prior to harvesting or shipping oysters intended for raw consumption during the months of May through September. Licensed harvesters and dealers who complete the training shall provide the training to those responsible for the on-site management of harvest activities for their operation.

(12) Following completion of the training required in subsection (11) of this section, all licensed harvesters intending to harvest oysters intended for raw consumption from May through September shall develop a harvest plan and checklist that defines the harvest protocols that will be employed to assure oysters are placed under temperature control as defined in Table 1 or 2 of subsection (4) of this section, and subsection (6) of this section. Licensed dealers (other than harvesters) shall amend their Hazard Analysis Critical Control Point (HACCP) plans to define what harvest protocols will be employed to assure oysters are placed under temperature control as defined in Table 1 or 2 of subsection (4) of this section, and subsection (6) of this section.

[Statutory Authority: Chapter 69.30 RCW. 08-11-051, § 246-282-006, filed 5/15/08, effective 5/19/08.]

WAC 246-282-010 Definitions. The following definitions, as well as those in the NSSP Model Ordinance, apply in the interpretation and the implementation of these rules and regulations.

(1) "Abatement" means an action or series of actions to eliminate a public health hazard or reduce it to a level acceptable to the secretary.

(2) "Approved" means acceptable to the secretary based on the department's determination as to conformance with appropriate standards and good public health practice.

(3) "Approved laboratory" means a laboratory that is in conformance with requirements of the NSSP Model Ordinance.

(4) "Certificate of approval" means a license issued by the department.

(5) "Civil penalty" means a monetary penalty administratively issued by the secretary. It does not include any criminal penalty; damage assessment; wages, premiums, or taxes owed; or interest or late fees on any existing obligation.

(6) "Commercial quantity" means any quantity exceeding:

(a) Forty pounds of mussels;

(b) One hundred oysters;

(c) Fourteen horse clams;

(d) Six geoducks; or

(e) Fifty pounds of other hard or soft shell clams; or

(f) Fifty pounds of scallops.

(7) "Cultch" means any material, other than live shellfish, used for the attachment of seed shellfish.

(8) "Department" means the state department of health.

(9) "Export certificate" means a certificate issued by the department to a licensed shucker-packer or shellstock shipper for use in the foreign export of a lot or shipment of shellfish.

(10) "Harvest" means the act of removing shellstock from a harvest site and its placement on or in a container for transport.

(11) "Harvester" means a shellfish operation with activities limited to growing shellstock, placing shellstock in a container, harvesting shellstock, transporting shellstock within Washington state, and delivering shellstock to a shellfish dealer licensed by the department within four hours of landing it. A harvester does not process shellfish, ship shellfish outside of Washington state, sell shellfish outside of Washington state, sell shellfish to retail outlets, shuck shellfish, repack shellfish, or store shellfish in any location outside of the approved growing area from where the shellfish is harvested.

(12) "Harvest site" means an area of intertidal or subtidal property within a commercial shellfish growing area, that is described by a unique county parcel number, department of fish and wildlife tract number, department of fish and wildlife catch area number, tribal identification number, or other government identification.

(13) "Harvest site certificate" means a type of certificate of approval that designates one or more harvest sites approved for the harvesting of shellfish.

(14) "Hatchery" means an operation where shellfish larvae are produced and grown to the first sessile stage of life.

(15) "Notice of correction" means a document issued by the department that describes a condition or conduct that is not in compliance with chapter 69.30 RCW, this chapter, or the NSSP Model Ordinance and is not subject to civil penalties as provided for in RCW 43.05.110. It is not a formal enforcement action and is not subject to appeal. It is a public record.

(16) "Nursery" means an operation where shellfish are grown from an early sessile stage of life up to a maximum size meeting the definition of shellfish seed.

(17) "Number of previous violations" means the number of prior violations of the same or a similar nature for which the department has taken a license action or assessed a civil penalty.

(18) "Person" means any individual, firm, corporation, partnership, company, association, or joint stock association, and the legal successor thereof.

(19) "Person in charge" means an individual responsible for the supervision of employees and the management of any shellfish operation.

(20) "Public health threat" is either:

(a) "Low," which means a violation that poses a minor possibility of direct or indirect hazard to public health;

(b) "Intermediate," which means a violation that poses a moderate possibility of direct or indirect hazard to public health; or

(c) "High," which means a violation that poses a known significant hazard or possibility of significant direct or indirect hazard to public health.

(21) "Sale" means to sell; offer for sale; barter; trade; deliver; consign; hold for sale, consignment, barter, trade, or delivery; and/or possess with intent to sell or dispose of in a commercial manner.

(22) "Secretary" means the secretary of the department of health or the secretary's authorized representative.

(23) "Seed" means shellfish that are less than market size for human consumption and have a maximum shell length of:

(a) Thirteen millimeters (1/2 inch) for mussels;

(b) Twenty-five millimeters (1 inch) for scallops;

(c) Nineteen millimeters (3/4 inch) for Olympia oysters;

(d) Nineteen millimeters (3/4 inch) for Kumomoto oysters;

(e) Fifty-one millimeters (2 inches) for other oyster species;

(f) Thirty-eight millimeters (1 and 1/2 inch) for geoducks; and

(g) Thirteen millimeters (1/2 inch) for other clam species.

(24) "Shellfish" means all varieties of fresh or fresh-frozen oysters, clams, scallops or mussels, either shucked or in the shell, and all fresh or fresh-frozen edible products thereof.

(25) "Shellfish dealer" means a person with a shellstock shipper or shucker-packer license.

(26) "Shellfish growing area" means the lands and waters in and upon which shellfish are grown for harvesting in commercial quantities or for sale for human consumption.

(27) "Shellfish operation" means growing, placing in a container, harvesting, transporting, processing, culling, shucking, packing, and repacking, storing, shipping, or reshipping of shellfish in commercial quantities or for sale for human consumption.

(28) "Shellfish operation license" means a type of certificate of approval applying to the overall activities of a shellfish operation.

(29) "Shellstock shipper" means a shellfish operation that does not shuck shellfish or repack shucked shellfish.

(30) "Shucker-packer" means a shellfish operation that may shuck and pack shellfish.

(31) "Technical assistance" means information provided by the department to a person regarding chapter 69.30 RCW; this chapter; technologies or other methods to achieve compliance with these rules; assistance in applying for a departmental license or permit required by these rules; or the goals and objectives of these rules. This is not intended to modify the definition of "technical assistance" as provided in RCW 43.05.010(3).

(32) "Violation" means the commission of an act or acts prohibited by the provisions of chapter 69.30 RCW, these rules, or the NSSP Model Ordinance.

(33) "Wet storage" means the temporary storage of shellstock in containers or floats in natural bodies of water or in tanks containing natural or synthetic seawater.

(34) "Wild seed" means naturally set seed shellfish.

[Statutory Authority: RCW 69.30.030 and 43.20.030. 01-04-054, § 246-282-010, filed 2/5/01, effective 3/8/01. Statutory Authority: RCW 69.30.-030. 92-02-019 (Order 225B), § 246-282-010, filed 12/23/91, effective 1/23/92. Statutory Authority: RCW 43.20.050. 91-02-051 (Order 124B), recodified as § 246-282-010, filed 12/27/90, effective 1/31/91. Statutory Authority: RCW 69.30.030 and 43.20.050. 85-21-048 (Order 296), § 248-58-005, filed 10/14/85. Statutory Authority: RCW 69.30.030. 78-08-059 (Order 163), § 248-58-005, filed 7/24/78.]

WAC 246-282-012 Certificates of approval—Operation licenses, harvest site certificates. (1) The department issues two types of certificates of approval to persons who conduct shellfish operations. They are shellfish operation licenses and harvest site certificates.

(2) Any person who possesses a commercial quantity of shellfish or any quantity of shellfish for sale for human consumption must possess, or act on behalf of a person who possesses, a valid shellfish operation license. To obtain a shellfish operation license, a person must:

(a) Submit to the department a completed application on a form developed by the department;

(b) Submit to the department an acceptable written plan of operations that completely describes the shellfish operation;

(c) Pass a preoperational inspection demonstrating compliance with chapter 69.30 RCW, this chapter, and the NSSP Model Ordinance; and

(d) Pay the department any shellfish operation license fee required by this chapter.

(3) Any person who harvests a commercial quantity of shellfish or any quantity of shellfish for sale for human consumption must possess, or act on behalf of a person who possesses, a valid harvest site certificate. In order for a person to obtain a harvest site certificate, all of the following requirements must be met.

(a) The person possesses a valid shellfish operation license.

(b) The person submits to the department a completed application that describes the following characteristics of the site:

(i) Geographic location;

(ii) Map showing legal boundaries;

(iii) Unique government identification number, such as county parcel number, department of fish and wildlife tract number, department of fish and wildlife catch area number, or tribal identification number; and

(iv) Documentation of legal ownership or lease for shellfish harvesting.

(c) The harvest site is in a growing area that meets the requirements of chapter 69.30 RCW, this chapter, and the NSSP Model Ordinance for a commercial shellfish growing area.

(d) The harvest site is not impacted by any actual or potential sources of pollution.

(e) The harvest site passes a pollution assessment inspection conducted by the department if necessary to determine if the site is impacted by any actual or potential sources of pollution.

(f) The person signs the current conditionally approved area management plan, if applicable.

(g) The person pays the department any harvest site application fee required by this chapter.

(4) All shellfish operation licenses and harvest site certificates for shellfish dealers expire on the thirtieth day of September each year. All shellfish operation licenses and harvest

site certificates for harvesters expire on the thirty-first day of March each year, beginning in 2002.

[Statutory Authority: RCW 69.30.030 and 43.20.030. 01-04-054, § 246-282-012, filed 2/5/01, effective 3/8/01.]

WAC 246-282-014 Operating provisions. (1) Any person who possesses a commercial quantity of shellfish or any quantity of shellfish for sale for human consumption must display a photocopy or original of a valid shellfish operation license, upon request, to any authorized representative of the department, a fish and wildlife patrol officer, or an ex officio patrol officer. Failure to do so subjects the person to the penalty provisions of this chapter, as well as immediate seizure of the shellfish by the representative or officer.

(2) Any person who harvests a commercial quantity of shellfish or any quantity of shellfish for sale for human consumption must display a photocopy or original of a valid harvest site certificate, upon request, to any authorized representative of the department, a fish and wildlife patrol officer, or an ex officio patrol officer. Failure to do so subjects the person to the penalty provisions of this chapter, as well as immediate seizure of the shellfish by the representative or officer.

(3) Any person who places a commercial quantity of shellfish or any quantity of shellfish for sale for human consumption in containers at a harvest site must do so only at a site for which the person possesses a valid harvest site certificate.

(4) The owner(s) of a shellfish operation must designate an individual as the person in charge of the operation. The owner(s) of a shellfish operation that includes one or more harvest sites may designate a different individual as the person in charge of the operation's harvest site(s) than the individual designated as the person in charge of all other phases of the shellfish operation.

(5) The owner(s) and the designated person in charge of a shellfish operation must:

(a) Ensure that at least one individual harvesting shellfish on behalf of the operation at each harvest site carry a copy of both the operation license and the harvest site certificate designating that the site is approved by the department for harvesting by that operation;

(b) Furnish shellfish tags meeting the requirements of chapter 69.30 RCW, these rules, and the NSSP Model Ordinance to those individuals harvesting on behalf of the operation;

(c) Ensure, by supervision at harvest sites or other adequate means, that those individuals working on behalf of the operation harvest only from harvest sites approved by the department for the operation; and

(d) Notify the department if an owner or person in charge has reason to believe that any individual is using the operation's tags, shellfish operation license, or harvest site certificate for any purpose other than one approved by the department.

(6) The designated person in charge of a shellfish operation must have a functioning telephone message device or service issued by a telephone service provider to the owner(s) or person in charge. The person in charge must:

(a) Monitor the device or service each day that the shellfish operation is active, regarding messages from the department about emergency closure of harvest areas or recall of shellfish products; and

(b) Notify the department whenever the telephone number used for this purpose changes; or

(c) Maintain another equivalent method of contact with the department approved in the plan of operations.

[Statutory Authority: RCW 69.30.030 and 43.20.030. 01-04-054, § 246-282-014, filed 2/5/01, effective 3/8/01.]

WAC 246-282-016 Aquaculture. Any person who conducts an aquaculture operation and is in possession of a commercial quantity of shellfish or any quantity of shellfish for sale for human consumption must meet all requirements of this chapter, except such person is exempt from all requirements of this chapter for the purpose of conducting aquaculture activities limited to the following:

(1) A hatchery operation; or

(2) A nursery operation handling only seed that is obtained from a hatchery.

[Statutory Authority: RCW 69.30.030 and 43.20.030. 01-04-054, § 246-282-016, filed 2/5/01, effective 3/8/01.]

WAC 246-282-020 Growing areas. (1) Any person who harvests a commercial quantity of shellfish or any quantity of shellfish for sale for human consumption must do so only from a harvest site that meets one or more of the following conditions:

(a) The department has classified the growing area as "approved" or "conditionally approved," according to provisions of the NSSP Model Ordinance and the harvest site is in open status at the time of harvest;

(b) The department has approved the harvest site according to provisions of a permit for relay, wild seed, or bait;

(c) The harvest site is used for shellfish activities limited to a hatchery or a nursery operation handling only seed obtained from a hatchery; or

(d) The harvest site is used for shellfish activities limited to the initial harvest of seed attached to containerized empty shellfish shells or other cultch material.

(2) The department classifies a shellfish growing area as "restricted" or "prohibited" according to provisions of the NSSP Model Ordinance. However, the department considers classifying a harvest site as "restricted" only when the department has received a valid application for a permit for relay or wild seed harvest from the site.

(3) While a harvest site is in closed status, no person may move shellfish from it to a location outside of the harvest site or above the mean low tide line of the harvest site, unless the department has approved:

(a) Harvesting shellfish by that person from the site according to provisions of a permit for relay, wild seed harvest, or bait harvest; or

(b) Moving shellfish by that person from the site to another site in a natural body of water within the same "conditionally approved" growing area under a written plan of operations.

(4) Harvesting is prohibited from all growing areas unclassified by the department.

[Statutory Authority: RCW 69.30.030 and 43.20.030. 01-04-054, § 246-282-020, filed 2/5/01, effective 3/8/01. Statutory Authority: RCW 43.20.-050. 91-02-051 (Order 124B), recodified as § 246-282-020, filed 12/27/90,

effective 1/31/91. Statutory Authority: RCW 69.30.030 and 43.20.050. 85-21-048 (Order 296), § 248-58-010, filed 10/14/85. Statutory Authority: RCW 69.30.030. 78-08-059 (Order 163), § 248-58-010, filed 7/24/78; Regulation 58.010, effective 3/11/60.]

WAC 246-282-032 Relay permit. (1) The department will issue a relay permit to a person to move shellfish from a harvest site in a growing area classified as "restricted" or "conditionally approved" in closed status meeting the criteria for "restricted" classification, if all of the following conditions are met.

(a) The person possesses a valid shellfish operation license.

(b) The person possesses a valid harvest site certificate listing both the initial harvest site and the grow-out site.

(c) The initial harvest site and grow-out site meet the requirements for relay specified in this chapter and the NSSP Model Ordinance.

(d) The person submits a completed written application and plan of operations approved by the department completely describing the procedures and conditions of the relay operation.

(e) The person conducts and documents a separate validation study approved by the department for each of the following periods of time when shellfish will be relayed:

(i) May 1 through October 31; and

(ii) November 1 through April 30.

(f) The person pays the department a relay permit application fee or renewal fee as required by this chapter.

(2) Each validation study for a relay permit must demonstrate that shellfish harvested from a specified initial site do not contain excessive levels of fecal coliform bacteria and when relayed to a specified grow-out site for a specified time period consistently purge themselves of bacteria to approved levels. Each validation study must meet all of the following conditions.

(a) It must document that the geometric mean fecal coliform bacteria level in a minimum of five 100-gram tissue samples, representative of shellfish of the same species in the entire initial harvest site, is equal to or less than 1300, with no sample having more than 2300.

(b) It must document that specified relay procedures, times, and environmental conditions reduce fecal coliform bacteria in a minimum of five 100-gram tissue samples, representative of the entire lot of shellfish relayed, to levels that are equal to or less than:

(i) 330, with no more than two samples having greater than 230; or

(ii) Ten percent greater than the geometric mean of a minimum of five 100-gram tissue samples representative of the same shellfish species grown continuously for a minimum of six months at the grow-out site.

(c) It must be repeated a minimum of once every twelve years for a continuing operation and whenever relay conditions change.

(d) All samples must be analyzed by an approved laboratory.

(3) A person operating under a relay permit must follow all procedures in the plan of operations approved by the department, including:

(a) Staking or marking the grow-out site to be easily identified by the person until the minimum relay period of time is passed;

(b) Considering the beginning of the minimum relay time period for a lot to be the moment that the last part of the lot is added to the grow-out site;

(c) Relaying shellfish to a designated grow-out site for a minimum of seven days, or longer period of time as approved by the department; and

(d) Keeping records for each relayed lot of shellfish that show a lot identification number; the species, location, date, and quantity moved from the initial harvest site; the grow-out location; and the date of first harvest of any of those shellfish from the grow-out site.

(4) For each lot of shellfish relayed to a site for a grow-out period of less than fourteen days, a person must:

(i) Collect at least one sample from the shellfish lot at the initial harvest site and have it analyzed by an approved laboratory to demonstrate that the lot contains no more than 2300 fecal coliform bacteria per 100 grams of shellfish tissue; and

(ii) Collect at least one sample from the shellfish lot at the grow-out site at the end of the relay period and have it analyzed by an approved laboratory to demonstrate that the lot contains fecal coliform bacteria within the maximum limits determined by a validation study, as described in subsection (2)(b) of this section, before releasing control of the shellfish lot.

(5) A person is exempt from any fees for an initial application and a validation study conducted by the department for a relay permit for the purpose of relaying shellfish from a growing area that the department downgraded from a classification of "approved" or "conditionally approved" to "restricted" within the previous twenty-four months.

(6) A person's relay permit expires on the same date as the person's shellfish operation license.

(7) A person is exempt from the provisions of subsection (1) (e) of this section for the purpose of relaying shellfish to an approved grow-out site for a minimum of six months.

(8) A person possessing a valid shellfish operation license may act as an agent for another person possessing a valid shellfish relay permit for the purpose of harvesting shellfish from the initial harvest site specified in the permit, provided that the agent conducting the harvest is:

(a) Documented in the permit;

(b) In possession of a copy of the permit at the time of harvest; and

(c) Conducting activities described in the written plan of operations approved by the department for the agent's shellfish operation.

[Statutory Authority: RCW 69.30.030 and 43.20.030. 01-04-054, § 246-282-032, filed 2/5/01, effective 3/8/01.]

WAC 246-282-034 Wild seed permit. (1) The department will issue a wild seed permit to a person to move shellfish from a harvest site in a growing area classified by the department as "conditionally approved" in closed status, "restricted," or "prohibited," if all of the following conditions are met.

(a) The person possesses a valid shellfish operation license.

(b) The person possesses a harvest site certificate listing both the initial harvest site for the seed and the grow-out site.

(c) The original harvest site has acceptable levels of poisonous chemicals, is not in an area known to be a hazardous chemical disposal site, and is not in a closure zone of a wastewater treatment plant or marina.

(d) The grow-out site is in a natural body of water classified by the department as "approved" or "conditionally approved."

(e) The person submits a completed written application and plan of operations approved by the department completely describing the procedures of the wild seed operation, including the size distribution of the seed.

(f) The person pays the department a wild seed permit application fee or renewal fee as required by this chapter.

(2) A person operating under a wild seed permit must:

(a) Follow all procedures in the plan of operations approved by the department;

(b) Harvest seed from an area classified as "prohibited" only during daylight hours;

(c) Harvest seed from an area classified as "prohibited" only under direct monitoring by a person approved by the department;

(d) Leave seed in a grow-out site for a minimum of six months before final harvest;

(e) Limit harvest of live shellfish larger than seed size attached to, or commingled with, the seed to less than five percent of the total number of the shellfish harvested from the site;

(f) Place any live shellfish larger than seed size attached to, or commingled with, the seed in the grow-out site for a minimum of six months after initial harvest;

(g) Stake or mark the grow-out site to be easily identified by the person for a minimum of six months from the time of moving to the site any seed attached to, or commingled with, shellfish larger than seed size; and

(h) Keep records for each lot of seed harvested that show a lot identification number; the species, location, date, and quantity moved from the initial harvest site; the grow-out location; and the date of first harvest of any of those shellfish from the grow-out site.

(3) A person's wild seed permit expires on the same date as the person's shellfish operation license.

(4) A person is exempt from the requirements of this section for the activity of harvesting seed attached to containerized empty shellfish shells or other cultch material, provided that the person:

(a) Meets the conditions of subsection (1)(a) through (d) of this section;

(b) Leaves the seed in the grow-out site for a minimum of six months before final harvest; and

(c) Fully describes the seed harvest and grow-out activities in a written plan of operations approved by the department for the person's shellfish operation license.

[Statutory Authority: RCW 69.30.030 and 43.20.030. 01-04-054, § 246-282-034, filed 2/5/01, effective 3/8/01.]

WAC 246-282-036 Bait permit. (1) The department will approve and issue a bait permit to a person to harvest shellfish from a harvest site in a growing area classified by the department as "prohibited," "restricted," or "conditionally approved" in closed status if all of the following conditions are met.

(a) The person possesses a valid shellfish operation license.

(b) The person possesses a valid harvest site certificate for the site.

(c) The harvest site is not impacted by biotoxin levels that would cause the department to close it for harvest for human consumption.

(d) The person submits a completed written application and plan of operations approved by the department completely describing the procedures of the bait operation.

(e) The person pays the department a bait permit application fee or renewal fee as required by this chapter.

(2) A person operating under a bait permit must:

(a) Follow all procedures in the plan of operations approved by the department;

(b) Harvest bait from an area classified as "prohibited" only during daylight hours;

(c) Harvest bait from an area classified as "prohibited" only under direct monitoring by a person approved by the department;

(d) Completely immerse the shellfish in an approved dye that imparts an easily noticeable permanent color to the tissue immediately upon landing the shellfish;

(e) Label each container of shellfish "NOT FOR HUMAN CONSUMPTION - BAIT USE ONLY" prior to removal from the harvest site;

(f) Store the shellfish physically separated from any shellfish intended for human consumption; and

(g) Keep records for each lot of shellfish harvested for use as bait showing a lot identification number, the species, the harvest site, the harvest date, the quantity harvested, the names of all buyers, and the quantity sold to each buyer.

(3) A person's bait permit expires on the same date as the person's shellfish operation license.

(4) Any person possessing a commercial quantity of bait shellfish is exempt from the requirement to obtain a bait permit provided that the person:

(a) Obtains the shellfish from a person with a valid bait permit;

(b) Possesses a sales invoice for the shellfish from a person with a valid bait permit; and

(c) Maintains each container of shellfish prominently labeled "NOT FOR HUMAN CONSUMPTION - BAIT USE ONLY."

[Statutory Authority: RCW 69.30.030 and 43.20.030. 01-04-054, § 246-282-036, filed 2/5/01, effective 3/8/01.]

WAC 246-282-042 Wet storage permit. (1) Any person who wet stores a commercial quantity of shellfish or any quantity of shellfish for sale for human consumption must have a written plan of operations, approved by the department, completely describing the activity.

(2) A person licensed as a harvester may wet store only in a natural body of water that is part of the same growing area as the harvest site of the shellfish.

(3) Any person who operates a recirculating or flow-through wet storage system must possess a wet storage permit issued by the department. A wet storage permit will be issued to a person for a recirculating or flow-through wet storage system if the person:

(a) Possesses a valid shellfish operation license;

(b) Submits a completed written application and plan of operations to the department completely describing the procedures of the wet storage operation;

(c) Documents that the water used for the operation meets the requirements of the NSSP Model Ordinance;

(d) Passes an inspection by the department; and

(e) Pays the department a wet storage application fee or renewal fee as required by this chapter.

(4) If a person uses a natural body of water for a wet storage operation, the person must possess a valid harvest site certificate listing the body of water.

(5) If a person uses artificial seawater for a wet storage operation, the chemicals used to make the seawater must be approved food grade.

(6) A person operating under a wet storage permit must follow all procedures in the plan of operations approved by the department.

(7) A person's wet storage permit expires on the same date as the person's shellfish operation license.

[Statutory Authority: RCW 69.30.030 and 43.20.030. 01-04-054, § 246-282-042, filed 2/5/01, effective 3/8/01.]

WAC 246-282-050 Packing, handling, and storing of shucked shellfish. (1) Any person who packs, handles, or stores shucked shellfish must maintain it at an internal product temperature of forty-five degrees Fahrenheit or less beginning within three hours after it is shucked.

(2) Any person who operates a shucked shellfish repacking plant must meet all the requirements specified in this chapter and the NSSP Model Ordinance for packing plants.

[Statutory Authority: RCW 69.30.030 and 43.20.030. 01-04-054, § 246-282-050, filed 2/5/01, effective 3/8/01. Statutory Authority: RCW 43.20.-050. 91-02-051 (Order 124B), recodified as § 246-282-050, filed 12/27/90, effective 1/31/91. Statutory Authority: RCW 69.30.030. 78-08-059 (Order 163), § 248-58-040, filed 7/24/78; Regulation 58.040, effective 3/11/60.]

WAC 246-282-060 Personal health and cleanliness. (1) Any person ill with or the carrier of a communicable disease which is transmissible through food and is in the infectious stage may not work in any growing area, shucking, packing or repacking plant in any capacity where that person might contaminate the shellfish or food contact surfaces with pathogenic organisms. The owner, the person in charge, and the employee are all responsible for compliance with the requirements of this section.

(2) Any person who is an owner, a person in charge, or an employee of a shellfish operation must practice good personal cleanliness while handling shellfish. These persons must wash their hands thoroughly with soap and water before starting to handle shellfish and as often as is necessary to remove filth and soil that might contaminate shellfish.

(3) If the department determines by investigation that an owner or employee of a shellfish operation might be the source of a foodborne illness transmitted through shellfish, then the secretary may require medical examination of that person and laboratory examination of clinical specimens from that person to determine presence of infection. Any person failing to obtain an examination required by the secretary may not work for a shellfish operation, for a period of time the department determines that person could be infectious, in any capacity that could result in contamination of shellfish with pathogenic organisms.

[Statutory Authority: RCW 69.30.030 and 43.20.030. 01-04-054, § 246-282-060, filed 2/5/01, effective 3/8/01. Statutory Authority: RCW 43.20.-050. 91-02-051 (Order 124B), recodified as § 246-282-060, filed 12/27/90, effective 1/31/91. Statutory Authority: RCW 69.30.030. 78-08-059 (Order 163), § 248-58-050, filed 7/24/78; Regulation 58.050, effective 3/11/60.]

WAC 246-282-070 Construction and maintenance. (1) All owners and persons in charge of shellfish operations must arrange their physical facilities to aid in the flow of shellfish products through all handling, processing, and storage areas in a manner that will minimize contamination of the shellfish.

(2) Any owner of a shellfish operation must submit to the department for consultation properly prepared plans and specifications of physical facilities for shellfish processing or sanitation activities at least thirty days before the facilities are:

(a) Originally constructed;

(b) Converted from another use; or

(c) Extensively remodeled to the extent that a plan for a building permit is required by the city or county where located.

(3) The department will review properly prepared plans and specifications of physical facilities for shellfish processing or sanitation activities required by subsection (2) of this section within thirty days of receipt and provide technical assistance to the owner of the shellfish operation regarding whether the proposed physical facilities would meet the requirements of this chapter.

[Statutory Authority: RCW 69.30.030 and 43.20.030. 01-04-054, § 246-282-070, filed 2/5/01, effective 3/8/01. Statutory Authority: RCW 43.20.-050. 91-02-051 (Order 124B), recodified as § 246-282-070, filed 12/27/90, effective 1/31/91. Statutory Authority: RCW 69.30.030. 78-08-059 (Order 163), § 248-58-060, filed 7/24/78; Regulation 58.060, effective 3/11/60.]

WAC 246-282-080 Identification and records. (1) Any person who possesses a commercial quantity of shellfish or any quantity of shellfish for sale for human consumption must possess a written record documenting that the shellfish came from one or more of the following sources:

(a) Harvest site(s) for which the person possesses a valid harvest site certificate;

(b) Another shellfish operation licensed by the department; or

(c) A shellfish dealer located outside of the state who is in compliance with the requirements of the NSSP Model Ordinance and is eligible for inclusion on the current Interstate Certified Shellfish Shippers List, published by the U.S. Food and Drug Administration.

(2) Any person who possesses a commercial quantity of shellstock or any quantity of shellstock for sale for human consumption must identify the shellstock by an approved tag with permanent marking, according to requirements of the NSSP Model Ordinance, upon removal from the harvest site.

(3) Any person who packs a commercial quantity of shucked shellfish or any quantity of shucked shellfish for sale for human consumption must do so in approved containers that are legibly labeled by permanent marking, in accordance with the requirements of the NSSP Model Ordinance and with:

(a) Wording equivalent to "keep refrigerated" on containers of fresh shellfish; and

(b) Wording equivalent to "keep frozen" on containers of frozen shellfish.

(4) The owner or person in charge of a shellfish operation must keep accurate records of all lots of shellfish harvested, received, wet stored, shucked, packed, shipped, or sold by the shellfish operation for a minimum of three years.

(5) Information recorded by the harvester-shipper shall include: (a) Location of harvesting area(s) by name or code, (b) name and quantity of shellfish, (c) date of harvest, (d) date shipped.

(6) All tags for shellstock and labels for containers of shucked shellfish required by this section must be used only for the original lot of shellfish for which they were intended and must not be reused.

[Statutory Authority: RCW 69.30.030 and 43.20.030. 01-04-054, § 246-282-080, filed 2/5/01, effective 3/8/01. Statutory Authority: RCW 69.30.-030. 92-02-019 (Order 225B), § 246-282-080, filed 12/23/91, effective 1/23/92. Statutory Authority: RCW 43.20.050. 91-02-051 (Order 124B), recodified as § 246-282-080, filed 12/27/90, effective 1/31/91. Statutory Authority: RCW 69.30.030. 78-08-059 (Order 163), § 248-58-070, filed 7/24/78; Regulation 58.070, effective 3/11/60.]

WAC 246-282-082 Export certificate. The department will issue an export certificate to a shellfish dealer for a specific lot of shellfish if the dealer:

(1) Is exporting the lot to an Asian country that requires a production certificate from a governmental health authority;

(2) Possesses a shellfish operation license issued by the secretary;

(3) Is in compliance with the requirements of chapter 69.30 RCW, this chapter, and the NSSP Model Ordinance;

(4) Completes an application specified by the department;

(5) Documents use of each export certificate as specified by the department; and

(6) Pays the department any fee for each export certificate required by this chapter.

[Statutory Authority: RCW 69.30.030 and 43.20.030. 01-04-054, § 246-282-082, filed 2/5/01, effective 3/8/01.]

WAC 246-282-092 Inspection by department. (1) The department enters and inspects any harvest site, physical facility, vehicle or vessel used by a shellfish operation as often as necessary to determine compliance with chapter 69.30 RCW, this chapter, and the NSSP Model Ordinance.

(2) The department inspects each shellfish operation:

(a) A minimum of once per year;

(b) Before issuing a new shellfish operation license to a person;

(c) Before a shellfish operation uses any physical facility for the first time; and

(d) Before the shellfish operation uses any extensively remodeled physical facility.

(3) If the department determines by inspection that an owner, person in charge, or any person working on behalf of the shellfish operation is in violation of any of the requirements of chapter 69.30 RCW, this chapter, or the NSSP Model Ordinance, then the department may conduct a reinspection of the shellfish operation. If the same violation is identified by the department during the reinspection, then another reinspection may be conducted by the department within one month. The department may charge the owner of a shellfish operation a fee for a second or subsequent reinspection.

(4) If necessary to conduct an inspection, then the department may apply to a court of competent jurisdiction for an administrative warrant in accordance with RCW 69.30.120.

(5) During inspections, the department has free and unimpeded access to any of the following in order to determine whether the operation is in compliance with chapter 69.30 RCW, this chapter, and the NSSP Model Ordinance:

(a) Buildings, yards, warehouses, storage facilities, transportation facilities, vehicles, vessels and other places reasonably considered to be or to have been used in connection with the shellfish operation;

(b) Ledgers, books, accounts, memorandums, or records reasonably believed to be or to have been used in connection with the shellfish operation;

(c) Shellfish, shellfish products, components, or other materials reasonably believed to be or to have been used, processed or produced by or in connection with the shellfish operation;

(d) Copies of any documents reasonably believed to be or to have been used in connection with the shellfish operation; and

(e) Samples of shellfish to determine whether they are safe for human consumption.

(6) The department may inspect shellfish growing areas at any time of day and will inspect any other aspect of a shellfish operation:

(a) Between 8:00 a.m. and 5:00 p.m. on any weekday that is not a legal holiday;

(b) During any time the shellfish operation has established as its business hours;

(c) During any time the shellfish operation is open for business or is otherwise in operation; and

(d) During any other time with the consent of the owner or the person in charge of the shellfish operation.

[Statutory Authority: RCW 69.30.030 and 43.20.030. 01-04-054, § 246-282-092, filed 2/5/01, effective 3/8/01.]

WAC 246-282-100 Notice of decision—Adjudicative proceeding. (1) The department's notice of a denial, suspension, modification, or revocation of a license is consistent with RCW 43.70.115. An applicant or license holder has the right to an adjudicative proceeding to contest the decision.

(2) The department's notice of imposition of a civil penalty is consistent with RCW 43.70.095. A person upon whom the department imposes a civil fine has the right to an adjudicative proceeding to contest the decision.

(3) A license applicant or holder or a person upon whom the department imposes a civil penalty, may contest a department decision, within twenty-eight days of receipt of the decision by filing a written application for an adjudicative proceeding by a method showing proof of receipt with the administrative hearings unit, department of health. The person must include the following in or with the application:

(a) A specific statement of the issue or issues and law involved;

(b) The grounds for contesting the department decision; and

(c) A copy of the contested department decision.

(4) An adjudicative proceeding is governed by the Administrative Procedure Act (chapter 34.05 RCW), this chapter, and chapter 246-08 WAC. If a provision in this chapter conflicts with chapter 246-08 WAC, the provision in this chapter governs.

[Statutory Authority: RCW 69.30.030 and 43.20.030. 01-04-054, § 246-282-100, filed 2/5/01, effective 3/8/01. Statutory Authority: RCW 69.30.-030. 92-02-019 (Order 225B), § 246-282-100, filed 12/23/91, effective 1/23/92. Statutory Authority: RCW 43.20.050. 91-02-051 (Order 124B), recodified as § 246-282-100, filed 12/27/90, effective 1/31/91. Statutory Authority: Chapter 34.05 RCW and RCW 69.30.030. 90-06-049 (Order 040), § 248-58-085, filed 3/2/90, effective 3/2/90.]

WAC 246-282-102 Denial, revocation, suspension of license, certificate, or permit—Civil penalties. (1) The department may deny, revoke, or suspend a shellfish operation license, harvest site certificate, or permit and may assess a civil penalty if a person:

(a) Fails to comply with any of the provisions of chapter 69.30 RCW, these rules, and the NSSP Model Ordinance;

(b) Refuses an inspection by the department;

(c) Harvests shellfish from any harvest site for which the secretary has not issued a harvest site certificate to the person;

(d) Knowingly obtains shellfish from a person who is not in compliance with any requirements of chapter 69.30 RCW, this chapter, or the NSSP Model Ordinance;

(e) Makes false statements or misrepresentations to the department during any investigation, inspection, or application for a shellfish operation license or any permit required by these rules;

(f) Makes false statements or misrepresentations to the department during any investigation, inspection, or application for a shellfish harvest site certificate;

(g) Fails to cooperate with the department or the department of fish and wildlife during an investigation;

(h) Aids another person in violating any requirement of chapter 69.30 RCW, these rules, or the NSSP Model Ordinance;

(i) Provides the department with false or fraudulent records of the shellfish operation;

(j) Transfers or reassigns a shellfish operation license to another person without the written approval of the department; or

(k) Fails to comply with the terms of a conditional area management plan, shellfish operation license, harvest site certificate, or any permit required by this chapter.

(2) Violations of chapter 69.30 RCW, these rules, or the NSSP Model Ordinance committed by a person in charge, employee, or agent of a person issued a shellfish operation license may be treated by the department as a violation committed by the licensee.

[Statutory Authority: RCW 69.30.030 and 43.20.030. 01-04-054, § 246-282-102, filed 2/5/01, effective 3/8/01.]

WAC 246-282-104 Penalty assignment—Calculation of penalty and proportionate adjustment—Aggravating and mitigating factors. (1) The department calculates an appropriate penalty based on the following factors:

(a) The level of threat to public health;

(b) The number of previous violations attributed to the violator; and

(c) The presence of aggravating or mitigating factors.

(2) The department determines administrative penalties from the range in the following penalty schedule. The standard penalty is assessed unless a proportionate adjustment is warranted and/or there are aggravating or mitigating factors present.

Penalty Schedule

NUMBER OF PREVIOUS VIOLATIONS	ADJUSTMENT FACTORS	PUBLIC HEALTH THREAT		
		LOW License Action/ Civil Penalty	INTERMEDIATE License Action/ Civil Penalty	HIGH License Action/ Civil Penalty
0	Mitigated	0 Months/$150	0 Months/$300	3 Months/$350
	Standard	0 Months/$200	1 Month/$350	6 Months/$400
	Aggravated	1 Month/$250	3 Months/$400	9 Months/$450
1	Mitigated	0 Months/$200	1 Month/$350	6 Months/$400
	Standard	0 Months/$250	3 Months/$400	9 Months/$450
	Aggravated	3 Months/$300	6 Months/$450	12 Months/$500
2	Mitigated	0 Months/$250	3 Months/$400	12 Months/$500
	Standard	3 Months/$300	6 Months/$450	18 Months/$500
	Aggravated	6 Months/$350	9 Months/$500	24 Months/$500
3 or More	Mitigated	3 Months/$300	6 Months/$450	18 Months/$500
	Standard	6 Months/$350	9 Months/$500	24 Months/$500
	Aggravated	9 Months/$400	12 Months/$500	36 Months/$500

(3) The department reserves the right to proportionately increase the civil penalty and decrease the license action under certain circumstances. These circumstances include situations where license actions as a deterrent are ineffective and include, but are not limited to, violations by persons who are not licensed.

(4) The department reserves the right to proportionately decrease the civil penalty and increase the license action when circumstances in a particular case demonstrate the ineffectiveness of a civil penalty as a deterrent.

(5)(a) When assessing a civil penalty or license action, the department considers any previous violation(s) for the

following period of time, depending on the severity of the previous violation(s):

(i) Three years for low public health threat;

(ii) Five years for intermediate public health threat; or

(iii) No limit for high public health threat.

(b) The time period will begin on the date of adjudication or settlement of the previous violation(s), rather than the date on which the incident or conduct occurred.

(6) The department considers circumstances that increase the seriousness of a violation, including, but not limited to, the following aggravating factors:

(a) The extent to which the violation is part of a pattern of the same or substantially similar conduct;

(b) The extent to which previous education, technical assistance, or notice of correction has been provided for the same or substantially similar conduct; and

(c) The extent to which the violation caused serious and actual injury or death to a person or persons.

(7) If the department determines that one or more aggravating factors are present, then the department may assess the aggravated penalty or may increase the penalty to a level greater than listed in the penalty schedule, including, but not limited to, revocation of the license.

(8) The department will consider circumstances that decrease the seriousness of a violation, including, but not limited to, the following mitigating factors:

(a) Voluntary disclosure of the violation;

(b) Complete cooperation and voluntary disclosure during the investigation of the violation; and

(c) Voluntary taking of remedial measures that will result in increased public health protection and that will result in a decreased likelihood that the violation will be repeated and that other violations will occur.

(9) If the department determines that one or more mitigating factors are present, then the department may assess the mitigated penalty or may decrease the penalty to a level less than listed in the penalty schedule.

(10) The maximum civil penalty that may be imposed by the department is five hundred dollars per day for each violation.

(11) The department considers each violation to be a separate and distinct event. Each day a violation is continued is a separate and distinct violation. When a person has committed multiple violations, the violations are cumulative for purposes of calculating the appropriate penalty. Penalties are added together, rather than served concurrently.

(12) Nothing in this section prevents the department from responding to a violation by:

(a) Declining to pursue an administrative penalty;

(b) Issuing a notice of correction instead of pursuing an administrative penalty; or

(c) Negotiating settlement of a case on such terms and for such reason as the department deems appropriate. Violations covered by a prior settlement agreement may be used for the purpose of determining the appropriate penalty for the current alleged violation(s), unless prohibited by the prior settlement agreement.

[Statutory Authority: RCW 69.30.030 and 43.20.030. 01-04-054, § 246-282-104, filed 2/5/01, effective 3/8/01.]

WAC 246-282-110 Administrative provisions. (1) If the department finds during an inspection that any owner or person working on behalf of a shellfish operation fails to comply with any requirements of chapter 69.30 RCW, this chapter, or the NSSP Model Ordinance, then the department may issue a written statement of deficiencies or notice of correction to the owner, person in charge, or other employee of the operation who is present.

(a) The statement of deficiencies or notice of correction specifies the manner in which the operation fails to comply with chapter 69.30 RCW and these rules. It specifies a reasonable period of time for the owner or person in charge to correct the violation(s).

(b) In the event the owner or person in charge fails to correct the violation(s) specified in the statement of deficiencies, the department may revoke the license and certificate of compliance for that shellfish operation or may initiate any other enforcement proceeding authorized by law.

(2) Any authorized representative of the department, fish and wildlife patrol officer or ex officio patrol officer may, without previously providing a statement of deficiencies, immediately seize shellfish or issue written hold orders prohibiting the disposition or sale of shellfish whenever a commercial quantity of shellfish or any amount of shellfish for sale for human consumption is on the premises of, or in the possession of, any person who:

(a) Fails to display an original or photocopy of a valid shellfish operation license;

(b) Is reasonably expected to have harvested the shellfish and fails to display an original or photocopy of a valid shellfish operation license and a valid harvest site certificate; or

(c) Fails to maintain each container of shellfish properly tagged or labeled as required by chapter 69.30 RCW, these rules, and the NSSP Model Ordinance.

(3) If the department determines during an inspection or investigation that there is reasonable cause to believe that shellfish is potentially unsafe for human consumption, then the department may issue a hold order prohibiting the disposition or sale of the shellfish pending further investigation by the department of the safety of the shellfish.

(a) The department must complete its further investigation within ten days.

(b) At the conclusion of the investigation, the department may release the shellfish for sale or issue a written abatement order regarding the shellfish.

(c) Any person in possession of shellfish for which the department has issued a hold order must store the shellfish in a suitable place prescribed by the department and prevent the shellfish from being offered for human consumption or other use until:

(i) The hold order is lifted by the department or by a court of competent jurisdiction; or

(ii) The person disposes of the shellfish in accordance with an abatement order issued by the department.

(4) Shellfish that the department seizes or places under a hold order and determines are unsafe for human consumption are subject to such abatement as the department considers appropriate. The department may require any one or more of the following measures be taken by a person in possession of shellfish that are the subject of an abatement order:

(a) Permanent prohibition on the disposition of the shellfish for human consumption;

(b) Immediate destruction of the shellfish by measures such as denaturing and placing in a sanitary landfill, witnessed by an authorized representative of the department who provides a record of destruction to the person; or

(c) Temporary prohibition on the disposition of the shellfish for human consumption pending relay to an approved growing area for a sufficient period of time to assure natural purification of the shellfish.

(5) The secretary may issue an abatement order to the owner or person in charge of a shellfish operation whenever the department, after conducting an appropriate investigation, determines that a shellfish operation, or person working on behalf of a shellfish operation, presents a potential risk for transmitting an infectious disease to consumers of shellfish.

(a) The secretary may require any or all of the following measures be taken by the owner or person in charge of a shellfish operation who is issued the abatement order:

(i) Immediate closure of the shellfish operation until, in the opinion of the secretary, no further danger of a disease outbreak exists;

(ii) Immediate exclusion of any person suspected to be infected with a disease agent transmissible through food from all activities with the shellfish operation; and

(iii) Restriction of the activities of any person who is suspected to be infected with a disease agent transmissible through food to some area of the shellfish operation where there would be no danger of the person transmitting disease agents to shellfish consumers.

(b) As an alternative to the abatement order described in this section, the secretary may require the owner, or any person working on behalf of the shellfish operation to submit to adequate medical and laboratory examinations, including examination of their bodily discharges as needed to determine if the person is infected with a microbial agent transmissible through food.

(6) No person may remove or alter a notice or tag constituting a hold order or abatement order placed on shellfish by the department.

(7) No person may relabel, repack, reprocess, alter, dispose of, destroy, or release shellfish or containers of shellfish for which the department has issued a hold order or abatement order without:

(a) Permission of the department; or

(b) An order by a court of competent jurisdiction.

(8) If the owner or person in charge of a shellfish operation fails to comply with a hold order or an abatement order issued according to this section, then the department may revoke the license of the shellfish operation or initiate other legal enforcement proceedings authorized by law.

[Statutory Authority: RCW 69.30.030 and 43.20.030. 01-04-054, § 246-282-110, filed 2/5/01, effective 3/8/01. Statutory Authority: RCW 43.20.-050. 91-02-051 (Order 124B), recodified as § 246-282-110, filed 12/27/90, effective 1/31/91. Statutory Authority: RCW 69.30.030 and 43.20.050. 85-21-048 (Order 296), § 248-58-090, filed 10/14/85. Statutory Authority: RCW 69.30.030. 78-08-059 (Order 163), § 248-58-090, filed 7/24/78; Regulation 58.090, effective 3/11/60.]

WAC 246-282-120 Penalty clause. Any person found violating any of the provisions of these regulations or chapter 69.30 RCW is guilty of a gross misdemeanor, and upon conviction will be subject to:

(1) A fine; or

(2) Imprisonment in the county jail of the county in which the offense was committed; or

(3) Both fine and imprisonment.

[Statutory Authority: RCW 69.30.030 and 43.20.030. 01-04-054, § 246-282-120, filed 2/5/01, effective 3/8/01. Statutory Authority: RCW 43.20.-050. 91-02-051 (Order 124B), recodified as § 246-282-120, filed 12/27/90, effective 1/31/91. Statutory Authority: RCW 69.30.030 and 43.20.050. 85-21-048 (Order 296), § 248-58-500, filed 10/14/85. Statutory Authority: RCW 69.30.030. 78-08-059 (Order 163), § 248-58-500, filed 7/24/78.]

WAC 246-282-130 Separability clause. Should any section, paragraph, clause or phrase of these rules and regulations be declared unconstitutional or invalid for any reason, the remainder of these rules and regulations are not affected.

[Statutory Authority: RCW 69.30.030 and 43.20.030. 01-04-054, § 246-282-130, filed 2/5/01, effective 3/8/01. Statutory Authority: RCW 43.20.-050. 91-02-051 (Order 124B), recodified as § 246-282-130, filed 12/27/90, effective 1/31/91. Statutory Authority: RCW 69.30.030. 78-08-059 (Order 163), § 248-58-900, filed 7/24/78.]

WAC 246-282-990 Fees. (1) Annual shellfish operation license fees are:

Type of Operation	Annual Fee
Harvester	$263
Shellstock Shipper	
0 - 49 Acres	$297
50 or greater Acres	$476
Scallop Shellstock Shipper	$297
Shucker-Packer	
Plants with floor space < 2000 sq. ft.	$542
Plants with floor space 2000 sq. ft. to 5000 sq. ft.	$656
Plants with floor space > 5000 sq. ft.	$1,210

(2) The fee for each export certificate is $10.30.

(3) Annual PSP testing fees for companies harvesting species other than geoduck intertidally (between the extremes of high and low tide) are as follows:

Fee Category

Type of Operation	Number of Harvest Sites	Fee
Harvester	≤ 2	$173
Harvester	3 or more	$259
Shellstock Shipper 0 - 49 acres	≤ 2	$195
Shellstock Shipper 0 - 49 acres	3 or more	$292
Shellstock Shipper 50 or greater acres	N/A	$468
Shucker-Packer (plants < 2000 ft^2)	≤ 2	$354
Shucker-Packer (plants < 2000 ft^2)	3 or more	$533
Shucker-Packer (plants 2000 - 5000 ft^2)	≤ 2	$429
Shucker-Packer (plants 2000 - 5000 ft^2)	3 or more	$644

Fee Category

Type of Operation	Number of Harvest Sites	Fee
Shucker-Packer (plants > 5000 ft²)	N/A	$1,189

(a) The number of harvest sites will be the total number of harvest sites on the licensed company's harvest site certificate:

(i) At the time of first licensure; or

(ii) January 1 of each year for companies licensed as harvesters; or

(iii) July 1 of each year for companies licensed as shellstock shippers and shucker packers.

(b) Two or more contiguous parcels with a total acreage of one acre or less is considered one harvest site.

(4) Annual PSP testing fees for companies harvesting geoduck are as follows:

Harvester	Fee
Department of natural resources (quota tracts harvested by DNR contract holders)	$12,094
Jamestown S'Klallam Tribe	$4,682
Lower Elwah Klallam Tribe	$2,991
Lummi Nation	$390
Nisqually Indian Tribe	$3,121
Port Gamble S'Klallam Tribe	$3,121
Puyallup Tribe of Indians	$8,453
Skokomish Indian Tribe	$260
Squaxin Island Tribe	$4,151
Suquamish Tribe	$13,665
Swinomish Tribe	$390
Tulalip Tribe	$4,552
Discovery Bay Shellfish	$130

(5) PSP fees must be paid in full to department of health before a commercial shellfish license is issued or renewed.

(6) Refunds for PSP fees will be given only if the applicant withdraws a new or renewal license application prior to the effective date of the new or renewed license.

[Statutory Authority: RCW 43.70.250. 08-13-067, § 246-282-990, filed 6/13/08, effective 7/14/08; 07-17-159, § 246-282-990, filed 8/21/07, effective 9/21/07; 06-15-131, § 246-282-990, filed 7/19/06, effective 8/19/06; 05-17-120, § 246-282-990, filed 8/17/05, effective 9/17/05; 04-15-154, § 246-282-990, filed 7/21/04, effective 8/21/04; 03-18-093, § 246-282-990, filed 9/2/03, effective 10/3/03. Statutory Authority: RCW 43.70.250 and 34.70.-250 [43.70.250]. 03-14-037, § 246-282-990, filed 6/23/03, effective 7/24/03. Statutory Authority: RCW 43.70.250 and the 2002 supplemental operating budget. 02-15-094, § 246-282-990, filed 7/16/02, effective 8/16/02. Statutory Authority: RCW 43.70.250, 70.90.150, and 43.20B.250. 01-14-047, § 246-282-990, filed 6/29/01, effective 7/30/01. Statutory Authority: RCW 69.30.030 and 43.20.030. 01-04-054, § 246-282-990, filed 2/5/01, effective 3/8/01. Statutory Authority: RCW 43.70.250. 00-02-016, § 246-282-990, filed 12/27/99, effective 1/27/00; 99-12-022, § 246-282-990, filed 5/24/99, effective 6/24/99. Statutory Authority: RCW 43.20B.020 and 69.30.030. 98-12-068, § 246-282-990, filed 6/1/98, effective 7/2/98. Statutory Authority: RCW 43.203.020 [43.20B.020]. 97-12-031, § 246-282-990, filed 5/30/97, effective 6/30/97. Statutory Authority: RCW 43.20B.020 and 69.30.030. 96-16-073, § 246-282-990, filed 8/6/96, effective 10/1/96. Statutory Authority: RCW 43.70.040. 93-17-096 (Order 389), § 246-282-990, filed 8/17/93, effective 9/17/93; 91-02-049 (Order 121), recodified as § 246-282-990, filed 12/27/90, effective 1/31/91. Statutory Authority: RCW 43.20A.055. 85-12-029 (Order 2236), § 440-44-065, filed 5/31/85; 84-13-006 (Order 2109), § 440-44-065, filed 6/7/84; 83-15-021 (Order 1991), § 440-44-065, filed 7/14/83. Statutory Authority: 1982 c 201. 82-13-011 (Order 1825), § 440-44-065, filed 6/4/82.]

Chapter 246-290 WAC
GROUP A PUBLIC WATER SUPPLIES

WAC

PART 1.
GENERAL PROVISIONS

246-290-001 Purpose and scope.
246-290-002 Guidance.
246-290-010 Definitions.
246-290-020 Applicability.
246-290-025 Adoption by reference.
246-290-030 General administration.
246-290-035 Water system ownership.
246-290-040 Engineering requirements.
246-290-050 Enforcement.
246-290-060 Variances, exemptions, and waivers.

PART 2.
PLANNING AND ENGINEERING DOCUMENTS

246-290-100 Water system plan.
246-290-105 Small water system management program.
246-290-106 Duty to provide service.
246-290-107 Place of use expansion.
246-290-108 Consistency with local plans and regulations.
246-290-110 Project report.
246-290-120 Construction documents.
246-290-125 Project report and construction document submittal exceptions.
246-290-130 Source approval.
246-290-132 Interties.
246-290-135 Source water protection.
246-290-140 Existing system as-built approval.

PART 3.
DESIGN OF PUBLIC WATER SYSTEMS

246-290-200 Design standards.
246-290-220 Drinking water materials and additives.
246-290-221 Water demand design criteria.
246-290-222 Water system physical capacity.
246-290-230 Distribution systems.
246-290-235 Finished water storage facilities.
246-290-250 Treatment design.

PART 4.
WATER QUALITY

246-290-300 Monitoring requirements.
246-290-310 Maximum contaminant levels (MCLs) and maximum residual disinfectant levels (MRDLs).
246-290-320 Follow-up action.

PART 5.
WATER SYSTEM OPERATIONS

246-290-415 Operations and maintenance.
246-290-416 Sanitary surveys.
246-290-420 Reliability and emergency response.
246-290-451 Disinfection of drinking water.
246-290-455 Operation of chemical contaminant treatment facilities.
246-290-460 Fluoridation of drinking water.
246-290-470 Uncovered finished water storage facilities.
246-290-480 Recordkeeping and reporting.
246-290-490 Cross-connection control.
246-290-496 Metering requirements.
246-290-500 Severability.

PART 6.
SURFACE WATER TREATMENT

Subpart A - Introduction and General Requirements

246-290-601 Purpose of surface water treatment.
246-290-620 Applicability of surface water treatment requirements.
246-290-630 General requirements.
246-290-632 Treatment technique violations.
246-290-634 Follow-up to treatment technique violations.
246-290-636 Determination of disinfectant contact time (T).
246-290-638 Analytical requirements.
246-290-639 SWTR records.
246-290-640 Determination of GWI sources.

Subpart B - Requirements for Filtered Systems

246-290-650 Compliance requirements for filtered systems.

246-290-652 Filtration technology and design criteria for existing filtered systems.
246-290-654 Treatment criteria for filtered systems.
246-290-660 Filtration.
246-290-662 Disinfection for filtered systems.
246-290-664 Monitoring for filtered systems.
246-290-666 Reporting for filtered systems.
246-290-668 Watershed control.

Subpart C - Requirements for Systems Installing Filtration Facilities

246-290-670 Compliance requirements for existing unfiltered systems installing filtration.
246-290-672 Interim treatment requirements.
246-290-674 Interim monitoring and reporting.
246-290-676 Filtration technology and design criteria.
246-290-678 Reliability for filtered systems.

Subpart D - Requirements for Other Unfiltered Systems

246-290-686 Compliance requirements for unfiltered systems.
246-290-690 Criteria to remain unfiltered.
246-290-691 Criteria for unfiltered systems with a "limited alternative to filtration" to remain unfiltered.
246-290-692 Disinfection for unfiltered systems.
246-290-694 Monitoring for unfiltered systems.
246-290-696 Reporting for unfiltered systems.

PART 7.
REPORTING

Subpart A - Public Notification and Consumer Information

246-290-71001 Public notification.
246-290-71002 Public notice content.
246-290-71003 Public notification distribution.
246-290-71004 Public notification mandatory language.
246-290-71005 Special public notification requirements.
246-290-71006 Consumer information.
246-290-71007 Public notification special provisions.

Subpart B - Consumer Confidence Reports

246-290-72001 Purpose and applicability of the consumer confidence report requirements.
246-290-72002 Reporting dates.
246-290-72003 Report contents—Source water.
246-290-72004 Report contents—Definitions.
246-290-72005 Report contents—Information on detected contaminants.
246-290-72006 Report contents—Information on Cryptosporidium, radon, and other contaminants.
246-290-72007 Report contents—Compliance with National Primary Drinking Water Regulations.
246-290-72008 Report contents—Variances and exemptions.
246-290-72009 Report contents—Additional information.
246-290-72010 Report contents—Required additional health information.
246-290-72011 Report delivery and recordkeeping.
246-290-72012 Regulated contaminants.

PART 8.
WATER USE EFFICIENCY

246-290-800 Purpose and applicability.
246-290-810 Water use efficiency program.
246-290-820 Distribution system leakage standard.
246-290-830 Water use efficiency goal setting.
246-290-840 Water use efficiency performance reports.

FEES

246-290-990 Water system evaluation and project review and approval fees.

DISPOSITION OF SECTIONS FORMERLY CODIFIED IN THIS CHAPTER

246-290-115 Corrosion control recommendation report. [Statutory Authority: RCW 43.20.050. 94-14-001, § 246-290-115, filed 6/22/94, effective 7/23/94.] Repealed by 99-07-021, filed 3/9/99, effective 4/9/99. Statutory Authority: RCW 43.02.050 [43.20.050].

246-290-210 Source protection. [Statutory Authority: RCW 43.20.-050. 91-02-051 (Order 124B), recodified as § 246-290-210, filed 12/27/90, effective 1/31/91. Statutory Authority: RCW 34.04.045. 88-05-057 (Order 307), § 248-54-125, filed 2/17/88. Statutory Authority: RCW 43.20.-050. 83-19-002 (Order 266), § 248-54-125, filed 9/8/83.] Repealed by 93-08-011 (Order 352B), filed 3/25/93, effective 4/25/93. Statutory Authority: RCW 43.20.050.

246-290-240 Disinfection of facilities. [Statutory Authority: RCW 43.20.050. 91-02-051 (Order 124B), recodified as § 246-290-240, filed 12/27/90, effective 1/31/91. Statutory Authority: RCW 34.04.045. 88-05-057 (Order 307), § 248-54-145, filed 2/17/88. Statutory Authority: RCW 43.20.050. 83-19-002 (Order 266), § 248-54-145, filed 9/8/83.] Repealed by 99-07-021, filed 3/9/99, effective 4/9/99. Statutory Authority: RCW 43.02.050 [43.20.050].

246-290-330 Public notification. [Statutory Authority: RCW 43.20.-050. 94-14-001, § 246-290-330, filed 6/22/94, effective 7/23/94; 93-08-011 (Order 352B), § 246-290-330, filed 3/25/93, effective 4/25/93; 92-04-070 (Order 241B), § 246-290-330, filed 2/4/92, effective 3/6/92. Statutory Authority: Chapter 43.20 RCW. 91-07-031 (Order 150B), § 246-290-330, filed 3/15/91, effective 4/15/91. Statutory Authority: RCW 43.20.050. 91-02-051 (Order 124B), recodified as § 246-290-330, filed 12/27/90, effective 1/31/91. Statutory Authority: P.L. 99-339. 89-21-020 (Order 336), § 248-54-187, filed 10/10/89, effective 11/10/89.] Repealed by 99-07-021, filed 3/9/99, effective 4/9/99. Statutory Authority: RCW 43.02.050 [43.20.050].

246-290-400 Operator certification. [Statutory Authority: RCW 43.20.050. 91-02-051 (Order 124B), recodified as § 246-290-400, filed 12/27/90, effective 1/31/91. Statutory Authority: RCW 34.04.045. 88-05-057 (Order 307), § 248-54-194, filed 2/17/88.] Repealed by 93-08-011 (Order 352B), filed 3/25/93, effective 4/25/93. Statutory Authority: RCW 43.20.050.

246-290-410 Small water system management program. [Statutory Authority: RCW 43.20.050. 94-14-001, § 246-290-410, filed 6/22/94, effective 7/23/94; 91-02-051 (Order 124B), recodified as § 246-290-410, filed 12/27/90, effective 1/31/91. Statutory Authority: P.L. 99-339. 89-21-020 (Order 336), § 248-54-196, filed 10/10/89, effective 11/10/89. Statutory Authority: RCW 34.04.-045. 88-05-057 (Order 307), § 248-54-196, filed 2/17/88.] Repealed by 99-07-021, filed 3/9/99, effective 4/9/99. Statutory Authority: RCW 43.02.050 [43.20.-050].

246-290-430 Continuity of service. [Statutory Authority: RCW 43.20.050. 91-02-051 (Order 124B), recodified as § 246-290-430, filed 12/27/90, effective 1/31/91. Statutory Authority: RCW 34.04.045. 88-05-057 (Order 307), § 248-54-205, filed 2/17/88. Statutory Authority: RCW 43.20.050. 83-19-002 (Order 266), § 248-54-205, filed 9/8/83.] Repealed by 99-07-021, filed 3/9/99, effective 4/9/99. Statutory Authority: RCW 43.02.050 [43.20.050].

246-290-440 Operations. [Statutory Authority: RCW 43.20.050. 94-14-001, § 246-290-440, filed 6/22/94, effective 7/23/94; 93-08-011 (Order 352B), § 246-290-440, filed 3/25/93, effective 4/25/93; 91-02-051 (Order 124B), recodified as § 246-290-440, filed 12/27/90, effective 1/31/91. Statutory Authority: RCW 34.04.045. 88-05-057 (Order 307), § 248-54-215, filed 2/17/88. Statutory Authority: RCW 43.20.050. 83-19-002 (Order 266), § 248-54-215, filed 9/8/83.] Repealed by 99-07-021, filed 3/9/99, effective 4/9/99. Statutory Authority: RCW 43.02.050 [43.20.050].

246-290-450 Watershed control. [Statutory Authority: RCW 43.20.-050. 91-02-051 (Order 124B), recodified as § 246-290-450, filed 12/27/90, effective 1/31/91. Statutory Authority: RCW 34.04.045. 88-05-057 (Order 307), § 248-54-225, filed 2/17/88. Statutory Authority: RCW 43.20.-050. 83-19-002 (Order 266), § 248-54-225, filed 9/8/83.] Repealed by 93-08-011 (Order 352B), filed 3/25/93, effective 4/25/93. Statutory Authority: RCW 43.20.050.

246-290-495 Public notification. [Statutory Authority: RCW 43.02.-050 [43.20.050]. 99-07-021, § 246-290-495, filed 3/9/99, effective 4/9/99.] Repealed by 03-08-037, filed 3/27/03, effective 4/27/03. Statutory Authority: RCW 43.20.050 (2) and (3) and 70.119A.080.

246-290-610 Definitions relating to surface water treatment. [Statutory Authority: RCW 43.20.050. 93-08-011 (Order 352B), § 246-290-610, filed 3/25/93, effective 4/25/93.]

Repealed by 99-07-021, filed 3/9/99, effective 4/9/99. Statutory Authority: RCW 43.02.050 [43.20.050].

246-290-680 Operating criteria for new water treatment facilities. [Statutory Authority: RCW 43.20.050. 93-08-011 (Order 352B), § 246-290-680, filed 3/25/93, effective 4/25/93.] Repealed by 97-20-100, filed 9/29/97, effective 10/30/97. Statutory Authority: RCW 43.20.050.

PART 1.
GENERAL PROVISIONS

WAC 246-290-001 Purpose and scope. (1) The purpose of this chapter is to define basic regulatory requirements and to protect the health of consumers using public drinking water supplies.

(2) The rules of this chapter are specifically designed to ensure:

(a) Adequate design, construction, sampling, management, maintenance, and operation practices; and

(b) Provision of safe and high quality drinking water in a reliable manner and in a quantity suitable for intended use.

(3) Purveyors shall be responsible for complying with the regulatory requirements of this chapter.

(4) These rules are intended to conform with Public Law 93-523, the Federal Safe Drinking Water Act of 1974, and Public Law 99-339, the Safe Drinking Water Act Amendments of 1986, and certain provisions of Public Law 104-182, the Safe Drinking Water Act Amendments of 1996.

(5) The rules set forth are adopted under chapter 43.20 RCW. Other statutes relating to this chapter are:

(a) RCW 43.20B.020, Fees for services—Department of health and department of social and health services;

(b) Chapter 43.70 RCW, Department of health;

(c) Chapter 70.05 RCW, Local health department, boards, officers—Regulations;

(d) Chapter 70.116 RCW, Public Water System Coordination Act of 1977;

(e) Chapter 70.119 RCW, Public water supply systems—Certification and regulation of operators;

(f) Chapter 70.119A RCW, Public water systems—Penalties and compliance; and

(g) Chapter 70.142 RCW, Chemical contaminants and water quality.

[Statutory Authority: RCW 43.02.050 [43.20.050]. 99-07-021, § 246-290-001, filed 3/9/99, effective 4/9/99. Statutory Authority: RCW 43.20.050. 93-08-011 (Order 352B), § 246-290-001, filed 3/25/93, effective 4/25/93; 91-02-051 (Order 124B), recodified as § 246-290-001, filed 12/27/90, effective 1/31/91. Statutory Authority: P.L. 99-339. 89-21-020 (Order 336), § 248-54-005, filed 10/10/89, effective 11/10/89. Statutory Authority: RCW 34.04.045. 88-05-057 (Order 307), § 248-54-005, filed 2/17/88. Statutory Authority: RCW 43.20.050. 83-19-002 (Order 266), § 248-54-005, filed 9/8/83.]

WAC 246-290-002 Guidance. (1) The department has numerous guidance documents available to help purveyors comply with state and federal rules regarding drinking water. These include documents on the following subjects:

(a) Compliance;

(b) Consumer and public education;

(c) Contaminants;

(d) Cross-connection control and backflow prevention;

(e) Emergency response and drinking water security;

(f) Engineering design and water treatment;

(g) Financial assistance and state revolving fund (SRF);

(h) General information;

(i) Ground water protection;

(j) Growth management;

(k) Operations and maintenance;

(l) Operator certification;

(m) Planning and financial viability;

(n) Regulations;

(o) Small water systems;

(p) System approval;

(q) Water quality monitoring and source protection;

(r) Water system planning; and

(s) Water use efficiency.

(2) The department's guidance documents are available at minimal or no cost by contacting the office of drinking water's publication service at 360-236-3100 or 800-521-0323. Individuals can also request the documents via the internet at http://www.doh.wa.gov/ehp/dw or through conventional mail at P.O. Box 47822, Olympia, Washington 98504-7822.

(3) Federal guidance documents are available from the Environmental Protection Agency (EPA) for a wide range of topics. These are available from the EPA Office of Ground Water and Drinking Water web site at www.epa.gov/safewater/index.html.

[Statutory Authority: RCW 70.119A.180 and 43.20.050. 08-03-061, § 246-290-002, filed 1/14/08, effective 2/14/08. Statutory Authority: RCW 43.20.-050 (2) and (3) and 70.119A.080. 03-08-037, § 246-290-002, filed 3/27/03, effective 4/27/03. Statutory Authority: RCW 43.02.050 [43.20.050]. 99-07-021, § 246-290-002, filed 3/9/99, effective 4/9/99.]

WAC 246-290-010 Definitions. Abbreviations and acronyms:

ADD - average day demand;

AG - air gap;

ANSI - American National Standards Institute;

AVB - atmospheric vacuum breaker;

AWWA - American Water Works Association;

BAT - backflow assembly tester;

C - residual disinfectant concentration in mg/L;

CCS - cross-connection control specialist;

CFR - code of federal regulations;

CPE - comprehensive performance evaluation;

CT - the mathematical product in mg/L - minutes of "C" and "T";

CTA - comprehensive technical assistance;

CWSSA - critical water supply service area;

DBPs - disinfection by-products;

DCDA - double check detector assembly;

DCVA - double check valve assembly;

DVGW - Deutsche Vereinigung des Gas und Wasserfaches;

EPA - Environmental Protection Agency;

ERU - equivalent residential unit;

gph - gallons per hour;

gpm - gallons per minute;

GAC - granular activated carbon;

GAC10 - granular activated carbon with ten-minute empty bed contact time based on average daily flow and one hundred eighty-day reactivation frequency;

GWI - ground water under the direct influence of surface water;

HAA5 - haloacetic acids (five);
HPC - heterotrophic plate count;
IAPMO - International Association of Plumbing and Mechanical Officials;
kPa - kilo pascal (SI units of pressure);
MCL - maximum contaminant level;
MDD - maximum day demand;
mg/L - milligrams per liter (1 mg/L = 1 ppm);
mL - milliliter;
mm - millimeter;
MRDL - maximum residual disinfectant level;
MRDLG - maximum residual disinfectant level goal;
MTTP - maximum total trihalomethane potential;
NSF - NSF International (formerly known as the National Sanitation Foundation (NSF));
NTNC - nontransient **noncommunity;**
NTU - nephelometric turbidity unit;
ONORM - Osterreichisches Normungsinstitut;
PAA - project approval application;
pCi/L - picocuries per liter;
PHD - peak hourly demand;
ppm - parts per million (1 ppm = 1 mg/L);
psi - pounds per square inch;
PVBA - pressure vacuum breaker assembly;
RPBA - reduced pressure backflow assembly;
RPDA - reduced pressure detector assembly;
SAL - state advisory level;
SCA - sanitary control area;
SDWA - Safe Drinking Water Act;
SEPA - State Environmental Policy Act;
SOC - synthetic organic chemical;
SMA - satellite management agency;
SPI - special purpose investigation;
SRF - state revolving fund;
SUVA - specific ultraviolet absorption;
SVBA - spill resistant vacuum breaker assembly;
SWTR - surface water treatment rule;
T - disinfectant contact time in minutes;
TTHM - total trihalomethane;
TNC - transient **noncommunity**;
TNTC - too numerous to count;
TOC - total organic carbon;
ug/L - micrograms per liter;
UL - Underwriters Laboratories, Inc.;
umhos/cm - micromhos per centimeter;
UPC - Uniform Plumbing Code;
UTC - utilities and transportation commission;
VOC - volatile organic chemical;
WAC - Washington Administrative Code;
WFI - water facilities inventory form;
WHPA - wellhead protection area; and
WUE - water use efficiency.

"Acute" means posing an immediate risk to human health.

"Alternative filtration technology" means a filtration process for substantial removal of particulates (generally > 2 log *Giardia lamblia* cysts and ≥ 2-log removal of *Cryptosporidium* oocysts) by other than conventional, direct, diatomaceous earth, or slow sand filtration processes.

"Analogous treatment system" means an existing water treatment system that has unit processes and source water quality characteristics that are similar to a proposed treatment system.

"Approved air gap" means a physical separation between the free-flowing end of a potable water supply pipeline and the overflow rim of an open or nonpressurized receiving vessel. To be an air gap approved by the department, the separation must be at least:

Twice the diameter of the supply piping measured vertically from the overflow rim of the receiving vessel, and in no case be less than one inch, when unaffected by vertical surfaces (sidewalls); and:

Three times the diameter of the supply piping, if the horizontal distance between the supply pipe and a vertical surface (sidewall) is less than or equal to three times the diameter of the supply pipe, or if the horizontal distance between the supply pipe and intersecting vertical surfaces (sidewalls) is less than or equal to four times the diameter of the supply pipe and in no case less than one and one-half inches.

"Approved atmospheric vacuum breaker (AVB)" means an AVB of make, model, and size that is approved by the department. AVBs that appear on the current approved backflow prevention assemblies list developed by the University of Southern California Foundation for Cross-Connection Control and Hydraulic Research or that are listed or approved by other nationally recognized testing agencies (such as IAPMO, ANSI, or UL) acceptable to the authority having jurisdiction are considered approved by the department.

"Approved backflow preventer" means an approved air gap, an approved backflow prevention assembly, or an approved AVB. The terms "approved backflow preventer," "approved air gap," or "approved backflow prevention assembly" refer only to those approved backflow preventers relied upon by the purveyor for the protection of the public water system. The requirements of WAC 246-290-490 do not apply to backflow preventers installed for other purposes.

"Approved backflow prevention assembly" means an RPBA, RPDA, DCVA, DCDA, PVBA, or SVBA of make, model, and size that is approved by the department. Assemblies that appear on the current approved backflow prevention assemblies list developed by the University of Southern California Foundation for Cross-Connection Control and Hydraulic Research or other entity acceptable to the department are considered approved by the department.

"As-built drawing" means the drawing created by an engineer from the collection of the original design plans, including changes made to the design or to the system, that reflects the actual constructed condition of the water system.

"Authority having jurisdiction" (formerly known as local administrative authority) means the local official, board, department, or agency authorized to administer and enforce the provisions of the Uniform Plumbing Code as adopted under chapter 19.27 RCW.

"Authorized agent" means any person who:

Makes decisions regarding the operation and management of a public water system whether or not he or she is engaged in the physical operation of the system;

Makes decisions whether to improve, expand, purchase, or sell the system; or

Has discretion over the finances of the system.

"Authorized consumption" means the volume of metered and unmetered water used for municipal water supply purposes by consumers, the purveyor, and others authorized to do so by the purveyor, including, but not limited to, fire fighting and training, flushing of mains and sewers, street cleaning, and watering of parks and landscapes. These volumes may be billed or unbilled.

"Average day demand (ADD)" means the total quantity of water use from all sources of supply as measured or estimated over a calendar year divided by three hundred sixty-five. ADD is typically expressed as gallons per day (gpd) per equivalent residential unit (ERU).

"Backflow" means the undesirable reversal of flow of water or other substances through a cross-connection into the public water system or consumer's potable water system.

"Backflow assembly tester" means a person holding a valid BAT certificate issued under chapter 246-292 WAC.

"Backpressure" means a pressure (caused by a pump, elevated tank or piping, boiler, or other means) on the consumer's side of the service connection that is greater than the pressure provided by the public water system and which may cause backflow.

"Backsiphonage" means backflow due to a reduction in system pressure in the purveyor's distribution system and/or consumer's water system.

"Bag filter" means a pressure-driven separation device that removes particulate matter larger than 1 micrometer using an engineered porous filtration media. They are typically constructed of a nonrigid, fabric filtration media housed in a pressure vessel in which the direction of flow is from the inside of the bag to outside.

"Bank filtration" means a water treatment process that uses a well to recover surface water that has naturally infiltrated into ground water through a river bed or bank(s). Infiltration is typically enhanced by the hydraulic gradient imposed by a nearby pumping water supply or other well(s).

"Best available technology" means the best technology, treatment techniques, or other means that EPA finds, after examination for efficacy under field conditions, are available, taking cost into consideration.

"Blended sample" means a sample collected from two or more individual sources at a point downstream of the confluence of the individual sources and prior to the first connection.

"C" means the residual disinfectant concentration in mg/L at a point before or at the first consumer.

"Cartridge filter" means a pressure-driven separation device that removes particulate matter larger than 1 micrometer using an engineered porous filtration media. They are typically constructed as rigid or semi-rigid, self-supporting filter elements housed in pressure vessels in which flow is from the outside of the cartridge to the inside.

"Category red operating permit" means an operating permit identified under chapter 246-294 WAC. Placement in this category results in permit issuance with conditions and a determination that the system is inadequate.

"Chemical contaminant treatment facility" means a treatment facility specifically used for the purpose of removing chemical contaminants.

"Clarification" means a treatment process that uses gravity (sedimentation) or dissolved air (flotation) to remove flocculated particles.

"Closed system" means any water system or portion of a water system in which water is transferred to a higher pressure zone closed to the atmosphere, such as when no gravity storage is present.

"Coagulant" means a chemical used in water treatment to destabilize particulates and accelerate the rate at which they aggregate into larger particles.

"Coagulation" means a process using coagulant chemicals and rapid mixing to destabilize colloidal and suspended particles and agglomerate them into flocs.

"Combination fire protection system" means a fire sprinkler system that:

Is supplied only by the purveyor's water;

Does not have a fire department pumper connection; and

Is constructed of approved potable water piping and materials that serve both the fire sprinkler system and the consumer's potable water system.

"Completely treated water" means water from a surface water source, or a ground water source under the direct influence of surface water (GWI) source that receives filtration or disinfection treatment that fully complies with the treatment technique requirements of Part 6 of this chapter as determined by the department.

"Composite sample" means a sample in which more than one source is sampled individually by the water system and then composited by a certified laboratory by mixing equal parts of water from each source (up to five different sources) and then analyzed as a single sample.

"Comprehensive monitoring plan" means a schedule that describes both the frequency and appropriate locations for sampling of drinking water contaminants as required by state and federal rules.

"Comprehensive performance evaluation (CPE)" means a thorough review and analysis of a treatment plant's performance-based capabilities and associated administrative, operation and maintenance practices. It is conducted to identify factors that may be adversely impacting a plant's capability to achieve compliance and emphasizes approaches that can be implemented without significant capital improvements. The comprehensive performance evaluation must consist of at least the following components: Assessment of plant performance; evaluation of major unit processes; identification and prioritization of performance limiting factors; assessment of the applicability of comprehensive technical assistance; and preparation of a CPE report.

"Comprehensive technical assistance (CTA)" means technical assistance intended to identify specific steps that may help a water treatment plant overcome operational or design limitations identified during a comprehensive performance evaluation.

"Confirmation" means to demonstrate the accuracy of results of a sample by analyzing another sample from the same location within a reasonable period of time, generally not to exceed two weeks. Confirmation is when analysis results fall within plus or minus thirty percent of the original sample results.

"Confluent growth" means a continuous bacterial growth covering a portion or the entire filtration area of a membrane filter in which bacterial colonies are not discrete.

"Construction completion report" means a form provided by the department and completed for each specific construction project to document:

• Project construction in accordance with this chapter and general standards of engineering practice;

• Physical capacity changes; and

• Satisfactory test results.

The completed form must be stamped with an engineer's seal, and signed and dated by a professional engineer.

"Consumer" means any person receiving water from a public water system from either the meter, or the point where the service line connects with the distribution system if no meter is present. For purposes of cross-connection control, "consumer" means the owner or operator of a water system connected to a public water system through a service connection.

"Consumer's water system," as used in WAC 246-290-490, means any potable and/or industrial water system that begins at the point of delivery from the public water system and is located on the consumer's premises. The consumer's water system includes all auxiliary sources of supply, storage, treatment, and distribution facilities, piping, plumbing, and fixtures under the control of the consumer.

"Contaminant" means a substance present in drinking water that may adversely affect the health of the consumer or the aesthetic qualities of the water.

"Contingency plan" means that portion of the wellhead protection program section of the water system plan or small water system management program that addresses the replacement of the major well(s) or wellfield in the event of loss due to ground water contamination.

"Continuous monitoring" means determining water quality with automatic recording analyzers that operate without interruption twenty-four hours per day.

"Conventional filtration treatment" means a series of processes including coagulation, flocculation, clarification, and filtration that together result in substantial particulate removal in compliance with Part 6 of this chapter.

"Cost-effective" means the benefits exceed the costs.

"Council" means the Washington state building code council under WAC 51-04-015(2).

"Critical water supply service area (CWSSA)" means a geographical area which is characterized by a proliferation of small, inadequate water systems, or by water supply problems which threaten the present or future water quality or reliability of service in a manner that efficient and orderly development may best be achieved through coordinated planning by the water utilities in the area.

"Cross-connection" means any actual or potential physical connection between a public water system or the consumer's water system and any source of nonpotable liquid, solid, or gas that could contaminate the potable water supply by backflow.

"Cross-connection control program" means the administrative and technical procedures the purveyor implements to protect the public water system from contamination via cross-connections as required in WAC 246-290-490.

"Cross-connection control specialist" means a person holding a valid CCS certificate issued under chapter 246-292 WAC.

"Cross-connection control summary report" means the annual report that describes the status of the purveyor's cross-connection control program.

"CT" or **"CTcalc"** means the product of "residual disinfectant concentration" (C) and the corresponding "disinfectant contact time" (T) i.e., "C" x "T."

"$CT_{99.9}$" means the CT value required for 99.9 percent (3 log) inactivation of *Giardia lamblia* cysts.

"CTreq" means the CT value a system shall provide to achieve a specific percent inactivation of *Giardia lamblia* cysts or other pathogenic organisms of health concern as directed by the department.

"Curtailment" means short-term, infrequent actions by a purveyor and its consumers to reduce their water use during or in anticipation of a water shortage.

"Dead storage" means the volume of stored water not available to all consumers at the minimum design pressure under WAC 246-290-230 (5) and (6).

"Demand forecast" means an estimate of future water system water supply needs assuming historically normal weather conditions and calculated using numerous parameters, including population, historic water use, local land use plans, water rates and their impacts on consumption, employment, projected water use efficiency savings from implementation of a water use efficiency program, and other appropriate factors.

"Department" means the Washington state department of health or health officer as identified in a joint plan of operation under WAC 246-290-030(1).

"Design and construction standards" means department design guidance and other peer reviewed documents generally accepted by the engineering profession as containing fundamental criteria for design and construction of water facility projects. Design and construction standards are comprised of performance and sizing criteria and reference general construction materials and methods.

"Diatomaceous earth filtration" means a filtration process for substantial removal of particulates (> 2 log *Giardia lamblia* cysts) in which:

A precoat cake of graded diatomaceous earth filter media is deposited on a support membrane (septum); and

Water is passed through the cake on the septum while additional filter media, known as body feed, is continuously added to the feed water to maintain the permeability of the filter cake.

"Direct filtration" means a series of processes including coagulation, flocculation, and filtration (but excluding sedimentation) that together result in substantial particulate removal in compliance with Part 6 of this chapter.

"Direct service connection" means a service hookup to a property that is contiguous to a water distribution main and where additional distribution mains or extensions are not needed to provide service.

"Disinfectant contact time (T in CT)" means: When measuring the first or only C, the time in minutes it takes water to move from the point of disinfectant application to a point where the C is measured; and

For subsequent measurements of C, the time in minutes it takes water to move from one C measurement point to the C measurement point for which the particular T is being calculated.

"Disinfection" means the use of chlorine or other agent or process the department approves for killing or inactivating microbiological organisms, including pathogenic and indicator organisms.

"Disinfection profile" means a summary of *Giardia lamblia* inactivation through a surface water treatment plant.

"Distribution coliform sample" means a sample of water collected from a representative location in the distribution system at or after the first service and analyzed for coliform presence in compliance with this chapter.

"Distribution-related projects" means distribution projects such as storage tanks, booster pump facilities, transmission mains, pipe linings, and tank coating. It does not mean source of supply (including interties) or water quality treatment projects.

"Distribution system" means all piping components of a public water system that serve to convey water from transmission mains linked to source, storage and treatment facilities to the consumer excluding individual services.

"Domestic or other nondistribution system plumbing problem," means contamination of a system having more than one service connection with the contamination limited to the specific service connection from which the sample was taken.

"Duplicate (verification) sample" means a second sample collected at the same time and location as the first sample and used for verification.

"Elected governing board" means the elected officers with ultimate legal responsibility for operational, technical, managerial, and financial decisions for a public water system.

"Emergency" means an unforeseen event that causes damage or disrupts normal operations and requires immediate action to protect public health and safety.

"Emergency source" means any source that is approved by the department for emergency purposes only, is not used for routine or seasonal water demands, is physically disconnected, and is identified in the purveyor's emergency response plan.

"Engineering design review report" means a form provided by the department and completed for a specific distribution-related project to document:

• Engineering review of a project report and/or construction documents under the submittal exception process in WAC 246-290-125(3); and

• Design in accordance with this chapter and general standards of engineering practice.

The completed form must be stamped with engineer's seal, and signed and dated by a professional engineer.

"Equalizing storage" means the volume of storage needed to supplement supply to consumers when the peak hourly demand exceeds the total source pumping capacity.

"Equivalent residential unit (ERU)" means a system-specific unit of measure used to express the amount of water consumed by a typical full-time single family residence.

"Existing service area" means a specific area within which direct service or retail service connections to customers of a public water system are currently available.

"Expanding public water system" means a public water system installing additions, extensions, changes, or alterations to their existing source, transmission, storage, or distribution facilities that will enable the system to increase in size its existing service area and/or its number of approved service connections. Exceptions:

A system that connects new approved individual retail or direct service connections onto an existing distribution system within an existing service area; or

A distribution system extension in an existing service area identified in a current and approved water system plan or project report.

"Filter profile" means a graphical representation of individual filter performance in a direct or conventional surface water filtration plant, based on continuous turbidity measurements or total particle counts versus time for an entire filter run, from startup to backwash inclusively, that includes an assessment of filter performance while another filter is being backwashed.

"Filtration" means a process for removal of particulate matter from water by passage through porous media.

"Financial viability" means the capability of a water system to obtain sufficient funds to construct, operate, maintain, and manage a public water system, on a continuing basis, in full compliance with federal, state, and local requirements.

"Finished water" means water introduced into a public water system's distribution system and is intended for distribution and consumption without further treatment, except as treatment necessary to maintain water quality in the distribution system (e.g., booster disinfection, addition of corrosion control chemicals).

"Finished water storage facility" means a water storage structure that is integrated with a water system's distribution network to provide for variable system demands including, but not limited to, daily equalizing storage, standby storage, or fire reserves, or to provide for disinfectant contact time.

"Fire flow" means the maximum rate and duration of water flow needed to suppress a fire under WAC 246-293-640 or as required under local fire protection authority standards.

"Fire suppression storage" means the volume of stored water available during fire suppression activities to satisfy minimum pressure requirements per WAC 246-290-230.

"First consumer" means the first service connection associated with any source (i.e., the point where water is first withdrawn for human consumption, excluding connections where water is delivered to another water system covered by these regulations).

"Flocculation" means a process enhancing agglomeration and collection of colloidal and suspended particles into larger, more easily settleable or filterable particles by gentle stirring.

"Flowing stream" means a course of running water flowing in a definite channel.

"Flow-through fire protection system" means a fire sprinkler system that:

Is supplied only by the purveyor's water;

Does not have a fire department pumper connection;

Is constructed of approved potable water piping and materials to which sprinkler heads are attached; and

Terminates at a connection to a toilet or other plumbing fixture to prevent stagnant water.

"Forecasted demand characteristics" means the factors that may affect a public water system's projected water needs.

"Future service area" means a specific area a public water system plans to provide water service. This is determined by a written agreement between purveyors under WAC 246-293-250 or by the purveyor's elected governing board or governing body if not required under WAC 246-293-250.

"Governing body" means the individual or group of individuals with ultimate legal responsibility for operational, technical, managerial, and financial decisions for a public water system.

"Grab sample" means a water quality sample collected at a specific instant in time and analyzed as an individual sample.

"Ground water under the direct influence of surface water (GWI)" means any water beneath the surface of the ground that the department determines has the following characteristics:

Significant occurrence of insects or other macroorganisms, algae, or large-diameter pathogens such as *Giardia lamblia* or, *Cryptosporidium*; or

Significant and relatively rapid shifts in water characteristics such as turbidity, temperature, conductivity, or pH closely correlating to climatological or surface water conditions where natural conditions cannot prevent the introduction of surface water pathogens into the source at the system's point of withdrawal.

"Guideline" means a department document assisting the purveyor in meeting a rule requirement.

"Health officer" means the health officer of the city, county, city-county health department or district, or an authorized representative.

"Heterotrophic Plate Count (HPC)" means a procedure to measure a class of bacteria that use organic nutrients for growth. The density of these bacteria in drinking water is measured as colony forming units per milliliter and is referred to as the HPC.

"High health cross-connection hazard" means a cross-connection involving any substance that could impair the quality of potable water and create an actual public health hazard through injury, poisoning, or spread of disease.

"Human consumption" means the use of water for drinking, bathing or showering, hand washing, food preparation, cooking, or oral hygiene.

"Hydraulic analysis" means the study of a water system's distribution main and storage network to determine present or future adequacy for provision of service to consumers within the established design parameters for the system under peak flow conditions, including fire flow. The analysis is used to establish any need for improvements to existing systems or to substantiate adequacy of design for distribution system components such as piping, elevated storage, booster stations or similar facilities used to pump and convey water to consumers.

"Inactivation" means a process which renders pathogenic microorganisms incapable of producing disease.

"Inactivation ratio" means the ratio obtained by dividing CTcalc by CTreq.

"Incompletely treated water" means water from a surface or GWI source that receives filtration and/or disinfection treatment that does not fully comply with the treatment technique requirements of Part 6 of this chapter as determined by the department.

"In-line filtration" means a series of processes, including coagulation and filtration (but excluding flocculation and sedimentation) that together result in particulate removal.

"In-premises protection" means a method of protecting the health of consumers served by the consumer's potable water system, located within the property lines of the consumer's premises by the installation of an approved air gap or backflow prevention assembly at the point of hazard, which is generally a plumbing fixture.

"Intertie" means an interconnection between public water systems permitting the exchange or delivery of water between those systems.

"Lake or reservoir" means a natural or man-made basin or hollow on the earth's surface in which water collects or is stored that may or may not have a current or single direction of flow.

"Legionella" means a genus of bacteria containing species which cause a type of pneumonia called Legionnaires' Disease.

"Limited alternative to filtration" means a process that ensures greater removal and/or inactivation efficiencies of pathogenic organisms than would be achieved by the combination of filtration and chlorine disinfection.

"Local plans and regulations" means any comprehensive plan or development regulation adopted under chapter 36.70A RCW or any other applicable comprehensive plan, land use plan, or development regulation adopted by a city, town, or county for the applicable service area.

"Low cross-connection hazard" means a cross-connection that could impair the quality of potable water to a degree that does not create a hazard to the public health, but does adversely and unreasonably affect the aesthetic qualities of potable waters for domestic use.

"Major project" means all construction projects subject to the State Environmental Policy Act (SEPA) under WAC 246-03-030 (3)(a) and include all surface water source development, all water system storage facilities greater than one-half million gallons, new transmission lines longer than one thousand feet and larger than eight inches in diameter located in new rights of way and major extensions to existing water distribution systems involving use of pipes greater than eight inches in diameter, that are designed to increase the existing service area by more than one square mile.

"Mandatory curtailment" means curtailment required by a public water system of specified water uses and consumer classes for a specified period of time.

"Marginal costs" means the costs incurred by producing the next increment of supply.

"Maximum contaminant level (MCL)" means the maximum permissible level of a contaminant in water the purveyor delivers to any public water system user, measured at the locations identified under WAC 246-290-300, Table 3.

"Maximum contaminant level violation" means a confirmed measurement above the MCL and for a duration of time, where applicable, as outlined under WAC 246-290-310.

"Maximum day demand (MDD)" means the highest actual or estimated quantity of water that is, or is expected to be, used over a twenty-four hour period, excluding unusual events or emergencies. MDD is typically expressed as gallons per day per ERU (gpd/ERU).

"Membrane filtration" means a pressure or vacuum driven separation process in which particulate matter larger than 1 micrometer is rejected by an engineered barrier, primarily through a size-exclusion mechanism, and which has a measurable removal efficiency of a target organism that can be verified through the application of a direct integrity test. This definition includes the common membrane technologies of microfiltration, ultrafiltration, nanofiltration, and reverse osmosis.

"Monitoring waiver" means an action taken by the department under WAC 246-290-300 (4)(g) or (8)(f) to allow a water system to reduce specific monitoring requirements based on a determination of low source vulnerability to contamination.

"Municipal water supplier" means an entity that supplies water for municipal water supply purposes.

"Municipal water supply purposes" means a beneficial use of water:

(a) For residential purposes through fifteen or more residential service connections or for providing residential use of water for a nonresidential population that is, on average, at least twenty-five people for at least sixty days a year;

(b) For governmental or governmental proprietary purposes by a city, town, public utility, district, county, sewer district, or water district; or

(c) Indirectly for the purposes in (a) or (b) of this definition through the delivery of treated or raw water to a public water system for such use.

(i) If water is beneficially used under a water right for the purposes listed in (a), (b), or (c) of this definition, any other beneficial use of water under the right generally associated with the use of water within a municipality is also for "municipal water supply purposes," including, but not limited to, beneficial use for commercial, industrial, irrigation of parks and open spaces, institutional, landscaping, fire flow, water system maintenance and repair, or related purposes.

(ii) If a governmental entity holds a water right that is for the purposes listed in (a), (b), or (c) of this definition, its use of water or its delivery of water for any other beneficial use generally associated with the use of water within a municipality is also for "municipal water supply purposes," including, but not limited to, beneficial use for commercial, industrial, irrigation of parks and open spaces, institutional, landscaping, fire flow, water system maintenance and repair, or related purposes.

"Nested storage" means one component of storage is contained within the component of another.

"Nonacute" means posing a possible or less than immediate risk to human health.

"Nonresident" means a person having access to drinking water from a public water system, but who lives elsewhere. Examples include travelers, transients, employees, students, etc.

"Normal operating conditions" means those conditions associated with the designed, day-to-day provision of potable drinking water that meets regulatory water quality standards and the routine service expectations of the system's consumers at all times, including meeting fire flow demands. Operation under conditions such as power outages, floods, or unscheduled transmission or distribution disruptions, even if considered in the system design, are considered abnormal.

"Operational storage" means the volume of distribution storage associated with source or booster pump normal cycling times under normal operating conditions and is additive to the equalizing and standby storage components, and to fire flow storage if this storage component exists for any given tank.

"Peak hourly demand (PHD)" means the maximum rate of water use, excluding fire flow, that can be expected to occur within a defined service area over a continuous sixty minute time period. PHD is typically expressed in gallons per minute (gpm).

"Peak hourly flow" means, for the purpose of CT calculations, the greatest volume of water passing through the system during any one hour in a day.

"Performance criteria" means the level at which a system shall operate in order to maintain system reliability compliance, in accordance with WAC 246-290-420, and to meet consumers' reasonable expectations.

"Permanent residence" means any dwelling that is, or could reasonably be expected to be, occupied on a continuous basis.

"Permanent source" means a public water system supply source that is used regularly each year, and based on expected operational requirements of the system, will be used more than three consecutive months in any twelve-month period. For seasonal water systems that are in operation for less than three consecutive months per year, their sources shall also be considered to be permanent.

"Plant intake" means the works or structures at the head of a conduit through which water is diverted from a source (e.g., river or lake) into the treatment plant.

"Point of disinfectant application" means the point where the disinfectant is added, and where water downstream of that point is not subject to contamination by untreated surface water.

"Population served" means the number of persons, resident and nonresident, having immediate access to drinking water from a public water system, whether or not persons have actually consumed water from that system. The number of nonresidents shall be the average number of persons having immediate access to drinking water on days access was provided during that month. In the absence of specific population data, the number of residents shall be computed by multiplying the number of active services by two and one-half.

"Potable" means water suitable for drinking by the public.

"Potential GWI" means a source identified by the department as possibly under the influence of surface water, and includes, but is not limited to, all wells with a screened interval fifty feet or less from the ground surface at the well-

head and located within two hundred feet of a surface water, and all Ranney wells, infiltration galleries, and springs.

"Premises isolation" means a method of protecting a public water system by installation of approved air gaps or approved backflow prevention assemblies at or near the service connection or alternative location acceptable to the purveyor to isolate the consumer's water system from the purveyor's distribution system.

"Presedimentation" means a preliminary treatment process used to remove gravel, sand, and other particulate material from the source water through settling before the water enters the primary clarification and filtration processes in a treatment plant.

"Pressure filter" means an enclosed vessel containing properly sized and graded granular media through which water is forced under greater than atmospheric pressure.

"Primary disinfection" means a treatment process for achieving inactivation of *Giardia lamblia* cysts, viruses, or other pathogenic organisms of public health concern to comply with the treatment technique requirements of Part 6 of this chapter.

"Primary standards" means standards based on chronic, nonacute, or acute human health effects.

"Primary turbidity standard" means an accurately prepared formazin solution or commercially prepared polymer solution of known turbidity (prepared in accordance with "standard methods") that is used to calibrate bench model and continuous turbidimeters (instruments used to measure turbidity).

"Project approval application (PAA)" means a department form documenting ownership of water system, design engineer for the project, and type of project.

"Protected ground water source" means a ground water source the purveyor shows to the department's satisfaction as protected from potential sources of contamination on the basis of hydrogeologic data and/or satisfactory water quality history.

"Public forum" means a meeting open to the general public that allows for their participation.

"Public water system" is defined and referenced under WAC 246-290-020.

"Purchased source" means water a purveyor purchases from a public water system not under the control of the purveyor for distribution to the purveyor's consumers.

"Purveyor" means an agency, subdivision of the state, municipal corporation, firm, company, mutual or cooperative association, institution, partnership, or person or other entity owning or operating a public water system. Purveyor also means the authorized agents of these entities.

"Reclaimed water" means effluent derived in any part from sewage from a wastewater treatment system that has been adequately and reliably treated, so that as a result of that treatment, it is suitable for beneficial use or a controlled use that would not otherwise occur, and it is no longer considered wastewater.

"Record drawings" means the drawings bearing the seal and signature of a professional engineer that reflect the modifications made to construction documents, documenting actual constructed conditions of the water system facilities.

"Recreational tract" means an area that is clearly defined for each occupant, but has no permanent structures with internal plumbing, and the area has been declared in the covenants or on the recorded plat in order to be eligible for reduced design considerations.

"Regional public water supplier" means a water system that provides drinking water to one, or more, other public water systems.

"Regularly" means four hours or more per day for four days or more per week.

"Removal credit" means the level (expressed as a percent or log) of *Giardia* and virus removal the department grants a system's filtration process.

"Repeat sample" means a sample collected to confirm the results of a previous analysis.

"Resident" means an individual living in a dwelling unit served by a public water system.

"Residual disinfectant concentration" means the analytical level of a disinfectant, measured in milligrams per liter, that remains in water following the application (dosing) of the disinfectant after some period of contact time.

"Retail service area" means the specific area defined by the municipal water supplier where the municipal water supplier has a duty to provide service to all new service connections. This area must include the municipal water supplier's existing service area and may also include areas where future water service is planned if the requirements of RCW 43.20.260 are met.

"Same farm" means a parcel of land or series of parcels that are connected by covenants and devoted to the production of livestock or agricultural commodities for commercial purposes and does not qualify as a **Group A** public water system.

"Sanitary survey" means a review, inspection, and assessment of a public water system by the department or department designee including, but not limited to: Source, facilities, equipment, administration and operation, maintenance procedures, monitoring, recordkeeping, planning documents and schedules, and management practices. The purpose of the survey is to evaluate the adequacy of the water system for producing and distributing safe and adequate drinking water.

"Satellite management agency (SMA)" means a person or entity that is approved by the department to own or operate public water systems on a regional or county-wide basis without the necessity for a physical connection between the systems.

"Seasonal source" means a public water system source used on a regular basis, that is not a permanent or emergency source.

"Secondary standards" means standards based on factors other than health effects.

"Service area" means the specific area or areas a water system currently serves or plans to provide water service. This may be comprised of the existing service area, retail service area, future service area, and include areas where water is provided to other public water systems.

"Service connection" means a connection to a public water system designed to provide potable water to a single family residence, or other residential or nonresidential population. When the connection provides water to a residential population without clearly defined single family residences, the following formulas shall be used in determining the num-

ber of services to be included as residential connections on the WFI form:

Divide the average population served each day by two and one-half; or

Using actual water use data, calculate the total ERUs represented by the service connection in accordance with department design guidance.

In no case shall the calculated number of services be less than one.

"Severe health cross-connection hazard" means a cross-connection which could impair the quality of potable water and create an immediate, severe public health hazard through poisoning or spread of disease by contaminants from radioactive material processing plants, nuclear reactors, or wastewater treatment plants.

"Significant noncomplier" means a system that is violating or has violated department rules, and the violations may create, or have created an imminent or a significant risk to human health. The violations include, but are not limited to, repeated violations of monitoring requirements, failure to address an exceedance of permissible levels of regulated contaminants, or failure to comply with treatment technique standards or requirements.

"Simple disinfection" means any form of disinfection that requires minimal operational control in order to maintain the disinfection at proper functional levels, and that does not pose safety concerns that would require special care, equipment, or expertise. Examples include hypochlorination, UV-light, contactor chlorination, or any other form of disinfection practice that is safe to use and easy to routinely operate and maintain.

"Slow sand filtration" means a process involving passage of source water through a bed of sand at low velocity (generally less than 0.10 gpm/ft^2) that results in substantial particulate removal (> 2 log *Giardia lamblia* cysts) by physical and biological mechanisms.

"Societal perspective" means a point of view that includes a broad spectrum of public benefits, including, but not limited to, enhanced system reliability; savings that result from delaying, deferring, or minimizing capital costs; and environmental benefits such as increased water in streams, improvements in aquifer recharge and other environmental factors.

"Source meter" means a meter that measures total output of a water source over specific time periods.

"Source water" means untreated water that is not subject to recontamination by surface runoff and:

For unfiltered systems, enters the system immediately before the first point of disinfectant application; and

For filtered systems, enters immediately before the first treatment unit of a water treatment facility.

"Special purpose investigation (SPI)" means on-site inspection of a public water system by the department or designee to address a potential public health concern, regulatory violation, or consumer complaint.

"Special purpose sample" means a sample collected for reasons other than the monitoring compliance specified in this chapter.

"Spring" means a source of water where an aquifer comes in contact with the ground surface.

"Standard methods" means the book, titled *Standard Methods for the Examination of Water and Waste Water*, jointly published by the American Public Health Association, American Water Works Association (AWWA), and Water Pollution Control Federation. This book is available through public libraries or may be ordered from AWWA, 6666 West Quincy Avenue, Denver, Colorado 80235. The edition to be used is that specified by EPA for the relevant drinking water parameter in 40 CFR Part 141.

"Standby storage" means the volume of stored water available for use during a loss of source capacity, power, or similar short-term emergency.

"State advisory level (SAL)" means a level established by the department and state board of health for a contaminant without an existing MCL. The SAL represents a level that when exceeded, indicates the need for further assessment to determine if the chemical is an actual or potential threat to human health.

"State board of health" and **"board"** means the board created by RCW 43.20.030.

"State building code" means the codes adopted by and referenced in chapter 19.27 RCW; the state energy code; and any other codes so designated by the Washington state legislature as adopted and amended by the council.

"State revolving fund (SRF)" means the revolving loan program financed by the state and federal governments and managed by the state for the purpose of assisting water systems to meet their capital needs associated with complying with the federal Safe Drinking Water Act under chapter 246-296 WAC.

"Subpart H System" see definition for **"surface water system."**

"Surface water" means a body of water open to the atmosphere and subject to surface runoff.

"Surface water system" means a public water system that uses in whole, or in part, source water from a surface supply, or GWI supply. This includes systems that operate surface water treatment facilities, and systems that purchase "completely treated water" (as defined in this subsection). A "surface water system" is also referred to as a "Subpart H System" in some federal regulatory language adopted by reference and the two terms are considered equivalent for the purposes of this chapter.

"Susceptibility assessment" means the completed Susceptibility Assessment Survey Form developed by the department to evaluate the hydrologic setting of the water source and assess its contribution to the source's overall susceptibility to contamination from surface activities.

"Synthetic organic chemical (SOC)" means a manufactured carbon-based chemical.

"System capacity" means the system's operational, technical, managerial, and financial capability to achieve and maintain compliance with all relevant local, state, and federal plans and regulations.

"System physical capacity" means the maximum number of service connections or equivalent residential units (ERUs) that the system can serve when considering the limitation of each system component such as source, treatment, storage, transmission, or distribution, individually and in combination with each other.

"Time-of-travel" means the time required for ground water to move through the water bearing zone from a specific point to a well.

"Too numerous to count (TNTC)" means the total number of bacterial colonies exceeds 200 on a 47-mm diameter membrane filter used for coliform detection.

"Tracer study" means a field study conducted to determine the disinfectant contact time, T, provided by a water system component, such as a clearwell or storage reservoir, used for *Giardia lamblia* cyst and virus inactivation. The study involves introducing a tracer chemical at the inlet of the contact basin and measuring the resulting outlet tracer concentration as a function of time.

"Transmission line" means pipes used to convey water from source, storage, or treatment facilities to points of distribution or distribution mains, and from source facilities to treatment or storage facilities. This also can include transmission mains connecting one section of distribution system to another section of distribution system as long as this transmission main is clearly defined on the plans and no service connections are allowed along the transmission main.

"Treatment technique requirement" means a department-established requirement for a public water system to provide treatment, such as filtration or disinfection, as defined by specific design, operating, and monitoring requirements. A "treatment technique requirement" is established in lieu of a primary MCL when monitoring for the contaminant is not economically or technologically feasible.

"Trihalomethane (THM)" means one of a family of organic compounds, named as derivatives of methane, where three of the four hydrogen atoms in methane are each substituted by a halogen atom in the molecular structure. THMs may occur when chlorine, a halogen, is added to water containing organic material and are generally found in water samples as disinfection by-products.

"Turbidity event" means a single day or series of consecutive days, not to exceed fourteen, when one or more turbidity measurement each day exceeds 5 NTU.

"Two-stage lime softening" means a process in which chemical addition and hardness precipitation occur in each of two distinct unit clarification processes in series prior to filtration.

"T10" means the time it takes ten percent of the water passing through a system contact tank intended for use in the inactivation of *Giardia lamblia* cysts, viruses, and other microorganisms of public health concern, as determined from a tracer study conducted at peak hourly flow or from published engineering reports or guidance documents for similarly configured tanks.

"Unapproved auxiliary water supply" means a water supply (other than the purveyor's water supply) on or available to the consumer's premises that is either not approved for human consumption by the health agency having jurisdiction or is not otherwise acceptable to the purveyor.

"Uncovered finished water storage facility" means a tank, reservoir, or other facility used to store water, which will undergo no further treatment to reduce microbial pathogens except residual disinfection and is directly open to the atmosphere without a suitable water-tight roof or cover.

"Uniform Plumbing Code" means the code adopted under RCW 19.27.031(4) and implemented under chapter 51-56 WAC. This code establishes statewide minimum plumbing standards applicable within the property lines of the consumer's premises.

"Used water" means water which has left the control of the purveyor.

"Verification" means to demonstrate the results of a sample to be precise by analyzing a duplicate sample. Verification occurs when analysis results fall within plus or minus thirty percent of the original sample.

"Virus" means a virus of fecal origin which is infectious to humans and transmitted through water.

"Volatile organic chemical (VOC)" means a manufactured carbon-based chemical that vaporizes quickly at standard pressure and temperature.

"Voluntary curtailment" means a curtailment of water use requested, but not required of consumers.

"Waterborne disease outbreak" means the significant occurrence of acute infectious illness, epidemiologically associated with drinking water from a public water system, as determined by the appropriate local health agency or the department.

"Water demand efficiency" means minimizing water use by the public water system's consumers through purveyor sponsored activities that may include, but are not limited to distributing water saving devices, providing rebates or incentives to promote water efficient technologies or by providing water audits to homes, businesses, or landscapes.

"Water facilities inventory (WFI) form" means the department form summarizing each public water system's characteristics.

"Water right" means a permit, claim, or other authorization, on record with or accepted by the department of ecology, authorizing the beneficial use of water in accordance with all applicable state laws.

"Water right self-assessment" means an evaluation of the legal ability of a water system to use water for existing or proposed usages in conformance with state water right laws. The assessment may be done by a water system, a purveyor, the department of ecology, or any combination thereof.

"Watershed" means the region or area that:

Ultimately drains into a surface water source diverted for drinking water supply; and

Affects the physical, chemical, microbiological, and radiological quality of the source.

"Water shortage" means a situation during which the water supplies of a system cannot meet normal water demands for the system, including peak periods.

"Water shortage response plan" means a plan outlining policies and activities to be implemented to reduce water use on a short-term basis during or in anticipation of a water shortage.

"Water supply characteristics" means the factors related to a public water system's source of water supply that may affect its availability and suitability to provide for both short-term and long-term needs. Factors include, but are not limited to, source location, name of any body of water and water resource inventory area from which water is diverted or withdrawn, production capacity, the source's natural variability, the system's water rights for the source, and other legal demands on the source such as water rights for other uses, conditions established to protect species listed under the

Endangered Species Act in 50 CFR 17.11; instream flow restrictions established under Title 173 WAC, and any conditions established by watershed plans approved under chapter 90.82 RCW and RCW 90.54.040(1) or salmon recovery plans under chapter 77.85 RCW.

"Water supply efficiency" means increasing a public water system's transmission, storage and delivery potential through activities that may include, but are not limited to system-wide water audits, documenting authorized uses, conducting leak surveys and repairs on meters, lines, storage facilities, and valves.

"Water use efficiency (WUE)" means increasing water supply efficiency and water demand efficiency to minimize water withdrawals and water use.

"Water use efficiency program" means policies and activities focusing on increasing water supply efficiency and water demand efficiency to minimize water withdrawals and water use.

"Well field" means a group of wells one purveyor owns or controls that:

Draw from the same aquifer or aquifers as determined by comparable inorganic chemical analysis and comparable static water level and top of the open interval elevations; and

Discharge water through a common pipe and the common pipe shall allow for collection of a single sample before the first distribution system connection.

"Wellhead protection area (WHPA)" means the portion of a well's, wellfield's or spring's zone of contribution defined using WHPA criteria established by the department.

"Zone of contribution" means the area surrounding a pumping well or spring that encompasses all areas or features that supply ground water recharge to the well or spring.

[Statutory Authority: RCW 70.119A.180 and 43.20.050. 08-03-061, § 246-290-010, filed 1/14/08, effective 2/14/08. Statutory Authority: RCW 70.119A.180. 07-02-025B, § 246-290-010, filed 12/22/06, effective 1/22/07. Statutory Authority: RCW 43.20.050 and 70.119A.080. 04-04-056, § 246-290-010, filed 1/30/04, effective 3/1/04. Statutory Authority: RCW 43.20.050 (2) and (3) and 70.119A.080. 03-08-037, § 246-290-010, filed 3/27/03, effective 4/27/03. Statutory Authority: RCW 43.02.050 [43.20.-050]. 99-07-021, § 246-290-010, filed 3/9/99, effective 4/9/99. Statutory Authority: RCW 43.20.050. 94-14-001, § 246-290-010, filed 6/22/94, effective 7/23/94; 93-08-011 (Order 352B), § 246-290-010, filed 3/25/93, effective 4/25/93; 92-04-070 (Order 241B), § 246-290-010, filed 2/4/92, effective 3/6/92. Statutory Authority: Chapter 43.20 RCW. 91-07-031 (Order 150B), § 246-290-010, filed 3/15/91, effective 4/15/91. Statutory Authority: RCW 43.20.050. 91-02-051 (Order 124B), recodified as § 246-290-010, filed 12/27/90, effective 1/31/91. Statutory Authority: P.L. 99-339. 89-21-020 (Order 336), § 248-54-015, filed 10/10/89, effective 11/10/89. Statutory Authority: RCW 34.04.045. 88-05-057 (Order 307), § 248-54-015, filed 2/17/88. Statutory Authority: RCW 43.20.050. 83-19-002 (Order 266), § 248-54-015, filed 9/8/83.]

WAC 246-290-020 Applicability. (1) Public water system shall mean any system providing water for human consumption through pipes or other constructed conveyances, excluding a system serving only one single-family residence and a system with four or fewer connections all of which serve residences on the same farm. This term includes:

(a) Collection, treatment, storage, and/or distribution facilities under control of the purveyor and used primarily in connection with the system; and

(b) Collection or pretreatment storage facilities not under control of the purveyor, but primarily used in connection with the system.

(2) The rules of this chapter shall apply to all **Group A** public water systems except those systems meeting all of the following conditions:

(a) Consists only of distribution and/or storage facilities and does not have any source or treatment facilities;

(b) Obtains all water from, but is not owned by, a public water system where the rules of this chapter apply;

(c) Does not sell water directly to any person; and

(d) Is not a passenger-conveying carrier in interstate commerce.

(3) **Group A** public water systems meeting all of the provisions under subsection (2) of this section may be required by the department to comply with such provisions of this chapter as are necessary to resolve a public health concern if the department determines a public health threat exists or is suspected.

(4) A **Group A** system shall be defined as a public water system providing service such that it meets the definition of a public water system provided in the 1996 amendments to the federal Safe Drinking Water Act (Public Law 104-182, Section 101, subsection b).

(5) **Group A** water systems are further defined as **community** and **noncommunity** water systems.

(a) **Community** water system means any **Group A** water system providing service to fifteen or more service connections used by year-round residents for one hundred eighty or more days within a calendar year, regardless of the number of people, or regularly serving at least twenty-five year-round (i.e., more than one hundred eighty days per year) residents.

Examples of a **community** water system might include a municipality, subdivision, mobile home park, apartment complex, college with dormitories, nursing home, or prison.

(b) **Noncommunity** water system means a **Group A** water system that is not a **community** water system. **Noncommunity** water systems are further defined as:

(i) **Nontransient (NTNC)** water system that provides service opportunity to twenty-five or more of the same nonresidential people for one hundred eighty or more days within a calendar year.

Examples of a **NTNC** water system might include a school, day care center, or a business, factory, motel, or restaurant with twenty-five or more employees on-site.

(ii) **Transient (TNC)** water system that serves:

(A) Twenty-five or more different people each day for sixty or more days within a calendar year;

(B) Twenty-five or more of the same people each day for sixty or more days, but less than one hundred eighty days within a calendar year; or

(C) One thousand or more people for two or more consecutive days within a calendar year.

Examples of a **TNC** water system might include a restaurant, tavern, motel, campground, state or county park, an RV park, vacation cottages, highway rest area, fairground, public concert facility, special event facility, or church.

(c) A **Group B** water system is a public water system that does not meet the definition of a **Group A** water system. (See Table 1 and chapter 246-291 WAC for further explanation of a **Group B** water system.)

(6) A **Group A** system meeting more than one of the categories described in this section shall be classified by the department in the following order:

(a) **Community** water system;
(b) **NTNC** water system; or
(c) **TNC** water system.

Table 1

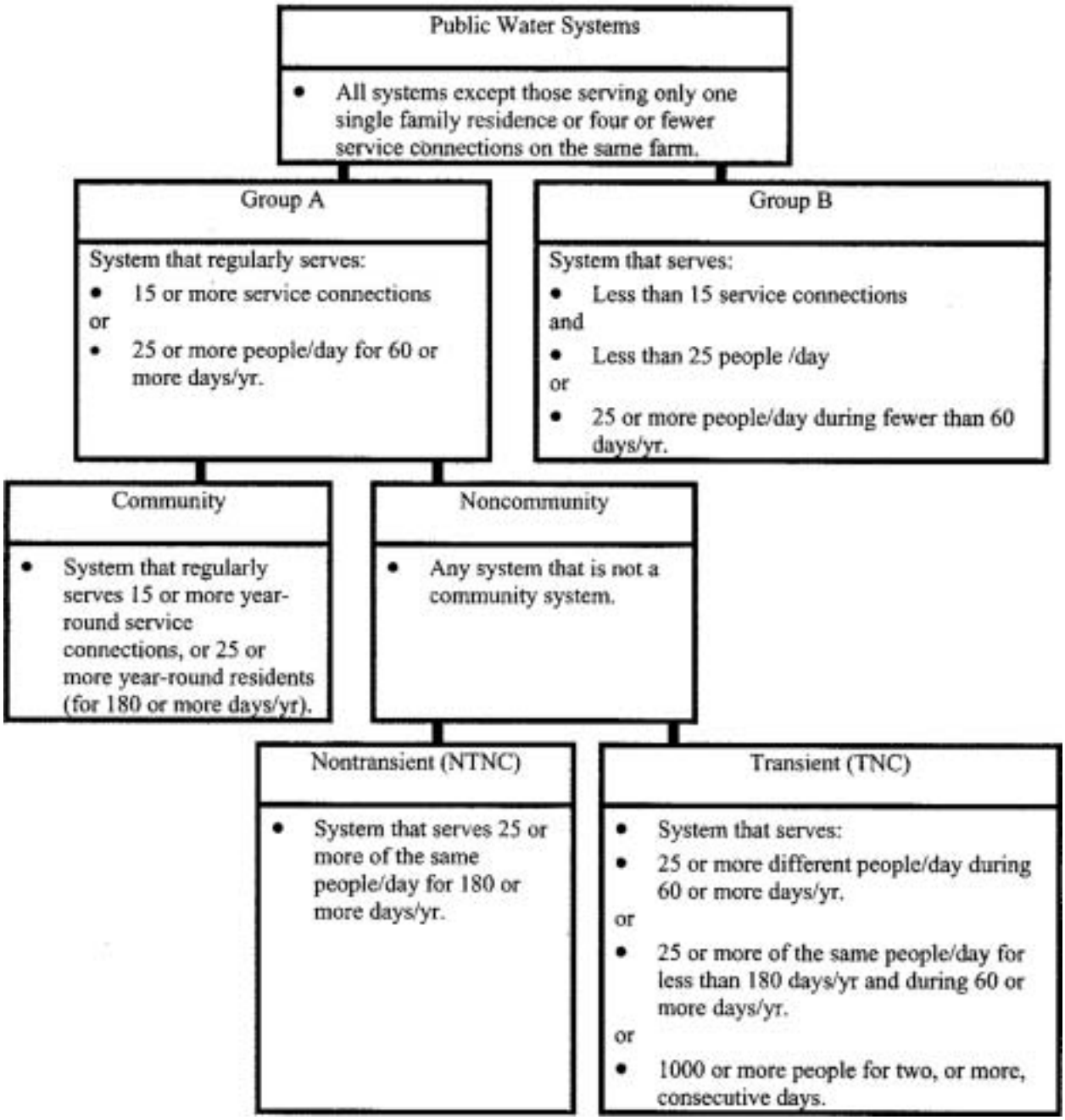

[Statutory Authority: RCW 70.119A.180 and 43.20.050. 08-03-061, § 246-290-020, filed 1/14/08, effective 2/14/08. Statutory Authority: RCW 43.02.050 [43.20.050]. 99-07-021, § 246-290-020, filed 3/9/99, effective 4/9/99. Statutory Authority: RCW 43.20.050. 94-14-001, § 246-290-020, filed 6/22/94, effective 7/23/94; 93-08-011 (Order 352B), § 246-290-020, filed 3/25/93, effective 4/25/93; 91-02-051 (Order 124B), recodified as § 246-290-020, filed 12/27/90, effective 1/31/91. Statutory Authority: P.L. 99-339. 89-21-020 (Order 336), § 248-54-006, filed 10/10/89, effective 11/10/89.]

WAC 246-290-025 Adoption by reference. The following sections and subsections of Title 40 Code of Federal Regulations (CFR) Part 141 National Primary Drinking Water Regulations revised as of July 1, 2007, and including all amendments and modifications thereto effective as of the date of adoption of this chapter are adopted by reference:

141.2 Definitions. Only those definitions listed as follows:

Action level;
Corrosion inhibitor;
Effective corrosion inhibitor residual;
Enhanced coagulation;
Enhanced softening;
Granular activated carbon (GAC10);
Haloacetic acids (five) (HAA5);
First draw sample;
Large water system;
Lead service line;
Maximum residual disinfectant level (MRDL);
Maximum residual disinfectant level goal (MRDLG);
Medium-size water system;
Optimal corrosion control treatment;
Service line sample;
Single family structure;
Small water system;
Specific ultraviolet absorption (SUVA); and
Total Organic Carbon (TOC).

141.12 Maximum contaminant levels for organic chemicals.
141.13 Maximum contaminant levels for turbidity.
141.21 Coliform monitoring.
141.22 Turbidity sampling and analytical requirements.
141.23(a) - 141.23(j), Inorganic chemical sampling. excluding (i)(2)
141.23(m) - 141.23(o)
141.24(a) - 141.24(d), Organic chemicals other than total trihalomethanes.
141.24 (f)(1) - 141.24 (f)(15),
141.24 (f)(18), 141.24 (f)(19),
141.24 (f)(21), 141.24 (f)(22)
141.24 (g)(1) - 141.24 (g)(9),
141.24 (g)(12) - 141.24 (g)(14),
141.24 (h)(1) - 141.24 (h)(11),
141.24 (h)(14) - 141.24 (h)(17)
141.24 (h)(20)
141.25(a), 141.25 (c) - (d), Analytical methods for radioactivity.
141.26 Monitoring frequency and compliance for radioactivity in community water systems.
141.31(d) Reporting of public notices and compliance certifications.
141.33(e) Record maintenance of public notices and certifications.
141.61 Maximum contaminant levels for organic contaminants.
141.62, excluding (b) Maximum contaminant levels for inorganic chemical and physical contaminants.
141.64(c) Best Available Technologies (BATs) for Disinfection By-Products.
141.65(c) Best Available Technologies (BATs) for Maximum Residual Disinfectant Levels.
141.66 Maximum contaminant levels for radionuclides.

Control of Lead and Copper

141.80 General requirements.
141.81 Applicability of corrosion control treatment steps to small, medium-size and large water systems.
141.82(a) - 141.82(h) Description of corrosion control treatment requirements.
141.83 Source water treatment requirements.
141.84 Lead service line replacement requirements.
141.85 Public education and supplemental monitoring requirements.
141.86 (a) - (f) Monitoring requirements for lead and copper in tap water.
141.87 Monitoring requirements for water quality parameters.
141.88 Monitoring requirements for lead and copper in source water.
141.89 Analytical methods for lead and copper testing.
141.90, excluding (a)(4) Reporting requirements.
141.91 Recordkeeping requirements.

Disinfectants and Disinfection By-Products (D/DBP)

141.130 General requirements.
141.131 Analytical requirements.
141.132 Monitoring requirements.
141.133 Compliance.
141.134 Reporting and recordkeeping.
141.135 Treatment technique for control of disinfection by-product precursors.

Enhanced Filtration - Reporting and Recordkeeping

141.175(b) Individual filter reporting and follow-up action requirements for systems treating surface water with conventional, direct, or in-line filtration and serving at least 10,000 people.

Subpart Q - Public Notification

141.201, excluding (3)(ii) of Table 1 General public notification requirements.
141.202, excluding (3) of Table 1 Tier 1 Public Notice - Form, manner, and frequency of notice.
141.203 Tier 2 Public Notice - Form, manner, and frequency of notice.
141.204 Tier 3 Public Notice - Form, manner, and frequency of notice.
141.205 Content of the public notice.
141.206 Notice to new billing units or new customers.
141.207 Special notice of the availability of unregulated contaminant monitoring results.
141.208 Special notice for exceedances of the SMCL for fluoride.
141.211 Special notice for *Cryptosporidium* monitoring failure.

Appendix A - NPDWR violations and situations requiring PN
Appendix B - Standard health effects language for PN

Subpart T - Enhanced Filtration and Disinfection - Systems Serving Fewer Than 10,000 People

141.530 - 141.544 Disinfection profile and benchmark.

141.563 Follow-up actions required.
141.570, Reporting requirements.
excluding (c)
Subpart W - Enhanced Treatment for *Cryptosporidium*
141.700-722 Enhanced Treatment for *Cryptosporidium*
Part 143 - National Secondary Drinking Water Regulations
143.1 Purpose.
143.2 Definitions.
143.3 Secondary maximum contaminant levels.
143.4 Monitoring.

Copies of the incorporated sections and subsections of Title 40 CFR are available from the Department of Health, P.O. Box 47822, Olympia, Washington 98504-7822, or by calling the department's drinking water hotline at 800-521-0323.

[Statutory Authority: RCW 70.119A.180 and 43.20.050. 08-03-061, § 246-290-025, filed 1/14/08, effective 2/14/08. Statutory Authority: RCW 43.20.-050 and 70.119A.080. 04-04-056, § 246-290-025, filed 1/30/04, effective 3/1/04. Statutory Authority: RCW 43.20.050 (2) and (3) and RCW 70.119A.080. 03-08-037, § 246-290-025, filed 3/27/03, effective 4/27/03. Statutory Authority: RCW 43.02.050 [43.20.050]. 99-07-021, § 246-290-025, filed 3/9/99, effective 4/9/99. Statutory Authority: RCW 43.20.050. 94-14-001, § 246-290-025, filed 6/22/94, effective 7/23/94.]

WAC 246-290-030 General administration. (1) The department and the health officer for each local health jurisdiction may develop a joint plan of operation. This plan shall:

(a) List the roles and responsibilities of each agency;

(b) Specifically designate those **Group A** systems for which the department and local health officer have primary responsibility;

(c) Provide for an agreed-to level of public water system oversight;

(d) Be signed by the department and the local health department or district; and

(e) Be reviewed at least once every five years and updated as needed.

Wherever in this chapter the term "department" is used, the term "health officer" may be substituted based on the terms of this plan of operation.

(2) The department shall, upon request, review and report on the adequacy of water supply supervision to both the state and local boards of health.

(3) The local board of health may adopt rules governing **Group A** water systems within its jurisdiction for which the health officer has assumed primary responsibility. Adopted local board of health rules shall be:

(a) No less stringent than this chapter; and

(b) Revised, if necessary, within twelve months after the effective date of revised state board of health rules. During this time period, existing local rules shall remain in effect, except provisions of the revised state board of health rules that are more stringent than the local board of health rules shall apply.

(4) For those **Group A** water systems where the health officer has assumed primary responsibility, the health officer may approve project reports and construction documents in accordance with engineering criteria approved by the department and listed under Part 3 of this chapter and water system plans in accordance with planning criteria listed under WAC 246-290-100.

(5) An advisory committee shall be established to provide advice to the department on the organization, functions, service delivery methods, and funding of the drinking water program. Members shall be appointed by the department for fixed terms of no less than two years, and may be reappointed. The committee shall reflect a broad range of interests in the regulation of public water supplies, including water utilities of all sizes, local governments, business groups, special purpose districts, local health jurisdictions, other state and federal agencies, financial institutions, environmental organizations, the legislature, professional engineers engaged in water system design, and other groups substantially affected by the department's role in implementing state and federal requirements for public water systems.

(6) The department may develop guidance to clarify sections of the rules as needed and make these available for distribution. Copies of the guidance may be obtained by contacting the division of drinking water.

(7) Fees may be charged and collected by the department as authorized in chapter 43.20B RCW and by local health agencies as authorized in RCW 70.05.060 to recover all or a portion of the costs incurred in administering this chapter or that are required to be paid under WAC 246-290-990.

(8) All state and local agencies involved in review, approval, surveillance, testing, and/or operation of public water systems, or issuance of permits for buildings or sewage systems shall be governed by these rules and any decisions of the department.

[Statutory Authority: RCW 43.02.050 [43.20.050]. 99-07-021, § 246-290-030, filed 3/9/99, effective 4/9/99. Statutory Authority: RCW 43.20.050. 94-14-001, § 246-290-030, filed 6/22/94, effective 7/23/94; 93-08-011 (Order 352B), § 246-290-030, filed 3/25/93, effective 4/25/93; 91-02-051 (Order 124B), recodified as § 246-290-030, filed 12/27/90, effective 1/31/91. Statutory Authority: P.L. 99-339. 89-21-020 (Order 336), § 248-54-025, filed 10/10/89, effective 11/10/89. Statutory Authority: RCW 34.04.045. 88-05-057 (Order 307), § 248-54-025, filed 2/17/88. Statutory Authority: RCW 43.20.050. 83-19-002 (Order 266), § 248-54-025, filed 9/8/83.]

WAC 246-290-035 Water system ownership. (1) The following requirements apply to all newly developed public water systems:

(a) Except for systems proposed within an individual water system's approved service area in a critical water supply service area as governed by the Public Water System Coordination Act, chapter 70.116 RCW and chapter 246-293 WAC, and offered service by that existing system, any proposed new public water system must be owned or operated by a department approved satellite management agency (SMA) if one is available;

(b) The approval of any proposed new public water system shall be conditioned upon the periodic review of the system's operational history to determine its ability to meet the department's financial viability and other operating requirements. If, upon periodic review, the department determines the system is in violation of financial viability or other operating requirements, the system shall transfer ownership to an approved SMA or obtain operation and management by an approved SMA, if such ownership or operation and management can be made with reasonable economy and efficiency.

(2) An owner of a public water system who is proposing to transfer or has transferred ownership shall:

(a) Provide written notice to the department and all consumers at least one year prior to the transfer, unless the new owner agrees to an earlier date. Notification shall include a time schedule for transferring responsibilities, identification of the new owner, and under what authority the new ownership will operate. If the system is a corporation, identification of the registered agent shall also be provided;

(b) Ensure all health-related standards pursuant to this chapter are met during transfer of the utility. It shall also be the responsibility of the utility transferring ownership to inform and train the new owner regarding operation of the utility; and

(c) Comply with the operating permit requirements pursuant to chapter 246-294 WAC.

(3) The purveyor may be required to document compliance with other relevant ownership requirements, such as those pursuant to UTC jurisdiction under Title 80 RCW.

(4) No purveyor may end utility operations without providing written notice to all customers and to the department at least one year prior to termination of service. A purveyor that fails to provide such notice remains subject to the provisions of this chapter.

[Statutory Authority: RCW 43.02.050 [43.20.050]. 99-07-021, § 246-290-035, filed 3/9/99, effective 4/9/99.]

WAC 246-290-040 Engineering requirements. (1) Purveyors shall ensure that all work required to be prepared under the direction of a professional engineer, including, but not limited to, water system plans, project reports, corrosion control recommendation reports, tracer studies, construction documents and construction completion reports, and engineering design review reports for distribution-related submittal exceptions, is prepared under the direction, and bears the seal, date, and signature of a professional engineer:

(a) Licensed in the state of Washington under chapter 18.43 RCW; and

(b) Having specific expertise regarding design, operation, and maintenance of public water systems.

(2) Exceptions to this requirement are projects identified under WAC 246-290-125 (1)(a) through (d).

[Statutory Authority: RCW 43.02.050 [43.20.050]. 99-07-021, § 246-290-040, filed 3/9/99, effective 4/9/99. Statutory Authority: RCW 43.20.050. 94-14-001, § 246-290-040, filed 6/22/94, effective 7/23/94; 93-08-011 (Order 352B), § 246-290-040, filed 3/25/93, effective 4/25/93; 91-02-051 (Order 124B), recodified as § 246-290-040, filed 12/27/90, effective 1/31/91. Statutory Authority: P.L. 99-339. 89-21-020 (Order 336), § 248-54-035, filed 10/10/89, effective 11/10/89. Statutory Authority: RCW 34.04.045. 88-05-057 (Order 307), § 248-54-035, filed 2/17/88. Statutory Authority: RCW 43.20.050. 83-19-002 (Order 266), § 248-54-035, filed 9/8/83.]

WAC 246-290-050 Enforcement. When any purveyor is out of compliance with a law or rule regulating public water systems and administered by the department, the department may initiate appropriate enforcement actions, regardless of any prior approvals issued. These actions may include, but are not limited to, any one or combination of the following:

(1) Notice of violation instructing or requiring appropriate corrective measures;

(2) Compliance schedule for specific actions necessary to achieve compliance status;

(3) Departmental order requiring submission of project reports, construction documents, and construction report forms;

(4) Departmental order requiring specific actions or ceasing unacceptable activities within a designated time period;

(5) Departmental order to stop work and/or refrain from using any public water system or improvements thereto until all written approvals required by statute or rule are obtained;

(6) Imposition of civil penalties may be issued for up to five thousand dollars per day per violation, or, in the case of a violation that has been determined to be a public health emergency, a penalty of not more than ten thousand dollars per day per violation under authority of chapter 70.119A RCW;

(7) Imposition of civil penalties may be issued to a person who constructs, modifies, or expands a public water system or who commences the construction, modification, or expansion of a public water system without first obtaining the required department approval. The amount of the penalty may be up to five thousand dollars per service connection, or, in the case of a system serving a transient population, a penalty of not more than four hundred dollars per person based on the highest average daily population the system serves or is anticipated to serve. The total penalty that may be imposed pursuant to this subsection and RCW 70.119A.040 (1)(b) is five hundred thousand dollars;

(8) Action that requires the purveyor to take preventive or corrective steps when results of a sanitary survey or special purpose investigation conducted by, or on behalf of, the department indicate conditions that are currently or may become a detriment to system operation;

(9) Legal action may be taken by the attorney general or local prosecutor. The legal action may be criminal or civil.

[Statutory Authority: RCW 43.02.050 [43.20.050]. 99-07-021, § 246-290-050, filed 3/9/99, effective 4/9/99. Statutory Authority: RCW 43.20.050. 93-08-011 (Order 352B), § 246-290-050, filed 3/25/93, effective 4/25/93; 91-02-051 (Order 124B), recodified as § 246-290-050, filed 12/27/90, effective 1/31/91. Statutory Authority: P.L. 99-339. 89-21-020 (Order 336), § 248-54-045, filed 10/10/89, effective 11/10/89. Statutory Authority: RCW 34.04.045. 88-05-057 (Order 307), § 248-54-045, filed 2/17/88. Statutory Authority: RCW 43.20.050. 83-19-002 (Order 266), § 248-54-045, filed 9/8/83.]

WAC 246-290-060 Variances, exemptions, and waivers. (1) General.

(a) The state board of health may grant variances, exemptions, and waivers of the requirements of this chapter according to the procedures outlined in subsection (5) of this section. See WAC 246-290-300 (4)(g) and (8)(f) for monitoring waivers.

(b) Consideration by the board of requests for variances, exemptions, and waivers shall not be considered adjudicative proceedings as that term is defined in chapter 34.05 RCW.

(c) Statements and written material regarding the request may be presented to the board at or before the public hearing where the application will be considered. Allowing cross-examination of witnesses shall be within the discretion of the board.

(d) The board may grant a variance, exemption, or waiver if it finds:

(i) Due to compelling factors, the public water system is unable to comply with the requirements; and

(ii) The granting of the variance, exemption, or waiver will not result in an unreasonable risk to the health of consumers.

(2) Variances.

(a) MCL.

(i) The board may grant a MCL variance to a public water system that cannot meet the MCL requirements because of characteristics of the source water that is reasonably available to the system.

(ii) A MCL variance may only be granted in accordance with 40 CFR 141.4.

(iii) A variance shall not be granted from the MCL for presence of total coliform under WAC 246-290-310(2).

(b) Treatment techniques.

(i) The board may grant a treatment technique variance to a public water system if the system demonstrates that the treatment technique is not necessary to protect the health of consumers because of the nature of the system's source water.

(ii) A treatment technique variance granted in accordance with 40 CFR 141.4.

(iii) A variance shall not be granted from any treatment technique requirement under Part 6 of chapter 246-290 WAC.

(c) The board shall condition the granting of a variance upon a compliance schedule as described in subsection (6) of this section.

(3) Exemptions.

(a) The board may grant a MCL or treatment technique exemption to a public water system that cannot meet an MCL standard or provide the required treatment in a timely manner, or both, in accordance with 40 CFR 141.4.

(b) No exemption shall be granted from:

(i) The requirement to provide a residual disinfectant concentration in the water entering the distribution system under WAC 246-290-662 or 246-290-692; or

(ii) The MCL for presence of total coliform under WAC 246-290-310(2).

(c) The board shall condition the granting of an exemption upon a compliance schedule as described in subsection (6) of this section.

(4) Waivers. The board may grant a waiver to a public water system if the system cannot meet the requirements of these regulations pertaining to any subject not covered by EPA variance and/or exemption regulations.

(5) Procedures.

(a) For variances and exemptions. The board shall consider granting a variance or exemption to a public water system in accordance with 40 CFR 141.4.

(b) For waivers. The board shall consider granting a waiver upon completion of the following actions:

(i) The purveyor applies to the department in writing. The application, which may be in the form of a letter, shall clearly state the reason for the request;

(ii) The purveyor provides notice of the purveyor's application to consumers and provides proof of the notice to the department;

(iii) The department prepares a recommendation to the board; and

(iv) The board provides notice for and conducts a public hearing on the purveyor's request.

(6) Compliance schedule.

(a) The board shall condition the granting of a variance or exemption based on a compliance schedule. The compliance schedule shall include:

(i) Actions the purveyor shall undertake to comply with a MCL or treatment technique requirement within a specified time period; and

(ii) A description and time-table for implementation of interim control measures the department may require while the purveyor completes the actions required in (a)(i) of this subsection.

(b) The purveyor shall complete the required actions in the compliance schedule within the stated time frame.

(7) Extensions to variances and exemptions.

(a) The board may extend the final date of compliance prescribed in the compliance schedule for a variance and/or exemption in accordance with 40 CFR 141.4.

[Statutory Authority: RCW 43.20.050 (2) and (3) and 70.119A.080. 03-08-037, § 246-290-060, filed 3/27/03, effective 4/27/03. Statutory Authority: RCW 43.02.050 [43.20.050]. 99-07-021, § 246-290-060, filed 3/9/99, effective 4/9/99. Statutory Authority: RCW 43.20.050. 94-14-001, § 246-290-060, filed 6/22/94, effective 7/23/94; 93-08-011 (Order 352B), § 246-290-060, filed 3/25/93, effective 4/25/93; 91-02-051 (Order 124B), recodified as § 246-290-060, filed 12/27/90, effective 1/31/91. Statutory Authority: P.L. 99-339. 89-21-020 (Order 336), § 248-54-055, filed 10/10/89, effective 11/10/89. Statutory Authority: RCW 34.04.045. 88-05-057 (Order 307), § 248-54-055, filed 2/17/88. Statutory Authority: RCW 43.20.050. 83-19-002 (Order 266), § 248-54-055, filed 9/8/83.]

PART 2.
PLANNING AND ENGINEERING DOCUMENTS

WAC 246-290-100 Water system plan. (1) The purpose of this section is to establish a uniform process for purveyors to:

(a) Demonstrate the system's operational, technical, managerial, and financial capability to achieve and maintain compliance with relevant local, state, and federal plans and regulations;

(b) Demonstrate how the system will address present and future needs in a manner consistent with other relevant plans and local, state, and federal laws, including applicable land use plans;

(c) Establish eligibility for funding under chapter 246-296 WAC.

(2) Purveyors of the following categories of community public water systems shall submit a water system plan for review and approval by the department:

(a) Systems having one thousand or more services;

(b) Systems required to develop water system plans under the Public Water System Coordination Act of 1977 (chapter 70.116 RCW);

(c) Any system experiencing problems related to planning, operation, and/or management as determined by the department;

(d) All new systems;

(e) Any expanding system; and

(f) Any system proposing to use the document submittal exception process in WAC 246-290-125.

(3) The purveyor shall work with the department to establish the level of detail for a water system plan. In gen-

eral, the scope and detail of the plan will be related to size, complexity, water supply characteristics, forecasted demand characteristics, past performance, and use of the water system. Project reports may be combined with a water system plan.

(4) In order to demonstrate system capacity, the water system plan shall address the following elements, as a minimum, for a period of at least twenty years into the future:

(a) Description of the water system, including:

(i) Ownership and management, including the current names, addresses, and telephone numbers of the owners, operators, and emergency contact persons for the system;

(ii) System history and background;

(iii) Related plans, such as coordinated water system plans, abbreviated coordinated water system plans, local land use plans, ground water management plans, and basin plans;

(iv) Service area maps, characteristics, agreements, and policies. Water systems must include their existing service area and future service area. Municipal water suppliers must define their retail service area and meet the requirements under WAC 246-290-106. Municipal water suppliers must identify where their water rights place of use will be expanded to their service area if the requirements under WAC 246-290-107 have been met; and

(v) Satellite management, if applicable.

(b) Basic planning data, including:

(i) Current population, service connections, water use, and equivalent residential units; and

(ii) Sufficient water production and consumption data to identify trends including the following elements:

(A) Monthly and annual production totals for each source, including water purchased from another public water system;

(B) Annual usage totals for each customer class as determined by the purveyor;

(C) Annual usage totals for water supplied to other public water systems; and

(D) For systems serving one thousand or more total connections, a description of the seasonal variations in consumption patterns of each customer class defined by the purveyor.

(iii) Designated land use, zoning, future population, and water demand for a consecutive six-year and twenty-year planning period within the water system's service area.

(c) Demand forecasts, developed under WAC 246-290-221, for a consecutive six-year and twenty-year planning period. These shall show future use with and without savings expected from the system's water use efficiency program.

(d) For systems serving one thousand or more total connections, a demand forecast projecting demand if the measures deemed cost-effective per WAC 246-290-810 were implemented.

(e) System analysis, including:

(i) System design standards;

(ii) Water quality analysis;

(iii) System inventory description and analysis; and

(iv) Summary of system deficiencies.

(f) Water resource analysis, including:

(i) A water use efficiency program. Municipal water suppliers must meet the requirements in WAC 246-290-810;

(ii) Source of supply analysis, which includes:

(A) An evaluation of water supply alternatives if additional water rights will be pursued within twenty years; and

(B) A narrative description of the system's water supply characteristics and the foreseeable effect from current and future use on the water quantity and quality of any body of water from which its water is diverted or withdrawn based on existing data and studies;

(iii) A water shortage response plan as a component of the reliability and emergency response requirements under WAC 246-290-420;

(iv) Water right self-assessment;

(v) Water supply reliability analysis;

(vi) Interties; and

(vii) For systems serving one thousand or more total connections, an evaluation of opportunities for the use of reclaimed water, where they exist, as defined in RCW 90.46.010(4).

(g) Source water protection under WAC 246-290-135.

(h) Operation and maintenance program under WAC 246-290-415 and 246-290-654(5), as applicable.

(i) Improvement program, including a six-year capital improvement schedule.

(j) Financial program, including demonstration of financial viability by providing:

(i) A summary of past income and expenses;

(ii) A one-year balanced operational budget for systems serving one thousand or more connections or a six-year balanced operational budget for systems serving less than one thousand connections;

(iii) A plan for collecting the revenue necessary to maintain cash flow stability and to fund the capital improvement program and emergency improvements; and

(iv) An evaluation that has considered:

(A) The affordability of water rates; and

(B) The feasibility of adopting and implementing a rate structure that encourages water demand efficiency.

(k) Other documents, such as:

(i) Documentation of SEPA compliance;

(ii) Agreements; and

(iii) Comments from each local government with jurisdiction and adjacent utilities.

(5) Purveyors intending to implement the project report and construction document submittal exceptions authorized under WAC 246-290-125 must include:

(a) Standard construction specifications for distribution mains; and/or

(b) Design and construction standards for distribution-related projects, including:

(i) Description of project report and construction document internal review procedures, including engineering design review and construction completion reporting requirements;

(ii) Construction-related policies and requirements for external parties, including consumers and developers;

(iii) Performance and sizing criteria; and

(iv) General reference to construction materials and methods.

(6) The department, at its discretion, may require reports from purveyors identifying the progress in developing their water system plans.

(7) Purveyors shall transmit water system plans to adjacent utilities and each local government with jurisdiction, to assess consistency with ongoing and adopted planning efforts.

(8) Prior to department approval of a water system plan or a water system plan update, the purveyor shall:

(a) Hold an informational meeting for the water system consumers and notify consumers in a way that is appropriate to the size of the water system; and

(b) Obtain the approval of the water system plan from the purveyor's governing body or elected governing board.

(9) Department approval of a water system plan shall be in effect for six years from the date of written approval unless:

(a) Major projects subject to SEPA as defined in WAC 246-03-030 (3)(a) are proposed that are not addressed in the plan;

(b) Changes occur in the basic planning data significantly affecting system improvements identified; or

(c) The department requests an updated plan or plan amendment.

(10) The purveyor shall update the plan and obtain department approval at least every six years. If the system no longer meets the conditions of subsection (2) of this section, the purveyor shall as directed by the department, either:

(a) Submit a water system plan amendment for review and approval with the scope to be determined by the department; or

(b) Meet the requirements under WAC 246-290-105.

[Statutory Authority: RCW 70.119A.180 and 43.20.050. 08-03-061, § 246-290-100, filed 1/14/08, effective 2/14/08. Statutory Authority: RCW 70.119A.180. 07-02-025B, § 246-290-100, filed 12/22/06, effective 1/22/07. Statutory Authority: RCW 43.20.050 (2) and (3) and 70.119A.080. 03-08-037, § 246-290-100, filed 3/27/03, effective 4/27/03. Statutory Authority: RCW 43.02.050 [43.20.050]. 99-07-021, § 246-290-100, filed 3/9/99, effective 4/9/99. Statutory Authority: RCW 43.20.050. 94-14-001, § 246-290-100, filed 6/22/94, effective 7/23/94; 93-08-011 (Order 352B), § 246-290-100, filed 3/25/93, effective 4/25/93; 91-02-051 (Order 124B), recodified as § 246-290-100, filed 12/27/90, effective 1/31/91. Statutory Authority: RCW 34.04.045. 88-05-057 (Order 307), § 248-54-065, filed 2/17/88. Statutory Authority: RCW 43.20.050. 83-19-002 (Order 266), § 248-54-065, filed 9/8/83.]

WAC 246-290-105 Small water system management program. (1) The purpose of a small water system management program is to:

(a) Demonstrate the system's operational, technical, managerial, and financial capability to achieve and maintain compliance with all relevant local, state, and federal plans and regulations; and

(b) Establish eligibility for funding under chapter 246-296 WAC.

(2) All noncommunity and all community systems not required to complete a water system plan as described under WAC 246-290-100(2) shall develop and implement a small water system management program.

(3) The purveyor shall submit this program for review and approval to the department when:

(a) A new NTNC public water system is created;

(b) An existing system has operational, technical, managerial, or financial problems, as determined by the department; or

(c) A system applies for funding under chapter 246-296 WAC.

(4) Content and detail shall be consistent with the size, complexity, past performance, and use of the public water system. General content topics shall include, but not be limited to, the following elements:

(a) System management;

(b) Annual operating permit;

(c) Water facilities inventory form;

(d) Service area and facility map. Municipal water suppliers must identify where their water rights place of use will be expanded to their service area if the requirements under WAC 246-290-107 have been met;

(e) Water right self-assessment;

(f) Description of the system's source(s) including the name and location of any body of water from which its water is diverted or withdrawn;

(g) A water use efficiency program. Municipal water suppliers must meet the requirements in WAC 246-290-810;

(h) Water production and consumption data including each of the following:

(i) Monthly and annual production for each source, including water purchased from another public water system;

(ii) Annual consumption totals for residential and nonresidential connections;

(iii) Total annual volume of water supplied to other public water systems;

(i) Average daily demand;

(j) Current population served;

(k) The forecast of average daily demand based on the system's approved number of connections that considers:

(i) Water use trends based on actual water use records; and

(ii) Applicable land use plans;

(l) An evaluation that has considered the feasibility of adopting and implementing a rate structure that encourages water demand efficiency;

(m) Source protection;

(n) Component inventory and assessment;

(o) List of planned system improvements;

(p) Water quality monitoring program;

(q) Operation and maintenance program under WAC 246-290-415(2) and 246-290-654(5) as applicable;

(r) Cross-connection control program;

(s) Emergency response plan; and

(t) Budget.

(5) The department may require changes be made to a small water system management program if necessary to effectively accomplish the program's purpose.

[Statutory Authority: RCW 70.119A.180 and 43.20.050. 08-03-061, § 246-290-105, filed 1/14/08, effective 2/14/08. Statutory Authority: RCW 70.119A.180. 07-02-025B, § 246-290-105, filed 12/22/06, effective 1/22/07. Statutory Authority: RCW 43.20.050 (2) and (3) and 70.119A.080. 03-08-037, § 246-290-105, filed 3/27/03, effective 4/27/03. Statutory Authority: RCW 43.02.050 [43.20.050]. 99-07-021, § 246-290-105, filed 3/9/99, effective 4/9/99.]

WAC 246-290-106 Duty to provide service. Municipal water suppliers required to submit a water system plan for approval under WAC 246-290-100(2) must also include in the water system plan the provisions of this section as required under RCW 43.20.260. In approving a water system

plan, the department shall ensure that water service to be provided by the water system for any new industrial, commercial, or residential use is consistent with local plans and regulations.

(1) A municipal water supplier has a duty to provide retail water service to all new service connections within its retail service area if:

(a) It can be available in a timely and reasonable manner;

(b) There is sufficient water rights to provide water service;

(c) There is sufficient capacity to serve the water in a safe and reliable manner as determined by the department; and

(d) It is consistent with the requirements of local plans and regulations and, for water service by the water utility of a city or town, with the utility service extension ordinances of the city or town.

(2) Municipal water suppliers must provide a retail service area map.

(3) Municipal water suppliers must meet the requirements of WAC 246-290-108 for their retail service area.

(4) Municipal water suppliers must provide their service policies and conditions of service including how new service will be provided.

(5) Municipal water suppliers may provide temporary water service to another water system if a written agreement with the water system is in place.

(6) To resolve a significant public health and safety concern, the department may allow water service to be extended prior to meeting the requirements of this section.

[Statutory Authority: RCW 70.119A.180 and 43.20.050. 08-03-061, § 246-290-106, filed 1/14/08, effective 2/14/08.]

WAC 246-290-107 Place of use expansion. The place of use of a surface or ground water right may be expanded to include any portion of the approved service area that was not previously within the place of use for the water right when documented in an approved planning or engineering document under chapter 43.20 RCW or in accordance with procedures adopted under chapter 70.116 RCW. This occurs as an effect of the department's approval of a service area identified in a water system plan, water system plan amendment, small water system management program, engineering document, or as an effect of the local legislative authority's approval of a service area as part of a coordinated water system plan.

(1) The following conditions must be met:

(a) The municipal water supplier is in compliance with the terms of the water system plan or small water system management program, including those regarding water use efficiency.

(b) The alteration of the place of use is not inconsistent regarding an area added to the place of use with any local plans and regulations.

(c) The alteration of the place of use is not inconsistent regarding an area added to the place of use with any watershed plan approved under chapter 90.82 RCW or a comprehensive watershed plan approved under RCW 90.54.040(1) after September 3, 2003, if such a watershed plan has been approved for the area.

(2) As part of the planning or engineering document, municipal water suppliers must:

(a) Identify the portions of the service area where the place of use will be expanded.

(b) Document that subsection (1)(a) and (c) of this section are met.

(c) Meet the requirements of WAC 246-290-108 for the portions of the service area where the place of use will be expanded.

[Statutory Authority: RCW 70.119A.180 and 43.20.050. 08-03-061, § 246-290-107, filed 1/14/08, effective 2/14/08.]

WAC 246-290-108 Consistency with local plans and regulations. Consistency with local plans and regulations applies to planning and engineering documents under WAC 246-290-106, 246-290-107, and 246-290-110.

(1) Municipal water suppliers must include a consistency review and supporting documentation in its planning or engineering document describing how it has considered consistency with local plans and regulations. This review must include elements of local plans and regulations, as they reasonably relate to water service to be provided by a municipal water supplier for any new connection, including:

(a) Land use and zoning within the applicable service area;

(b) Six-year growth projections used in the demand forecast;

(c) Utility service extension ordinances of a city or town when water service is provided by the water utility of the city or town;

(d) Provisions of water service for new service connections; and

(e) Other relevant elements related to water supply planning as determined by the department.

(2) Municipal water suppliers must request each local government with jurisdiction over the applicable service area to provide a consistency review.

(a) Municipal water suppliers shall provide each local government with jurisdiction sixty days to review the planning or engineering document unless another state statute or state regulation requires a different time frame. The municipal water supplier must provide the local government with jurisdiction an additional thirty days for review if requested.

(b) If an inconsistency is documented by the local government with jurisdiction within the time frame outlined in (a) of this subsection, the municipal water supplier must provide the inconsistency information to the department.

(c) If the local government with jurisdiction documents in writing an inconsistency exists with local plans and regulations, the municipal water supplier shall address the inconsistency. The local government with jurisdiction shall be provided sixty days to review any revisions or responses that address the inconsistency.

(3) If the local government with jurisdiction does not provide a consistency review, the municipal water supplier shall complete the consistency review as described in subsection (1) of this section. The municipal water supplier must also document:

(a) The amount of time provided to each local government with jurisdiction to review the planning and engineering documents as defined in subsection (2) of this section; and

(b) The efforts taken to request a consistency review from the local government with jurisdiction.

[Statutory Authority: RCW 70.119A.180 and 43.20.050. 08-03-061, § 246-290-108, filed 1/14/08, effective 2/14/08.]

WAC 246-290-110 Project report. (1) The project report is a written document that describes why a project is being proposed and includes engineering design calculations showing how the project will meet its objectives.

(2) Purveyors shall submit project reports to the department and obtain written approval prior to installation or construction of any new water system, water system extension, or improvement. The department may require the submittal of a project report for the purpose of resolving a system operational problem. Exceptions to this requirement are listed in WAC 246-290-125.

(3) Project reports submitted for approval by purveyors who are required to have a water system plan will not be considered for approval unless a current, approved water system plan that adequately addresses the project is on file with the department. In the event that a purveyor of an existing system does not have such a water system plan, the department may enter into a compliance agreement with the purveyor that grants a time extension to complete the water system plan.

(4) Project reports shall be consistent with the standards identified in Part 3 of this chapter. Depending on the complexity and type of project or problem, the report shall include the following elements (information contained in a current water system plan or other engineering document previously approved by the department need not be duplicated, but must be specifically referenced):

(a) Project description, including:

(i) Why the project is being proposed, how problem(s) (if any) are to be addressed, and the relationship of the project to other system components;

(ii) A statement of SEPA determination of nonsignificance or justification of why SEPA does not apply to project;

(iii) Source development information under WAC 246-290-130, 246-290-132, and 246-290-135, if applicable;

(iv) Type of treatment under WAC 246-290-250, if applicable; and

(v) A summary of consumer and user complaints.

(b) Planning data. If a purveyor has a water system plan or small water system management program, the project report shall indicate the proposed project's relationship to the plan. If the purveyor is not required by WAC 246-290-100 to have a water system plan, planning related information shall include:

(i) General project background with population and water demand forecasts;

(ii) Service area map. Municipal water suppliers must identify where their water rights place of use will be expanded to their service area if the requirements under WAC 246-290-107 have been met;

(iii) How the project will impact neighboring water systems;

(iv) Local requirements, such as fire flow;

(v) Additional management responsibilities under WAC 246-290-105, 246-290-415, and chapter 246-292 WAC;

(vi) Implementation strategies or proposed construction schedule;

(vii) Estimated capital and annual operating cost, and method of financing, if applicable.

(c) An analysis of alternatives, including description of options and rationale for selecting the proposed option.

(d) A review of water quality as it relates to the purpose of the proposed project. If a project involves treatment and/or a filtration facility pilot study, refer to department guidance, reporting requirements for corrosion control under 40 CFR 141.90, and tracer studies under WAC 246-290-636(5).

(e) When the project involves a new source or an increase in system physical capacity, a review of water quantity, including a water rights assessment, unless the assessment has previously been submitted in a water system plan or small water system management program that has been approved by the department. The purveyor shall take any follow-up action as directed by the department, to determine conformance with applicable state water rights laws.

(f) Engineering calculations including sizing justification, hydraulic analysis, physical capacity analysis, and other relevant technical considerations necessary to support the project.

(g) Design and construction standards, including performance standards, construction materials and methods, and sizing criteria, if applicable.

(h) Project reports for the design of treatment facilities shall include the following:

(i) Detailed design criteria and calculations to support the proposed treatment processes, process control, and process utilities; and

(ii) Proposed methods and schedules for start up, testing, and operation of the completed treatment facility.

(i) Legal considerations, such as ownership, right of way, sanitary control area (SCA), restrictive covenants, restrictions related to water use that are recorded on titles or deeds to properties, and relationship with the boundary review board and UTC.

(j) Other necessary department-determined considerations.

[Statutory Authority: RCW 70.119A.180 and 43.20.050. 08-03-061, § 246-290-110, filed 1/14/08, effective 2/14/08. Statutory Authority: RCW 43.02.-050 [43.20.050]. 99-07-021, § 246-290-110, filed 3/9/99, effective 4/9/99. Statutory Authority: RCW 43.20.050. 94-14-001, § 246-290-110, filed 6/22/94, effective 7/23/94; 93-08-011 (Order 352B), § 246-290-110, filed 3/25/93, effective 4/25/93; 91-02-051 (Order 124B), recodified as § 246-290-110, filed 12/27/90, effective 1/31/91. Statutory Authority: P.L. 99-339. 89-21-020 (Order 336), § 248-54-086, filed 10/10/89, effective 11/10/89. Statutory Authority: RCW 34.04.045. 88-05-057 (Order 307), § 248-54-086, filed 2/17/88.]

WAC 246-290-120 Construction documents. (1) Construction documents shall identify how specific projects will be constructed while satisfying the requirements and conditions established in the project report and/or the water system plan.

(2) Purveyors shall submit construction documents to the department and obtain written approval prior to construction of any new water system, or water system extension or improvement. Exceptions to this requirement are listed in WAC 246-290-125.

(3) Construction documents submitted for approval by purveyors who are required to have a water system plan will not be considered for approval unless a current, approved water system plan that adequately addresses the project is on file with the department. In the event that a purveyor of an

existing system does not have a water system plan, the department may enter into a compliance agreement with the purveyor that grants a time extension to complete the water system plan.

(4) Construction documents shall be consistent with the standards identified in Part 3 of this chapter and shall include, at a minimum, the following:

(a) Drawings. Include detailed drawings of each project component;

(b) Material specifications. List detailed material specifications for each project component;

(c) Construction specifications.

(i) List detailed construction specifications and assembly techniques for carrying out the project;

(ii) Testing. Identify testing criteria and procedures for each applicable portion of the project;

(iii) Disinfection. Identify specific disinfection procedures that shall conform with AWWA standards or other standards acceptable to the department;

(iv) Inspection. Identify provisions for inspection of the installation of each project component. See WAC 246-290-040 and subsection (5) of this section for construction reporting requirements;

(d) Change orders. All significant changes shall be submitted to and approved by the department in writing. The change order must identify who will be responsible for obtaining department approval and how change orders will be reported to the department. Significant means a change in materials used, deviations from original intent of project, or changes made to the physical capacity of the project;

(e) Record drawings. Record drawings provided to the purveyor following the completion of the project shall be maintained and available to the department upon request.

(5) Purveyors shall submit a construction completion report (department form) to the department within sixty days of completion and before use of distribution-related projects in accordance with WAC 246-290-125 (3)(f), or other project approved for construction by the department. Exceptions to this requirement are projects listed in WAC 246-290-125(1). The form shall:

(a) Bear the seal, date, and signature of a professional engineer licensed in the state of Washington;

(b) State the project is constructed and is completed in accordance with department regulations and principles of standard engineering practice, including physical testing procedures, water quality tests, and disinfection practices; and

(c) Document system physical capacity to serve consumers if the project results in a change (increase or decrease) in physical capacity.

(6) The purveyor shall submit a new or updated water facilities inventory (WFI) form (department form) with the construction completion report (department form) for a new water system, whenever there are changes or additions to an existing water system that would change information of the WFI, or when required by the department.

(7) If the project results in an increase in the water system's physical capacity, the purveyor shall submit a water right self-assessment, unless the assessment has previously been submitted in a project report, water system plan, or small water system management program, that has been approved by the department. The purveyor shall take any follow-up action, as directed by the department, to determine conformance with applicable state water rights laws.

(8) Approval of construction documents shall be in effect for two years unless the department determines a need to withdraw the approval. An extension of the approval may be obtained by submitting a status report and a written schedule for completion. Extensions may be subject to additional terms and conditions imposed by the department.

(9) Purveyors of new water systems must meet the ownership requirements of WAC 246-290-035 and the water system planning requirements of WAC 246-290-100 or 246-290-105 before the department will review and approve the purveyors' construction documents.

[Statutory Authority: RCW 70.119A.180 and 43.20.050. 08-03-061, § 246-290-120, filed 1/14/08, effective 2/14/08. Statutory Authority: RCW 43.02.-050 [43.20.050]. 99-07-021, § 246-290-120, filed 3/9/99, effective 4/9/99. Statutory Authority: RCW 43.20.050. 93-08-011 (Order 352B), § 246-290-120, filed 3/25/93, effective 4/25/93; 91-02-051 (Order 124B), recodified as § 246-290-120, filed 12/27/90, effective 1/31/91. Statutory Authority: RCW 34.04.045. 88-05-057 (Order 307), § 248-54-096, filed 2/17/88.]

WAC 246-290-125 Project report and construction document submittal exceptions. (1) The following projects do not require project reports under WAC 246-290-110 and construction documents under WAC 246-290-120 to be submitted to the department for review and approval prior to installation:

(a) Installation of valves, fittings, and meters, including backflow prevention assemblies;

(b) Installation of hydrants under WAC 246-290-230 (3) and (6);

(c) Repair of a system component or replacement with a component of a similar capacity and material in accordance with the original construction specifications of the approved design. For the purposes of replacing existing pipe, similar capacity includes one standard pipe size larger.

(d) Maintenance or painting of surfaces not contacting potable water.

(2) Purveyors may elect to not submit to the department for review and approval project reports under WAC 246-290-110 and construction documents under WAC 246-290-120 for new distribution mains if:

(a) The purveyor has on file with the department a current department-approved water system plan that includes standard construction specifications for distribution mains; and

(b) The purveyor maintains on file a completed construction completion report (department form) in accordance with WAC 246-290-120(5) and makes it available for review upon request by the department.

(3) Purveyors may elect to not submit to the department for review and approval project reports under WAC 246-290-110 and construction documents under WAC 246-290-120 for review and approval of other distribution-related projects as defined in WAC 246-290-010 providing:

(a) The purveyor has on file with the department a current department-approved water system plan, in accordance with WAC 246-290-100(5);

(b) The purveyor submits a written request with a new water system plan or an amendment to a water system plan, and updates the request with each water system plan update. The written request should specifically identify the types of

projects or facilities for which the submittal exception procedure is requested;

(c) The purveyor has documented that they have employed or hired under contract the services of a professional engineer licensed in the state of Washington to review distribution-related projects not submitted to the department for review and approval. The review engineer and design engineer shall not be the same individual. The purveyor shall provide written notification to the department whenever they propose to change their designated review engineer;

(d) If the project is a new transmission main, storage tank, or booster pump station, it must be identified in the capital improvement program of the utility's water system plan. If not, either the project report must be submitted to the department for review and approval, or the water system plan must be amended;

(e) A project summary file is maintained by the purveyor for each project and made available for review upon request by the department, and includes:

(i) Descriptive project summary;

(ii) Anticipated completion schedule;

(iii) Consistency with utility's water system plan;

(iv) Water right self-assessment, where applicable;

(v) Change in system physical capacity;

(vi) Copies of original design and record drawings;

(vii) Engineering design review report (department form). The form shall:

(A) Bear the seal, date, and signature of a professional engineer licensed in the state of Washington prior to the start of construction;

(B) Provide a descriptive reference to completed project report and/or construction documents reviewed, including date of design engineer's seal and signature; and

(C) State the project report and/or construction documents have been reviewed, and the design is in accordance with department regulations and principles of standard engineering practice;

(f) The construction completion report is submitted to the department in accordance with WAC 246-290-120(5) for new storage tanks and booster pump stations, and maintained on file with the water system for all other distribution-related projects;

(g) A WFI is completed in accordance with WAC 246-290-120(6); and

(h) The purveyor meets the requirements of chapter 246-294 WAC to have a category "green" operating permit.

(4) Source of supply (including interties) and water quality treatment-related projects shall not be eligible for the submittal exception procedure.

(5) Purveyors not required to prepare a water system plan under WAC 246-290-100 shall be eligible for the submittal exception procedure if the purveyor:

(a) Has a department-approved water system plan meeting the requirements of WAC 246-290-100;

(b) Complies with all other requirements in this section; and

(c) Ensures that all work required to be prepared under the direction of a professional engineer be accomplished per WAC 246-290-040 and chapter 18.43 RCW.

[Statutory Authority: RCW 70.119A.180 and 43.20.050. 08-03-061, § 246-290-125, filed 1/14/08, effective 2/14/08. Statutory Authority: RCW 43.20.-050 (2) and (3) and 70.119A.080. 03-08-037, § 246-290-125, filed 3/27/03, effective 4/27/03. Statutory Authority: RCW 43.02.050 [43.20.050]. 99-07-021, § 246-290-125, filed 3/9/99, effective 4/9/99.]

WAC 246-290-130 Source approval. (1) Every purveyor shall obtain drinking water from the highest quality source feasible. No new source, previously unapproved source, or modification of an existing source shall be used as a public water supply without department approval. No intake or other connection shall be maintained between a public water system and a source of water not approved by the department.

(2) Before initiating source development or modification, the purveyor shall contact the department to identify submittal requirements.

(3) Any party seeking source approval shall provide the department sufficient documentation, in a project report, construction documents, or in supplemental documents, that the source:

(a) Is reasonable and feasible for the type and size of the system;

(b) May legally be used in conformance with state water rights laws;

(c) Supplies water that is physically and reliably available in the necessary quantities, as shown in:

(i) A hydrogeologic assessment of the proposed source;

(ii) A general description of the watershed, spring, and/or aquifer recharge area affecting the quantity or quality of flow, which includes seasonal variation and upstream water uses that may significantly affect the proposed source;

(iii) For ground water and spring sources, well source development data that are available from a pump test at the maximum design rate and duration, or are available from other sources of information, that establish pump settings (depth) in the well and demonstrate adequacy of water quantity to meet design criteria while not leading to water quality problems;

(iv) For ground water and spring sources, installation of a source meter or other equivalent device that reliably measures volume of flow into the system;

(d) Is, or is not, a GWI under WAC 246-290-640, and meets or can meet the applicable requirements for GWI sources as described in that section including treatment;

(e) Adequately provides for source protection, as shown in:

(i) For surface water and GWI sources, the watershed control program identified under WAC 246-290-135 and Part 6 of this chapter;

(ii) For wells, a preliminary department susceptibility assessment or equivalent information, and preliminary WHPA delineation and contaminant inventory, under the requirements for sanitary control and wellhead protection under WAC 246-290-135;

(f) Is designed and constructed in conformance with this chapter, and relevant requirements of chapter 173-160 WAC (department of ecology well construction standards);

(g) Meets water quality standards under WAC 246-290-310, as shown in an initial water quality analysis that includes, at a minimum, the following:

(i) Bacteriological;

(ii) Complete inorganic chemical and physical except that the MCL for arsenic under WAC 246-290-310 does not apply to TNC systems;

(iii) Complete VOC;

(iv) Radionuclides, if source approval is requested for a community system;

(v) SOC, except where waived or not required under WAC 246-290-310; and

(vi) Any other information required by the department relevant to the circumstances of the particular source.

Sources that otherwise would not meet water quality standards may be approved if treatment is provided.

(4) The required documentation under subsection (3) of this section shall include, at a minimum:

(a) A water right self-assessment;

(b) A map showing the project location and vicinity;

(c) A map depicting topography, distances to the surface water intake, well or spring from existing property lines, buildings, potential sources of contamination, ditches, drainage patterns, and any other natural or man-made features affecting the quality or quantity of water;

(d) The dimensions, location, and legal documentation of the SCA under WAC 246-290-135;

(e) A copy of the on-site inspection form completed by the department or local health department representative;

(f) A copy of the water well report including the unique well identification tag number, depth to open interval or top of screened interval, overall depth of well from the top of the casing, vertical elevation, and location (both plat location and latitude/longitude); and

(g) Documentation of source meter installation. The purveyor may utilize other documents, such as a water system plan, susceptibility assessment, wellhead protection program, project report, or construction documents, to provide the documentation and information to the department, provided that the documents are current, and the purveyor indicates the location in the document of the relevant information.

(5) If treatment of a source is necessary to meet water quality standards, the purveyor may be required to meet the provisions of WAC 246-290-250 and Part 6 of this chapter, if applicable, prior to or as a condition of approval.

(6) An intertie must be adequately described in a written agreement between the purveyor and the supplier of the water, and otherwise meet the requirements of WAC 246-290-132.

(7) The purveyor shall not construct facilities for source development and use without prior approval of the department pursuant to the provisions of WAC 246-290-120.

(8) The purveyor may request a conditional source approval, such as one that sets limits on use or requires interim treatment, if further analysis of the quality of the source is required before final approval.

(9) For sources or supplies of water used by bottled water or ice plants to produce bottled water or ice:

(a) If the bottled water or ice plant is a Group A community water system and the plant uses the system's source for the water that is bottled or made into ice, the source and supply used for the bottled water and ice shall meet the applicable Group A requirements;

(b) If the bottled water or ice plant uses its own source for the water that is bottled or made into ice, and the plant is not a Group A community water system, the owner or operator shall obtain source approval from the department, and the source water shall meet the ongoing source water quality monitoring requirements for a Group A community system;

(c) If the bottled water or ice plant purchases the water for bottling or making ice from another source or supply, the water shall meet the minimum requirements for a Group A community water system, and the owner or operator of the plant shall ensure that the water meets the requirements;

(d) The source or supply for the water that is bottled or made into ice shall be protected from contamination prior to the bottling or ice making process; and

(e) In addition to the requirements imposed under this subsection, the processing of bottled water shall be subject to regulation by the state department of agriculture and the United States Food and Drug Administration.

[Statutory Authority: RCW 70.119A.180 and 43.20.050. 08-03-061, § 246-290-130, filed 1/14/08, effective 2/14/08. Statutory Authority: RCW 43.20.-050 and 70.119A.080. 04-04-056, § 246-290-130, filed 1/30/04, effective 3/1/04. Statutory Authority: RCW 43.02.050 [43.20.050]. 99-07-021, § 246-290-130, filed 3/9/99, effective 4/9/99. Statutory Authority: RCW 43.20.050. 94-14-001, § 246-290-130, filed 6/22/94, effective 7/23/94; 93-08-011 (Order 352B), § 246-290-130, filed 3/25/93, effective 4/25/93. Statutory Authority: Chapter 43.20 RCW. 91-07-031 (Order 150B), § 246-290-130, filed 3/15/91, effective 4/15/91. Statutory Authority: RCW 43.20.050. 91-02-051 (Order 124B), recodified as § 246-290-130, filed 12/27/90, effective 1/31/91. Statutory Authority: P.L. 99-339. 89-21-020 (Order 336), § 248-54-097, filed 10/10/89, effective 11/10/89. Statutory Authority: RCW 34.04.045. 88-05-057 (Order 307), § 248-54-097, filed 2/17/88.]

WAC 246-290-132 Interties. (1) No interties shall be used and/or constructed as a public water supply without department approval.

(2) Interties shall not be eligible for submittal exceptions pursuant to WAC 246-290-125.

(3) Prior to department approval, purveyors proposing nonemergency interties shall ensure that the intertie is addressed:

(a) In an approved coordinated water system plan, water system plan, water system plan update, water system plan amendment, or small water system management program including:

(i) Location of the proposed intertie;

(ii) Date it is proposed to be utilized;

(iii) The purpose, physical capacity, service area, and proposed usage of the intertie;

(iv) Copy of the intertie agreement between purveyors;

(v) Description of how the intertie:

(A) Improves overall system reliability;

(B) Enhances the manageability of the system;

(C) Provides opportunities for conjunctive use; or

(D) Delays or avoids the need to develop new water sources;

(vi) Identification of any potential public health or safety concerns;

(vii) Discussion of any water quality and treatment issues;

(viii) Demonstration of the source capacity and hydraulic capacity of the supplying and receiving systems at the designed flow rate through the intertie;

(ix) Water right self-assessment;

(x) Identification of alternative sources that will be utilized when the intertie agreement expires if the water is not being provided in perpetuity; and

(xi) Identification and comparison of alternatives if any.

(b) In construction documents under WAC 246-290-120 including:

(i) Demonstration of the installation of a source meter to measure water exchanged; and

(ii) Water right self-assessment, if not previously provided to the department. When RCW 90.03.383 requires a water right or water right change to be issued by the department of ecology, construction work on the intertie shall not begin, until the department of ecology issues the required water right document.

(4) Emergency use interties are interconnections between public water systems permitting the temporary exchange or delivery of water between those systems only in cases of emergency that result in permanent supplies being unavailable for use. Prior to department approval, purveyors proposing emergency use interties shall ensure that the emergency intertie is addressed:

(a) In an approved coordinated water system plan, water system plan, water system plan update, water system plan amendment, or small water system management program including:

(i) Description of the intended use of the emergency intertie;

(ii) Location of the proposed intertie;

(iii) Date the intertie is intended to be operational;

(iv) Copy of the intertie agreement between purveyors detailing the conditions and limitations of the intertie; and

(v) Hydraulic analysis conducted to identify the impacts upon each water system.

(b) In a project report under WAC 246-290-110 or in a construction document under WAC 246-290-120.

(5) Purveyors proposing interties shall apply to the department of ecology for water right changes as provided in RCW 90.03.383. Except as provided in RCW 90.03.383(7) and 90.03.390, no interties may be constructed without department of ecology action on the proposed change.

(6) The purveyor may be required to have emergency interties approved as nonemergency interties where the interties are used frequently or on a long-term basis. If the department makes a determination, the intertie will require approval in accordance with subsection (3) of this section.

(7) Intertie agreements between purveyors shall include:

(a) Identification of specific time periods in which water will be provided;

(b) Identification of the volume of water available for use, including any seasonal or other restrictions; and

(c) Identification of how water use efficiency programs, data collection, water demand forecasting, and other operational matters will be coordinated.

[Statutory Authority: RCW 70.119A.180 and 43.20.050. 08-03-061, § 246-290-132, filed 1/14/08, effective 2/14/08. Statutory Authority: RCW 70.119A.180. 07-02-025B, § 246-290-132, filed 12/22/06, effective 1/22/07. Statutory Authority: RCW 43.02.050 [43.20.050]. 99-07-021, § 246-290-132, filed 3/9/99, effective 4/9/99.]

WAC 246-290-135 Source water protection. (1) The department may require monitoring and controls in addition to those specified in this section if, in the opinion of the department, a potential risk exists to the water quality of a source.

(2) SCA.

(a) The purveyor shall maintain an SCA around all sources for the purpose of protecting them from existing and potential sources of contamination.

(b) For wells and springs, the minimum SCA shall have a radius of one hundred feet (thirty meters) and two hundred feet (sixty meters) respectively, unless engineering justification demonstrates that a smaller area can provide an adequate level of source water protection. The justification shall address geological and hydrological data, well construction details, mitigation measures, and other relevant factors necessary to assure adequate sanitary control.

(c) The department may require a larger SCA than specified in (b) of this subsection, or additional mitigation measures if land use, geological, and/or hydrological data support the decision. It shall be the purveyor's responsibility to obtain the protection needed.

(d) The purveyor shall prohibit the construction, storage, disposal, or application of any source of contamination within the SCA without the permission of the purveyor.

(e) The SCA shall be owned by the purveyor in fee simple, or the purveyor shall have the right to exercise complete sanitary control of the land through other legal provisions.

(f) A purveyor, owning all or part of the SCA in fee simple or having possession and control, shall send to the department copies of legal documentation, such as a duly recorded declaration of covenant, restricting the use of the land. This legal documentation shall state:

(i) Constructing, storing, disposing, or applying any source of contamination is prohibited without the permission of the purveyor; and

(ii) If any change in ownership of the system or SCA is considered, all affected parties shall be informed of these requirements.

(g) Where portions of the control area are in the possession and control of another, the purveyor shall obtain a duly recorded restrictive covenant which shall run with the land, restricting the use of the land in accordance with this chapter and provide the department with copies of the appropriate documentation.

(3) Wellhead protection.

(a) Purveyors of water systems using ground water or spring sources shall develop and implement a wellhead protection program.

(b) The wellhead protection program shall be part of the water system plan required under WAC 246-290-100 or the small water system management program required under WAC 246-290-105.

(c) The purveyor's wellhead protection program shall contain, at a minimum, the following elements:

(i) A completed susceptibility assessment or equivalent information;

(ii) WHPA delineation for each well, wellfield, or spring with the six month, one, five and ten year time of travel boundaries marked, or boundaries established using alternate criteria approved by the department in those settings where ground water time of travel is not a reasonable delineation criteria. WHPA delineations shall be done in accordance with

recognized methods such as those described in the following sources:

(A) Department guidance on wellhead protection; or

(B) EPA guidance for delineation of wellhead protection areas;

(iii) An inventory, including identification of site locations and owners/operators, of all known and potential ground water contamination sources located within the defined WHPA(s) having the potential to contaminate the source water of the well(s) or spring(s). This list shall be updated every two years;

(iv) Documentation of purveyor's notification to all owners/operators of known or potential sources of ground water contamination listed in (c)(B)(iii) of this subsection;

(v) Documentation of purveyor's notification to regulatory agencies and local governments of the boundaries of the WHPA(s) and the findings of the WHPA inventory;

(vi) A contingency plan to ensure consumers have an adequate supply of potable water in the event that contamination results in the temporary or permanent loss of the principal source of supply (major well(s) or wellfield); and

(vii) Documentation of coordination with local emergency incident responders (including police, fire and health departments), including notification of WHPA boundaries, results of susceptibility assessment, inventory findings, and contingency plan.

(4) Watershed control program.

(a) Purveyors of water systems using surface water or GWI sources shall develop and implement a watershed control program under Part 6 of chapter 246-290 WAC as applicable.

(b) The watershed control program shall be part of the water system plan required in WAC 246-290-100 or the small water system management program required in WAC 246-290-105.

(c) The purveyor's watershed control program shall contain, at a minimum, the following elements:

(i) Watershed description and inventory, including location, hydrology, land ownership and activities that may adversely affect source water quality;

(ii) An inventory of all potential surface water contamination sources and activities, including identification of site locations and owner/operators, located within the watershed and having the significant potential to contaminate the source water quality;

(iii) Watershed control measures, including documentation of ownership and relevant written agreements, and monitoring of activities and water quality;

(iv) System operation, including emergency provisions; and

(v) Documentation of water quality trends.

(d) The purveyor shall submit the watershed control program to the department for approval. Following department approval, the purveyor shall implement the watershed control program as approved.

(e) Purveyors of systems using unfiltered surface or GWI sources and meeting the criteria to remain unfiltered as specified in WAC 246-290-690 shall submit an annual report to the department that summarizes the effectiveness of the watershed control program. Refer to WAC 246-290-690 for further information about this report.

(f) The purveyor shall update the watershed control program at least every six years, or more frequently if required by the department.

[Statutory Authority: RCW 70.119A.180 and 43.20.050. 08-03-061, § 246-290-135, filed 1/14/08, effective 2/14/08. Statutory Authority: RCW 43.02.-050 [43.20.050]. 99-07-021, § 246-290-135, filed 3/9/99, effective 4/9/99. Statutory Authority: RCW 43.20.050. 94-14-001, § 246-290-135, filed 6/22/94, effective 7/23/94; 93-08-011 (Order 352B), § 246-290-135, filed 3/25/93, effective 4/25/93.]

WAC 246-290-140 Existing system as-built approval. At the discretion of the department, owners of existing systems without approved construction documents shall provide information necessary to establish the extent of the water system's compliance with this chapter. At a minimum, this shall include submission and approval by the department of:

(1) A water system plan or small water system management program;

(2) As-built or record drawings; and

(3) Water quality analyses.

[Statutory Authority: RCW 43.02.050 [43.20.050]. 99-07-021, § 246-290-140, filed 3/9/99, effective 4/9/99. Statutory Authority: RCW 43.20.050. 94-14-001, § 246-290-140, filed 6/22/94, effective 7/23/94; 91-02-051 (Order 124B), recodified as § 246-290-140, filed 12/27/90, effective 1/31/91. Statutory Authority: P.L. 99-339. 89-21-020 (Order 336), § 248-54-098, filed 10/10/89, effective 11/10/89.]

PART 3.
DESIGN OF PUBLIC WATER SYSTEMS

WAC 246-290-200 Design standards. (1) Purveyors shall ensure that good engineering criteria and practices are used in the design and construction of all public water systems, such as those set out in:

(a) Department guidance on design for Group A public water systems;

(b) The most recent published edition of the International Building Code (IBC), the Uniform Plumbing Code (UPC), and other national model codes adopted in Washington state;

(c) The most recent published edition of *Recommended Standards for Water Works, A Committee Report of the Great Lakes - Upper Mississippi River Board of State Public Health and Environmental Managers*;

(d) Standard specifications of the American Public Works Association, the American Society of Civil Engineers, AWWA, or the American Society for Testing and Materials;

(e) Design criteria, such as contained in current college texts and professional journal articles, acceptable to the department;

(f) Chapter 173-160 WAC *Minimum Standards for Construction and Maintenance of Water Wells*;

(g) The latest edition of the PNWS-AWWA Cross-Connection Control Manual, or the University of Southern California (USC) Manual of Cross-Connection Control.

(2) In addition, purveyors of new or expanding public water systems shall consider and use, as appropriate, the following design factors:

(a) Historical water use;

(b) Community versus recreational uses of water;

(c) Local conditions and/or regulations;

(d) Community expectations;

(e) Public Water System Coordination Act considerations where appropriate;

(f) Provisions for systems and component reliability in accordance with WAC 246-290-420;

(g) Wind pressures, seismic risk, snow loads, and flooding;

(h) Other risks from potential disasters, as feasible; and

(i) Other information as required by the department.

[Statutory Authority: RCW 70.119A.180 and 43.20.050. 08-03-061, § 246-290-200, filed 1/14/08, effective 2/14/08. Statutory Authority: RCW 43.02.-050 [43.20.050]. 99-07-021, § 246-290-200, filed 3/9/99, effective 4/9/99. Statutory Authority: RCW 43.20.050. 93-08-011 (Order 352B), § 246-290-200, filed 3/25/93, effective 4/25/93; 91-02-051 (Order 124B), recodified as § 246-290-200, filed 12/27/90, effective 1/31/91. Statutory Authority: RCW 34.04.045. 88-05-057 (Order 307), § 248-54-105, filed 2/17/88. Statutory Authority: RCW 43.20.050. 83-19-002 (Order 266), § 248-54-105, filed 9/8/83.]

WAC 246-290-220 Drinking water materials and additives. (1) All materials shall conform to the ANSI/NSF Standard 61 if in substantial contact with potable water supplies. For the purposes of this section, "substantial contact" means the elevated degree that a material in contact with water may release leachable contaminants into the water such that levels of these contaminants may be unacceptable with respect to either public health or aesthetic concerns. It should take into consideration the total material/water interface area of exposure, volume of water exposed, length of time water is in contact with the material, and level of public health risk. Examples of water system components that would be considered to be in "substantial contact" with drinking water are filter media, storage tank interiors or liners, distribution piping, membranes, exchange or adsorption media, or other similar components that would have high potential for contacting the water. Materials associated with components such as valves, pipe fittings, debris screens, gaskets, or similar appurtenances would not be considered to be in substantial contact.

(2) Materials or additives in use prior to the effective date of these regulations that have not been listed under ANSI/NSF Standard 60 or 61 may be used for their current applications until the materials are scheduled for replacement, or that stocks of existing additives are depleted and scheduled for reorder.

(3) Any treatment chemicals, with the exception of commercially retailed hypochlorite compounds such as unscented Clorox, Purex, etc., added to water intended for potable use must comply with ANSI/NSF Standard 60. The maximum application dosage recommendation for the product certified by the ANSI/NSF Standard 60 shall not be exceeded in practice.

(4) Any products used to coat, line, seal, patch water contact surfaces or that have substantial water contact within the collection, treatment, or distribution systems must comply with the appropriate ANSI/NSF Standard 60 or 61. Application of these products must comply with recommendations contained in the product certification.

(5) The department may accept continued use of, and proposals involving, certain noncertified chemicals or materials on a case-by-case basis, if all of the following criteria are met:

(a) The chemical or material has an acknowledged and demonstrable history of use in the state for drinking water applications;

(b) There exists no substantial evidence that the use of the chemical or material has caused consumers to register complaints about aesthetic issues, or health related concerns, that could be associated with leachable residues from the material; and

(c) The chemical or material has undergone testing through a protocol acceptable to the department and has been found to not contribute leachable compounds into drinking water at levels that would be of public health concern.

(6) Any pipe, pipe fittings, fittings, fixtures, solder, or flux used in the installation or repair of a public water system shall be lead-free:

(a) This prohibition shall not apply to leaded joints necessary for the repair of cast iron pipes; and

(b) Within the context of this section, lead-free shall mean:

(i) No more than eight percent lead in pipes and pipe fittings;

(ii) No more than two-tenths of one percent lead in solder and flux; and

(iii) Fittings and fixtures that are in compliance with standards established in accordance with 42 USC 300g-6(e).

[Statutory Authority: RCW 43.20.050 (2) and (3) and 70.119A.080. 03-08-037, § 246-290-220, filed 3/27/03, effective 4/27/03. Statutory Authority: RCW 43.02.050 [43.20.050]. 99-07-021, § 246-290-220, filed 3/9/99, effective 4/9/99. Statutory Authority: RCW 43.20.050. 91-02-051 (Order 124B), recodified as § 246-290-220, filed 12/27/90, effective 1/31/91. Statutory Authority: RCW 34.04.045. 88-05-057 (Order 307), § 248-54-131, filed 2/17/88.]

WAC 246-290-221 Water demand design criteria. (1) Except as provided in this section, expanding systems shall use water demand design for average day demand (ADD), and peak periods of demand such as maximum day demand (MDD), and peak hourly demand (PHD) that are based upon actual metered water use records. The data collected shall be sufficient to account for seasonal or other cyclic changes in water demand, and shall correlate to the maximum number of full-time or part-time equivalent residential units in service at any time.

(2) For seasonally used, transitory noncommunity, or recreational developments the design for ADD, MDD, and PHD shall be based upon metered water uses whenever such data is available. The data must account for the daily population using the water over the time that records are collected, and must reflect the uses associated with maximum occupancy for the development. The design demands for these developments apply only to part-time uses, and may not be applied to structures or dwellings that can be permanently occupied.

(3) In the absence of metered use or other comparable information, the following sources of design information may be used:

(a) Comparable metered water use data from analogous water systems. Analogous systems are those with similar characteristics, such as demographics, housing sizes, income levels, lot sizes, climate, water pricing structure, water use efficiency practices, use restrictions, and soils and landscaping; or

(b) Design criteria or guidelines in the most recent edition of the department manual for design of Group A public water systems.

(4) The design for water systems based upon metered water use records shall have an MDD no lower than three hundred fifty gallons per day per equivalent residential unit (ERU), except for the design of any expansion to an existing water system that has a minimum of two years of meter records that clearly demonstrate that a lower design value for MDD may be used without significant risk of pressure loss. The meter records must correlate the demand data to the actual level of occupancy for the periods covered by the records.

(5) The minimum water demand and duration required for fire flow and/or fire suppression storage shall be determined by the local fire control authority, or chapter 246-293 WAC for systems within the boundaries of a designated critical water supply service area (CWSSA). Public water systems that are not required to comply with minimum fire flow standards shall coordinate with the local fire control authorities to ensure that any hydrants on the system, if they can possibly be used in the course of fire suppression activities, do not create adverse pressure problems within the water system as a result of fire control actions.

[Statutory Authority: RCW 70.119A.180. 07-02-025B, § 246-290-221, filed 12/22/06, effective 1/22/07. Statutory Authority: RCW 43.02.050 [43.20.-050]. 99-07-021, § 246-290-221, filed 3/9/99, effective 4/9/99.]

WAC 246-290-222 Water system physical capacity. (1) The water system physical capacity shall be established by evaluating the capacity of each system component such as source, treatment, storage, transmission, or distribution, individually and in combination with each other. The evaluation shall identify any limitations on the ability of the system to provide service to all consumers.

(2) The water system physical capacity shall be:

(a) Reported in terms of total equivalent residential units (ERUs) and the number of residential and nonresidential connections with the number of ERUs they represent; and

(b) Compared to the existing number of residential and nonresidential connections currently served and the ERUs they represent.

(3) Total source capacity calculations shall not include emergency sources as defined in WAC 246-290-010.

(4) Total daily source capacity, in conjunction with any storage that is designed to accommodate peak use periods on a daily or longer basis, shall be sufficient to provide a reliable supply of water equal to or exceeding the MDD.

(5) Treatment capacity, in conjunction with any storage designed to accommodate peak demand periods on a daily or longer basis, shall be sufficient to provide a reliable supply of treated water equal to or exceeding the MDD while meeting the water quality parameters set forth in Part 4 and Part 6 as applicable, of this chapter.

(6) Water storage shall be sufficient to meet expected system service demands by providing sufficient operational, equalizing, standby, and where applicable, fire suppression storage volumes in accordance with WAC 246-290-235.

(7) Distribution system capacity shall provide for PHD, or MDD plus required fire flow, as required in each pressure zone while maintaining minimum design pressures established under this chapter.

[Statutory Authority: RCW 43.02.050 [43.20.050]. 99-07-021, § 246-290-222, filed 3/9/99, effective 4/9/99.]

WAC 246-290-230 Distribution systems. (1) The purveyor shall size and evaluate new, or expansions to existing, distribution systems using a hydraulic analysis acceptable to the department.

(2) The minimum diameter of all distribution mains shall be six inches (150 mm) unless smaller mains can be justified by hydraulic analysis.

(3) Systems designed to provide fire flows shall have a minimum distribution main size of six inches (150 mm).

(4) Installation of new standard fire hydrants shall not be allowed on mains less than six inches (150 mm) in diameter. Existing fire hydrants on currently active mains less than six inches (150 mm) in diameter shall be allowed to remain provided:

(a) The existing distribution system consists of mains at least four inches (101.6 mm) in diameter, and the fire flow available from existing four-inch (101.6 mm) mains within the proximity of the fire hydrant exceeds the minimum fire flow standard adopted by the local fire protection authority; and

(b) The location and installation of the fire hydrants on the four-inch (101.6 mm) main have received approval by the local fire protection authority.

(5) New public water systems or additions to existing systems shall be designed with the capacity to deliver the design PHD quantity of water at 30 psi (210 kPa) under PHD flow conditions measured at all existing and proposed service water meters or along property lines adjacent to mains if no meter exists, and under the condition where all equalizing storage has been depleted.

(6) If fire flow is to be provided, the distribution system shall also provide maximum day demand (MDD) plus the required fire flow at a pressure of at least 20 psi (140 kPa) at all points throughout the distribution system, and under the condition where the designed volume of fire suppression and equalizing storage has been depleted.

(7) Booster pumps shall be designed in accordance with good engineering criteria and practices as listed in WAC 246-290-200.

(8) On existing systems, or for additions to existing systems, that are unable to meet the pressure requirements of this section, booster pumps for individual services may be used in the interim until system improvements are made to resolve pressure deficiencies. In this situation, the individual booster pumps shall be under the management and control of the purveyor.

(9) Transmission lines as defined in WAC 246-290-010 shall be designed to maintain greater than or equal to five psi (35 kPa) during normal operations, except when directly adjacent to storage tanks, and shall be sized according to a hydraulic analysis. Transmission mains designed to operate at velocities greater than ten feet per second shall include a hydraulic transient (water hammer) analysis in conjunction with the hydraulic analysis.

[Statutory Authority: RCW 43.02.050 [43.20.050]. 99-07-021, § 246-290-230, filed 3/9/99, effective 4/9/99. Statutory Authority: RCW 43.20.050. 94-

14-001, § 246-290-230, filed 6/22/94, effective 7/23/94; 93-08-011 (Order 352B), § 246-290-230, filed 3/25/93, effective 4/25/93; 91-02-051 (Order 124B), recodified as § 246-290-230, filed 12/27/90, effective 1/31/91. Statutory Authority: RCW 34.04.045. 88-05-057 (Order 307), § 248-54-135, filed 2/17/88. Statutory Authority: RCW 43.20.050. 83-19-002 (Order 266), § 248-54-135, filed 9/8/83.]

WAC 246-290-235 Finished water storage facilities. (1) Finished water storage facilities shall be designed to:

(a) Prevent entry by birds, animals, insects, excessive dust, and other potential sources of external contamination. The design shall include provisions for a lockable weather-tight roof, a screened roof vent, an overflow pipe with atmospheric discharge or other suitable means to prevent a cross-connection, sample collection capability, a drain to daylight (or an approved alternative that is adequate to protect against cross-connection), a provision for tank isolation in order to perform maintenance procedures, and other appurtenances appropriate to the protection of stored water from contamination;

(b) Maintain water circulation, prevent water stagnation, and provide adequate disinfection contact time; and

(c) Be accessible for routine maintenance and water quality monitoring.

(2) Equalizing storage, as defined in WAC 246-290-010, shall be provided to meet peak periods of demand, either daily or longer, when determined to be necessary based on available, or designed, source pumping capacity.

(3) Operational, standby, and fire suppression storage volumes as defined in WAC 246-290-010 shall be provided, as applicable, for all pressure zones to meet both normal as well as abnormal demands of the system.

(4) Standby and fire suppression storage volumes may be nested with the larger of the two volumes being the minimum available, provided the local fire protection authority does not require them to be additive.

[Statutory Authority: RCW 70.119A.180 and 43.20.050. 08-03-061, § 246-290-235, filed 1/14/08, effective 2/14/08. Statutory Authority: RCW 43.02.-050 [43.20.050]. 99-07-021, § 246-290-235, filed 3/9/99, effective 4/9/99.]

WAC 246-290-250 Treatment design. (1) Treatment systems or devices shall be piloted and designed to ensure finished water quality conforms to water quality standards established in WAC 246-290-310.

(2) Treatment systems or devices for surface water or GWI sources shall be designed in accordance with the provisions of Part 6 of this chapter and the applicable provisions herein.

(3) Predesign studies, including pilot studies as appropriate, shall be required for proposed surface water and GWI sources and those ground water sources requiring treatment. The goal of the predesign study shall be to establish the most effective method, considering economics, to produce satisfactory finished water quality meeting the requirements of this chapter and complying with the treatment technique requirements in Part 6 of chapter 246-290 WAC. The predesign study shall be included as part of the project report under WAC 246-290-110. Refer to WAC 246-290-676 for requirements relating specifically to the filtration facility pilot study. The purveyor shall not establish nor maintain a bypass to divert water around any feature of a treatment process, except by written permission of the department.

(4) All well and spring sources not determined to be GWI's shall have continuous disinfection that meets the operational requirements of WAC 246-290-451 (3) and (4). The department may modify the requirement for disinfection for public water systems that demonstrate the well or spring sources (not confirmed as GWI's) have satisfactory bacteriological histories at the source and have SCAs in accordance with WAC 246-290-135.

(5) Purveyors shall use appropriate treatment technologies, such as those outlined in department guidance on water treatment, and shall address water treatment facilities in their water system plans pursuant to WAC 246-290-100.

(6) Project reports for the design of treatment facilities shall meet the requirements of WAC 246-290-110.

(7) Construction specifications for treatment facilities shall meet the requirements of WAC 246-290-120.

[Statutory Authority: RCW 43.02.050 [43.20.050]. 99-07-021, § 246-290-250, filed 3/9/99, effective 4/9/99. Statutory Authority: RCW 43.20.050. 93-08-011 (Order 352B), § 246-290-250, filed 3/25/93, effective 4/25/93; 91-02-051 (Order 124B), recodified as § 246-290-250, filed 12/27/90, effective 1/31/91. Statutory Authority: RCW 34.04.045. 88-05-057 (Order 307), § 248-54-155, filed 2/17/88. Statutory Authority: RCW 43.20.050. 83-19-002 (Order 266), § 248-54-155, filed 9/8/83.]

PART 4.
WATER QUALITY

WAC 246-290-300 Monitoring requirements. (1) General.

(a) The monitoring requirements specified in this section are minimums. The department may require additional monitoring when:

(i) Contamination is present or suspected in the water system;

(ii) A ground water source is determined to be a potential GWI;

(iii) The degree of source protection is not satisfactory;

(iv) Additional monitoring is needed to verify source vulnerability for a requested monitoring waiver;

(v) Under other circumstances as identified in a department order; or

(vi) Additional monitoring is needed to evaluate continuing effectiveness of a treatment process where problems with the treatment process may exist.

(b) Special purpose samples collected by the purveyor shall not count toward fulfillment of the monitoring requirements of this chapter unless the quality of data and method of sampling and analysis are acceptable to the department.

(c) The purveyor shall ensure samples required by this chapter are collected, transported, and submitted for analysis according to EPA-approved methods. The analyses shall be performed by a laboratory accredited by the state. Qualified water utility, accredited laboratory, health department personnel, and other parties approved by the department may conduct measurements for pH, temperature, residual disinfectant concentration, alkalinity, bromide, chlorite, TOC, SUVA, and turbidity as required by this chapter, provided, these measurements are made in accordance with EPA approved methods.

(d) Compliance samples required by this chapter shall be taken at locations listed in Table 3 of this section.

(e) Purveyors failing to comply with a monitoring requirement shall notify:

(i) The department under WAC 246-290-480; and

(ii) The owner or operator of any consecutive system served and the appropriate water system users under 40 CFR 141.201 and Part 7, Subpart A of this chapter.

(2) Selling and receiving water.

(a) Source monitoring. Purveyors, with the exception of those that "wheel" water to their consumers (i.e., sell water that has passed through another purchasing purveyor's distribution system), shall conduct source monitoring under this chapter for the sources under their control. The level of monitoring shall satisfy the monitoring requirements associated with the total population served by the source.

(b) Distribution system monitoring. The purveyor of a system that receives and distributes water shall perform distribution-related monitoring requirements. Monitoring shall include, but not be limited to, the following:

(i) Collect coliform samples under subsection (3) of this section;

(ii) Collect disinfection by-product samples if required by this section;

(iii) Perform the distribution system residual disinfectant concentration monitoring under subsection (7) of this section, and as required under WAC 246-290-451 or 246-290-694;

(iv) Perform lead and copper monitoring required under 40 CFR 141.86, 141.87, and 141.88;

(v) Perform the distribution system monitoring under 40 CFR 141.23(b) for asbestos if applicable;

(vi) Other monitoring as required by the department.

(c) Reduced monitoring for regional programs. The receiving purveyor may receive reductions in the coliform, lead and copper, disinfection by-product (including THMs) and distribution system disinfectant residual concentration monitoring requirements, provided the receiving system:

(i) Purchases water from a purveyor that has a department-approved regional monitoring program; and

(ii) Has a written agreement with the supplying system or regional water supplier that is acceptable to the department, and which identifies the responsibilities of both the supplying and receiving system(s) with regards to monitoring, reporting and maintenance of the distribution system.

(d) Periodic review of regional programs. The department may periodically review the sampling records of public water systems participating in a department-approved monitoring program to determine if continued reduced monitoring is appropriate. If the department determines a change in the monitoring requirements of the receiving system is appropriate:

(i) The department shall notify the purveyor of the change in monitoring requirements; and

(ii) The purveyor shall conduct monitoring as directed by the department.

(3) Bacteriological.

(a) The purveyor shall be responsible for collection and submittal of coliform samples from representative points throughout the distribution system. Samples shall be collected after the first service and at regular time intervals each month the system provides water to consumers. Samples shall be collected that represent normal system operating conditions.

(i) Systems providing disinfection treatment shall, when taking a routine or repeat sample, measure residual disinfectant concentration within the distribution system at the same time and location and comply with the residual disinfection monitoring requirements under WAC 246-290-451.

(ii) Systems providing disinfection treatment shall assure that disinfectant residual concentrations are measured and recorded on all coliform sample report forms submitted for compliance purposes.

(b) Coliform monitoring plan.

(i) The purveyor shall prepare a written coliform monitoring plan and base routine monitoring upon the plan. The plan shall include coliform sample collection sites and a sampling schedule.

(ii) The purveyor shall:

(A) Keep the coliform monitoring plan on file with the system and make it available to the department for inspection upon request;

(B) Revise or expand the plan at any time the plan no longer ensures representative monitoring of the system, or as directed by the department; and

(C) Submit the plan to the department for review and approval when requested and as part of the water system plan required under WAC 246-290-100.

(c) Monitoring frequency. The number of required routine coliform samples is based on total population served.

(i) Purveyors of **community** systems shall collect and submit for analysis no less than the number of routine samples listed in Table 2 during each calendar month of operation;

(ii) Unless directed otherwise by the department, purveyors of **noncommunity** systems shall collect and submit for analysis no less than the number of samples required in Table 2, and no less than required under 40 CFR 141.21. Each month's population shall be based on the average daily population and shall include all residents and nonresidents served during that month. During months when the average daily population served is less than twenty-five, routine sample collection is not required when:

(A) Using only protected ground water sources;

(B) No coliform were detected in samples during the previous month; and

(C) One routine sample has been collected and submitted for analysis during one of the previous two months.

(iii) Purveyors of systems serving both a resident and a nonresident population shall base their minimum sampling requirement on the total of monthly populations served, both resident and nonresident as determined by the department, but no less than the minimum required in Table 2; and

(iv) Purveyors of systems with a nonresident population lasting two weeks or less during a month shall sample as directed by the department. Sampling shall be initiated at least two weeks prior to the time service is provided to consumers.

(v) Purveyors of TNC systems shall not be required to collect routine samples in months where the population served is zero or the system has notified the department of an unscheduled closure.

(d) Invalid samples. When a coliform sample is determined invalid under WAC 246-290-320 (2)(d), the purveyor shall:

(i) Not include the sample in the determination of monitoring compliance; and

(ii) Take follow-up action as defined in WAC 246-290-320 (2)(d).

(e) The purveyor using a surface water or GWI source shall collect representative source water samples for bacteriological density analysis under WAC 246-290-664 and 246-290-694 as applicable.

TABLE 2
MINIMUM MONTHLY ROUTINE COLIFORM SAMPLING REQUIREMENTS

Population Served [1] During Month	Minimum Number of Routine Samples/Calendar Month: When NO samples with a coliform presence were collected during the previous month	When ANY samples with a coliform presence were collected during the previous month
1 - 1,000	1*	5
1,001 - 2,500	2*	5
2,501 - 3,300	3*	5
3,301 - 4,100	4*	5
4,101 - 4,900	5	5
4,901 - 5,800	6	6
5,801 - 6,700	7	7
6,701 - 7,600	8	8
7,601 - 8,500	9	9
8,501 - 12,900	10	10
12,901 - 17,200	15	15
17,201 - 21,500	20	20
21,501 - 25,000	25	25
25,001 - 33,000	30	30
33,001 - 41,000	40	40
41,001 - 50,000	50	50
50,001 - 59,000	60	60
59,001 - 70,000	70	70
70,001 - 83,000	80	80
83,001 - 96,000	90	90
96,001 - 130,000	100	100
130,001 - 220,000	120	120
220,001 - 320,000	150	150
320,001 - 450,000	180	180
450,001 - 600,000	210	210
600,001 - 780,000	240	240
780,001 - 970,000	270	270
970,001 - 1,230,000[3]	300	300

[1] Does not include the population of a consecutive system that purchases water. The sampling requirement for consecutive systems is a separate determination based upon the population of that system.

[2] Noncommunity systems using only protected ground water sources and serving less than 25 individuals, may collect and submit for analysis, one sample every three months.

[3] Systems serving populations larger than 1,230,000 shall contact the department for the minimum number of samples required per month.

*In addition to the provisions of subsection (1)(a) of this section, if a system of this size cannot show evidence of having been subject to a sanitary survey on file with the department, or has been determined to be at risk to bacteriological concerns following a survey, the minimum number of samples required per month may be increased by the department after additional consideration of factors such as monitoring history, compliance record, operational problems, and water quality concerns for the system.

(4) Inorganic chemical and physical.

(a) A complete inorganic chemical and physical analysis shall consist of the primary and secondary chemical and physical substances.

(i) Primary chemical and physical substances are antimony, arsenic, asbestos, barium, beryllium, cadmium, chromium, cyanide, fluoride, mercury, nickel, nitrate (as N), nitrite (as N), selenium, sodium, thallium, and for unfiltered surface water, turbidity. (Except that the MCL for arsenic under WAC 246-290-310 does not apply to TNC systems.)

(ii) Secondary chemical and physical substances are chloride, color, hardness, iron, manganese, specific conductivity, silver, sulfate, total dissolved solids*, and zinc.

* Required only when specific conductivity exceeds seven hundred micromhos/centimeter.

(b) Purveyors shall monitor for all primary and secondary chemical and physical substances identified in Table 4 and Table 5. Samples shall be collected in accordance with the monitoring requirements referenced in 40 CFR 141.23 introductory text, 141.23(a) through 141.23(j), excluding (i)(2), and 40 CFR 143.4, except for composite samples for systems serving less than three thousand three hundred one persons. For these systems, compositing among different systems may be allowed if the systems are owned or operated by a department-approved satellite management agency.

(c) Samples required by this subsection shall be taken at designated locations under 40 CFR 141.23(a) through 141.23(j), excluding (i)(2), and 40 CFR 143.4, and Table 3 herein.

(i) Wellfield samples shall be allowed from department designated wellfields; and

(ii) Under 40 CFR 141.23 (a)(3), alternate sampling locations may be used if approved by the department. The process for determining these alternate sites is described in department guidance. Purveyors of community and NTNC systems may ask the department to approve an alternate sampling location for multiple sources within a single system that are blended prior to entry to the distribution system. Alternate sampling plans shall address the following:

(A) Source vulnerability;

(B) Individual source characteristics;

(C) Previous water quality information;

(D) Status of monitoring waiver applications; and

(E) Other information deemed necessary by the department.

(d) Composite samples:

(i) Under 40 CFR 141.23 (a)(4), purveyors may ask the certified lab to composite samples representing as many as five individual samples from within one system. Sampling procedures and protocols are outlined in department guidance; and

(ii) For systems serving a population of less than three thousand three hundred one, the department may approve composite sampling between systems when those systems are part of an approved satellite management agency.

(e) When the purveyor provides treatment for one or more inorganic chemical or physical contaminants, the department may require the purveyor to sample before and

after treatment. The department shall notify the purveyor if and when this additional source sampling is required.

(f) Inorganic monitoring plans.

(i) Purveyors of community and NTNC systems shall prepare an inorganic chemical monitoring plan and base routine monitoring on the plan.

(ii) The purveyor shall:

(A) Keep the monitoring plan on file with the system and make it available to the department for inspection upon request;

(B) Revise or expand the plan at any time the plan no longer reflects the monitoring requirements, procedures or sampling locations, or as directed by the department; and

(C) Submit the plan to the department for review and approval when requested and as part of the water system plan required under WAC 246-290-100.

(g) Monitoring waivers.

(i) Purveyors may request in writing, a monitoring waiver from the department for any nonnitrate/nitrite inorganic chemical and physical monitoring requirements identified in this chapter.

(ii) Purveyors requesting a monitoring waiver shall comply with applicable subsections of 40 CFR 141.23 (b)(3), and 141.23 (c)(3).

(iii) Purveyors shall update and resubmit requests for waiver renewals as applicable during each compliance cycle or period or more frequently as directed by the department.

(iv) Failure to provide complete and accurate information in the waiver application shall be grounds for denial of the monitoring waiver.

(h) The department may require the purveyor to repeat sample for confirmation of results.

(i) Purveyors with emergency and seasonal sources shall monitor those sources when they are in use.

(5) Lead and copper. Monitoring for lead and copper shall be conducted in accordance with 40 CFR 141.86 (a) - (f), 141.87, and 141.88.

(6) Disinfection by-products (DBP), disinfectant residuals, and disinfection by-product precursors (DBPP). Purveyors of community and NTNC systems providing water treated with chemical disinfectants and TNC systems using chlorine dioxide shall monitor as follows:

(a) General requirements.

(i) Systems shall collect samples during normal operating conditions.

(ii) All monitoring shall be conducted in accordance with the analytical requirements in 40 CFR 141.131.

(iii) Systems may consider multiple wells drawing from a single aquifer as one treatment plant for determining the minimum number of TTHM and HAA5 samples required, with department approval in accordance with department guidance.

(iv) Systems required to monitor under this subsection shall prepare and implement a monitoring plan in accordance with 40 CFR 141.132(f).

(A) Community and NTNC surface water systems that add a chemical disinfectant and serve at least ten thousand people shall submit a monitoring plan to the department.

(B) Community and NTNC surface water systems that add a chemical disinfectant and serve less than ten thousand people, but more than three thousand three hundred people, shall submit a monitoring plan to the department.

(C) The department may require submittal of a monitoring plan from systems not specified in subsection (6)(a)(iv)(A) or (B) of this section, and may require revision of any monitoring plan.

(D) Failure to monitor will be treated as a violation for the entire period covered by the annual average where compliance is based on a running annual average of monthly or quarterly samples or averages and the systems' failure to monitor makes it impossible to determine compliance with MCL's or MRDL's.

(b) Disinfection by-products - **Community** and **NTNC** systems only.

(i) TTHMs and HAA5.

(A) Systems shall monitor for TTHMs and HAA5 in accordance with 40 CFR 141.132 (b)(1)(i).

(B) With department approval, systems may reduce monitoring in accordance with 40 CFR 141.132 (b)(1)(ii).

(C) Systems on department-approved reduced monitoring schedules may be required to return to routine monitoring, or initiate increased monitoring in accordance with 40 CFR 141.132 (b)(1)(iii).

(D) The department may return systems on increased monitoring to routine monitoring if, after one year, annual average results for TTHMs and HAA5 are less than or equal to 0.060 mg/L and 0.045 mg/L, respectively, or monitoring results are consistently below the MCLs indicating that increased monitoring is no longer necessary.

(ii) Chlorite - Only systems that use **chlorine dioxide.**

(A) Systems using chlorine dioxide shall conduct daily and monthly monitoring in accordance with 40 CFR 141.132 (b)(2)(i) and additional chlorite monitoring in accordance with 40 CFR 141.132 (b)(2)(ii).

(B) With department approval, monthly monitoring may be reduced in accordance with 40 CFR 141.132 (b)(2)(iii)(B). Daily monitoring at entry to distribution required by 40 CFR 141.132 (b)(2)(i)(A) may not be reduced.

(iii) Bromate - Only systems that use **ozone.**

(A) Systems using ozone for disinfection or oxidation must conduct bromate monitoring in accordance with 40 CFR 141.132 (b)(3)(i).

(B) With department approval, monthly bromate monitoring may be reduced to once per quarter in accordance with 40 CFR 141.132 (b)(3)(ii) and 40 CFR 141.132(e).

(c) Disinfectant residuals.

(i) Chlorine and chloramines. Systems that use chlorine or chloramines shall monitor and record the residual disinfectant level in the distribution system under WAC 246-290-451(6), 246-290-664 (6)(a), or 246-290-694 (8)(a).

(ii) Chlorine dioxide. Community, NTNC, or TNC systems that use chlorine dioxide shall monitor in accordance with 40 CFR 141.132 (c)(2) and record results.

(d) Disinfection by-product precursors.

Surface water systems that use conventional filtration with sedimentation shall monitor under 40 CFR 141.132(d), and meet the requirements of 40 CFR 141.135.

(7) Organic chemicals.

(a) Purveyors of community and NTNC water systems shall comply with monitoring requirements under 40 CFR 141.24 (a) - (d), 141.24 (f)(1) - (f)(15), 141.24 (f)(18) - (19),

141.24 (f)(21), 141.24 (g)(1) - (9), 141.24 (g)(12) - (14), 141.24 (h)(1) - (11), and 141.24 (h)(14) - (17).

(b) Sampling locations shall be as defined in 40 CFR 141.24(f), 141.24(g), 141.24(h), and 141.40(b).

(i) Wellfield samples shall be allowed from department designated wellfields; and

(ii) Under 40 CFR 141.24 (f)(3) and 141.24 (h)(3), alternate sampling locations may be allowed if approved by the department. These alternate locations are described in department guidance. Purveyors may ask the department to approve an alternate sampling location for multiple sources within a single system that are blended prior to entry to the distribution system. The alternate sampling location shall consider the following:

(A) Source vulnerability;

(B) An updated organic monitoring plan showing location of all sources with current and proposed sampling locations;

(C) Individual source characteristics;

(D) Previous water quality information;

(E) Status of monitoring waiver applications; and

(F) Other information deemed necessary by the department.

(c) Composite samples:

(i) Purveyors may ask the certified lab to composite samples representing as many as five individual samples from within one system. Sampling procedures and protocols are outlined in department guidance;

(ii) For systems serving a population of less than three thousand three hundred one, the department may approve composite sampling between systems when those systems are part of an approved satellite management agency.

(d) The department may require the purveyor to sample both before and after treatment for one or more organic contaminants. The department shall notify the purveyor if and when this additional source sampling is required.

(e) Organic chemical monitoring plans.

(i) Purveyors of community and NTNC systems shall prepare an organic chemical monitoring plan and base routine monitoring on the plan.

(ii) The purveyor shall:

(A) Keep the monitoring plan on file with the system and make it available to the department for inspection upon request;

(B) Revise or expand the plan at any time the plan no longer reflects the monitoring requirements, procedures or sampling locations, or as directed by the department; and

(C) Submit the plan to the department for review and approval when requested and as part of the water system plan required under WAC 246-290-100.

(f) Monitoring waivers.

(i) Purveyors may request in writing, a monitoring waiver from the department for any organic monitoring requirement except those relating to unregulated VOCs;

(ii) Purveyors requesting a monitoring waiver shall comply with 40 CFR 141.24 (f)(7), 141.24 (f)(10), 141.24 (h)(6), and 141.24 (h)(7);

(iii) Purveyors shall update and resubmit requests for waiver renewals as directed by the department; and

(iv) Failure to provide complete and accurate information in the waiver application shall be grounds for denial of the monitoring waiver.

(g) Purveyors with emergency and seasonal sources shall monitor those sources under the applicable requirements of this section when they are actively providing water to consumers.

(8) Radionuclides. Monitoring for radionuclides shall be conducted under 40 CFR 141.26.

(9) *Cryptosporidium* and *E. coli* source monitoring. Purveyors with surface water or GWI sources shall monitor the sources in accordance with 40 CFR 141.701 and 702.

(10) Other substances.

On the basis of public health concerns, the department may require the purveyor to monitor for additional substances.

TABLE 3
MONITORING LOCATION

Sample Type	Sample Location
Asbestos	One sample from distribution system or if required by department, from the source.
Bacteriological	From representative points throughout distribution system.
Cryptosporidium and *E. coli* (Source Water) - WAC 246-290-630(16)	Under 40 CFR 141.703.
Complete Inorganic Chemical & Physical	From a point representative of the source, after treatment, and prior to entry to the distribution system.
Lead/Copper	From the distribution system at targeted sample tap locations.
Nitrate/Nitrite	From a point representative of the source, after treatment, and prior to entry to the distribution system.
Disinfection By-Products - TTHMs and HAA5 - WAC 246-290-300(6)	Under 40 CFR 141.132 (b)(1).
Disinfection By-Products - Chlorite (Systems adding chlorine dioxide)	Under 40 CFR 141.132 (b)(2).
Disinfection By-Products - Bromate (Systems adding ozone)	Under 40 CFR 141.132 (b)(3).
Disinfectant Residuals - Chlorine and Chloramines	Under 40 CFR 141.132 (c)(1).
Disinfectant Residuals - Chlorine dioxide	Under 40 CFR 141.132 (c)(2).
Disinfection Precursors - Total Organic Carbon (TOC)	Under 40 CFR 141.132(d).
Disinfection Precursors - Bromide (Systems using ozone)	From the source before treatment.
Radionuclides	From a point representative of the source, after treatment and prior to entry to distribution system.
Organic Chemicals (VOCs & SOCs)	From a point representative of the source, after treatment and prior to entry to distribution system.
Other Substances (unregulated chemicals)	From a point representative of the source, after treatment, and prior to entry to the distribution system, or as directed by the department.

[Statutory Authority: RCW 70.119A.180 and 43.20.050. 08-03-061, § 246-290-300, filed 1/14/08, effective 2/14/08. Statutory Authority: RCW 43.20.-050 and 70.119A.080. 04-04-056, § 246-290-300, filed 1/30/04, effective 3/1/04. Statutory Authority: RCW 43.20.050 (2) and (3) and 70.119A.080. 03-08-037, § 246-290-300, filed 3/27/03, effective 4/27/03. Statutory Authority: RCW 43.02.050 [43.20.050]. 99-07-021, § 246-290-300, filed 3/9/99, effective 4/9/99. Statutory Authority: RCW 43.20.050. 94-14-001, § 246-290-300, filed 6/22/94, effective 7/23/94; 93-08-011 (Order 352B), § 246-290-300, filed 3/25/93, effective 4/25/93; 92-04-070 (Order 241B), § 246-290-300, filed 2/4/92, effective 3/6/92. Statutory Authority: Chapter 43.20 RCW. 91-07-031 (Order 150B), § 246-290-300, filed 3/15/91, effective 4/15/91. Statutory Authority: RCW 43.20.050. 91-02-051 (Order 124B), recodified as § 246-290-300, filed 12/27/90, effective 1/31/91. Statutory Authority: P.L. 99-339. 89-21-020 (Order 336), § 248-54-165, filed 10/10/89, effective 11/10/89. Statutory Authority: RCW 34.04.045. 88-05-057 (Order 307), § 248-54-165, filed 2/17/88. Statutory Authority: RCW 43.20.050. 83-19-002 (Order 266), § 248-54-165, filed 9/8/83.]

WAC 246-290-310 Maximum contaminant levels (MCLs) and maximum residual disinfectant levels (MRDLs). (1) General.

(a) The purveyor shall be responsible for complying with the standards of water quality identified in this section. If a substance exceeds its MCL or its maximum residual disinfectant level (MRDL), the purveyor shall take follow-up action under WAC 246-290-320.

(b) When enforcing the standards described under this section, the department shall enforce compliance with the primary standards as its first priority.

(2) Bacteriological.

(a) MCLs under this subsection shall be considered primary standards.

(b) If coliform presence is detected in any sample, the purveyor shall take follow-up action under WAC 246-290-320(2).

(c) Acute MCL. An acute MCL for coliform bacteria occurs when there is:

(i) Fecal coliform presence in a repeat sample;

(ii) *E. coli* presence in a repeat sample; or

(iii) Coliform presence in any repeat samples collected as a follow-up to a sample with fecal coliform or *E. coli* presence.

Note: For the purposes of the public notification requirements in Part 7, Subpart A of this chapter, an acute MCL is a violation that requires Tier 1 public notification.

(d) Nonacute MCL. A nonacute MCL for coliform bacteria occurs when:

(i) Systems taking less than forty routine samples during the month have more than one sample with coliform presence; or

(ii) Systems taking forty or more routine samples during the month have more than 5.0 percent with coliform presence.

(e) MCL compliance. The purveyor shall determine compliance with the coliform MCL for each month the system provides drinking water to the public. In determining MCL compliance, the purveyor shall:

(i) Include:

(A) Routine samples; and

(B) Repeat samples.

(ii) Not include:

(A) Samples invalidated under WAC 246-290-320 (2)(d); and

(B) Special purpose samples.

(3) Inorganic chemical and physical.

(a) The primary and secondary MCLs are listed in Table 4 and 5:

TABLE 4
INORGANIC CHEMICAL CHARACTERISTICS

Substance	Primary MCLs (mg/L)
Antimony (Sb)	0.006
Arsenic (As)	0.010*
Asbestos	7 million fibers/liter (longer than 10 microns)
Barium (Ba)	2.0
Beryllium (Be)	0.004
Cadmium (Cd)	0.005
Chromium (Cr)	0.1
Copper (Cu)	**
Cyanide (HCN)	0.2
Fluoride (F)	4.0
Lead (Pb)	**
Mercury (Hg)	0.002
Nickel (Ni)	0.1
Nitrate (as N)	10.0
Nitrite (as N)	1.0
Selenium (Se)	0.05
Sodium (Na)	**
Thallium (Tl)	0.002
Substance	**Secondary MCLs (mg/L)**
Chloride (Cl)	250.0
Fluoride (F)	2.0
Iron (Fe)	0.3
Manganese (Mn)	0.05
Silver (Ag)	0.1
Sulfate (SO_4)	250.0
Zinc (Zn)	5.0

Note* Does not apply to TNC systems.

Note** Although the state board of health has not established MCLs for copper, lead, and sodium, there is sufficient public health significance connected with copper, lead, and sodium levels to require inclusion in inorganic chemical and physical source monitoring. For lead and copper, the EPA has established distribution system related levels at which a system is required to consider corrosion control. These levels, called "action levels," are 0.015 mg/L for lead and 1.3 mg/L for copper and are applied to the highest concentration in ten percent of all samples collected from the distribution system. The EPA has also established a recommended level of twenty mg/L for sodium as a level of concern for those consumers that may be restricted for daily sodium intake in their diets.

TABLE 5
PHYSICAL CHARACTERISTICS

Substance	Secondary MCLs
Color	15 Color Units
Specific Conductivity	700 umhos/cm
Total Dissolved Solids (TDS)	500 mg/L

(b) Compliance with the MCLs, except for nitrate and nitrite, in this subsection is determined by a running annual average at each sampling point. The system will not be considered in violation of the MCL until it has completed one year of quarterly sampling and at least one sampling point is in violation of the MCL. If one sampling point is in violation of the MCL, the system is in violation of the MCL.

(i) If any sample will cause the running annual average to exceed the MCL at any sampling point, the system is out of compliance with the MCL immediately.

(ii) If a system fails to collect the required number of samples, compliance will be based on the total number of samples collected.

(iii) If a sample result is less than the detection limit, zero will be used to calculate the running annual average.

(c) Compliance with the MCLs for nitrate and nitrite is determined based on one sample if the levels of these contaminants are below the MCLs as determined under Table 4 of this section. If the levels of nitrate or nitrite exceed the MCLs in the initial sample, a confirmation sample is required under 40 CFR 141.23 (f)(2), and compliance shall be determined based on the average of the initial and confirmation samples.

(4) Disinfection by-products.

(a) The department shall consider standards under this subsection as primary standards. The MCLs in this subsection apply to monitoring required by WAC 246-290-300(6).

(b) The MCLs for disinfection by-products are as follows:

Disinfection By-Product	MCL (mg/L)
Total Trihalomethanes (TTHMs)	0.080
Haloacetic acids (five) (HAA5)	0.060
Bromate	0.010
Chlorite	1.0

(c) Whether a system has exceeded MCLs shall be determined in accordance with 40 CFR 141.133.

(5) Disinfectant residuals.

(a) The department shall consider standards under this subsection primary standards. The MRDLs in this subsection apply to monitoring required by WAC 246-290-300(6).

(b) The MRDL for disinfectants is as follows:

Disinfectant Residual	MRDL (mg/L)
Chlorine	4.0 (as $C1_2$)
Chloramines	4.0 (as $C1_2$)
Chlorine Dioxide	0.8 (as $C1O_2$)

(c) Whether a system has exceeded MRDLs shall be determined in accordance with 40 CFR 141.133.

(6) Radionuclides.

(a) The department shall consider standards under this subsection primary standards.

(b) The MCLs for radium-226 and radium-228, gross alpha particle activity, beta particle and photon radioactivity, and uranium shall be as listed in 40 CFR 141.66.

(7) Organic chemicals.

(a) The department shall consider standards under this subsection primary standards.

(b) VOCs.

(i) The MCLs for VOCs shall be as listed in 40 CFR 141.61(a).

(ii) The department shall determine compliance with this subsection based on compliance with 40 CFR 141.24(f).

(c) SOCs.

(i) MCLs for SOCs shall be as listed in 40 CFR 141.61(c).

(ii) The department shall determine compliance with this subsection based on compliance with 40 CFR 141.24(h).

(8) Other chemicals.

(a) The state board of health shall determine maximum contaminant levels for any additional substances.

(b) Purveyors may be directed by the department to comply with state advisory levels (SALs) for contaminants that do not have a MCL established in chapter 246-290 WAC. SALs shall be:

(i) MCLs that have been promulgated by the EPA, but which have not yet been adopted by the state board of health; or

(ii) State board of health adopted levels for substances recommended by the department and not having an EPA established MCL. A listing of these may be found in the department document titled *Procedures and References for the Determination of State Advisory Levels for Drinking Water Contaminants* dated June 1996, that has been approved by the state board of health and is available.

[Statutory Authority: RCW 70.119A.180 and 43.20.050. 08-03-061, § 246-290-310, filed 1/14/08, effective 2/14/08. Statutory Authority: RCW 43.20.-050 and 70.119A.080. 04-04-056, § 246-290-310, filed 1/30/04, effective 3/1/04. Statutory Authority: RCW 43.20.050 (2) and (3) and 70.119A.080. 03-08-037, § 246-290-310, filed 3/27/03, effective 4/27/03. Statutory Authority: RCW 43.02.050 [43.20.050]. 99-07-021, § 246-290-310, filed 3/9/99, effective 4/9/99. Statutory Authority: RCW 43.20.050. 94-14-001, § 246-290-310, filed 6/22/94, effective 7/23/94; 93-08-011 (Order 352B), § 246-290-310, filed 3/25/93, effective 4/25/93; 92-04-070 (Order 241B), § 246-290-310, filed 2/4/92, effective 3/6/92. Statutory Authority: Chapter 43.20 RCW. 91-07-031 (Order 150B), § 246-290-310, filed 3/15/91, effective 4/15/91. Statutory Authority: RCW 43.20.050. 91-02-051 (Order 124B), recodified as § 246-290-310, filed 12/27/90, effective 1/31/91. Statutory Authority: P.L. 99-339. 89-21-020 (Order 336), § 248-54-175, filed 10/10/89, effective 11/10/89. Statutory Authority: RCW 34.04.045. 88-05-057 (Order 307), § 248-54-175, filed 2/17/88. Statutory Authority: RCW 43.20.050. 83-19-002 (Order 266), § 248-54-175, filed 9/8/83.]

WAC 246-290-320 Follow-up action. (1) General.

(a) When an MCL or MRDL violation or exceedance occurs, the purveyor shall take follow-up action as described in this section.

(b) When a primary standard violation occurs, the purveyor shall:

(i) Notify the department under WAC 246-290-480;

(ii) Notify the consumers served by the system and the owner or operator of any consecutive system served in accordance with 40 CFR 141.201 through 208, and Part 7, Subpart A of this chapter;

(iii) Determine the cause of the contamination; and

(iv) Take action as directed by the department.

(c) When a secondary standard violation occurs, the purveyor shall notify the department and take action as directed by the department.

(d) The department may require additional sampling for confirmation of results.

(2) Bacteriological.

(a) When coliform bacteria are present in any sample and the sample is not invalidated under (d) of this subsection, the purveyor shall ensure the following actions are taken:

(i) The sample is analyzed for fecal coliform or *E. coli*. When a sample with a coliform presence is not analyzed for *E. coli* or fecal coliforms, the sample shall be considered as

having a fecal coliform presence for MCL compliance purposes;

(ii) Repeat samples are collected in accordance with (b) of this subsection;

(iii) The department is notified in accordance with WAC 246-290-480; and

(iv) The cause of the coliform presence is determined and corrected.

(b) Repeat samples.

(i) The purveyor shall collect repeat samples in order to confirm the original sample results and to determine the cause of the coliform presence. Additional treatment, such as batch or shock chlorination, shall not be instituted prior to the collection of repeat samples unless prior authorization by the department is given. Following collection of repeat samples, and before the analytical results are known, there may be a need to provide interim precautionary treatment or other means to insure public health protection. The purveyor shall contact the department to determine the best interim approach in this situation.

(ii) The purveyor shall collect and submit for analysis a set of repeat samples for every sample in which the presence of coliforms is detected. A set of repeat coliform samples consists of:

(A) Four repeat samples for systems collecting one routine coliform sample each month; or

(B) Three repeat samples for all systems collecting more than one routine coliform sample each month.

(iii) The purveyor shall collect repeat sample sets according to Table 7;

(iv) The purveyor shall collect one set of repeat samples for each sample with a coliform presence. All samples in a set of repeat samples shall be collected on the same day and submitted for analysis within twenty-four hours after notification by the laboratory of a coliform presence, or as directed by the department.

(v) When repeat samples have coliform presence, the purveyor shall:

(A) Contact the department and collect a minimum of one additional set of repeat samples as directed by the department; or

(B) Collect one additional set of repeat samples for each sample where coliform presence was detected.

(vi) The purveyor of a system providing water to consumers via a single service shall collect repeat samples from the same location as the sample with a coliform presence. The set of repeat samples shall be collected:

(A) On the same collection date;

(B) Over consecutive days with one sample collected each day until the required samples in the set of repeat samples are collected; or

(C) As directed by the department.

(vii) If a sample with a coliform presence was collected from the first two or last two active services, the purveyor shall monitor as directed by the department;

(viii) The purveyor may change a previously submitted routine sample to a sample in a set of repeat samples when the purveyor:

(A) Collects the sample within five adjacent service connections of the location from which the initial sample with a coliform presence was collected;

(B) Collects the sample after the initial sample with a coliform presence was submitted for analysis;

(C) Collects the sample on the same day as other samples in the set of repeat samples, except under (b)(iv) of this subsection; and

(D) Requests and receives approval from the department for the change.

(ix) The department may determine that sets of repeat samples specified under this subsection are not necessary during a month when a nonacute coliform MCL violation is determined for the system.

Table 7
REPEAT SAMPLE REQUIREMENTS

# OF ROUTINE SAMPLES COLLECTED EACH MONTH	# OF SAMPLES IN A SET OF REPEAT SAMPLES	LOCATIONS FOR REPEAT SAMPLES (COLLECT AT LEAST ONE SAMPLE PER SITE)
1	4	♦ Site of previous sample with a coliform presence ♦ Within 5 active services upstream of site of sample with a coliform presence ♦ Within 5 active services downstream of site of sample with a coliform presence ♦ At any other active service or from a location most susceptible to contamination (i.e., well or reservoir)
more than 1	3	♦ Site of previous sample with a coliform presence ♦ Within 5 active services upstream of site of sample with a coliform presence ♦ Within 5 active services downstream of site of sample with a coliform presence

(c) Monitoring frequency following a coliform presence. Systems having one or more coliform presence samples that were not invalidated during the previous month shall collect and submit for analysis the minimum number of samples shown in the last column of Table 2.

(i) The purveyor may obtain a reduction in the monitoring frequency requirement when one or more samples with a coliform presence were collected during the previous month, if the purveyor proves to the satisfaction of the department;

(A) The cause of the sample with a coliform presence; and

(B) The problem is corrected before the end of the next month the system provides water to the public.

(ii) If the monitoring frequency requirement is reduced, the purveyor shall collect and submit at least the minimum number of samples required when no samples with a coliform presence were collected during the previous month.

(d) Invalid samples. Coliform samples may be determined to be invalid under any of the following conditions:

(i) A certified laboratory determines that the sample results show:

(A) Multiple tube technique cultures that are turbid without appropriate gas production;

(B) Presence-absence technique cultures that are turbid in the absence of an acid reaction;

(C) Occurrence of confluent growth patterns or growth of TNTC (too numerous to count) colonies without a surface sheen using a membrane filter analytic technique;

(ii) The analyzing laboratory determines there is excess debris in the sample.

(iii) The analyzing laboratory establishes that improper sample collection or analysis occurred;

(iv) The department determines that a nondistribution system problem has occurred as indicated by:

(A) All samples in the set of repeat samples collected at the same location, including households, as the original coliform presence sample also are coliform presence; and

(B) All other samples from different locations (households, etc.) in the set of repeat samples are free of coliform.

(v) The department determines a coliform presence result is due to a circumstance or condition that does not reflect water quality in the distribution system.

(e) Follow-up action when an invalid sample is determined. The purveyor shall take the following action when a coliform sample is determined to be invalid:

(i) Collect and submit for analysis an additional coliform sample from the same location as each invalid sample within twenty-four hours of notification of the invalid sample; or

(ii) In the event that it is determined that the invalid sample resulted from circumstances or conditions not reflective of distribution system water quality, collect a set of samples in accordance with Table 7; and

(iii) Collect and submit for analysis samples as directed by the department.

(f) Invalidated samples shall not be included in determination of the sample collection requirement for compliance with this chapter.

(3) Inorganic chemical and physical follow-up monitoring shall be conducted in accordance with the following:

(a) For nonnitrate/nitrite primary inorganic chemicals, 40 CFR 141.23 (a)(4), 141.23 (b)(8), 141.23 (c)(7), 141.23 (c)(9), 141.23 (f)(1), 141.23(g), 141.23(m) and 141.23(n);

(b) For nitrate, 40 CFR 141.23 (a)(4), 141.23 (d)(2), 141.23 (d)(3), 141.23 (f)(2), 141.23(g), 141.23(m), 141.23(n), and 141.23(o);

(c) For nitrite, 40 CFR 141.23 (a)(4), 141.23 (e)(3), 141.23 (f)(2), and 141.23(g); or

(d) The purveyor of any public water system providing service that has secondary inorganic MCL exceedances shall take follow-up action as required by the department. Follow-up action shall be commensurate with the degree of consumer acceptance of the water quality and their willingness to bear the costs of meeting the secondary standard. For new community water systems and new nontransient noncommunity water systems without active consumers, treatment for secondary contaminant MCL exceedances will be required.

(4) Lead and copper follow-up monitoring shall be conducted in accordance with 40 CFR 141.85(d), 141.86 (d)(2), 141.86 (d)(3), 141.87(d) and 141.88(b) through 141.88(d).

(5) Turbidity.

Purveyors monitoring turbidity in accordance with Part 6 of this chapter shall provide follow-up under WAC 246-290-634.

(6) Organic chemicals. Follow-up monitoring shall be conducted in accordance with the following:

(a) For VOCs, 40 CFR 141.24 (f)(11) through 141.24 (f)(15), and 141.24 (f)(22); or

(b) For SOCs, 40 CFR 141.24(b), 141.24(c) and 141.24 (h)(7) through 141.24 (h)(11), and 141.24 (h)(20).

(7) Radionuclide follow-up monitoring shall be conducted under 40 CFR 141.26 (a)(2)(iv), 141.26 (a)(3)(ii) through (v), 141.26 (a)(4), 141.26 (b)(6), and 141.26 (c)(5).

(8) The department shall determine the purveyor's follow-up action when a substance not included in this chapter is detected.

[Statutory Authority: RCW 70.119A.180 and 43.20.050. 08-03-061, § 246-290-320, filed 1/14/08, effective 2/14/08. Statutory Authority: RCW 43.20.-050 and 70.119A.080. 04-04-056, § 246-290-320, filed 1/30/04, effective 3/1/04. Statutory Authority: RCW 43.20.050 (2) and (3) and 70.119A.080. 03-08-037, § 246-290-320, filed 3/27/03, effective 4/27/03. Statutory Authority: RCW 43.02.050 [43.20.050]. 99-07-021, § 246-290-320, filed 3/9/99, effective 4/9/99. Statutory Authority: RCW 43.20.050. 94-14-001, § 246-290-320, filed 6/22/94, effective 7/23/94; 93-08-011 (Order 352B), § 246-290-320, filed 3/25/93, effective 4/25/93; 92-04-070 (Order 241B), § 246-290-320, filed 2/4/92, effective 3/6/92. Statutory Authority: Chapter 43.20 RCW. 91-07-031 (Order 150B), § 246-290-320, filed 3/15/91, effective 4/15/91. Statutory Authority: RCW 43.20.050. 91-02-051 (Order 124B), recodified as § 246-290-320, filed 12/27/90, effective 1/31/91. Statutory Authority: P.L. 99-339. 89-21-020 (Order 336), § 248-54-185, filed 10/10/89, effective 11/10/89. Statutory Authority: RCW 34.04.045. 88-05-057 (Order 307), § 248-54-185, filed 2/17/88. Statutory Authority: RCW 43.20.050. 83-19-002 (Order 266), § 248-54-185, filed 9/8/83.]

PART 5.
WATER SYSTEM OPERATIONS

WAC 246-290-415 Operations and maintenance. (1) The purveyor shall ensure that the system is operated in accordance with the operations and maintenance program as established in the approved water system plan required under WAC 246-290-100 or the small water system management program under WAC 246-290-105.

(2) The operations and maintenance program shall include the following elements as applicable:

(a) Water system management and personnel;

(b) Operator certification;

(c) Comprehensive monitoring plan for all contaminants under WAC 246-290-300;

(d) Emergency response program;

(e) Cross-connection control program; and

(f) Maintenance of service reliability in accordance with WAC 246-290-420.

(3) The purveyor shall ensure that the system is operated in accordance with good operations procedures such as those available in texts, handbooks, and manuals available from the following sources:

(a) American Water Works Association (AWWA), 6666 West Quincy Avenue, Denver, Colorado 80235;

(b) American Society of Civil Engineers (ASCE), 345 East 47th Street, New York, New York 10017-2398;

(c) Ontario Ministry of the Environment, 135 St. Clair Avenue West, Toronto, Ontario M4V1B5, Canada;

(d) The Chlorine Institute, 2001 "L" Street NW, Washington, D.C. 20036;

(e) California State University, 600 "J" Street, Sacramento, California 95819;

(f) Health Research Inc., Health Education Services Division, P.O. Box 7126, Albany, New York 12224; and

(g) Any other standards acceptable to the department.

(4) The purveyor shall not establish or maintain a bypass to divert water around any feature of a treatment process, except by written approval from the department.

(5) The purveyor shall take preventive or corrective action as directed by the department when results of an inspection conducted by the department indicate conditions which are currently or may become a detriment to system operation.

(6) The purveyor of a system using surface water or GWI shall meet operational requirements specified in Part 6 of this chapter.

(7) The purveyor shall have a certified operator if required under chapter 70.119 RCW and chapter 246-292 WAC.

(8) The purveyor shall at all times employ reasonable security measures to assure the raw water intake facilities, water treatment processes, water storage facilities, and the distribution system are protected from possible damage or compromise by unauthorized persons, animals, vegetation, or similar intruding agents. Such measures include elements such as locks on hatches, fencing of facilities, screening of reservoir vents or openings, and other recommendations as may be found in the current edition of the *Recommended Standards for Water Works, A Committee Report of the Great Lakes - Upper Mississippi River Board of State Public Health and Environmental Managers.*

(9) All purveyors utilizing ground water wells shall monitor well levels from ground level to the static water level on a seasonal basis, including low demand and high demand periods, to document the continuing availability of the source to meet projected, long-term demands. Purveyors shall maintain this data and provide it to the department upon request.

(10) All operation and maintenance practices shall conform to Part 5 of this chapter.

[Statutory Authority: RCW 43.02.050 [43.20.050]. 99-07-021, § 246-290-415, filed 3/9/99, effective 4/9/99.]

WAC 246-290-416 Sanitary surveys. (1) All public water systems shall submit to a sanitary survey conducted by the department, or the department's designee, based upon the following schedule:

(a) For community and nontransient noncommunity water systems, every five years, or more frequently as determined by the department. The sanitary surveys shall be consistent with the schedules presented in 40 CFR 141.21; and

(b) For transient noncommunity water systems, every five years unless the system uses only disinfected ground water and has an approved wellhead protection program, in which case the survey shall be every ten years. The sanitary surveys shall be conducted consistent with schedules presented in 40 CFR 141.21.

(c) For community public water systems that use a surface water or GWI source, every three years. Surveys may be reduced to every five years upon written approval from the department.

(2) All public water system purveyors shall be responsible for:

(a) Ensuring cooperation in scheduling sanitary surveys with the department, or its designee; and

(b) Ensuring the unrestricted availability of all facilities and records at the time of the sanitary survey.

(3) All public water systems that use a surface water or GWI source shall, within forty-five days following receipt of a sanitary survey report that identifies significant deficiencies, identify in writing to the department how the system will correct the deficiencies and propose a schedule to complete the corrections. The department may modify the schedule if necessary to protect the health of water system users.

[Statutory Authority: RCW 43.20.050 (2) and (3) and 70.119A.080. 03-08-037, § 246-290-416, filed 3/27/03, effective 4/27/03. Statutory Authority: RCW 43.02.050 [43.20.050]. 99-07-021, § 246-290-416, filed 3/9/99, effective 4/9/99.]

WAC 246-290-420 Reliability and emergency response. (1) All public water systems shall provide an adequate quantity and quality of water in a reliable manner at all times consistent with the requirements of this chapter.

(2) During normal operating conditions, for both average and peak demand periods, water pressure at the consumer's service meter, or property line if a meter is not used, shall be maintained at the approved design pressure, but in no case be less than 20 psi (140 kPa). Water quality shall be maintained as required in Part 4 and Part 6 of this chapter.

(3) When fire flow is required, 20 psi (140 kPa) at the operating hydrant and at least positive pressure shall be maintained throughout the system under fire flow conditions.

(4) The purveyor shall address abnormal operating conditions, such as those associated with fires, floods, unscheduled power outages, facility failures, and system maintenance, by using measures consistent with applicable regulations and industry standards to ensure the system is constructed, maintained, and operated to protect against the risk of contamination by cross-connections as a result of loss of system pressure.

(5) For operations during abnormal conditions, the purveyor shall establish the level of reliability, in accordance with consumer expectations, to ensure prevention of loss of pressure or prompt restoration of pressure when a loss of pressure has occurred. Consumer expectations may be established by a simple majority of the affected consumers within the system's service area, or within specific, definable pressure zones when different levels of service may be encountered. A simple majority of consumers can be associated with either a vote of the consumers for privately owned and operated systems, or of the system's governing body, such as council, board, or commission, for publicly governed systems. Consumer expectations shall not be used by a purveyor to justify a failure to address routine or repeated loss of pressure within the system, or within specific, definable pressure zones, because of the purveyor's failure to properly construct, maintain, or operate the system. The level of reliability established under this subsection, and measures for achieving such reliability, shall be identified in the operations and maintenance program and incorporated into the water system design, and shall be approved by the department. The level of reliability shall not affect the purveyor's obligations under subsections (1) through (4) of this section.

(6) The purveyor shall implement all appropriate measures necessary to meet the identified level of reliability for normal and abnormal operating conditions. Procedures for system operation during normal and abnormal operating conditions shall be documented in an operations and mainte-

nance and emergency response program in accordance with WAC 246-290-415 and shall be implemented in a timely and reasonable manner.

(7) If a purveyor is unable to satisfactorily address departmental concerns or consumer complaints regarding the level of reliability associated with normal or abnormal operating conditions, the purveyor may be required to prepare a project report pursuant to WAC 246-290-110 that addresses an evaluation of the problem, impacts on affected consumers, and recommended corrective action. Unless the department determines that public health protection requires otherwise, improvements related to abnormal operating conditions described under subsection (5) of this section will be required commensurate with the established level of reliability for abnormal operating conditions.

(8) Restrictions on designed, or historically documented, normal water uses shall not be allowed except under the following conditions:

(a) Whenever there is clear evidence that, unless limitations are imposed, water use at normal levels will lead to a relatively rapid depletion of water source reserves, such as in drought situations or when significant facility failures occur;

(b) Whenever a water system observes that demands for water exceed the available supply, as a result of such events as miscalculated planning, inattentive operation, or unforeseen problems with sources and that limitations would be necessary to insure basic levels of service while additional sources were being sought or developed, or the situation was being otherwise remedied; or

(c) Whenever the water system institutes restrictions as part of a water use efficiency program which has been accepted by the system consumers through appropriate public decision-making processes within existing governance mechanisms, or has been mandated under state regulatory authority.

(9) A purveyor shall provide the department with the current names, addresses, and telephone numbers of the owners, operators, and emergency contact persons for the system, including any changes to this information. The purveyor shall also maintain twenty-four-hour phone availability and shall respond to consumer concerns and service complaints in a timely manner.

[Statutory Authority: RCW 70.119A.180. 07-02-025B, § 246-290-420, filed 12/22/06, effective 1/22/07. Statutory Authority: RCW 43.02.050 [43.20.-050]. 99-07-021, § 246-290-420, filed 3/9/99, effective 4/9/99. Statutory Authority: RCW 43.20.050. 93-08-011 (Order 352B), § 246-290-420, filed 3/25/93, effective 4/25/93; 91-02-051 (Order 124B), recodified as § 246-290-420, filed 12/27/90, effective 1/31/91. Statutory Authority: P.L. 99-339. 89-21-020 (Order 336), § 248-54-201, filed 10/10/89, effective 11/10/89. Statutory Authority: RCW 34.04.045. 88-05-057 (Order 307), § 248-54-201, filed 2/17/88.]

WAC 246-290-451 Disinfection of drinking water. (1) No portion of a public water system containing potable water shall be put into service, nor shall service be resumed until the facility has been effectively disinfected.

(a) In cases of new construction, drinking water shall not be furnished to the consumer until satisfactory bacteriological samples have been analyzed by a laboratory certified by the state; and

(b) In cases of existing water mains, when the integrity of the main is lost resulting in a significant loss of pressure that places the main at risk to cross-connection contamination, the purveyor shall use standard industry practices such as flushing, disinfection, and/or bacteriological sampling to ensure adequate and safe water quality prior to the return of the line to service;

(c) If a cross-connection is confirmed, the purveyor shall satisfy the reporting requirements as described under WAC 246-290-490(8).

(2) The procedure used for disinfection shall conform to standards published by the American Water Works Association, or other industry standards acceptable to the department.

(3) The purveyor of a system using ground water and required to disinfect, shall meet the following disinfection requirements, unless otherwise directed by the department:

(a) Minimum contact time at a point at or before the first consumer of:

(i) Thirty minutes if 0.2 mg/L free chlorine residual is maintained;

(ii) Ten minutes if 0.6 mg/L free chlorine residual is maintained; or

(iii) Any combination of free chlorine residual concentration (C), measured in mg/L, and contact time (T), measured in minutes, that results in a CT product (C X T) of greater than or equal to six; or

(iv) Contact time (T) for surface water or GWI sources shall be determined in accordance with WAC 246-290-636.

(b) Detectable residual disinfectant concentration in all active parts of the distribution system, measured as total chlorine, free chlorine, combined chlorine, or chlorine dioxide;

(c) Water in the distribution system with an HPC level less than or equal to 500 organisms/mL is considered to have a detectable residual disinfectant concentration.

(4) The department may require the purveyor to provide longer contact times, higher chlorine residuals, or additional treatment to protect the health of consumers served by the public water system.

(5) The purveyor of a system using surface water or GWI shall meet disinfection requirements specified in Part 6 of this chapter.

(6) The purveyor of a system adding a chemical disinfectant shall monitor residual disinfectant concentration at representative points in the system on a daily basis, and at the same time and location of routine and repeat coliform sample collection. Frequency of disinfection residual monitoring may be reduced upon written request to the department if it can be shown that disinfection residuals can be maintained on a reliable basis without the provision of daily monitoring, but shall be no less frequent than specified in WAC 246-290-300 (3)(a)(i).

(7) The analyses shall be conducted in accordance with "standard methods." To assure adequate monitoring of chlorine residual, the department may require the use of continuous chlorine residual analyzers and recorders.

[Statutory Authority: RCW 43.20.050 (2) and (3) and 70.119A.080. 03-08-037, § 246-290-451, filed 3/27/03, effective 4/27/03. Statutory Authority: RCW 43.02.050 [43.20.050]. 99-07-021, § 246-290-451, filed 3/9/99, effective 4/9/99.]

WAC 246-290-455 Operation of chemical contaminant treatment facilities. (1) Purveyors shall ensure finished drinking water from chemical contaminant treatment facili-

ties complies with the minimum water quality standards established in WAC 246-290-310. This section does not apply to facilities used only for corrosion control treatment purposes.

(2) The purveyor shall collect finished drinking water samples at a point directly downstream of the treatment system prior to the first consumer on a monthly basis.

(a) Finished drinking water samples from treatment systems utilized for removal of contaminants with established primary MCLs shall be submitted to a certified laboratory for analysis of the specific contaminant(s) of concern.

(b) Finished drinking water samples from treatment systems utilized for removal of contaminants with established secondary MCLs shall be submitted to a certified laboratory for analysis or analyzed for the specific contaminant(s) of concern by the purveyor through department-approved on-site methods.

(c) Additional finished drinking water monitoring may be required by the department based on the complexity or size of the water system.

(3) If primary MCLs following treatment are exceeded in four or more months of a consecutive twelve-month compliance period, the purveyor shall submit a project report to the department that addresses the failure to maintain compliance. The project report shall include methods and schedules to correct the treatment deficiency and/or indicate schedules for implementing an alternate source of supply or an effective treatment technology.

(4) If secondary MCLs following treatment are exceeded in four or more months of a consecutive twelve-month compliance period, the purveyor shall take action per WAC 246-290-320 (3)(d).

[Statutory Authority: RCW 43.02.050 [43.20.050]. 99-07-021, § 246-290-455, filed 3/9/99, effective 4/9/99.]

WAC 246-290-460 Fluoridation of drinking water. (1) Purveyors shall obtain written department approval of fluoridation treatment facilities before placing them in service.

(2) Where fluoridation is practiced, purveyors shall maintain fluoride concentrations in the range 0.8 through 1.3 mg/L throughout the distribution system.

(3) Where fluoridation is practiced, purveyors shall take the following actions to ensure that concentrations remain at optimal levels and that fluoridation facilities and monitoring equipment are operating properly:

(a) Daily monitoring.

(i) Take daily monitoring samples for each point of fluoride addition and analyze the fluoride concentration. Samples must be taken downstream from each fluoride injection point at the first sample tap where adequate mixing has occurred.

(ii) Record the results of daily analyses in a monthly report format acceptable to the department. A report must be made for each point of fluoride addition.

(iii) Submit monthly monitoring reports to the department within the first ten days of the month following the month in which the samples were collected.

(b) Monthly split sampling.

(i) Take a monthly split sample at the same location where routine daily monitoring samples are taken. A monthly split sample must be taken for each point of fluoride addition.

(ii) Analyze a portion of the sample and record the results on the lab sample submittal form and on the monthly report form.

(iii) Forward the remainder of the sample, along with the completed sample form to the state public health laboratory, or other state-certified laboratory, for fluoride analysis.

(iv) If a split sample is found by the certified lab to be:

(A) Not within the range of 0.8 to 1.3 mg/l, the purveyor's fluoridation process shall be considered out of compliance.

(B) Differing by more than 0.30 mg/l from the purveyor's analytical result, the purveyor's fluoride testing shall be considered out of control.

(4) Purveyors shall conduct analyses prescribed in subsection (3) of this section in accordance with procedures listed in the most recent edition of *Standard Methods for the Examination of Water and Wastewater*.

(5) The purveyor may be required by the department to increase the frequency, and/or change the location of sampling prescribed in subsection (3) of this section to ensure the adequacy and consistency of fluoridation.

[Statutory Authority: RCW 43.02.050 [43.20.050]. 99-07-021, § 246-290-460, filed 3/9/99, effective 4/9/99. Statutory Authority: RCW 43.20.050. 91-02-051 (Order 124B), recodified as § 246-290-460, filed 12/27/90, effective 1/31/91. Statutory Authority: RCW 34.04.045. 88-05-057 (Order 307), § 248-54-235, filed 2/17/88. Statutory Authority: RCW 43.20.050. 83-19-002 (Order 266), § 248-54-235, filed 9/8/83.]

WAC 246-290-470 Uncovered finished water storage facilities. (1) Existing uncovered finished water storage facilities shall be operated based on a plan of operation approved by the department.

(2) Purveyors with uncovered finished water storage facilities shall have a department-approved plan and schedule to cover all reservoirs on file with the department.

(3) The plan of operation shall address the following elements as a minimum:

(a) Assurance of the means and levels associated with the provision of continuous disinfection at all times water is being delivered to the public, including the reliability provisions outlined in WAC 246-290-420;

(b) Description of the means for control of debris, algal, or other aquatic organism growths, surface water runoff, and atmospheric or avian-borne airborne contamination;

(c) Procedures for ensuring that construction will not lead to reservoir contamination;

(d) Provisions for ensuring adequate security measures are provided; and

(e) Any required, or department-directed, monitoring and reporting.

(4) Systems using uncovered finished water reservoirs must comply with 40 CFR 141.714.

[Statutory Authority: RCW 70.119A.180 and 43.20.050. 08-03-061, § 246-290-470, filed 1/14/08, effective 2/14/08. Statutory Authority: RCW 43.02.-050 [43.20.050]. 99-07-021, § 246-290-470, filed 3/9/99, effective 4/9/99. Statutory Authority: RCW 43.20.050. 93-08-011 (Order 352B), § 246-290-470, filed 3/25/93, effective 4/25/93; 91-02-051 (Order 124B), recodified as § 246-290-470, filed 12/27/90, effective 1/31/91; 83-19-002 (Order 266), § 248-54-245, filed 9/8/83.]

WAC 246-290-480 Recordkeeping and reporting. (1) Records. The purveyor shall keep the following records of operation and water quality analyses:

(a) Bacteriological and turbidity analysis results shall be kept for five years. Chemical analysis results shall be kept for as long as the system is in operation. Records of source meter readings shall be kept for ten years. Other records of operation and analyses required by the department shall be kept for three years. All records shall bear the signature of the operator in responsible charge of the water system or his or her representative. Systems shall keep these records available for inspection by the department and shall send the records to the department if requested. Actual laboratory reports may be kept or data may be transferred to tabular summaries, provided the following information is included:

(i) The date, place, and time of sampling, and the name of the person collecting the sample;

(ii) Identification of the sample type (routine distribution system sample, repeat sample, source or finished water sample, or other special purpose sample);

(iii) Date of analysis;

(iv) Laboratory and person responsible for performing analysis;

(v) The analytical method used; and

(vi) The results of the analysis.

(b) Records of action taken by the system to correct violations of primary drinking water standards. For each violation, records of actions taken to correct the violation, and copies of public notifications shall be kept for no less than three years after the last corrective action taken.

(c) Copies of any written reports, summaries, or communications relating to sanitary surveys or SPIs of the system conducted by system personnel, by a consultant or by any local, state, or federal agency, shall be kept for ten years after completion of the sanitary survey or SPI involved.

(d) Copies of project reports, construction documents and related drawings, inspection reports and approvals shall be kept for the life of the facility.

(e) Where applicable, records of the following shall be kept for a minimum of three years:

(i) Chlorine residual;

(ii) Fluoride level;

(iii) Water treatment plant performance including, but not limited to:

(A) Type of chemicals used and quantity;

(B) Amount of water treated;

(C) Results of analyses; and

(iv) Other information as specified by the department.

(f) The purveyor shall retain copies of public notices made under Part 7, Subpart A of this chapter and certifications made to the department under 40 CFR 141.33(e) for a period of at least three years after issuance.

(g) Purveyors using conventional, direct, or in-line filtration that recycle spent filter backwash water, thickener supernatant, or liquids from dewatering processes within their treatment plant shall, beginning no later than June 8, 2004, collect and retain on file the following information for review and evaluation by the department:

(i) A copy of the recycle notification and information submitted to the department under WAC 246-290-660 (4)(a)(i).

(ii) A list of all recycle flows and the frequency with which they are returned.

(iii) Average and maximum backwash flow rate through the filters and the average and maximum duration of the filter backwash process in minutes.

(iv) Typical filter run length and a written summary of how filter run length is determined.

(v) The type of treatment provided for the recycle flow.

(vi) Data on the physical dimensions of the equalization and/or treatment units, typical and maximum hydraulic loading rates, type of treatment chemicals used and average dose and frequency of use, and frequency at which solids are removed, if applicable.

(h) Purveyors required to conduct disinfection profiling and benchmarking under 40 CFR 141.530 through 141.544 shall retain the results on file indefinitely.

(i) Purveyors using surface water or GWI sources must keep the records required by 40 CFR 141.722.

(2) Reporting.

(a) Unless otherwise specified in this chapter, the purveyor shall report to the department within forty-eight hours the failure to comply with any national primary drinking water regulation (including failure to comply with any monitoring requirements) as set forth in this chapter. For violations assigned to Tier 1 in WAC 246-290-71001, the department must be notified as soon as possible, but no later than twenty-four hours after the violation is known.

(b) The purveyor shall submit to the department reports required by this chapter, including tests, measurements, and analytic reports. Monthly reports are due before the tenth day of the following month, unless otherwise specified in this chapter.

(c) The purveyor shall submit to the department copies of any written summaries or communications relating to the status of monitoring waivers during each monitoring cycle or as directed by the department.

(d) Source meter readings shall be made available to the department.

(e) Water facilities inventory form (WFI).

(i) Purveyors of **community** and **NTNC** systems shall submit an annual WFI update to the department;

(ii) Purveyors of **TNC** systems shall submit an updated WFI to the department as requested;

(iii) Purveyors shall submit an updated WFI to the department within thirty days of any change in name, category, ownership, or responsibility for management of the water system, or addition of source or storage facilities; and

(iv) At a minimum the completed WFI shall provide the current names, addresses, and telephone numbers of the owners, operators, and emergency contact persons for the system.

(f) Bacteriological. The purveyor shall notify the department of the presence of:

(i) Coliform in a sample, within ten days of notification by the laboratory; and

(ii) Fecal coliform or *E. coli* in a sample, by the end of the business day in which the purveyor is notified by the laboratory. If the purveyor is notified of the results after normal close of business, then the purveyor shall notify the department before the end of the next business day.

(g) Systems monitoring for disinfection by-products under WAC 246-290-300(6) shall report information to the department as specified in 40 CFR 141.134.

(h) Systems monitoring for disinfectant residuals under WAC 246-290-300(6) shall report information to the department as specified in subsection (2)(a) of this section, and 40 CFR 141.134(b).

(i) Systems required to monitor for disinfection by-product precursor removal under WAC 246-290-300(6) shall report information to the department as specified in 40 CFR 141.134(d).

(j) Systems subject to the enhanced treatment requirements for *Cryptosporidium* under WAC 246-290-630(4) shall report information to the department as specified in 40 CFR 141.706 and 141.721.

(k) Systems that use acrylamide and epichlorohydrin in the treatment of drinking water, must certify annually in writing to the department that the combination (or product) of dose and monomer level does not exceed the levels specified in (k)(i) and (ii) of this subsection. Certifications shall reference maximum use levels established by an ANSI-accredited listing organization approved by the department.

(i) Acrylamide = 0.05 percent dosed at 1 ppm (or equivalent); and

(ii) Epichlorohydrin = 0.01 percent dosed at 20 ppm (or equivalent).

(l) Use of products that exceed the specified levels constitutes a treatment technique violation and the public must be notified under the public notice requirements under Part 7, Subpart A of this chapter.

(m) Systems shall submit to the department, in accordance with 40 CFR 141.31(d), a certification that the system has complied with the public notification regulations (Part 7, Subpart A of this chapter) when a public notification is required. Along with the certification, the system shall submit a representative copy of each type of notice.

[Statutory Authority: RCW 70.119A.180 and 43.20.050. 08-03-061, § 246-290-480, filed 1/14/08, effective 2/14/08. Statutory Authority: RCW 70.119A.180. 07-02-025B, § 246-290-480, filed 12/22/06, effective 1/22/07. Statutory Authority: RCW 43.20.050 and 70.119A.080. 04-04-056, § 246-290-480, filed 1/30/04, effective 3/1/04. Statutory Authority: RCW 43.20.050 (2) and (3) and 70.119A.080. 03-08-037, § 246-290-480, filed 3/27/03, effective 4/27/03. Statutory Authority: RCW 43.02.050 [43.20.-050]. 99-07-021, § 246-290-480, filed 3/9/99, effective 4/9/99. Statutory Authority: RCW 43.20.050. 94-14-001, § 246-290-480, filed 6/22/94, effective 7/23/94; 93-08-011 (Order 352B), § 246-290-480, filed 3/25/93, effective 4/25/93; 92-04-070 (Order 241B), § 246-290-480, filed 2/4/92, effective 3/6/92; 91-02-051 (Order 124B), recodified as § 246-290-480, filed 12/27/90, effective 1/31/91. Statutory Authority: P.L. 99-339. 89-21-020 (Order 336), § 248-54-265, filed 10/10/89, effective 11/10/89. Statutory Authority: RCW 34.04.045. 88-05-057 (Order 307), § 248-54-265, filed 2/17/88. Statutory Authority: RCW 43.20.050. 83-19-002 (Order 266), § 248-54-265, filed 9/8/83.]

WAC 246-290-490 Cross-connection control. (1) Applicability, purpose, and responsibility.

(a) All community water systems shall comply with the cross-connection control requirements specified in this section.

(b) All noncommunity water systems shall apply the principles and provisions of this section, including subsection (4)(b) of this section, as applicable to protect the public water system from contamination via cross-connections. Noncommunity systems that comply with subsection (4)(b) of this section and the provisions of WAC 51-56-0600 of the UPC (which addresses the installation of backflow preventers at points of water use within the potable water system) shall be considered in compliance with the requirements of this section.

(c) The purpose of the purveyor's cross-connection control program shall be to protect the public water system, as defined in WAC 246-290-010, from contamination via cross-connections.

(d) The purveyor's responsibility for cross-connection control shall begin at the water supply source, include all the public water treatment, storage, and distribution facilities, and end at the point of delivery to the consumer's water system, which begins at the downstream end of the service connection or water meter located on the public right of way or utility-held easement.

(e) Under this section, purveyors are not responsible for eliminating or controlling cross-connections within the consumer's water system. Under chapter 19.27 RCW, the responsibility for cross-connection control within the consumer's water system, i.e., within the property lines of the consumer's premises, lies with the authority having jurisdiction.

(2) General program requirements.

(a) The purveyor shall develop and implement a cross-connection control program that meets the requirements of this section, but may establish a more stringent program through local ordinances, resolutions, codes, bylaws, or operating rules.

(b) Purveyors shall ensure that good engineering and public health protection practices are used in the development and implementation of cross-connection control programs. Department publications and the most recently published editions of references, such as, but not limited to, those listed below, may be used as guidance for cross-connection program development and implementation:

(i) *Manual of Cross-Connection Control* published by the Foundation for Cross-Connection Control and Hydraulic Research, University of Southern California (USC Manual);

(ii) *Cross-Connection Control Manual, Accepted Procedure and Practice* published by the Pacific Northwest Section of the American Water Works Association (PNWS-AWWA Manual); or

(iii) Guidance document: *Cross-Connection Control for Small Water Systems* published by the department.

(c) The purveyor may implement the cross-connection control program, or any portion thereof, directly or by means of a contract with another agency or party acceptable to the department.

(d) The purveyor shall coordinate with the authority having jurisdiction in all matters concerning cross-connection control. The purveyor shall document and describe the coordination, including delineation of responsibilities, in the written cross-connection control program required in (e) of this subsection.

(e) The purveyor shall include a written description of the cross-connection control program in the water system plan required under WAC 246-290-100 or the small water system management program required under WAC 246-290-105. The cross-connection control program shall include the minimum program elements described in subsection (3) of this section.

(f) The purveyor shall ensure that cross-connections between the distribution system and a consumer's water system are eliminated or controlled by the installation of an approved backflow preventer commensurate with the degree of hazard. This can be accomplished by implementation of a cross-connection program that relies on:

(i) Premises isolation as defined in WAC 246-290-010; or

(ii) Premises isolation and in-premises protection as defined in WAC 246-290-010.

(g) Purveyors with cross-connection control programs that rely both on premises isolation and in-premises protection:

(i) Shall comply with the premises isolation requirements specified in subsection (4)(b) of this section; and

(ii) May reduce premises isolation requirements and rely on in-premises protection for premises other than the type addressed in subsection (4)(b) of this section, only if the following conditions are met:

(A) The in-premises backflow preventers provide a level of protection commensurate with the purveyor's assessed degree of hazard;

(B) Backflow preventers which provide the in-premises backflow protection meet the definition of approved backflow preventers as described in WAC 246-290-010;

(C) The approved backflow preventers are installed, inspected, tested (if applicable), maintained, and repaired in accordance with subsections (6) and (7) of this section;

(D) Records of the backflow preventers are maintained in accordance with subsections (3)(j) and (8) of this section; and

(E) The purveyor has reasonable access to the consumer's premises to conduct an initial hazard evaluation and periodic reevaluations to determine whether the in-premises protection is adequate to protect the purveyor's distribution system.

(h) The purveyor shall take appropriate corrective action as authorized by the legal instrument required by subsection (3)(b) of this section, when:

(i) A cross-connection exists that is not controlled commensurate to the degree of hazard assessed by the purveyor; or

(ii) A consumer fails to comply with the purveyor's requirements regarding the installation, inspection, testing, maintenance or repair of approved backflow preventers required by this chapter.

(i) The purveyor's corrective action may include, but is not limited to:

(i) Denying or discontinuing water service to a consumer's premises until the cross-connection hazard is eliminated or controlled to the satisfaction of the purveyor;

(ii) Requiring the consumer to install an approved backflow preventer for premises isolation commensurate with the degree of hazard; or

(iii) The purveyor installing an approved backflow preventer for premises isolation commensurate with the degree of hazard.

(j) Except in the event of an emergency, purveyors shall notify the authority having jurisdiction prior to denying or discontinuing water service to a consumer's premises for one or more of the reasons listed in (h) of this subsection.

(k) The purveyor shall prohibit the intentional return of used water to the purveyor's distribution system. Used water includes, but is not limited to, water used for heating, cooling, or other purposes within the consumer's water system.

(3) Minimum elements of a cross-connection control program.

(a) To be acceptable to the department, the purveyor's cross-connection control program shall include the minimum elements identified in this subsection.

(b) Element 1: The purveyor shall adopt a local ordinance, resolution, code, bylaw, or other written legal instrument that:

(i) Establishes the purveyor's legal authority to implement a cross-connection control program;

(ii) Describes the operating policies and technical provisions of the purveyor's cross-connection control program; and

(iii) Describes the corrective actions used to ensure that consumers comply with the purveyor's cross-connection control requirements.

(c) Element 2: The purveyor shall develop and implement procedures and schedules for evaluating new and existing service connections to assess the degree of hazard posed by the consumer's premises to the purveyor's distribution system and notifying the consumer within a reasonable time frame of the hazard evaluation results. At a minimum, the program shall meet the following:

(i) For connections made on or after April 9, 1999, procedures shall ensure that an initial evaluation is conducted before water service is provided;

(ii) For all other connections, procedures shall ensure that an initial evaluation is conducted in accordance with a schedule acceptable to the department; and

(iii) For all service connections, once an initial evaluation has been conducted, procedures shall ensure that periodic reevaluations are conducted in accordance with a schedule acceptable to the department and whenever there is a change in the use of the premises.

(d) Element 3: The purveyor shall develop and implement procedures and schedules for ensuring that:

(i) Cross-connections are eliminated whenever possible;

(ii) When cross-connections cannot be eliminated, they are controlled by installation of approved backflow preventers commensurate with the degree of hazard; and

(iii) Approved backflow preventers are installed in accordance with the requirements of subsection (6) of this section.

(e) Element 4: The purveyor shall ensure that personnel, including at least one person certified as a CCS, are provided to develop and implement the cross-connection control program.

(f) Element 5: The purveyor shall develop and implement procedures to ensure that approved backflow preventers relied upon to protect the public water system are inspected and/or tested (as applicable) under subsection (7) of this section.

(g) Element 6: The purveyor shall develop and implement a backflow prevention assembly testing quality control assurance program, including, but not limited to, documentation of BAT certification and test kit calibration, test report

contents, and time frames for submitting completed test reports.

(h) Element 7: The purveyor shall develop and implement (when appropriate) procedures for responding to backflow incidents.

(i) Element 8: The purveyor shall include information on cross-connection control in the purveyor's existing program for educating consumers about water system operation. The public education program may include periodic bill inserts, public service announcements, pamphlet distribution, notification of new consumers and consumer confidence reports.

(j) Element 9: The purveyor shall develop and maintain cross-connection control records including, but not limited to, the following:

(i) A master list of service connections and/or consumer's premises where the purveyor relies upon approved backflow preventers to protect the public water system from contamination, the assessed hazard level of each, and the required backflow preventer(s);

(ii) Inventory information on backflow preventers that protect the public water system including:

(A) Approved air gaps installed in lieu of approved assemblies including exact air gap location, assessed degree of hazard, installation date, history of inspections, inspection results, and person conducting inspections;

(B) Approved backflow assemblies including exact assembly location, assembly description (type, manufacturer, model, size, and serial number), assessed degree of hazard, installation date, history of inspections, tests and repairs, test results, and person performing tests; and

(C) Approved AVBs used for irrigation system applications including location, description (manufacturer, model, and size), installation date, history of inspection(s), and person performing inspection(s).

(iii) Cross-connection program summary reports and backflow incident reports required under subsection (8) of this section.

(k) Element 10: Purveyors who distribute and/or have facilities that receive reclaimed water within their water service area shall meet any additional cross-connection control requirements imposed by the department in a permit issued under chapter 90.46 RCW.

(4) Approved backflow preventer selection.

(a) The purveyor shall ensure that a CCS:

(i) Assesses the degree of hazard posed by the consumer's water system upon the purveyor's distribution system; and

(ii) Determines the appropriate method of backflow protection for premises isolation as described in Table 8.

TABLE 8
APPROPRIATE METHODS OF BACKFLOW PROTECTION FOR PREMISES ISOLATION

Degree of Hazard	Application Condition	Appropriate Approved Backflow Preventer
High health cross-connection hazard	Backsiphonage or backpressure backflow	AG, RPBA, or RPDA
Low cross-connection hazard	Backsiphonage or backpressure backflow	AG, RPBA, RPDA, DCVA, or DCDA

(b) Premises isolation requirements.

(i) The purveyor shall ensure that an approved air gap, RPBA, or RPDA is installed for premises isolation for service connections to premises posing a high health cross-connection hazard including, but not limited to, those premises listed in Table 9, except those premises identified as severe in (b)(ii) of this subsection.

(ii) For service connections to premises posing a severe health cross-connection hazard including wastewater treatment plants, radioactive material processing plants, and nuclear reactors, the purveyor shall ensure that either an:

(A) Approved air gap is installed for premises isolation; or

(B) Approved RPBA or RPDA is installed for premises isolation in combination with an in-plant approved air gap.

(iii) If the purveyor's CCS determines that no hazard exists for a connection serving premises of the type listed in Table 9, the purveyor may grant an exception to the premises isolation requirements of (b)(i) of this subsection.

(iv) The purveyor shall document, on a case-by-case basis, the reasons for granting an exception under (b)(i) of this subsection and include the documentation in the cross-connection control program annual summary report required in subsection (8) of this section.

TABLE 9
SEVERE* AND HIGH HEALTH CROSS-CONNECTION HAZARD PREMISES REQUIRING PREMISES ISOLATION BY AG OR RPBA

Agricultural (farms and dairies)
Beverage bottling plants
Car washes
Chemical plants
Commercial laundries and dry cleaners
Premises where both reclaimed water and potable water are provided
Film processing facilities
Food processing plants
Hospitals, medical centers, nursing homes, veterinary, medical and dental clinics, and blood plasma centers
Premises with separate irrigation systems using the purveyor's water supply and with chemical addition+
Laboratories
Metal plating industries
Mortuaries
Petroleum processing or storage plants
Piers and docks
Radioactive material processing plants or nuclear reactors*
Survey access denied or restricted
Wastewater lift stations and pumping stations
Wastewater treatment plants*
Premises with an unapproved auxiliary water supply interconnected with the potable water supply

+ For example, parks, playgrounds, golf courses, cemeteries, estates, etc.
* RPBAs for connections serving these premises are acceptable only when used in combination with an in-plant approved air gap; otherwise, the purveyor shall require an approved air gap at the service connection.

(c) Backflow protection for single-family residences.

(i) For single-family residential service connections, the purveyor shall comply with the premises isolation requirements of (b) of this subsection when applicable.

(ii) If the requirements of (b) of this subsection do not apply and the requirements specified in subsection (2)(g)(ii) of this section are met, the purveyor may rely on backflow protection provided at the point of hazard in accordance with WAC 51-56-0600 of the UPC for hazards such as, but not limited to:

(A) Irrigation systems;

(B) Swimming pools or spas;

(C) Ponds; and

(D) Boilers.

For example, the purveyor may accept an approved AVB on a residential irrigation system, if the AVB is properly installed under the UPC.

(d) Backflow protection for fire protection systems.

(i) Backflow protection is not required for residential flow-through or combination fire protection systems constructed of potable water piping and materials.

(ii) For service connections with fire protection systems other than flow-through or combination systems, the purveyor shall ensure that backflow protection consistent with WAC 51-56-0600 of the UPC is installed. The UPC requires minimum protection as follows:

(A) An RPBA or RPDA for fire protection systems with chemical addition or using unapproved auxiliary water supply; and

(B) A DCVA or DCDA for all other fire protection systems.

(iii) For connections made on or after April 9, 1999, the purveyor shall ensure that backflow protection is installed before water service is provided.

(iv) For existing fire protection systems:

(A) With chemical addition or using unapproved auxiliary supplies, the purveyor shall ensure that backflow protection is installed within ninety days of the purveyor notifying the consumer of the high health cross-connection hazard or in accordance with an alternate schedule acceptable to the purveyor.

(B) Without chemical addition, without on-site storage, and using only the purveyor's water (i.e., no unapproved auxiliary supplies on or available to the premises), the purveyor shall ensure that backflow protection is installed in accordance with a schedule acceptable to the purveyor or at an earlier date if required by the code official administering the State Building Code as defined in chapter 51-04 WAC.

(C) When establishing backflow protection retrofitting schedules for fire protection systems that have the characteristics listed in (d)(iv)(B) of this subsection, the purveyor may consider factors such as, but not limited to, impacts of assembly installation on sprinkler performance, costs of retrofitting, and difficulty of assembly installation.

(e) Purveyors may require approved backflow preventers commensurate with the degree of hazard as determined by the purveyor to be installed for premises isolation for connections serving premises that have characteristics such as, but not limited to, the following:

(i) Complex plumbing arrangements or plumbing potentially subject to frequent changes that make it impracticable to assess whether cross-connection hazards exist;

(ii) A repeated history of cross-connections being established or reestablished; or

(iii) Cross-connection hazards are unavoidable or not correctable, such as, but not limited to, tall buildings.

(5) Approved backflow preventers.

(a) The purveyor shall ensure that all backflow prevention assemblies relied upon by the purveyor are models included on the current list of backflow prevention assemblies approved for use in Washington state. The current approved assemblies list is available from the department upon request.

(b) The purveyor may rely on testable backflow prevention assemblies that are not currently approved by the department, if the assemblies:

(i) Were included on the department and/or USC list of approved backflow prevention assemblies at the time of installation;

(ii) Have been properly maintained;

(iii) Are commensurate with the purveyor's assessed degree of hazard; and

(iv) Have been inspected and tested at least annually and have successfully passed the annual tests.

(c) The purveyor shall ensure that an unlisted backflow prevention assembly is replaced by an approved assembly commensurate with the degree of hazard, when the unlisted assembly:

(i) Does not meet the conditions specified in (b)(i) through (iv) of this subsection;

(ii) Is moved; or

(iii) Cannot be repaired using spare parts from the original manufacturer.

(d) The purveyor shall ensure that AVBs meet the definition of approved atmospheric vacuum breakers as described in WAC 246-290-010.

(6) Approved backflow preventer installation.

(a) The purveyor shall ensure that approved backflow preventers are installed in the orientation for which they are approved (if applicable).

(b) The purveyor shall ensure that approved backflow preventers are installed in a manner that:

(i) Facilitates their proper operation, maintenance, inspection, in-line testing (as applicable), and repair using standard installation procedures acceptable to the department such as those in the USC Manual or PNWS-AWWA Manual;

(ii) Ensures that the assembly will not become submerged due to weather-related conditions such as flooding; and

(iii) Ensures compliance with all applicable safety regulations.

(c) The purveyor shall ensure that approved backflow assemblies for premises isolation are installed at a location adjacent to the meter or property line or an alternate location acceptable to the purveyor.

(d) When premises isolation assemblies are installed at an alternate location acceptable to the purveyor, the purveyor

shall ensure that there are no connections between the point of delivery from the public water system and the approved backflow assembly, unless the installation of the connection meets the purveyor's cross-connection control requirements and is specifically approved by the purveyor.

(e) The purveyor shall ensure that approved backflow preventers are installed in accordance with the following time frames:

(i) For connections made on or after April 9, 1999, the following conditions shall be met before service is provided:

(A) The provisions of subsection (3)(d)(ii) of this section; and

(B) Satisfactory completion of the requirements of subsection (7) of this section.

(ii) For existing connections where the purveyor identifies a high health cross-connection hazard, the provisions of (3)(d)(ii) of this section shall be met:

(A) Within ninety days of the purveyor notifying the consumer of the high health cross-connection hazard; or

(B) In accordance with an alternate schedule acceptable to the purveyor.

(iii) For existing connections where the purveyor identifies a low cross-connection hazard, the provisions of subsection (3)(d)(ii) of this section shall be met in accordance with a schedule acceptable to the purveyor.

(f) The purveyor shall ensure that bypass piping installed around any approved backflow preventer is equipped with an approved backflow preventer that:

(i) Affords at least the same level of protection as the approved backflow preventer that is being bypassed; and

(ii) Complies with all applicable requirements of this section.

(7) Approved backflow preventer inspection and testing.

(a) For backflow preventers that protect the public water system, the purveyor shall ensure that:

(i) A CCS inspects backflow preventer installations to ensure that protection is provided commensurate with the assessed degree of hazard;

(ii) Either a BAT or CCS inspects:

(A) Air gaps installed in lieu of approved backflow prevention assemblies for compliance with the approved air gap definition; and

(B) Backflow prevention assemblies for correct installation and approval status.

(iii) A BAT tests approved backflow prevention assemblies for proper operation.

(b) The purveyor shall ensure that inspections and/or tests of approved air gaps and approved backflow assemblies that protect the public water system are conducted:

(i) When any of the following occur:

(A) Upon installation, repair, reinstallation, or relocation of an assembly;

(B) Upon installation or replumbing of an air gap;

(C) After a backflow incident involving the assembly or air gap; and

(ii) Annually thereafter, unless the purveyor requires more frequent testing for high hazard premises or for assemblies that repeatedly fail.

(c) The purveyor shall ensure that inspections of AVBs installed on irrigation systems are conducted:

(i) At the time of installation;

(ii) After a backflow incident; and

(iii) After repair, reinstallation, or relocation.

(d) The purveyor shall ensure that approved backflow prevention assemblies are tested using procedures acceptable to the department, such as those specified in the most recently published edition of the USC Manual. When circumstances, such as, but not limited to, configuration or location of the assembly, preclude the use of USC test procedures, the purveyor may allow, on a case-by-case basis, the use of alternate (non-USC) test procedures acceptable to the department.

(e) The purveyor shall ensure that results of backflow prevention assembly inspections and tests are documented and reported in a manner acceptable to the purveyor.

(f) The purveyor shall ensure that an approved backflow prevention assembly or AVB, whenever found to be improperly installed, defective, not commensurate with the degree of hazard, or failing a test (if applicable) is properly reinstalled, repaired, overhauled, or replaced.

(g) The purveyor shall ensure that an approved air gap, whenever found to be altered or improperly installed, is properly replumbed or, if commensurate with the degree of hazard, is replaced by an approved RPBA.

(8) Recordkeeping and reporting.

(a) Purveyors shall keep cross-connection control records for the following time frames:

(i) Records pertaining to the master list of service connections and/or consumer's premises required in subsection (3)(j)(i) of this section shall be kept as long as the premises pose a cross-connection hazard to the purveyor's distribution system;

(ii) Records regarding inventory information required in subsection (3)(j)(ii) of this section shall be kept for five years or for the life of the approved backflow preventer whichever is shorter; and

(iii) Records regarding backflow incidents and annual summary reports required in subsection (3)(j)(iii) of this section shall be kept for five years.

(b) Purveyors may maintain cross-connection control records in original form or transfer data to tabular summaries.

(c) Purveyors may maintain records or data in any media, such as paper, film, or electronic format.

(d) The purveyor shall complete the cross-connection control program summary report annually. Report forms and guidance on completing the report are available from the department.

(e) The purveyor shall make all records and reports required in subsection (3)(j) of this section available to the department or its representative upon request.

(f) The purveyor shall notify the department, authority having jurisdiction, and local health jurisdiction as soon as possible, but no later than the end of the next business day, when a backflow incident is known by the purveyor to have:

(i) Contaminated the public water system; or

(ii) Occurred within the premises of a consumer served by the purveyor.

(g) The purveyor shall:

(i) Document details of backflow incidents contaminating the public water system on a backflow incident report form available from the department; and

(ii) Include all backflow incident report(s) in the annual cross-connection program summary report referenced in (d)

of this subsection, unless otherwise requested by the department.

[Statutory Authority: RCW 70.119A.180 and 43.20.050. 08-03-061, § 246-290-490, filed 1/14/08, effective 2/14/08. Statutory Authority: RCW 43.20.-050 (2) and (3) and 70.119A.080. 03-08-037, § 246-290-490, filed 3/27/03, effective 4/27/03. Statutory Authority: RCW 43.02.050 [43.20.050]. 99-07-021, § 246-290-490, filed 3/9/99, effective 4/9/99. Statutory Authority: RCW 43.20.050. 91-02-051 (Order 124B), recodified as § 246-290-490, filed 12/27/90, effective 1/31/91. Statutory Authority: P.L. 99-339. 89-21-020 (Order 336), § 248-54-285, filed 10/10/89, effective 11/10/89. Statutory Authority: RCW 34.04.045. 88-05-057 (Order 307), § 248-54-285, filed 2/17/88. Statutory Authority: RCW 43.20.050. 83-19-002 (Order 266), § 248-54-285, filed 9/8/83.]

WAC 246-290-496 Metering requirements. (1) Production:

(a) The volume of water produced or purchased must be measured using a source meter or other meter installed upstream of the distribution system.

(b) The requirements of this section do not alter any source metering regulations adopted by either the department of health or the department of ecology.

(c) The requirements of this section do not apply to volumes of water delivered to a public water system through an emergency intertie.

(2) Consumption:

(a) The requirements of this section apply to public water systems that supply water for municipal water supply purposes.

(b) Except as provided in (g) of this subsection, the volume of water delivered to consumers must be measured by meters installed on all direct service connections.

(c) Meters must be installed on all existing direct service connections and clustered entities as provided in (g) of this subsection within ten years of the effective date of this rule.

(d) Meters must be installed on all new direct service connections when the service connection is activated.

(e) Meters must be installed on all interties used as permanent or seasonal sources within ten years of the effective date of this rule.

(f) If a system is not fully metered, the municipal water supplier shall complete the following:

(i) Develop a meter installation schedule consistent with this section.

(A) For systems serving one thousand or more total connections, submit the schedule to the department by July 1, 2008.

(B) For systems serving less than one thousand total connections, submit the schedule to the department by July 1, 2009.

(C) The schedule must include milestones demonstrating steady and continuous progress toward compliance with the requirements of this section.

(ii) Implement activities to ensure distribution system leakage is minimized (e.g., periodic leak detection and repair) until the system is fully metered.

(iii) Report the status of meter installation and all actions taken to minimize leakage in annual performance reports developed under WAC 246-290-840 and water use efficiency programs developed under WAC 246-290-810.

(g) The volume of water may be measured through a single meter for the following clustered entities:

(i) A campground;

(ii) A recreational vehicle park;

(iii) A designated mobile home park;

(iv) A building with multiple units; and

(v) A complex with multiple buildings served as a single connection.

(3) Meters must be selected, installed, operated, calibrated, and maintained following generally accepted industry standards and information from the manufacturer.

[Statutory Authority: RCW 70.119A.180. 07-02-025B, § 246-290-496, filed 12/22/06, effective 1/22/07.]

WAC 246-290-500 Severability. If any provision of this chapter or its application to any person or circumstances is held invalid, the remainder of this chapter, or the application of the provision to other persons or circumstances, shall not be affected.

[Statutory Authority: RCW 43.20.050. 91-02-051 (Order 124B), recodified as § 246-290-500, filed 12/27/90, effective 1/31/91. Statutory Authority: RCW 34.04.045. 88-05-057 (Order 307), § 248-54-291, filed 2/17/88.]

PART 6.
SURFACE WATER TREATMENT

Subpart A - Introduction and General Requirements

WAC 246-290-601 Purpose of surface water treatment. (1) Part 6 of chapter 246-290 WAC establishes filtration and disinfection as treatment technique requirements for water systems using surface or GWI sources. The Part 6 treatment technique requirements are established in lieu of maximum contaminant levels (MCLs) for the following contaminants:

(a) *Giardia lamblia*;

(b) Viruses;

(c) Heterotrophic plate count bacteria;

(d) *Legionella*;

(e) *Cryptosporidium*; and

(f) Turbidity.

(2) For water systems using unfiltered surface sources, in whole or part, and that have been required to install, but have yet to complete the installation and operation of, filtration facilities, the turbidity levels at entry points to distribution and sampling/analytical requirements shall be under 40 CFR 141.13 and 40 CFR 141.22, respectively.

[Statutory Authority: RCW 70.119A.180 and 43.20.050. 08-03-061, § 246-290-601, filed 1/14/08, effective 2/14/08. Statutory Authority: RCW 43.20.-050 and 70.119A.080. 04-04-056, § 246-290-601, filed 1/30/04, effective 3/1/04. Statutory Authority: RCW 43.20.050 (2) and (3) and 70.119A.080. 03-08-037, § 246-290-601, filed 3/27/03, effective 4/27/03. Statutory Authority: RCW 43.02.050 [43.20.050]. 99-07-021, § 246-290-601, filed 3/9/99, effective 4/9/99. Statutory Authority: RCW 43.20.050. 93-08-011 (Order 352B), § 246-290-601, filed 3/25/93, effective 4/25/93.]

WAC 246-290-620 Applicability of surface water treatment requirements. (1) The requirements of Part 6 of this chapter apply to water systems that:

(a) Use surface sources or ground water sources under the direct influence of surface water (GWI); or

(b) Purchase surface or GWI water from an approved public water system or other entity acceptable to the department.

(2) The requirements of Part 6 of this chapter do not apply to water systems that use unfiltered surface or GWI sources as emergency sources, provided the source is physically disconnected from the system at all times until it is needed, and the purveyor meets the following conditions:

(a) Has a department-approved emergency response plan; and

(b) Provides disinfection treatment that meets the requirements under WAC 246-290-662 (2)(d).

(3) The requirements of WAC 246-290-640 apply to **Group A** systems that use sources potentially under the influence of surface water as determined by the department.

[Statutory Authority: RCW 43.02.050 [43.20.050]. 99-07-021, § 246-290-620, filed 3/9/99, effective 4/9/99. Statutory Authority: RCW 43.20.050. 93-08-011 (Order 352B), § 246-290-620, filed 3/25/93, effective 4/25/93.]

WAC 246-290-630 General requirements. (1) The purveyor shall ensure that treatment is provided for surface and GWI sources consistent with the treatment technique requirements specified in Part 6 of chapter 246-290 WAC.

(2) The purveyor shall install and properly operate water treatment processes to ensure at least:

(a) 99.9 percent (3 log) removal and/or inactivation of *Giardia lamblia* cysts;

(b) 99.99 percent (4 log) removal and/or inactivation of viruses; and

(c) 99 percent (2 log) removal of *Cryptosporidium* oocysts if required to filter.

(3) The purveyor shall ensure that the requirements of subsection (2) of this section are met between a point where the source water is not subject to contamination by untreated surface water and a point at or before the first consumer.

(4) The department may require higher levels of removal and/or inactivation of *Giardia lamblia* cysts, *Cryptosporidium* oocysts, and viruses than specified in subsection (2) of this section if deemed necessary to protect the health of consumers served by the system.

(5) The purveyor shall ensure that personnel operating a system subject to Part 6 of chapter 246-290 WAC meet the requirements under chapter 70.119 RCW and chapter 246-292 WAC.

(6) The purveyor of a **Group A community** system serving water from a surface or GWI source to the public before January 1, 1991, shall comply with applicable minimum treatment requirements. The purveyor shall meet either:

(a) The filtration and disinfection requirements under WAC 246-290-660 and 246-290-662 respectively;

(b) The criteria to remain unfiltered under WAC 246-290-690 and the disinfection requirements under WAC 246-290-692; or

(c) The criteria to provide a limited alternative to filtration under WAC 246-290-691 and the disinfection requirements under WAC 246-290-692.

(7) The purveyor of a **Group A noncommunity** system serving water from a surface or GWI source, shall meet either:

(a) The filtration and disinfection requirements under WAC 246-290-660 and 246-290-662, respectively; or

(b) The criteria to provide a limited alternative to filtration under WAC 246-290-691 and the disinfection requirements under WAC 246-290-692.

(8) The purveyor of a **Group A** system first serving water from a surface or GWI source to the public after December 31, 1990, shall meet either:

(a) The filtration and disinfection requirements under WAC 246-290-660 and 246-290-662, respectively; or

(b) The criteria to provide a limited alternative to filtration under WAC 246-290-691 and the disinfection requirements under WAC 246-290-692.

(9) The purveyor of a system required to install filtration may choose to provide a limited alternative to filtration or abandon the surface or GWI source as a permanent or seasonal source and develop an alternate, department-approved source. Purveyors that develop alternate ground water sources or purchase water from a department-approved public water system using a ground water source shall no longer be subject to Part 6 of chapter 246-290 WAC, once the alternate source is approved by the department and is on line.

(10) A purveyor that chooses to provide a limited alternative to filtration shall submit an application to the department that contains the information necessary to determine whether the source can meet the criteria.

(11) If a limited alternative to filtration is provided, then the purveyor shall install and properly operate treatment processes to ensure greater removal and/or inactivation efficiencies of *Giardia lamblia* cysts, viruses, or other pathogenic organisms of public health concern (including *Cryptosporidium* oocysts) than would be achieved by the combination of filtration and chlorine disinfection.

(12) Systems that were required to develop a disinfection profile under 40 CFR 141.172 shall provide that profile and a calculated disinfection benchmark, as described in 40 CFR 141.172 (c)(2) and (3), along with other project information specified in WAC 246-290-110, when proposing any change to the disinfection treatment system. The proposal for change shall include an analysis of how the proposed change will affect the current level of disinfection. The profile must also be available for inspection during routine sanitary surveys conducted under WAC 246-290-416.

(13) Community and nontransient noncommunity systems serving less than ten thousand persons must meet the disinfection profiling and benchmarking provisions required under 40 CFR 141.530 through 141.544.

(14) Systems required to develop a disinfection profile under 40 CFR 141.530 shall provide that profile and a calculated disinfection benchmark, as described in 40 CFR 141.543 along with other project information specified in WAC 246-290-110, when proposing any change to the disinfection treatment system. The proposal for change shall include an analysis of how the proposed change will affect the current level of disinfection. The profile must also be available for inspection during routine sanitary surveys conducted under WAC 246-290-416.

(15) A system using conventional, direct, or in-line filtration that must arrange for the conduct of a CPE, under 40 CFR 141.175 (b)(4) or 40 CFR 141.563, may be required to arrange for CTA. The department will determine the need for CTA on a case-by-case basis.

(16) Water systems subject to the requirements of Part 6 of this chapter must also comply with the enhanced treatment requirements for *Cryptosporidium* under 40 CFR Subpart W.

The requirements are in addition to the requirements of Part 6 of this chapter and include:

(a) General requirements under 40 CFR 141.700;

(b) Source monitoring requirements under 40 CFR 141.701-707;

(c) Disinfection profiling and benchmarking requirements under 40 CFR 141.708-709;

(d) Treatment technique requirements under 40 CFR 141.710-714;

(e) Requirements for microbial toolbox components under 40 CFR 141.715-720; and

(f) Reporting and recordkeeping requirements under 40 CFR 141.721-722.

(17) Water systems using UV reactors to obtain treatment credit for *Cryptosporidium* removal must:

(a) Validate the reactors using the validation testing procedures specified under 40 CFR 141.720 (d)(2); or

(b) Validate the reactor under Austrian ONORM Standards or German DVGW Standards.

[Statutory Authority: RCW 70.119A.180 and 43.20.050. 08-03-061, § 246-290-630, filed 1/14/08, effective 2/14/08. Statutory Authority: RCW 43.20.-050 and 70.119A.080. 04-04-056, § 246-290-630, filed 1/30/04, effective 3/1/04. Statutory Authority: RCW 43.20.050 (2) and (3) and 70.119A.080. 03-08-037, § 246-290-630, filed 3/27/03, effective 4/27/03. Statutory Authority: RCW 43.20.050. 99-07-021 and 99-10-076, § 246-290-630, filed 3/9/99 and 5/4/99, effective 4/9/99 and 6/4/99; 93-08-011 (Order 352B), § 246-290-630, filed 3/25/93, effective 4/25/93.]

WAC 246-290-632 Treatment technique violations. (1) A treatment technique violation shall be considered a violation of a primary drinking water standard and in the case of an unfiltered system, may result in the purveyor of an unfiltered system being required to install filtration.

(2) A treatment technique violation occurs when a system using a surface or GWI source is identified by the department as the source of a waterborne disease outbreak or any of the following occur as applicable:

(a) The purveyor providing filtration delivers unfiltered water or fails to meet one or more of the following requirements:

(i) Filtration treatment in accordance with WAC 246-290-660; or

(ii) Disinfection treatment in accordance with WAC 246-290-662.

(b) The purveyor required to install filtration:

(i) Fails to meet the interim disinfection requirements under WAC 246-290-672 or as otherwise directed by the department; or

(ii) Fails to install filtration or develop an alternate source by the applicable time lines specified in WAC 246-290-670.

(c) The purveyor of an unfiltered surface water, or GWI source, meeting the criteria to remain unfiltered:

(i) Delivers water with a turbidity level exceeding 5.0 NTU measured at a point immediately prior to the point of primary disinfection; or

(ii) Fails to meet one or more of the disinfection requirements under WAC 246-290-692 after the dates specified in WAC 246-290-686.

(d) The purveyor of an unfiltered source meeting the criteria to provide a limited alternative to filtration:

(i) Delivers water with a turbidity level exceeding 5.0 NTU measured at a point immediately prior to the point of primary disinfection; or

(ii) Fails to meet one or more of the disinfection requirements under WAC 246-290-692.

(e) A purveyor supplies water from an unfiltered source that has not been previously approved by the department.

(f) A purveyor of a department approved unfiltered source that fails to meet the on-going criteria to remain unfiltered:

(i) Delivers water with a turbidity level exceeding 5.0 NTU measured at a point immediately prior to the point of primary disinfection; or

(ii) Fails to meet one or more of the disinfection requirements under WAC 246-290-692.

(g) A purveyor of a department approved unfiltered source that has failed to meet the criteria to provide a limited alternative to filtration:

(i) Delivers water with a turbidity level exceeding 5.0 NTU measured at a point immediately prior to the point of primary disinfection; or

(ii) Fails to meet one or more of the disinfection requirements under WAC 246-290-692.

(h) A purveyor fails to meet the enhanced *Cryptosporidium* treatment requirements under 40 CFR 141.711 or 141.712.

[Statutory Authority: RCW 70.119A.180 and 43.20.050. 08-03-061, § 246-290-632, filed 1/14/08, effective 2/14/08. Statutory Authority: RCW 43.02.-050 [43.20.050]. 99-07-021, § 246-290-632, filed 3/9/99, effective 4/9/99. Statutory Authority: RCW 43.20.050. 94-14-001, § 246-290-632, filed 6/22/94, effective 7/23/94; 93-08-011 (Order 352B), § 246-290-632, filed 3/25/93, effective 4/25/93.]

WAC 246-290-634 Follow-up to treatment technique violations. When a treatment technique violation occurs, the purveyor:

(1) Shall report to the department in accordance with:

(a) WAC 246-290-666 for purveyors providing filtration or required to filter;

(b) WAC 246-290-674 for purveyors installing filtration; or

(c) WAC 246-290-696 for purveyors meeting the criteria to remain unfiltered or providing a limited alternative to filtration;

(2) Shall notify the public in accordance with Part 7, Subpart A of this chapter;

(3) Shall determine the cause of the violation;

(4) Shall take action as directed by the department; and

(5) May be subject to enforcement under WAC 246-290-050.

[Statutory Authority: RCW 43.20.050 (2) and (3) and 70.119A.080. 03-08-037, § 246-290-634, filed 3/27/03, effective 4/27/03. Statutory Authority: RCW 43.02.050 [43.20.050]. 99-07-021, § 246-290-634, filed 3/9/99, effective 4/9/99. Statutory Authority: RCW 43.20.050. 93-08-011 (Order 352B), § 246-290-634, filed 3/25/93, effective 4/25/93.]

WAC 246-290-636 Determination of disinfectant contact time (T). (1) The purveyor shall calculate T at peak hourly flow for each surface or GWI source.

(2) For pipelines, the purveyor shall calculate T by dividing the internal volume of the pipe by the peak hourly flow rate through that pipe.

(3) For all other system components used for inactivation of *Giardia lamblia* cysts, viruses, and other microorganisms of public health concern, the purveyor shall use tracer studies or empirical methods to determine T.

(4) The purveyor shall use the T10 value determined by tracer studies or other methods acceptable to the department as T in all CT calculations.

(5) Tracer studies.

(a) The purveyor shall conduct field tracer studies on all system components with configurations (geometry and/or baffling) for which analogous contact times are not documented.

(b) Before conducting tracer studies, the purveyor shall obtain the department's approval of a tracer study plan. The plan shall identify at a minimum:

(i) How the purveyor will conduct the study;

(ii) The tracer material to be used;

(iii) Flow rates to be used; and

(iv) The names, titles, and qualifications of the persons conducting the study.

(c) A professional engineer registered in the state of Washington shall direct the conduct of all tracer studies.

(d) Tracer studies shall be conducted in accordance with good engineering practices using methods acceptable to the department such as those described in department guidance on surface water treatment.

(e) The department may require the purveyor to conduct additional tracer studies when:

(i) Modifications impacting flow distribution or T are made; or

(ii) Increases in flow exceed the conditions of the previous tracer studies.

(6) Empirical methods.

(a) Empirical methods may be used to calculate T10, if the purveyor demonstrates to the department's satisfaction that system components have configurations analogous to components on which tracer studies have been conducted and results have been documented.

(b) The purveyor shall submit to the department for review and approval engineering justification for determining T10 using empirical methods. As-built drawings of system components in their current configurations shall be submitted with the engineering justification.

(c) A professional engineer registered in the state of Washington shall prepare the engineering justification for determining T10 using empirical methods.

[Statutory Authority: RCW 43.02.050 [43.20.050]. 99-07-021, § 246-290-636, filed 3/9/99, effective 4/9/99. Statutory Authority: RCW 43.20.050. 93-08-011 (Order 352B), § 246-290-636, filed 3/25/93, effective 4/25/93.]

WAC 246-290-638 Analytical requirements. (1) The purveyor shall ensure that only qualified persons conduct measurements for pH, temperature, turbidity, and residual disinfectant concentrations. In this section, qualified shall mean:

(a) A person certified under chapter 246-292 WAC;

(b) An analyst, with experience conducting these measurements, from the state public health laboratory or another laboratory certified by the department; or

(c) A state or local health agency professional experienced in conducting these measurements.

(2) The purveyor shall ensure that measurements for temperature, turbidity, pH, and residual disinfectant concentration are made in accordance with "standard methods," or other EPA approved methods.

(3) The purveyor shall ensure that samples for coliform and HPC analysis are:

(a) Collected and transported in accordance with department-approved methods; and

(b) Submitted to the state public health laboratory or another laboratory certified by the department to conduct the analyses.

(4) Turbidity monitoring.

(a) The purveyor shall equip the system's water treatment facility laboratory with a:

(i) Bench model turbidimeter; and

(ii) Continuous turbidimeter and recorder if required under WAC 246-290-664 or 246-290-694.

(b) The purveyor shall ensure that bench model and continuous turbidimeters are:

(i) Designed to meet the criteria in "standard methods," EPA Method 180.1, or Great Lakes Instruments Method 2; and

(ii) Properly operated, calibrated, and maintained at all times in accordance with the manufacturer's recommendations.

(c) The purveyor shall validate continuous turbidity measurements for accuracy as follows:

(i) Calibrate turbidity equipment based upon a primary standard in the expected range of measurements; and

(ii) Verify continuous turbidimeter performance on a weekly basis, not on consecutive days, with grab sample measurements made using a properly calibrated bench model turbidimeter.

(d) When continuous turbidity monitoring equipment fails, the purveyor shall measure turbidity on grab samples collected at least every four hours from the combined filter effluent and individual filters while the system serves water to the public and the equipment is being repaired or replaced. The purveyor shall have continuous monitoring equipment on-line within five working days of failure.

(5) Purveyors monitoring for *Cryptosporidium* or *E. coli* as required under 40 CFR 141.701 shall collect samples and have them analyzed under 40 CFR 141.704 and 141.705.

[Statutory Authority: RCW 70.119A.180 and 43.20.050. 08-03-061, § 246-290-638, filed 1/14/08, effective 2/14/08. Statutory Authority: RCW 43.20.-050 (2) and (3) and 70.119A.080. 03-08-037, § 246-290-638, filed 3/27/03, effective 4/27/03. Statutory Authority: RCW 43.02.050 [43.20.050]. 99-07-021, § 246-290-638, filed 3/9/99, effective 4/9/99. Statutory Authority: RCW 43.20.050. 93-08-011 (Order 352B), § 246-290-638, filed 3/25/93, effective 4/25/93.]

WAC 246-290-639 SWTR records. (1) Purveyors using surface or GWI sources shall maintain accurate and complete operations records.

(2) Operations records shall include, but not be limited to, the following as applicable:

(a) Results of all monitoring conducted under Part 6 of chapter 246-290 WAC;

(b) Quantity of water produced, plant flow rates, and hours of operation;

(c) Types and quantities of chemicals used;

(d) Dates and information pertaining to filter and/or disinfection system maintenance;

(e) Dates and results of filter and/or disinfection system inspections including records of filtration and backwash rates;

(f) Dates and descriptions of major equipment and/or treatment process failures and corrective actions taken; and

(g) The information and data specified under 40 CFR 141.721 related to enhanced treatment for *Cryptosporidium*.

(3) Operations records not reported to the department under WAC 246-290-666 or 246-290-696 shall be maintained at the purveyor's treatment facility.

[Statutory Authority: RCW 70.119A.180 and 43.20.050. 08-03-061, § 246-290-639, filed 1/14/08, effective 2/14/08. Statutory Authority: RCW 43.20.-050. 93-08-011 (Order 352B), § 246-290-639, filed 3/25/93, effective 4/25/93.]

WAC 246-290-640 Determination of GWI sources. (1) Until the department has made a source GWI determination, the purveyor shall monitor in accordance with the requirements for ground water sources in WAC 246-290-300 or as directed by the department and provide follow-up in accordance with WAC 246-290-320.

(2) The purveyor, after being notified by the department that one or more of the system sources have been classified as potential GWI, may elect to seek approval from the department to modify the potential GWI source to mitigate surface water influences prior to compliance with subsection (3) of this section, and if so, shall:

(a) Complete a project report, for departmental approval, that describes the proposed source-related modifications, including the schedule for their completion and an explanation of why the source should be reclassified upon completion of the source modifications; and

(b) Demonstrate compliance, if directed by the department, with the requirements of subsection (3) of this section upon completion of the source-related modifications.

(3) The purveyor using a source identified as a potential GWI shall provide to the department all information necessary to determine whether the source is under direct surface water influence. Information shall include, but not be limited to:

(a) Site-specific source water quality data, including temperature, conductivity, and/or other appropriate parameters as determined by the department;

(b) Documentation of source construction characteristics;

(c) Documentation of hydrogeology;

(d) Distance to surface water; and

(e) Water quality results from nearby surface water(s), including temperature, conductivity, and/or other appropriate parameters as determined by the department.

(4) Upon a determination by the department that one or more potential GWI source(s) being used are in hydraulic connection to a surface water, the purveyor shall:

(a) Secure the services of a professional engineer to direct further evaluation and actions regarding the source;

(b) Provide disinfection treatment of the source in accordance with WAC 246-290-451; and

(c) Provide microscopic particulate analyses (MPA) results for review by the department based upon a sampling plan approved by the department.

(5) A purveyor notified by the department that one or more GWI sources are in use shall:

(a) Within ninety days of notification submit a project report to the department that includes an implementation schedule for compliance with the treatment techniques specified in Part 6 of this chapter;

(b) Notify consumers served by the system; and

(c) Comply with the applicable requirements of WAC 246-290-670.

(6) After completion of the requirements in subsection (3) of this section, the purveyor may modify a GWI source to mitigate direct surface influence. In such cases, the purveyor shall:

(a) Include in a project report, for submittal to the department for approval, a description of the proposed approaches and schedule for source modification; and

(b) Comply again with subsection (3) of this section upon completion of source modifications to be considered for source reclassification.

(7) The department may reevaluate a ground water source for direct surface influence, if conditions impacting source classification have changed.

[Statutory Authority: RCW 43.02.050 [43.20.050]. 99-07-021, § 246-290-640, filed 3/9/99, effective 4/9/99. Statutory Authority: RCW 43.20.050. 93-08-011 (Order 352B), § 246-290-640, filed 3/25/93, effective 4/25/93.]

Subpart B - Requirements for Filtered Systems

WAC 246-290-650 Compliance requirements for filtered systems. (1) In addition to the requirements of Parts 1 through 5 of chapter 246-290 WAC, Subpart B of Part 6 of chapter 246-290 WAC applies to purveyors of systems using surface or GWI sources and providing filtration, including:

(a) Systems with water treatment facilities that produced water served to the public before January 1, 1991;

(b) Unfiltered systems installing filtration, once the new water treatment facilities are on-line; and

(c) New systems using surface or GWI sources. For the purpose of the Part 6 chapter 246-290 WAC requirements, new systems are defined as systems first serving water to the public after December 31, 1990.

(2) The purveyor of a new system using a surface or GWI source shall comply with the requirements of Part 6 subparts A and B chapter 246-290 WAC and be subject to the treatment technique violations specified in WAC 246-290-632 beginning when the system first serves water to the public and thereafter.

[Statutory Authority: RCW 43.02.050 [43.20.050]. 99-07-021, § 246-290-650, filed 3/9/99, effective 4/9/99. Statutory Authority: RCW 43.20.050. 93-08-011 (Order 352B), § 246-290-650, filed 3/25/93, effective 4/25/93.]

WAC 246-290-652 Filtration technology and design criteria for existing filtered systems. (1) The purveyor shall treat all surface and GWI sources using one of the following filtration technologies unless another technology is acceptable to the department:

(a) Conventional;

(b) Direct;

(c) Diatomaceous earth; or

(d) Slow sand.

(2) Purveyors not using one of the filtration technologies in subsection (1) of this section or not complying with the design criteria specified in WAC 246-290-676 shall submit a project report to the department that demonstrates to the department's satisfaction that the existing water treatment facility can be operated to reliably produce, by June 29, 1993, water meeting the operating and performance requirements of WAC 246-290-654 and 246-290-660, respectively. The project report shall comply with the requirements of WAC 246-290-110.

(3) The purveyor shall make the demonstration required under subsection (2) of this section using the latest twelve months of operating data, results of special studies conducted to test the performance of the water treatment facility under adverse water quality conditions or other means acceptable to the department.

(4) For water treatment facilities currently unable to meet the performance and operation requirements, the project report shall specify the modifications needed to upgrade the facility. Purveyors upgrading existing water treatment facilities shall comply with the design and reliability requirements under WAC 246-290-676 and 246-290-678, respectively.

(5) The purveyor of a new system using a surface or GWI source shall be subject to the:

(a) Design and reliability requirements under WAC 246-290-676 and 246-290-678, respectively; and

(b) Operating criteria for new water treatment facilities under WAC 246-290-654.

[Statutory Authority: RCW 43.02.050 [43.20.050]. 99-07-021, § 246-290-652, filed 3/9/99, effective 4/9/99. Statutory Authority: RCW 43.20.050. 93-08-011 (Order 352B), § 246-290-652, filed 3/25/93, effective 4/25/93.]

WAC 246-290-654 Treatment criteria for filtered systems. (1) The purveyor shall operate filters so that maximum flow rates do not exceed those specified in Table 10. The purveyor may operate filters at higher flow rates, if the purveyor demonstrates to the department's satisfaction that filtration at the higher rate consistently achieves at least 99 percent (2 log) removal of *Giardia lamblia* cysts and 99 percent (2 log) removal of *Cryptosporidium* oocysts and meets the turbidity performance requirements of Table 11.

Table 10
FILTRATION OPERATION CRITERIA

FILTRATION TECHNOLOGY/MEDIA	MAXIMUM FILTRATION RATE (gpm/ft²)
Conventional, Direct and In-Line	
Gravity Filters with Single Media	3
Gravity Filters with Deep Bed, Dual or Mixed Media	6
Pressure Filters with Single Media	2
Pressure Filters with Deep Bed, Dual or Mixed Media	3
Slow Sand	0.1
Diatomaceous Earth	1.0

(2) The purveyor using conventional, direct or in-line filtration shall ensure that effective coagulation is in use at all times the water treatment facility produces water served to the public.

(3) The purveyor using conventional, direct, or in-line filtration shall demonstrate treatment effectiveness for *Giardia lamblia* cyst and *Cryptosporidium* oocyst removal by one of the following methods:

(a) Turbidity reduction method.

(i) The purveyor shall make source and filtered water turbidity measurements in accordance with WAC 246-290-664 (2) and (3) respectively.

(ii) The purveyor shall achieve:

(A) The turbidity performance requirements specified in WAC 246-290-660(1) and at least an eighty percent reduction in source turbidity based on an average of the daily turbidity reductions measured in a calendar month; or

(B) An average daily filtered water turbidity less than or equal to 0.1 NTU.

(b) Particle counting method. The purveyor shall:

(i) Use a particle counting protocol acceptable to the department; and

(ii) Demonstrate at a frequency acceptable to the department at least the following log reduction of particles in the size range of five to fifteen microns (*Giardia lamblia* cyst-sized particles) and three to five microns (*Cryptosporidium* oocyst-sized particles), as applicable:

(A) 2.5 log reduction in *Giardia lamblia* cyst-sized particles and a 2 log reduction in *Cryptosporidium* particles for systems using conventional filtration; or

(B) 2.0 log reduction for systems using direct or in-line filtration.

(c) Microscopic particulate analysis method. The purveyor shall:

(i) Use a protocol acceptable to the department; and

(ii) Demonstrate at a frequency acceptable to the department at least the following log reduction of *Giardia lamblia* cysts and *Cryptosporidium* oocysts or *Giardia lamblia* cyst and *Cryptosporidium* oocyst surrogate indicators as applicable:

(A) 2.5 log reduction in *Giardia lamblia* cysts or surrogates and a 2 log reduction in *Cryptosporidium* oocyst or surrogates for systems using conventional filtration; and

(B) 2.0 log reduction for systems using direct or in-line filtration.

(d) Other methods acceptable to the department.

(4) The purveyor shall ensure continuous disinfection of all water delivered to the public and shall:

(a) Maintain an adequate supply of disinfection chemicals and keep back-up system components and spare parts on hand;

(b) Develop, maintain, and post at the water treatment facility a plan detailing:

(i) How water delivered to the public will be continuously and adequately disinfected; and

(ii) The elements of an emergency notification plan to be implemented whenever the residual disinfectant concentration at entry to distribution falls below 0.2 mg/L for more than one hour.

(c) Implement the plan during an emergency affecting disinfection.

(5) Operations program.

(a) For each water treatment facility treating a surface or GWI source, the purveyor shall develop an operations program and make it available to the department for review upon request.

(b) The program shall be submitted to the department as an addendum to the purveyor's water system plan (WAC 246-290-100) or small water system management program (WAC 246-290-105).

(c) The program shall detail how the purveyor will produce optimal filtered water quality at all times the water treatment facility produces water to be served to the public.

(d) The purveyor shall operate the water treatment facility in accordance with the operations program.

(e) The operations program shall include, but not be limited to, a description of:

(i) For conventional, direct or in-line filtration, procedures used to determine and maintain optimized coagulation as demonstrated by meeting the requirements of WAC 246-290-654(3);

(ii) Procedures used to determine chemical dose rates;

(iii) How and when each unit process is operated;

(iv) Unit process equipment maintenance program;

(v) Treatment plant performance monitoring program;

(vi) Laboratory procedures;

(vii) Records;

(viii) Reliability features; and

(ix) Response plans for water treatment facility emergencies, including disinfection failure and watershed emergencies.

(f) The purveyor shall ensure the operations program is:

(i) Readily available at the water treatment facility for use by operators and for department inspection;

(ii) Consistent with department guidelines for operations procedures such as those described in department guidance on surface water treatment and water system planning; and

(iii) Updated as needed to reflect current water treatment facility operations.

(6) Pressure filters. Purveyors using pressure filters shall:

(a) Inspect and evaluate the filters, at least every six months, for conditions that would reduce their effectiveness in removing *Giardia lamblia* cysts;

(b) Maintain, and make available for department review, a written record of pressure filter inspections; and

(c) Be prepared to conduct filter inspections in the presence of a department representative, if requested.

[Statutory Authority: RCW 70.119A.180 and 43.20.050. 08-03-061, § 246-290-654, filed 1/14/08, effective 2/14/08. Statutory Authority: RCW 43.20.-050 (2) and (3) and 70.119A.080. 03-08-037, § 246-290-654, filed 3/27/03, effective 4/27/03. Statutory Authority: RCW 43.02.050 [43.20.050]. 99-07-021, § 246-290-654, filed 3/9/99, effective 4/9/99. Statutory Authority: RCW 43.20.050. 94-14-001, § 246-290-654, filed 6/22/94, effective 7/23/94; 93-08-011 (Order 352B), § 246-290-654, filed 3/25/93, effective 4/25/93.]

WAC 246-290-660 Filtration. (1) Turbidity performance requirements.

(a) The purveyor shall ensure that the turbidity level of representative filtered water samples:

(i) Complies with the performance standards in Table 11;

(ii) Never exceeds 5.0 NTU for any system using slow sand, diatomaceous earth;

(iii) Never exceeds 1.0 NTU for any system using conventional, direct, or in-line filtration; and

(iv) Never exceeds the maximum allowable turbidity determined by the department on a case-by-case basis for any system using an alternative filtration technology approved under WAC 246-290-676 (2)(b).

Table 11
TURBIDITY PERFORMANCE STANDARDS

Filtration Technology	Filtered water turbidity (in NTUs) shall be less than or equal to this value in at least 95% of the measurements made each calendar month
Conventional, Direct and In-line	0.30
Slow Sand	1.0
Diatomaceous Earth	1.0
Alternative Technology	As determined by the department through case-by-case approval of technology, under WAC 246-290-676 (2)(b).

(b) The department may allow the turbidity of filtered water from a system using slow sand filtration to exceed 1.0 NTU, but never 5.0 NTU, if the system demonstrates to the department's satisfaction that the higher turbidity level will not endanger the health of consumers served by the system. As a condition of being allowed to produce filtered water with a turbidity exceeding 1.0 NTU, the purveyor may be required to monitor one or more parameters in addition to the parameters specified under WAC 246-290-664. The department shall notify the purveyor of the type and frequency of monitoring to be conducted.

(2) *Giardia lamblia*, *Cryptosporidium*, and virus removal credit.

(a) The department shall notify the purveyor of the removal credit granted for the system's filtration process. The department shall specify removal credit for:

(i) Existing filtration facilities based on periodic evaluations of performance and operation; and

(ii) New or modified filtration facilities based on results of pilot plant studies or full scale operation.

(b) Conventional, direct, and in-line filtration.

(i) The removal credit the department may grant to a system using conventional, direct, or in-line filtration and demonstrating effective treatment is as follows:

Filtration Technology	Percent Removal Credit (log)					
	Giardia		Virus		*Cryptosporidium*	
	Percent	log	Percent	log	Percent	log
Conventional	99.7	2.5	99	2.0	99	2.0
Direct and in-line	99	2.0	90	1.0	99	2.0

(ii) A system using conventional, direct, or in-line filtration shall be considered to provide effective treatment, if the purveyor demonstrates to the satisfaction of the department that the system meets the:

(A) Turbidity performance requirements under subsection (1) of this section; and

(B) Operations requirements of WAC 246-290-654.

(iii) The department shall not grant removal credit to a system using conventional, direct, or in-line filtration that:

(A) Fails to meet the minimum turbidity performance requirements under subsection (1) of this section; or

(B) Fails to meet the operating requirements under WAC 246-290-654.

(c) Slow sand filtration.

The department may grant a system using slow sand filtration 99 percent (2 log) *Giardia lamblia* cyst and *Cryptosporidium* oocyst removal credit and 99 percent (2 log) virus removal credit, if the system meets the department design requirements under WAC 246-290-676 and meets the minimum turbidity performance requirements in subsection (1) of this section.

(d) Diatomaceous earth filtration.

The department may grant a system using diatomaceous earth filtration 99 percent (2 log) *Giardia lamblia* cyst and *Cryptosporidium* oocyst removal credit and 90 percent (1 log) virus removal credit, if the system meets the department design requirements under WAC 246-290-676 and meets the minimum turbidity performance requirements in subsection (1) of this section.

(e) Alternative filtration technology.

The department shall grant, on a case-by-case basis, *Giardia lamblia* cyst, *Cryptosporidium* oocyst, and virus removal credit for systems using alternative filtration technology based on results of product testing acceptable to the department.

(f) The purveyor granted no *Giardia lamblia* cyst removal credit and no *Cryptosporidium* oocyst removal credit shall:

(i) Provide treatment under WAC 246-290-662 (2)(d); and

(ii) Within ninety days of department notification regarding removal credit, submit an action plan to the department for review and approval. The plan shall:

(A) Detail how the purveyor plans to comply with the turbidity performance requirements in subsection (1) of this section and operating requirements of WAC 246-290-654; and

(B) Identify the proposed schedule for implementation.

(iii) Be considered in violation of the treatment technique specified in WAC 246-290-632 (2)(a)(i) and shall take follow-up action specified in WAC 246-290-634.

(g) Higher level removal credit.

(i) The department may grant a higher level of *Giardia lamblia*, *Cryptosporidium*, and virus removal credit than listed under (b) through (e) of this subsection, if the purveyor demonstrates to the department's satisfaction that the higher level can be consistently achieved.

(ii) As a condition of maintaining the maximum removal credit, purveyors may be required to periodically monitor one or more parameters not routinely monitored under WAC 246-290-664. The department shall notify the purveyor of the type and frequency of monitoring to be conducted.

(3) Disinfection by-product precursor removal requirements.

(a) Conventional systems using sedimentation shall meet the treatment technique requirements for control of disinfection by-product precursors specified in 40 CFR 141.135.

(i) Applicability of this requirement shall be determined in accordance with 40 CFR 141.135(a).

(ii) Enhanced coagulation and enhanced softening shall be provided in accordance with 40 CFR 141.135(b), if applicable.

(iii) Compliance with the treatment technique requirements for control of disinfection by-product precursors shall be determined in accordance with 40 CFR 141.135(c).

(b) For the purposes of compliance with (a) of this subsection, sedimentation shall be considered applicable when:

(i) Surface overflow rates and other design parameters are in conformance with traditionally accepted industry standards and textbook values, such as those prescribed in nationally accepted standards, including the most recent version of the *Recommended Standards for Water Works, A Committee Report of the Great Lakes - Upper Mississippi River Board of State Public Health and Environmental Managers*; and

(ii) The system has received pathogen removal credit for the sedimentation basin.

(4) Filter backwash recycling requirements.

(a) By no later than December 8, 2003, purveyors using conventional, direct, or in-line filtration must **report** to the department, in writing, whether they recycle spent filter backwash water, thickener supernatant, or liquids from dewatering processes within the treatment plant.

(i) Purveyors that **do** recycle spent filter backwash water, thickener supernatant, or liquids from dewatering processes must also report the following information:

(A) A plant schematic showing the origin of all flows that are recycled (including, but not limited to, spent filter backwash water, thickener supernatant, and liquids from dewatering processes), the hydraulic conveyance (i.e., pipe, open channel) used to transport them, and the location where they are reintroduced back into the treatment plant.

(B) Typical recycle flow in gallons per minute (gpm), the highest observed plant flow experienced in the previous year (gpm), design flow for the treatment plant (gpm), and the approved operating capacity for the plant.

(b) By no later than June 8, 2004, purveyors using conventional, direct, or in-line filtration that recycle spent filter backwash water, thickener supernatant, or liquids from dewatering processes within the treatment plant shall:

(i) Return the recycled flow prior to, or concurrent with the location where primary coagulant is introduced into the flow stream.

(ii) By no later than June 8, 2006, complete any capital improvements (physical modifications requiring engineering planning, design, and construction) necessary to meet the requirements of (b)(i) of this subsection.

(iii) On a case-by-case basis, the department may approve an alternate location for the return of recycle flows.

[Statutory Authority: RCW 70.119A.180 and 43.20.050. 08-03-061, § 246-290-660, filed 1/14/08, effective 2/14/08. Statutory Authority: RCW 43.20.-050 and 70.119A.080. 04-04-056, § 246-290-660, filed 1/30/04, effective

3/1/04. Statutory Authority: RCW 43.20.050 (2) and (3) and 70.119A.080. 03-08-037, § 246-290-660, filed 3/27/03, effective 4/27/03. Statutory Authority: RCW 43.02.050 [43.20.050]. 99-07-021, § 246-290-660, filed 3/9/99, effective 4/9/99. Statutory Authority: RCW 43.20.050. 94-14-001, § 246-290-660, filed 6/22/94, effective 7/23/94; 93-08-011 (Order 352B), § 246-290-660, filed 3/25/93, effective 4/25/93.]

WAC 246-290-662 Disinfection for filtered systems. (1) General requirements.

(a) The purveyor shall provide continuous disinfection to ensure that filtration and disinfection together achieve, at all times the system serves water to the public, at least the following:

(i) 99.9 percent (3 log) inactivation and removal of *Giardia lamblia* cysts; and

(ii) 99.99 percent (4 log) inactivation and/or removal of viruses.

(b) Where sources receive sewage discharges and/or agricultural runoff, purveyors may be required to provide greater levels of removal and inactivation of *Giardia lamblia* cysts and viruses to protect the health of consumers served by the system.

(c) Regardless of the removal credit granted for filtration, purveyors shall, at a minimum, provide continuous disinfection to achieve at least 68 percent (0.5 log) inactivation of *Giardia lamblia* cysts and 99 percent (2 log) inactivation of viruses.

(2) Establishing the level of inactivation.

(a) The department shall establish the level of disinfection (log inactivation) to be provided by the purveyor.

(b) The required level of inactivation shall be based on source quality and expected levels of *Giardia lamblia* cyst and virus removal achieved by the system's filtration process.

(c) Based on periodic reviews, the department may adjust, as necessary, the level of disinfection the purveyor shall provide to protect the health of consumers served by the system.

(d) Systems granted no *Giardia lamblia* cyst removal credit and no *Cryptosporidium* oocyst removal credit shall:

(i) Unless directed otherwise by the department, provide interim disinfection to:

(A) Ensure compliance with the monthly coliform MCL under WAC 246-290-310;

(B) Achieve at least 99.9 percent (3 log) inactivation of *Giardia lamblia* cysts; and

(C) Maintain a detectable residual disinfectant concentration, or an HPC level less than 500 organisms/ml, within the distribution system in accordance with subsection (6) of this section.

(ii) Comply with the interim disinfection requirements until the system can demonstrate to the department's satisfaction that it complies with the operating requirements and turbidity performance requirements under WAC 246-290-654 and 246-290-660(1), respectively.

(3) Determining the level of inactivation.

(a) Unless the department has approved a reduced CT monitoring schedule for the system, each day the system serves water to the public, the purveyor, using procedures and CT values acceptable to the department such as those presented in department guidance of surface water treatment, shall determine:

(i) CTcalc values using the system's treatment parameters and calculate the total inactivation ratio achieved by disinfection; and

(ii) Whether the system's disinfection process is achieving the minimum levels of inactivation of *Giardia lamblia* cysts and viruses required by the department.

(b) The department may allow a purveyor to determine the level of inactivation using lower CT values than those specified in (a) of this subsection, provided the purveyor demonstrates to the department's satisfaction that the required levels of inactivation of *Giardia lamblia* cysts and viruses can be achieved.

(4) Determining compliance with the required level of inactivation.

(a) A purveyor shall be considered in compliance with the inactivation requirement when a total inactivation ratio equal to or greater than 1.0 is achieved.

(b) Failure to provide the required level of inactivation on more than one day in any calendar month shall be considered a treatment technique violation.

(5) Residual disinfectant concentration entering the distribution system.

(a) The purveyor shall ensure that all water entering the distribution system contains a residual disinfectant concentration, measured as free or combined chlorine, of at least 0.2 mg/L at all times the system serves water to the public; and

(b) Failure to provide a 0.2 mg/L residual at entry to distribution for more than four hours on any day shall be considered a treatment technique violation.

(6) Residual disinfectant concentration within the distribution system.

(a) The purveyor shall ensure that the residual disinfectant concentration in the distribution system, measured as total chlorine, free chlorine, combined chlorine, or chlorine dioxide, is detectable in at least ninety-five percent of the samples taken each calendar month.

(b) Water in the distribution system with an HPC less than or equal to 500 organisms/ml is considered to have a detectable residual disinfectant concentration for the purposes of compliance with WAC 246-290-662 (6)(a).

[Statutory Authority: RCW 43.20.050 (2) and (3) and 70.119A.080. 03-08-037, § 246-290-662, filed 3/27/03, effective 4/27/03. Statutory Authority: RCW 43.02.050 [43.20.050]. 99-07-021, § 246-290-662, filed 3/9/99, effective 4/9/99. Statutory Authority: RCW 43.20.050. 94-14-001, § 246-290-662, filed 6/22/94, effective 7/23/94; 93-08-011 (Order 352B), § 246-290-662, filed 3/25/93, effective 4/25/93.]

WAC 246-290-664 Monitoring for filtered systems. (1) Source coliform monitoring.

(a) The purveyor shall ensure that source water samples of each surface or GWI source are:

(i) Collected before the first point of disinfectant application and before coagulant chemical addition; and

(ii) Analyzed for fecal coliform density in accordance with methods acceptable to the department.

(b) At a minimum, the purveyor shall ensure source samples are collected for fecal coliform analysis at a frequency equal to ten percent of the number of routine coliform samples collected within the distribution system each month under WAC 246-290-300, or once per calendar month, whichever is greater up to a maximum of one sample per day.

(c) With written approval from the department, purveyors of filtered water systems serving less than ten thousand people may collect twenty-six consecutive monthly fecal coliform samples instead of collecting *E. coli* samples every two weeks for twelve months as specified in 40 CFR 141.701 (a)(3)(i). The fecal coliform levels that will trigger *Cryptosporidium* monitoring will be the same as the *E. coli* levels specified in 40 CFR 141.701 (a)(4)(i), (ii), or (iv).

(2) Source turbidity monitoring.

(a) The purveyor using conventional, direct, or in-line filtration shall measure source turbidity at least once per day on a representative sample collected before disinfection and coagulant addition.

(b) Grab sampling or continuous turbidity monitoring and recording may be used to meet the requirement specified in (a) of this subsection.

(c) Purveyors using continuous turbidity monitoring shall record continuous turbidity measurements at equal intervals, at least every four hours, in accordance with a department-approved sampling schedule.

(d) Purveyors using an approved alternative filtration technology may be required to monitor source water turbidity at least once per day on a representative sample as determined by the department.

(3) Filtered water turbidity monitoring.

(a) The purveyor using direct, conventional, or in-line filtration shall:

(i) Continuously monitor turbidity on representative samples from each individual filter unit and from the system's combined filter effluent, prior to clearwell storage;

(ii) For systems serving at least ten thousand people, record continuous turbidity measurements from each individual filter unit at equal intervals of at least every fifteen minutes, and for all systems, from the combined filter effluent at equal intervals of at least every four hours, in accordance with a department-approved sampling schedule;

(iii) Beginning January 14, 2005, systems serving less than ten thousand people shall record continuous turbidity measurements from each individual filter unit at equal intervals of at least every fifteen minutes;

(iv) Systems serving less than ten thousand people and consisting of two or fewer filters may record continuous turbidity measurements from the combined filter effluent at equal intervals of at least fifteen minutes in lieu of recording individual filter turbidity measurements; and

(v) Conduct monitoring in accordance with the analytical techniques under WAC 246-290-638.

(b) The purveyor using slow sand or diatomaceous earth filtration shall:

(i) Continuously monitor turbidity on representative samples from each individual filter unit and from the system's combined filter effluent, prior to clearwell storage;

(ii) Record continuous turbidity measurements from the combined filter effluent at equal intervals of at least every four hours in accordance with a department-approved sampling schedule; and

(iii) Conduct monitoring in accordance with the analytical techniques under WAC 246-290-638.

(c) Purveyors using an alternative filtration technology approved under WAC 246-290-676 shall provide monitoring in accordance with the technology-specific approval conditions determined by the department.

(d) Purveyors using slow sand filtration or an alternative filtration technology may reduce filtered water turbidity monitoring to one grab sample per day with department approval. Reduced turbidity monitoring shall be allowed only where the purveyor demonstrates to the department's satisfaction that a reduction in monitoring will not endanger the health of consumers served by the water system.

(4) Monitoring the level of inactivation and removal.

(a) Each day the system is in operation, the purveyor shall determine the total level of inactivation and removal of *Giardia lamblia* cysts, viruses, and *Cryptosporidium* oocysts achieved.

(b) The purveyor shall determine the total level of inactivation and removal based on:

(i) *Giardia lamblia* cyst, *Cryptosporidium* oocyst, and virus removal credit granted by the department for filtration; and

(ii) Level of inactivation of *Giardia lamblia* cysts and viruses achieved through disinfection.

(c) At least once per day, purveyors shall monitor the following to determine the level of inactivation achieved through disinfection:

(i) Temperature of the disinfected water at each residual disinfectant concentration sampling point used for CT calculations; and

(ii) If using chlorine, pH of the disinfected water at each chlorine residual disinfectant concentration sampling point used for CT calculations.

(d) Each day during peak hourly flow (based on historical information), the purveyor shall:

(i) Determine disinfectant contact time, T, to the point at which C is measured; and

(ii) Measure the residual disinfectant concentration, C, of the water at the point for which T is calculated. The C measurement point shall be located before or at the first consumer.

(e) The department may reduce CT monitoring requirements for purveyors that demonstrate to the department's satisfaction that the required levels of inactivation are consistently exceeded. Reduced CT monitoring shall only be allowed where the purveyor demonstrates to the department's satisfaction that a reduction in monitoring will not endanger the health of consumers.

(5) Monitoring the residual disinfectant concentration entering the distribution system.

(a) Systems serving more than thirty-three hundred people per month.

(i) The purveyor shall continuously monitor and record the residual disinfectant concentration of water entering the distribution system and report the lowest value each day.

(ii) If the continuous monitoring equipment fails, the purveyor shall measure the residual disinfectant concentration on grab samples collected at least every four hours at the entry to the distribution system while the equipment is being repaired or replaced. The purveyor shall have continuous monitoring equipment back on-line within five working days following failure.

(b) Systems serving thirty-three hundred or less people per month.

(i) The purveyor shall collect grab samples or use continuous monitoring and recording to measure the residual disinfectant concentration entering the distribution system.

(ii) Purveyors of **community** systems choosing to take grab samples shall collect:

(A) Samples at the following minimum frequencies:

Population Served	Number/day
25 - 500	1
501 - 1,000	2
1,001 - 2,500	3
2,501 - 3,300	4

(B) At least one of the grab samples at peak hourly flow; and

(C) The remaining samples evenly spaced over the time the system is disinfecting water that will be delivered to the public.

(iii) Purveyors of **noncommunity** systems choosing to take grab samples shall collect samples for disinfectant residual concentration entering the distribution system as directed by the department.

(iv) When grab samples are collected and the residual disinfectant concentration at the entry to distribution falls below 0.2 mg/L, purveyors shall collect a grab sample every four hours until the residual disinfectant concentration is 0.2 mg/L or more.

(6) Monitoring residual disinfectant concentrations within the distribution system.

(a) The purveyor shall measure the residual disinfectant concentration at representative points within the distribution system on a daily basis or as otherwise approved by the department.

(b) At a minimum, the purveyor shall measure the residual disinfectant concentration within the distribution system at the same time and location that a routine or repeat coliform sample is collected under WAC 246-290-300(3) or 246-290-320(2).

(c) The purveyor may measure HPC within the distribution system in lieu of measuring the residual disinfectant concentration under this subsection.

[Statutory Authority: RCW 70.119A.180 and 43.20.050. 08-03-061, § 246-290-664, filed 1/14/08, effective 2/14/08. Statutory Authority: RCW 43.20.-050 and 70.119A.080. 04-04-056, § 246-290-664, filed 1/30/04, effective 3/1/04. Statutory Authority: RCW 43.20.050 (2) and (3) and 70.119A.080. 03-08-037, § 246-290-664, filed 3/27/03, effective 4/27/03. Statutory Authority: RCW 43.02.050 [43.20.050]. 99-07-021, § 246-290-664, filed 3/9/99, effective 4/9/99. Statutory Authority: RCW 43.20.050. 94-14-001, § 246-290-664, filed 6/22/94, effective 7/23/94; 93-08-011 (Order 352B), § 246-290-664, filed 3/25/93, effective 4/25/93.]

WAC 246-290-666 Reporting for filtered systems. (1) The purveyor shall notify the department, as soon as possible, but no later than twenty-four hours after the purveyor learns of the following events:

(a) A waterborne disease outbreak potentially attributable to the water system occurs;

(b) The turbidity of the combined filter effluent exceeds 5.0 NTU at any time for any system using slow sand, diatomaceous earth, or for any system serving less than ten thousand people and using conventional, direct, or in-line filtration;

(c) The turbidity of the combined filter effluent:

(i) Exceeds 1.0 NTU at any time for a system serving at least ten thousand people and using conventional, direct, or in-line filtration;

(ii) Beginning January 14, 2005, the turbidity of the combined filter effluent exceeds 1.0 NTU at any time for a system serving less than ten thousand people using conventional, direct, or in-line filtration;

(d) The turbidity of the combined filter effluent exceeds the maximum specified level for an alternative filtration technology approved by the department;

(e) The residual disinfection concentration falls below 0.2 mg/L at the entry point to the distribution system. The purveyor shall also report whether the residual was restored to 0.2 mg/L or more within four hours; or

(f) An event occurs that may affect the ability of the water treatment facility to produce drinking water that complies with this chapter including, but not limited to:

(i) Spills of hazardous materials in the watershed; and

(ii) Treatment process failures.

(2) The purveyor shall report results of monitoring conducted in accordance with WAC 246-290-664 to the department. Monthly report forms shall be submitted within ten days after the end of each month the system served water to the public.

(3) The purveyor shall report, at a minimum, all the information requested by the department using a department-approved form or format including:

(a) Water treatment facility operations information;

(b) Turbidity monitoring results, including:

(i) Source monitoring, if required under WAC 246-290-664(2);

(ii) Combined filter effluent. Continuous measurements shall be reported at equal intervals, at least every four hours, in accordance with a department-approved schedule;

(iii) Individual filter turbidity monitoring results. Systems serving at least ten thousand people and using conventional, direct, or in-line filtration shall report and take follow-up action as prescribed in 40 CFR 141.175(b). Beginning January 14, 2005, systems serving less than ten thousand people shall report and take follow-up action as prescribed by 40 CFR 141.563 and 141.570. Required follow-up action may include development of a filter profile, a filter self-assessment, as described in 40 CFR 141.175 (b)(3) and 141.563(b), or the completion of a comprehensive performance evaluation (CPE).

(c) Disinfection monitoring information including:

(i) Level of inactivation achieved;

(ii) Residual disinfectant concentrations entering the distribution system; and

(iii) Residual disinfectant concentrations within the distribution system.

(d) Total level of removal and inactivation; and

(e) A summary of water quality complaints received from consumers served by the water system.

(4) A person certified under chapter 246-292 WAC shall complete and sign the monthly report forms required in this section.

[Statutory Authority: RCW 43.20.050 and 70.119A.080. 04-04-056, § 246-290-666, filed 1/30/04, effective 3/1/04. Statutory Authority: RCW 43.20.-050 (2) and (3) and 70.119A.080. 03-08-037, § 246-290-666, filed 3/27/03, effective 4/27/03. Statutory Authority: RCW 43.02.050 [43.20.050]. 99-07-

021, § 246-290-666, filed 3/9/99, effective 4/9/99. Statutory Authority: RCW 43.20.050. 94-14-001, § 246-290-666, filed 6/22/94, effective 7/23/94; 93-08-011 (Order 352B), § 246-290-666, filed 3/25/93, effective 4/25/93.]

WAC 246-290-668 Watershed control. (1) The purveyor shall, to the extent possible, exercise surveillance over conditions and activities in the watershed affecting source water quality. The purveyor shall develop and implement a department-approved watershed control program.

(2) The purveyor shall ensure that an evaluation of the watershed is completed at least every six years. Watershed evaluations shall be performed such that results of the survey are included in the purveyor's water system plan in accordance with WAC 246-290-100 or small water system management program in accordance with WAC 246-290-105, whichever is applicable.

(3) A professional engineer registered in the state of Washington shall direct the conduct of the watershed evaluation and develop a watershed evaluation report.

(4) The purveyor shall submit the report to the department within sixty days of completion of the watershed evaluation.

(5) The report shall describe the watershed, characterize the watershed hydrology, and discuss the purveyor's watershed control program. The report shall also describe:

(a) Conditions/activities in the watershed that are adversely affecting source water quality;

(b) Changes in the watershed that could adversely affect source water quality that have occurred since the last watershed evaluation;

(c) The monitoring program the purveyor uses to assess the adequacy of watershed protection including an evaluation of sampling results; and

(d) Recommendations for improved watershed control.

[Statutory Authority: RCW 43.02.050 [43.20.050]. 99-07-021, § 246-290-668, filed 3/9/99, effective 4/9/99. Statutory Authority: RCW 43.20.050. 93-08-011 (Order 352B), § 246-290-668, filed 3/25/93, effective 4/25/93.]

Subpart C - Requirements for Systems Installing Filtration Facilities

WAC 246-290-670 Compliance requirements for existing unfiltered systems installing filtration. (1) The purveyor of an existing unfiltered system shall:

(a) Install filtration within eighteen months after department notification; and

(b) Be subject to the interim compliance requirements as determined by the department and in conformance with 40 CFR 141.13 and WAC 246-290-632.

(2) The purveyor under an enforcement action or compliance agreement that is dated prior to the effective date of Part 6 of chapter 246-290 WAC, shall adhere to the compliance schedule for installation of filtration established in the departmental order or bilateral compliance agreement in lieu of the dates specified in subsection (1) of this section.

(3) The purveyor required to install filtration shall submit an action plan and schedule to the department for review and approval. The plan shall:

(a) Be submitted within ninety days of departmental notification; and

(b) Document the purveyor's plan and implementation schedule to comply with one of the following:

(i) Subparts A and B of Part 6 of chapter 246-290 WAC, if continuing to use the surface or GWI source as a permanent source and installing filtration;

(ii) Subparts A and D of Part 6 of chapter 246-290 WAC, if abandoning the surface or GWI source and purchasing completely treated water from a department-approved public water system using surface or GWI water; or

(iii) All other applicable sections of this chapter, if abandoning the surface or GWI source and developing an alternate department-approved ground water source.

(4) Between written departmental notification of the filtration requirement and installation of filtration, the purveyor shall meet:

(a) The interim disinfection requirements under WAC 246-290-672 or as otherwise directed by the department;

(b) The interim monitoring and reporting requirements under WAC 246-290-674; and

(c) All other applicable requirements of this chapter.

(5) The purveyor installing filtration shall ensure that when completed, the final treatment processes, consisting of filtration and disinfection, will comply with the requirements under WAC 246-290-660 and 246-290-662, respectively.

[Statutory Authority: RCW 43.02.050 [43.20.050]. 99-07-021, § 246-290-670, filed 3/9/99, effective 4/9/99. Statutory Authority: RCW 43.20.050. 94-14-001, § 246-290-670, filed 6/22/94, effective 7/23/94; 93-08-011 (Order 352B), § 246-290-670, filed 3/25/93, effective 4/25/93.]

WAC 246-290-672 Interim treatment requirements. (1) Purveyors of existing unfiltered systems installing filtration shall provide interim disinfection treatment to:

(a) Ensure compliance with the monthly coliform MCL under WAC 246-290-310;

(b) Achieve inactivation levels of *Giardia lamblia* cysts on a daily basis each month the system serves water to the public as directed by the department; and

(c) Maintain a detectable residual disinfectant concentration in the distribution system, measured as total chlorine, free chlorine, or combined chlorine in 95 percent or more of the samples taken each calendar month. Water in the distribution system with an HPC level less than or equal to 500 organisms/ml is considered to have a detectable residual disinfectant concentration for the purposes of compliance with this subsection.

(2) Failure to provide the required level of inactivation in subsection (1)(b) of this section on more than one day in any calendar month shall be considered a treatment technique violation.

(3) The department may require the purveyor to provide higher levels of treatment than specified in subsection (1)(b) of this section when necessary to protect the health of consumers served by the public water system.

(4) Interim treatment requirements shall be met in accordance with a schedule acceptable to the department.

[Statutory Authority: RCW 43.20.050 (2) and (3) and 70.119A.080. 03-08-037, § 246-290-672, filed 3/27/03, effective 4/27/03. Statutory Authority: RCW 43.02.050 [43.20.050]. 99-07-021, § 246-290-672, filed 3/9/99, effective 4/9/99. Statutory Authority: RCW 43.20.050. 93-08-011 (Order 352B), § 246-290-672, filed 3/25/93, effective 4/25/93.]

WAC 246-290-674 Interim monitoring and reporting. (1) Monitoring. Unless directed otherwise by the department, the purveyor of an existing unfiltered system installing filtration shall:

(a) Conduct interim monitoring in accordance with 40 CFR 141.22;

(b) Measure the residual disinfectant concentration within the distribution system at the same time and location that a routine or repeat sample is collected in accordance with WAC 246-290-300(3) or 246-290-320(2); and

(c) Measure residual disinfection concentrations at entry to the distribution system on a daily basis, or as directed by the department.

(2) Reporting.

(a) The purveyor installing filtration shall report to the department as soon as possible, but no later than twenty-four hours after the purveyor learns of any of the following events:

(i) A waterborne disease outbreak potentially attributable to the water system occurs;

(ii) The turbidity of water delivered to the public exceeds 5.0 NTU; or

(iii) The interim disinfection requirements under WAC 246-290-672 are not met.

(b) The purveyor shall report results of monitoring to the department. Monthly report forms shall be submitted within ten days after the end of each month the system served water to the public.

(c) The purveyor shall report, at a minimum, all the information requested by the department using a department-approved form or format including:

(i) Water quality information, including results of monitoring in accordance with WAC 246-290-300 and 246-290-320;

(ii) Disinfection monitoring information;

(iii) A summary of water quality complaints received from consumers served by the system.

[Statutory Authority: RCW 43.20.050 (2) and (3) and 70.119A.080. 03-08-037, § 246-290-674, filed 3/27/03, effective 4/27/03. Statutory Authority: RCW 43.02.050 [43.20.050]. 99-07-021, § 246-290-674, filed 3/9/99, effective 4/9/99. Statutory Authority: RCW 43.20.050. 93-08-011 (Order 352B), § 246-290-674, filed 3/25/93, effective 4/25/93.]

WAC 246-290-676 Filtration technology and design criteria. (1) General.

(a) The purveyor proposing to construct new water treatment facilities or to make additions to existing water treatment facilities for surface and GWI sources shall ensure that the facilities comply with the treatment, design, and reliability requirements of Part 6 of chapter 246-290 WAC.

(b) The purveyor shall submit an engineering report to the department describing how the treatment facilities will be designed to comply with the requirements specified in Subparts A, B, and C of Part 6 of chapter 246-290 WAC.

(2) Filtration technology.

(a) The purveyor shall select a filtration technology acceptable to the department using criteria such as those outlined in department guidance on surface water treatment. The following filtration technologies are considered acceptable:

(i) Conventional;

(ii) Direct;

(iii) Diatomaceous earth; and

(iv) Slow sand.

(b) In addition to the technologies specified in subsection (2)(a) of this section, alternative filtration technologies may be acceptable, if the purveyor demonstrates to the department's satisfaction all of the following:

(i) Through acceptable third party testing, that system components do not leach or otherwise add substances to the finished water that would violate drinking water standards, or otherwise pose a threat to public health;

(ii) The technology's effectiveness in achieving at least 99 percent (2 log) removal of *Giardia lamblia* cysts or cyst surrogate particles, and at least 99 percent (2 log) removal of *Cryptosporidium* oocysts or oocyst surrogate particles. The purveyor shall further demonstrate the technology's removal capability through research conducted:

(A) By a party acceptable to the department; and

(B) In accordance with protocol and standards acceptable to the department.

(iii) Through on-site pilot plant studies or other means, that the filtration technology:

(A) In combination with disinfection treatment consistently achieves 99.9 percent (3 log) removal and inactivation of *Giardia lamblia* cysts and 99.99 percent (4 log) removal and inactivation of viruses; and

(B) Meets the applicable turbidity performance requirements as determined by the department for the specific treatment process being considered, but in no case to exceed 1.0 NTU for the finished water.

(3) Pilot studies.

(a) The purveyor shall ensure pilot studies are conducted for all proposed filtration facilities, except where waived based on engineering justification acceptable to the department.

(b) The purveyor shall obtain department approval for the pilot study plan before the pilot filter is constructed and before the pilot study is undertaken.

(c) The pilot study plan shall identify at a minimum:

(i) Pilot filter design;

(ii) Water quality and operational parameters to be monitored;

(iii) Type of data to be collected, frequency of data collection, and length of pilot study; and

(iv) Pilot plant operator qualifications.

(d) The purveyor shall ensure that the pilot study is:

(i) Conducted to simulate proposed full-scale design conditions;

(ii) Conducted over a time period that will demonstrate the effectiveness and reliability of the proposed treatment system during changes in seasonal and climatic conditions; and

(iii) Designed and operated in accordance with good engineering practices and that ANSI/NSF standards 60 and 61 are considered.

(e) When the pilot study is complete, the purveyor shall submit a project report to the department for approval under WAC 246-290-110.

(4) Design criteria.

(a) The purveyor shall ensure that water treatment facilities for surface and GWI sources are designed and constructed in accordance with good engineering practices docu-

mented in references such as those identified in WAC 246-290-200.

(b) Filtration facilities.

(i) The purveyor shall ensure that all new filtration facilities and improvements to any existing filtration facilities (excluding disinfection) are designed to achieve at least 99 percent (2 log) removal of *Giardia lamblia* cysts, and 99 percent (2 log) removal of *Cryptosporidium* oocysts; and

(ii) The purveyor shall ensure that all new filtration facilities contain provisions for filtering to waste with appropriate measures for backflow prevention.

(c) The purveyor shall ensure that disinfection systems for new filtration facilities or improvements to existing disinfection facilities are designed to meet the requirements of WAC 246-290-662.

[Statutory Authority: RCW 70.119A.180 and 43.20.050. 08-03-061, § 246-290-676, filed 1/14/08, effective 2/14/08. Statutory Authority: RCW 43.20.050 (2) and (3) and 70.119A.080. 03-08-037, § 246-290-676, filed 3/27/03, effective 4/27/03. Statutory Authority: RCW 43.02.050 [43.20.050]. 99-07-021, § 246-290-676, filed 3/9/99, effective 4/9/99. Statutory Authority: RCW 43.20.050. 93-08-011 (Order 352B), § 246-290-676, filed 3/25/93, effective 4/25/93.]

WAC 246-290-678 Reliability for filtered systems. (1) The purveyor shall ensure that reliability features are included in all water treatment facilities used to treat surface or GWI sources.

(2) Reliability features shall include but not be limited to:

(a) Alarm devices to provide warning of treatment process failures including coagulation, filtration, and disinfection. Alarm devices shall warn individuals responsible for taking corrective action and/or provide for automatic plant shutdown until corrective action can be taken;

(b) Standby replacement equipment available to assure continuous operation and control of coagulation, clarification, filtration and disinfection processes;

(c) Multiple filter units that provide redundant capacity when filters are out of service for backwash or maintenance, except where waived based on engineering justification acceptable to the department.

(3) The department may accept alternatives to the requirements specified in subsection (2) of this section, if the purveyor demonstrates to the department's satisfaction that the proposed alternative will assure an equal degree of reliability.

[Statutory Authority: RCW 43.02.050 [43.20.050]. 99-07-021, § 246-290-678, filed 3/9/99, effective 4/9/99. Statutory Authority: RCW 43.20.050. 93-08-011 (Order 352B), § 246-290-678, filed 3/25/93, effective 4/25/93.]

Subpart D - Requirements for Other Unfiltered Systems

WAC 246-290-686 Compliance requirements for unfiltered systems. (1) The purveyor using an unfiltered surface or GWI source shall comply with:

(a) Subparts A and D of Part 6 of chapter 246-290 WAC; and

(b) All other applicable sections of this chapter.

(2) The purveyor purchasing water from a system using a surface or GWI source shall comply with:

(a) The applicable requirements of Subpart A of Part 6 of chapter 246-290 WAC;

(b) The disinfection, monitoring and reporting requirements under WAC 246-290-692 (5)(b), 246-290-694 (8)(b) and 246-290-696(4) respectively when purchasing completely treated surface or GWI water; or

(c) The treatment technique, monitoring and reporting requirements as directed by the department when the purveyor is purchasing incompletely treated surface or GWI water.

(3) The purveyor using an unfiltered GWI source shall be subject to the effective dates, compliance requirements, and violations specified in Table 12.

Table 12
COMPLIANCE REQUIREMENTS FOR SYSTEMS USING UNFILTERED GWI SOURCES

REQUIREMENTS BECOME EFFECTIVE	APPLICABLE PART 6 REQUIREMENTS	VIOLATION TYPE	
		Turbidity MCL	Treatment Technique
Six months after GWI determination	Only Analytical, Monitoring and Reporting Requirements (WAC 246-290-638, 246-290-694 and 246-290-696 respectively)	Refer to 40 CFR 141.13 and 141.22	Not in effect yet
Eighteen months after GWI determination	Subparts A and D	No longer in effect	In effect as defined in WAC 246-290-632

(4) Purveyors of **community** systems using surface water sources had the option to remain unfiltered if they demonstrated compliance with the department's criteria to remain unfiltered by December 30, 1991.

(5) A purveyor that served water to the public before January 1, 1991, using a GWI source may have that source remain unfiltered, if, within eighteen months of GWI determination, the purveyor complies with Part 6 of this chapter and, the source water quality and site-specific conditions under WAC 246-290-690 or 246-290-691 as demonstrated through monitoring conducted in accordance with WAC 246-290-694.

(6) The purveyor with sources that are approved to remain unfiltered shall comply with the source water quality and site-specific conditions under WAC 246-290-690 or 246-290-691 as demonstrated through monitoring conducted in accordance with WAC 246-290-694.

(7) The purveyor shall install filtration when the system fails to meet one or more of the source water quality and site-specific conditions under WAC 246-290-690 and 246-290-691, or the department determines that installation of filtration is necessary to protect the health of consumers served by the water system.

(8) The purveyor, in response to a written notification by the department, shall install filtration within eighteen months.

(9) The purveyor may comply with the requirements to install filtration by:

(a) Constructing a water treatment facility that is designed, operated, and maintained in accordance with Subparts A, B, and C of Part 6 of this chapter;

(b) Satisfying the source water quality and site-specific criteria specified in WAC 246-290-691 and constructing treatment facilities that are designed, operated, and main-

tained to provide a limited alternative to filtration in accordance with WAC 246-290-692; or

(c) Abandoning the surface water or GWI source, and:

(i) Developing an alternate, department-approved ground water source; or

(ii) Purchasing completely treated water from a department-approved public water system.

[Statutory Authority: RCW 43.02.050 [43.20.050]. 99-07-021, § 246-290-686, filed 3/9/99, effective 4/9/99. Statutory Authority: RCW 43.20.050. 94-14-001, § 246-290-686, filed 6/22/94, effective 7/23/94; 93-08-011 (Order 352B), § 246-290-686, filed 3/25/93, effective 4/25/93.]

WAC 246-290-690 Criteria to remain unfiltered. (1) For a system not using the "limited alternative to filtration" option to remain unfiltered, the purveyor using a surface water or GWI source shall meet the source water quality and site-specific conditions under this section, as demonstrated through monitoring conducted in accordance with WAC 246-290-694.

(2) Source water quality conditions necessary to remain unfiltered.

(a) Coliform limits.

(i) The purveyor shall ensure that representative source water samples taken before the first point of disinfection have a fecal coliform density less than or equal to 20/100 ml in ninety percent or more of all samples taken during the six previous calendar months the system served water to the public. Samples collected on days when source water turbidity exceeds 1.0 NTU shall be included when determining compliance with this requirement.

(ii) The purveyor shall submit a written report to the department if no source fecal coliform data has been submitted for days when source turbidity exceeded 1.0 NTU. The report shall document why sample results are not available and shall be submitted with the routine monitoring reports for the month in which the sample results are not available.

(b) Turbidity limits.

(i) The purveyor shall ensure that the turbidity level in representative source water samples taken before primary disinfection does not exceed 5.0 NTU.

(ii) A system failing to meet the turbidity requirements in (b)(i) of this subsection may remain unfiltered, if:

(A) The purveyor demonstrates to the department's satisfaction that the most recent turbidity event was caused by unusual and unpredictable circumstances; and

(B) Including the most recent turbidity event, there have not been more than:

(I) Two turbidity events in the twelve previous calendar months the system served water to the public; or

(II) Five turbidity events in the one-hundred-twenty previous calendar months the system served water to the public.

(iii) The purveyor of a system experiencing a turbidity event shall submit a written report to the department documenting why the turbidity event(s) occurred. The purveyor shall submit the report with the routine monitoring reports for the month in which the turbidity event(s) occurred.

(iv) The purveyor of a system with alternate, department-approved sources or sufficient treated water storage may avoid a turbidity event by implementing operational adjustments to prevent water with a turbidity exceeding 5.0 NTU from being delivered to consumers.

(v) When an alternate source or treated water storage is used during periods when the turbidity of the surface or GWI source exceeds 5.0 NTU, the purveyor shall not put the surface or GWI source back on-line, until the source water turbidity is 5.0 NTU or less.

(3) Site-specific conditions to remain unfiltered.

(a) Level of inactivation.

(i) The purveyor shall ensure that the *Giardia lamblia* cyst and virus inactivation levels required under WAC 246-290-692(1) are met in at least eleven of the twelve previous calendar months that the system served water to the public.

(ii) A system failing to meet the inactivation requirements during two of the twelve previous calendar months that the system served water to the public may remain unfiltered, if the purveyor demonstrates to the department's satisfaction that at least one of the failures was caused by unusual and unpredictable circumstances.

(iii) To make a demonstration, the purveyor shall submit to the department a written report documenting the reasons for the failure. The purveyor shall submit the report with the routine monitoring reports for the month in which the failure occurred.

(b) Redundant disinfection components or automatic shutoff.

The purveyor shall ensure that the requirement for redundant disinfection system components or automatic shutoff of water to the distribution system under WAC 246-290-692(3) is met at all times the system serves water to the public.

(c) Disinfectant residual entering the distribution system.

(i) The purveyor shall ensure that the requirement for having a residual entering the distribution system under WAC 246-290-692(4) is met at all times the system serves water to the public.

(ii) A system failing to meet the disinfection requirement under (c)(i) of this subsection may remain unfiltered, if the purveyor demonstrates to the department's satisfaction that the failure was caused by unusual and unpredictable circumstances.

(iii) To make a demonstration, the purveyor shall submit to the department a written report documenting the reasons for the failure. The purveyor shall submit the report with the routine monitoring reports for the month in which the failure occurred.

(d) Disinfectant residuals within the distribution system.

(i) The purveyor shall ensure that the requirement for maintaining a residual within the distribution system under WAC 246-290-692(5) is met on an ongoing basis.

(ii) A system failing to meet the disinfection requirements under (d)(i) of this subsection may remain unfiltered, if the purveyor demonstrates to the department's satisfaction that the failure was caused by something other than a deficiency in source water treatment.

(iii) To make a demonstration, the purveyor shall submit to the department a written report documenting the reasons for the failure. The purveyor shall submit the report with the routine monitoring reports for the month in which the failure occurred.

(e) Watershed control.

(i) The purveyor shall develop and implement a department-approved watershed control program.

(ii) The purveyor shall monitor, limit, and control all facilities and activities in the watershed affecting source quality to preclude degradation of the physical, chemical, microbiological (including viral contamination and contamination by *Cryptosporidium* oocysts), and radiological quality of the source. The purveyor shall demonstrate, through ownership and/or written agreements acceptable to the department, control of all human activities that may adversely impact source quality.

(iii) At a minimum, the purveyor's watershed control program shall:

(A) Characterize the watershed hydrology and land ownership;

(B) Identify watershed characteristics and activities that may adversely affect source water quality; and

(C) Monitor the occurrence of activities that may adversely affect source water quality.

(iv) If the department determines significant changes have occurred in the watershed, the purveyor shall submit, within ninety days of notification, an updated watershed control program to the department for review and approval.

(v) The department may require an unfiltered system to conduct additional monitoring to demonstrate the adequacy of the watershed control program.

(vi) A purveyor shall be considered out of compliance when failing to:

(A) Have a department-approved watershed control program;

(B) Implement the watershed control program to the satisfaction of the department; or

(C) Conduct additional monitoring as directed by the department.

(f) On-site inspections.

(i) The department shall conduct on-site inspections to assess watershed control and disinfection treatment.

(ii) The department shall conduct annual inspections unless more frequent inspections are deemed necessary to protect the health of consumers served by the system.

(iii) For a system to remain unfiltered, the on-site inspection shall indicate to the department's satisfaction that the watershed control program and disinfection treatment comply with (e) of this subsection and WAC 246-290-692, respectively.

(iv) The purveyor with unsatisfactory on-site inspection results shall take action as directed by the department in accordance with a department-established schedule.

(g) Waterborne disease outbreak.

(i) To remain unfiltered, a system shall not have been identified by the department as the cause of a waterborne disease outbreak attributable to a failure in treatment of the surface or GWI source.

(ii) The purveyor of a system identified by the department as the cause of a waterborne disease outbreak may remain unfiltered, if the purveyor demonstrates to the department's satisfaction that system facilities and/or operations have been sufficiently modified to prevent another waterborne disease outbreak.

(h) Total coliform MCL.

(i) For a system to remain unfiltered, the purveyor shall ensure that the MCL for total coliform under WAC 246-290-310 is met in at least eleven of the twelve previous calendar months the system served water to the public.

(ii) A system failing to meet the criteria in (i) of this subsection, may remain unfiltered, if the purveyor demonstrates to the department's satisfaction that the total coliform MCL violations were not caused by a deficiency in source water treatment.

(iii) The department shall determine the adequacy of source water treatment based on results of total coliform monitoring at the entry to the distribution system in accordance with WAC 246-290-694(3).

(i) Disinfectant residuals MRDL and disinfection byproducts MCLs - Monitoring and compliance.

For a system to remain unfiltered, the purveyor shall comply with the monitoring and MCL requirements under WAC 246-290-300(6) and 246-290-310 (5) and (6), respectively.

(j) Laboratory services.

(i) For a system to remain unfiltered, the purveyor shall retain the services of the public health laboratory or another laboratory certified by the department to analyze samples for total and fecal coliform. Laboratory services shall be available on an as needed basis, seven days a week, including holidays. The purveyor shall identify in the annual comprehensive report required under WAC 246-290-696 the certified laboratory providing these services.

(ii) The department may waive this requirement, if the purveyor demonstrates to the department's satisfaction that an alternate, department-approved source is used when the turbidity of the surface or GWI source exceeds 1.0 NTU.

[Statutory Authority: RCW 70.119A.180 and 43.20.050. 08-03-061, § 246-290-690, filed 1/14/08, effective 2/14/08. Statutory Authority: RCW 43.20.-050 (2) and (3) and 70.119A.080. 03-08-037, § 246-290-690, filed 3/27/03, effective 4/27/03. Statutory Authority: RCW 43.02.050 [43.20.050]. 99-07-021, § 246-290-690, filed 3/9/99, effective 4/9/99. Statutory Authority: RCW 43.20.050. 93-08-011 (Order 352B), § 246-290-690, filed 3/25/93, effective 4/25/93.]

WAC 246-290-691 Criteria for unfiltered systems with a "limited alternative to filtration" to remain unfiltered. (1) For a system providing a limited alternative to filtration, the purveyor using a surface water or GWI source shall meet the source quality and site-specific conditions under this section.

(2) Source water turbidity requirements.

(a) The purveyor shall ensure that the turbidity level in representative source water samples taken before primary disinfection does not exceed 5.0 NTU.

(b) A system with more than two turbidity events in the twelve previous calendar months the water was served to the public or more than five turbidity events in the one hundred twenty previous calendar months the water was served to the public shall expand the scope of its next annual comprehensive report required under WAC 246-290-696(6) to include:

(i) A description of the events;

(ii) A summary of previous turbidity events;

(iii) A proposed plan of corrective action; and

(iv) A schedule for implementing the action plan.

(3) Site-specific requirements.

(a) Level of inactivation.

(i) The purveyor shall ensure that the removal and/or inactivation levels required under WAC 246-290-630(11) are

met in at least eleven of the twelve previous calendar months that the system served water to the public.

(ii) A system failing to meet the inactivation requirements in (a)(i) of this subsection in two or more months of the previous twelve calendar months the system served water to the public shall expand the scope of its annual comprehensive report required under WAC 246-290-696(6) to include:

(A) A description of the failure(s);

(B) A summary of previous inactivation failures;

(C) A proposed plan of corrective action; and

(D) A schedule for implementing the action plan.

(b) Watershed control.

(i) The watershed must not be allowed to be inhabited, except for those designated individuals and for those periods of time each year that would be directly associated with the protection of the watershed.

(ii) The purveyor shall develop and implement a department-approved watershed control program.

(iii) The purveyor shall monitor, limit, and control all facilities and activities in the watershed affecting source quality to preclude degradation of the physical, chemical, microbiological (including viral and *Cryptosporidium* oocysts contamination), and radiological quality of the source. The purveyor shall demonstrate, through ownership and/or written agreements acceptable to the department, control of all human activities that may adversely impact source quality.

(iv) At a minimum, the purveyor's watershed control program shall:

(A) Characterize the watershed hydrology and land ownership;

(B) Identify watershed characteristics and activities that may adversely affect source water quality; and

(C) Monitor the occurrence of activities that may adversely affect source water quality.

(v) If the department determines significant changes have occurred in the watershed, the purveyor shall submit, within ninety days of notification, an updated watershed control program to the department for review and approval.

(vi) The purveyor may be required to conduct additional monitoring to demonstrate the adequacy of the watershed control program.

(vii) A purveyor shall be considered out of compliance when failing to:

(A) Have a department-approved watershed control program;

(B) Implement the watershed control program to the satisfaction of the department;

(C) Conduct additional monitoring as directed by the department; or

(D) Prevent the human inhabitation of the watershed, except during the periods of time when conducting watershed protection activities as provided in (b)(i) of this subsection.

(c) On-site inspections.

(i) The purveyor shall submit to on-site inspections by the department to assess watershed control and disinfection treatment.

(ii) The purveyor shall submit to annual inspections by the department unless more frequent inspections are deemed necessary to protect the health of consumers served by the system.

(iii) The purveyor with unsatisfactory on-site inspection results shall take action as directed by the department in accordance with a department-established schedule.

(d) Waterborne disease outbreak.

(i) The system shall not be identified by the department as the cause of a waterborne disease outbreak attributable to a failure in treatment of the surface or GWI source.

(ii) A system identified by the department as the cause of a waterborne disease in (d)(i) of this subsection shall expand the scope of its annual comprehensive report required under WAC 246-290-696(6) to include:

(A) A description of the outbreak;

(B) A summary of previous waterborne disease outbreaks attributed to the system;

(C) A proposed plan of corrective action; and

(D) A schedule for implementing the action plan.

[Statutory Authority: RCW 43.20.050 (2) and (3) and 70.119A.080. 03-08-037, § 246-290-691, filed 3/27/03, effective 4/27/03. Statutory Authority: RCW 43.02.050 [43.20.050]. 99-07-021, § 246-290-691, filed 3/9/99, effective 4/9/99.]

WAC 246-290-692 Disinfection for unfiltered systems. (1) General requirements.

(a) The purveyor without a limited alternative to filtration shall:

(i) Provide continuous disinfection treatment to ensure at least 99.9 percent (3 log) inactivation of *Giardia lamblia* cysts and 99.99 percent (4 log) inactivation of viruses at all times the system serves water to the public.

(ii) Failure to provide the required inactivation level on more than one day in any calendar month shall be considered a treatment technique violation.

(b) The purveyor with a limited alternative to filtration shall meet the treatment requirements in WAC 246-290-630 (11) at all times the system serves water to the public.

(c) The purveyor may be required to provide greater levels of inactivation of *Giardia lamblia* cysts, other pathogenic microorganisms of public health concern, and viruses to protect the health of consumers.

(2) Determining the level of inactivation.

(a) Each day the system without a limited alternative to filtration serves water to the public, the purveyor, using procedures and $CT_{99.9}$ values specified in 40 CFR 141.74, Vol. 54, No. 124, (published June 29, 1989), shall determine:

(i) CT values using the system's treatment parameters and calculate the total inactivation ratio achieved by disinfection; and

(ii) Whether the system's disinfection treatment process is achieving the minimum levels of inactivation of *Giardia lamblia* cysts and viruses required by the department. For purposes of determining compliance with the inactivation requirements specified in subsection (1) of this section, no credit shall be granted for disinfection applied to a source water with a turbidity greater than 5.0 NTU.

(b) Each day the system with a limited alternative to filtration serves water to the public, the purveyor, using appropriate guidance, shall determine:

(i) CT values using the system's treatment parameters and calculate the total inactivation ratio achieved by disinfection; and

(ii) Whether the system's treatment process is achieving the minimum levels of inactivation of *Giardia lamblia* cysts, viruses, or other pathogenic organisms of health concern including *Cryptosporidium* oocysts that would be greater than what would be expected from the combination of filtration plus chlorine disinfection.

(c) The purveyor shall be considered in compliance with the daily inactivation requirement when a total inactivation ratio equal to or greater than 1.0 is achieved.

(d) The purveyor of a system using a disinfectant or combination of disinfectants may use CT values lower than those specified in (a) of this subsection, if the purveyor demonstrates to the department's satisfaction that the required levels of inactivation of *Giardia lamblia* cysts, viruses, and, if providing a limited alternative to filtration, any other pathogenic organisms of public health concern including *Cryptosporidium* oocysts, can be achieved using the lower CT values.

(e) The purveyor of a system using preformed chloramines or adding ammonia to the water before chlorine shall demonstrate to the department's satisfaction that the system achieves at least 99.99 percent (4 log) inactivation of viruses.

(3) The purveyor using either unfiltered or "limited alternative to filtration" treated sources shall ensure that disinfection facilities provide either:

(a) Redundant components, including an auxiliary power supply with automatic start up and alarm, to ensure continuous disinfection. Redundancy shall ensure that both the minimum inactivation requirements and the requirement for a 0.2 mg/L residual disinfectant concentration at entry to the distribution system are met at all times water is delivered to the distribution system; or

(b) Automatic shutoff of delivery of water to the distribution system when the residual disinfectant concentration in the water is less than 0.2 mg/L. Automatic shutoff shall be allowed only in systems where the purveyor demonstrates to the department's satisfaction that automatic shutoff will not endanger health or interfere with fire protection.

(4) Disinfectant residual entering the distribution system.

(a) The purveyor shall ensure that water entering the distribution system contains a residual disinfectant concentration, measured as free or combined chlorine, of at least 0.2 mg/L at all times the system serves water to the public; and

(b) Failure to provide a 0.2 mg/L residual at entry to distribution for more than four hours on any day shall be considered a treatment technique violation.

(5) Disinfectant residuals within the distribution system.

(a) The purveyor shall ensure that the residual disinfectant concentration in the distribution system, measured as total chlorine, free chlorine, combined chlorine, or chlorine dioxide, is detectable in at least ninety-five percent of the samples taken each calendar month.

(b) The purveyor of a system that purchases completely treated surface or GWI water as determined by the department shall comply with the requirements specified in (a) of this subsection.

(c) Water in the distribution system with an HPC level less than or equal to 500 organisms/ml is considered to have a detectable residual disinfectant concentration.

[Statutory Authority: RCW 70.119A.180 and 43.20.050. 08-03-061, § 246-290-692, filed 1/14/08, effective 2/14/08. Statutory Authority: RCW 43.20.-050 (2) and (3) and 70.119A.080. 03-08-037, § 246-290-692, filed 3/27/03, effective 4/27/03. Statutory Authority: RCW 43.02.050 [43.20.050]. 99-07-021, § 246-290-692, filed 3/9/99, effective 4/9/99. Statutory Authority: RCW 43.20.050. 94-14-001, § 246-290-692, filed 6/22/94, effective 7/23/94; 93-08-011 (Order 352B), § 246-290-692, filed 3/25/93, effective 4/25/93.]

WAC 246-290-694 Monitoring for unfiltered systems. (1) Source coliform monitoring for systems without a limited alternative to filtration.

(a) The purveyor shall ensure that source water samples of each surface or GWI source are representative and:

(i) Collected before the first point of disinfectant application; and

(ii) Analyzed for fecal coliform density in accordance with methods acceptable to the department.

(b) The purveyor shall ensure source samples are collected for fecal coliform analysis each week the system serves water to the public based on the following schedule:

Population Served	Minimum Number/week*
25 - 500	1
501 - 3,300	2
3,301 - 10,000	3
10,001 - 25,000	4
>25,000	5

*Must be taken on separate days.

(c) Each day the system serves water to the public and the turbidity of the source water exceeds 1.0 NTU, the purveyor shall ensure one representative source water sample is collected before the first point of disinfectant application and analyzed for fecal coliform density. This sample shall count toward the weekly source coliform sampling requirement.

(d) The purveyor using a surface water or GWI source and that meets the criteria to remain unfiltered under WAC 246-290-690, shall collect at least one sample near the first service connection each day the turbidity level of the source water, measured as specified under WAC 246-290-694, exceeds 1 NTU. This sample must be analyzed for the presence of total coliform. When one or more turbidity measurements in any day exceed 1 NTU, the system must collect this coliform sample within twenty-four hours of the first exceedance, unless the department determines that the system, for logistical reasons outside the system's control, cannot have the sample analyzed within thirty hours of collection. Sample results from this coliform monitoring must be included in determining compliance with the MCL for total coliforms under WAC 246-290-310(2).

(e) A purveyor shall not be considered in violation of (c) of this subsection, if the purveyor demonstrates to the department's satisfaction that, for valid logistical reasons outside the purveyor's control, the additional fecal coliform sample could not be analyzed within a time frame acceptable to the department.

(2) Source coliform monitoring for systems with a limited alternative to filtration.

(a) The purveyor shall ensure that source water samples of each surface or GWI source are:

(i) Collected before the first point of primary disinfection; and

(ii) Analyzed for fecal coliform density in accordance with methods acceptable to the department.

(b) At a minimum, the purveyor shall ensure source samples are collected for fecal coliform analysis at a frequency equal to ten percent the number of routine coliform samples collected within the distribution system each month under WAC 246-290-300, or once per calendar month, whichever is greater, up to a maximum of one sample per day.

(3) Coliform monitoring at entry to distribution for systems without a limited alternative to filtration.

(a) The purveyor shall collect and have analyzed one coliform sample at the entry point to the distribution system each day that a routine or repeat coliform sample is collected within the distribution system under WAC 246-290-300(3) or 246-290-320(2), respectively.

(b) The purveyor shall use the results of the coliform monitoring at entry to distribution along with inactivation ratio monitoring results to demonstrate the adequacy of source treatment.

(4) Source turbidity monitoring for systems without a limited alternative to filtration.

(a) The purveyor shall continuously monitor and record turbidity:

(i) On representative source water samples before the first point of primary disinfectant application; and

(ii) In accordance with the analytical techniques in WAC 246-290-638.

(b) If source water turbidity is not the same as the turbidity of water delivered to consumers, the purveyor shall continuously monitor and record turbidity of water delivered.

(5) Source turbidity monitoring for systems with a limited alternative to filtration. The purveyor shall:

(a) Continuously monitor turbidity on representative source samples before the first point of primary disinfection application;

(b) Record continuous turbidity measurements at equal intervals, of at least four hours, in accordance with a department-approved sampling schedule; and

(c) Conduct monitoring in accordance with the analytical techniques under WAC 246-290-638.

(6) Monitoring the level of inactivation.

(a) Each day the system is in operation, the purveyor shall determine the total level of inactivation of *Giardia lamblia* cysts, viruses, and, if providing a limited alternative to filtration, any other pathogenic organisms of health concern including *Cryptosporidium* oocysts, achieved through disinfection.

(b) At least once per day, the purveyor shall monitor the following parameters to determine the total inactivation ratio achieved through disinfection:

(i) Temperature of the disinfected water at each residual disinfectant concentration sampling point used for CT calculations; and

(ii) If using chlorine, pH of the disinfected water at each chlorine residual disinfectant concentration sampling point used for CT calculations.

(c) Each day during peak hourly flow, the purveyor shall:

(i) Determine disinfectant contact time, T, to the point at which C is measured; and

(ii) Measure the residual disinfectant concentration, C, of the water at the point for which T is calculated. The C measurement point must be before or at the first consumer.

(7) Monitoring the residual disinfectant concentration entering the distribution system for either unfiltered systems, or systems using a limited alternative to filtration.

(a) Systems serving more than thirty-three hundred people.

(i) The purveyor shall continuously monitor and record the residual disinfectant concentration of water entering the distribution system and report the lowest value each day.

(ii) If the continuous monitoring equipment fails, the purveyor shall measure the residual disinfectant concentration on grab samples collected at least every four hours at the entry to the distribution system while the equipment is being repaired or replaced. The purveyor shall have continuous monitoring equipment back on-line within five working days following failure.

(b) Systems serving thirty-three hundred or less people.

(i) The purveyor shall collect grab samples or use continuous monitoring and recording to measure the residual disinfectant concentration entering the distribution system.

(ii) A purveyor choosing to take grab samples shall collect:

(A) Samples at the following minimum frequencies:

Population Served	Number/day
25 - 500	1
501 - 1,000	2
1,001 - 2,500	3
2,501 - 3,300	4

(B) At least one of the grab samples at peak hourly flow based on historical flows for the system; and

(C) The remaining sample or samples at intervals evenly spaced over the time the system is disinfecting water that will be delivered to the public.

(iii) When grab samples are collected and the residual disinfectant concentration at the entry to distribution falls below 0.2 mg/L, the purveyor shall collect a grab sample every four hours until the residual disinfectant concentration is 0.2 mg/L or more.

(8) Monitoring residual disinfectant concentration within the distribution system for either unfiltered systems, or systems using a limited alternative to filtration.

(a) The purveyor shall measure the residual disinfectant concentration within the distribution system at the same time and location that a routine or repeat coliform sample is collected under WAC 246-290-300(3) or 246-290-320(2) or once per day, whichever is greater.

(b) The purveyor of a system that purchases completely treated surface or GWI water as determined by the department shall comply with the requirements of (a) of this subsection or as otherwise directed by the department under WAC 246-290-300 (2)(c). At a minimum, the purveyor shall measure the residual disinfectant concentration within the distribution system at the same time and location that a routine or repeat coliform sample is collected under WAC 246-290-300(3) or 246-290-320(2).

(c) The purveyor may measure HPC within the distribution system in lieu of measuring the residual disinfectant concentration under this subsection.

[Statutory Authority: RCW 70.119A.180 and 43.20.050. 08-03-061, § 246-290-694, filed 1/14/08, effective 2/14/08. Statutory Authority: RCW 43.20.-050 (2) and (3) and 70.119A.080. 03-08-037, § 246-290-694, filed 3/27/03, effective 4/27/03. Statutory Authority: RCW 43.02.050 [43.20.050]. 99-07-021, § 246-290-694, filed 3/9/99, effective 4/9/99. Statutory Authority: RCW 43.20.050. 94-14-001, § 246-290-694, filed 6/22/94, effective 7/23/94; 93-08-011 (Order 352B), § 246-290-694, filed 3/25/93, effective 4/25/93.]

WAC 246-290-696 Reporting for unfiltered systems. (1) The purveyor shall report to the department as soon as possible, but no later than twenty-four hours after the purveyor learns of any of the following events:

(a) A waterborne disease outbreak potentially attributable to the water system occurs;

(b) The turbidity of water delivered to the public exceeds 5.0 NTU;

(c) The minimum level of inactivation required by the department is not met;

(d) The residual disinfectant concentration falls below 0.2 mg/L at the entry point to the distribution system. The purveyor shall also report whether the residual was restored to 0.2 mg/L or more within four hours; or

(e) The surface or GWI source is taken off-line due to an emergency.

(2) The purveyor shall report results of monitoring conducted in accordance with WAC 246-290-694 to the department. Monthly report forms shall be submitted within ten days after the end of each month the system served water to the public.

(3) The purveyor shall report, at a minimum, all the information requested by the department using a department-approved form or format including:

(a) Water quality information, including the results of both:

(i) Source coliform monitoring; and

(ii) Source turbidity monitoring.

(b) Disinfection monitoring information, including:

(i) Level of inactivation achieved;

(ii) Residual disinfectant concentrations entering the distribution system; and

(iii) Residual disinfectant concentrations within the distribution system.

(c) A summary of water quality complaints received from consumers served by the water system.

(4) The purveyor of a system that purchases completely treated water shall:

(a) Report results of distribution system residual disinfectant concentration monitoring to the department using department-approved forms or format; and

(b) Submit forms to the department in accordance with subsection (2) of this section or as otherwise directed by the department.

(5) A person certified under chapter 246-292 WAC shall complete and sign the monthly report forms required in this section.

(6) Beginning in 1992, by October 10th of each year, the purveyor shall submit to the department an annual comprehensive report that summarizes the:

(a) Effectiveness of the watershed control program and identifies, at a minimum, the following:

(i) Activities in the watershed that are adversely affecting source water quality;

(ii) Changes in the watershed that have occurred within the previous year that could adversely affect source water quality;

(iii) Activities expected to occur in the watershed in the future and how the activities will be monitored and controlled;

(iv) The monitoring program the purveyor uses to assess the adequacy of watershed protection including an evaluation of sampling results; and

(v) Special concerns about the watershed and how the concerns are being addressed;

(b) System's compliance with the criteria to remain unfiltered under WAC 246-290-690, or, when applicable, the criteria required if the system provides a limited alternative to filtration under WAC 246-290-691; and

(c) Significant changes in system design and/or operation that have occurred within the previous year that impact the ability of the system to comply with the criteria to remain unfiltered, or, if applicable, the ability of the system to provide a limited alternative to filtration in accordance with WAC 246-290-692.

(7) The purveyor of a system attempting to remain unfiltered or to remain with a limited alternative to filtration shall submit a *Filtration Decision Report* at the request of the department. The report shall:

(a) Provide the information by which the department may determine whether a system continues to meet the criteria to remain unfiltered or, if applicable, the criteria allowing the provision of a limited alternative to filtration; and

(b) Be submitted on a schedule as specified by the department.

[Statutory Authority: RCW 43.20.050 (2) and (3) and 70.119A.080. 03-08-037, § 246-290-696, filed 3/27/03, effective 4/27/03. Statutory Authority: RCW 43.02.050 [43.20.050]. 99-07-021, § 246-290-696, filed 3/9/99, effective 4/9/99. Statutory Authority: RCW 43.20.050. 94-14-001, § 246-290-696, filed 6/22/94, effective 7/23/94; 93-08-011 (Order 352B), § 246-290-696, filed 3/25/93, effective 4/25/93.]

PART 7.
REPORTING

Subpart A - Public Notification and Consumer Information

WAC 246-290-71001 Public notification. (1) The purveyor shall notify the water system users and the owner or operator of any consecutive water system served in accordance with 40 CFR 141.201 through 208. Notice is to be provided when the system violates a National Primary Drinking Water Regulation and when any of the situations listed in Table 1 of 40 CFR 141.201 occur, except for (3)(ii). Public notifications for violations and other situations are categorized into the following Tiers:

(a) Tier 1 as described in Table 1 of 40 CFR 141.202(a);

(b) Tier 2 as described in Table 1 of 40 CFR 141.203(a); or

(c) Tier 3 as described in Table 1 of 40 CFR 141.204(a).

(2) The purveyor shall initiate consultation with the department as soon as possible, but no later than twenty-four hours after they learn their system has a Tier 1 violation or situation in order to determine if additional public notice is required. The purveyor shall comply with any additional public notification requirements established as a result of the consultation.

(3) The purveyor shall notify the water system users when the system:

(a) Is issued a department order;

(b) Fails to comply with a department order; or

(c) Is issued a category red operating permit.

[Statutory Authority: RCW 70.119A.180 and 43.20.050. 08-03-061, § 246-290-71001, filed 1/14/08, effective 2/14/08. Statutory Authority: RCW 43.20.050 (2) and (3) and 70.119A.080. 03-08-037, § 246-290-71001, filed 3/27/03, effective 4/27/03.]

WAC 246-290-71002 Public notice content. (1) Public notices required under WAC 246-290-71001(1) shall contain the elements and standard language required under 40 CFR 141.205 (a), (b), and (d) and be presented in accordance with 40 CFR 141.205 (c), except that notification of the availability of unregulated contaminant results and notification of an exceedance of the secondary MCL for fluoride shall be in accordance with WAC 246-290-71005.

(2) Public notices required under WAC 246-290-71001 (3)(a) and (c) for the issuance of a departmental order or category red operating permit shall include:

(a) A clear, concise, and simple explanation of the violation;

(b) Discussion of potential adverse health effects and any segments of the population that may be at higher risk;

(c) Mandatory health effects information in accordance with WAC 246-290-71004(2);

(d) A list of steps the purveyor has taken or is planning to take to remedy the situation;

(e) A list of steps the consumer should take, including advice on seeking an alternative water supply if necessary;

(f) The purveyor's name and telephone number; and

(g) When appropriate, notices shall be bilingual or multilingual.

Note: The purveyor may provide additional information to further explain the situation.

[Statutory Authority: RCW 43.20.050 (2) and (3) and 70.119A.080. 03-08-037, § 246-290-71002, filed 3/27/03, effective 4/27/03.]

WAC 246-290-71003 Public notification distribution. (1) Purveyors must provide public notice as required under WAC 246-290-71001(1) according to Tier designation generally described in 40 CFR 141.201. The form, manner, timing and frequency for each Tier of public notice, as defined in Table 2 of 40 CFR 141.201 shall be in accordance with:

(a) 40 CFR 141.202 for Tier 1 public notice.

(b) 40 CFR 141.203 for Tier 2 public notice.

(c) 40 CFR 141.204 for Tier 3 public notice.

(2) In addition, notice to new billing units and consumers must be given in accordance with 40 CFR 141.206.

(3) Purveyors of community, NTNC and TNC systems shall provide notice as described in this subsection, or as described in a departmental order within three months of receipt of a departmental order, or a category red operating permit. The purveyor shall provide the department with a copy of the notice at the time the purveyor notifies the public.

(a) Purveyors of community and NTNC systems shall provide newspaper notice to water system users.

(i) "Newspaper notice," as used above, means publication in a daily newspaper of general circulation or in a weekly newspaper of general circulation if a daily newspaper does not serve the area. The purveyor may substitute a community or homeowner's association newsletter or similar periodical publication if the newspaper reaches all affected consumers within the specified time.

(ii) The purveyor shall substitute a posted notice in the absence of a newspaper of general circulation or homeowner's association newsletter or similar periodical publication. The purveyor shall post the notice within the time frame specified in this subsection.

(b) Purveyors of TNC systems shall post a notice or notify consumers by other methods authorized by the department for receipt of a red operating permit.

(c) The purveyor shall place posted notices in conspicuous locations and present the notices in a manner making them easy to read. Notices shall remain posted until the violation is corrected.

(d) The purveyor of a community or NTNC water system shall give a copy of the most recent public notice for all outstanding violations to all new billing units or new hookups before or at the time water service begins.

[Statutory Authority: RCW 43.20.050 (2) and (3) and 70.119A.080. 03-08-037, § 246-290-71003, filed 3/27/03, effective 4/27/03.]

WAC 246-290-71004 Public notification mandatory language. (1) Public notice required under WAC 246-290-71001(1) shall contain any specific health effects language set forth in WAC 246-290-72012 in accordance with 40 CFR 141.205 (d)(1) and other standard language in accordance with 40 CFR 141.205 (d)(2) and (3), except that notification of the availability of unregulated contaminant results and notification of the exceedance of the secondary MCL for fluoride shall be in accordance with WAC 246-290-71005.

(2) The purveyor shall provide specific mandatory language, contained in department guidance, in its notification when the purveyor is issued a category red operating permit.

[Statutory Authority: RCW 43.20.050 (2) and (3) and 70.119A.080. 03-08-037, § 246-290-71004, filed 3/27/03, effective 4/27/03.]

WAC 246-290-71005 Special public notification requirements. (1) The purveyor of community or NTNC water systems required to monitor under WAC 246-290-300(7) shall notify the water system users of the availability of the results of monitoring for unregulated contaminants no later than twelve months after the monitoring results are known. The form and manner of the public notice to the water system users shall be in accordance with 40 CFR 141.204 (c), (d)(1), and (d)(3). The notice must also identify a person and provide the telephone number to contact for information on the monitoring results.

(2) The purveyor of a community water system that experiences a secondary MCL violation for fluoride shall provide notice, in accordance with the form, manner, timing and content requirements of 40 CFR 141.208.

(3) The purveyor of a water system using surface water or GWI sources that repeatedly fails to monitor for *Cryptosporidium* or determine the bin classification or mean *Cryptosporidium* level, must notify the public under 40 CFR 141.211.

[Statutory Authority: RCW 70.119A.180 and 43.20.050. 08-03-061, § 246-290-71005, filed 1/14/08, effective 2/14/08. Statutory Authority: RCW 43.20.050 (2) and (3) and 70.119A.080. 03-08-037, § 246-290-71005, filed 3/27/03, effective 4/27/03.]

WAC 246-290-71006 Consumer information. The purveyor shall provide consumer information to the water system users within twenty-one days of receipt of confirmation sample results when the department determines that a substance not included in this chapter is confirmed at a level greater than a SAL.

(1) Consumer information shall include:

(a) Name and level of chemical detected;

(b) Location where the chemical was detected;

(c) Any health effects that the chemical could cause at its present concentration;

(d) Plans for follow-up activities; and

(e) The purveyor's name and telephone number.

(2) Consumer information shall be distributed by any of the following methods:

(a) Notice placed in a daily newspaper of general circulation or in a weekly newspaper of general circulation if a daily newspaper does not serve the affected area;

(b) Direct mail to consumers;

(c) Posting for at least one week if a NTNC system; or

(d) Any other method approved by the department.

[Statutory Authority: RCW 43.20.050 (2) and (3) and 70.119A.080. 03-08-037, § 246-290-71006, filed 3/27/03, effective 4/27/03.]

WAC 246-290-71007 Public notification special provisions. (1) When circumstances dictate, the purveyor shall give a broader or more immediate notice to protect public health. The department may require the purveyor's notification by whatever means necessary.

(2) When the state board of health grants a public water system a waiver, the purveyor shall notify consumers and new billing units or new customers before water service begins. The purveyor shall provide a notice annually and send a copy to the department.

(3) The department may give notice to the water system users and the owner or operator of any consecutive water system served as required by this section on behalf of the water purveyor. However, the purveyor remains responsible for ensuring Part 7, Subpart A requirements are met.

[Statutory Authority: RCW 43.20.050 (2) and (3) and 70.119A.080. 03-08-037, § 246-290-71007, filed 3/27/03, effective 4/27/03.]

Subpart B - Consumer Confidence Reports

WAC 246-290-72001 Purpose and applicability of the consumer confidence report requirements. WAC 246-290-72001 through 246-290-72012 establishes minimum requirements for the content of annual reports that community water systems must deliver to their customers. These reports must contain information on the quality of the water delivered by the systems and characterize the risks (if any) from exposure to contaminants detected in the drinking water in an accurate and understandable manner.

(1) This section applies only to community water systems.

(2) For the purpose of WAC 246-290-72001 through 246-290-72012:

(a) "Customers" means billing units or service connections to which water is delivered by a community water system.

(b) "Detected" means at or above the levels prescribed by WAC 246-290-300(4) for inorganic contaminants, at or above the levels prescribed by WAC 246-290-300(7) for organic contaminants, and at or above the levels prescribed by 40 CFR 141.25(c) for radioactive contaminants.

[Statutory Authority: RCW 70.119A.180 and 43.20.050. 08-03-061, § 246-290-72001, filed 1/14/08, effective 2/14/08. Statutory Authority: RCW 43.20.050 (2) and (3) and 70.119A.080. 03-08-037, § 246-290-72001, filed 3/27/03, effective 4/27/03. Statutory Authority: RCW 43.20.050. 00-15-080, § 246-290-72001, filed 7/19/00, effective 8/19/00.]

WAC 246-290-72002 Reporting dates. (1) Each existing community water system must deliver its report by July 1 annually. Each annual report must contain data collected during, or prior to, the previous calendar year as required by WAC 246-290-72005(3).

(2) A new community water system must deliver its first report by July 1 of the year after its first full calendar year in operation and annually thereafter.

(3) A community water system that sells water to another community water system must deliver the applicable information required in WAC 246-290-72003 through 246-290-72009 to the buyer system:

(a) No later than April 1 annually; or

(b) On a date mutually agreed upon by the seller and the purchaser, and specifically included in a contract between the parties.

[Statutory Authority: RCW 43.20.050. 00-15-080, § 246-290-72002, filed 7/19/00, effective 8/19/00.]

WAC 246-290-72003 Report contents—Source water. Information on the source of the water delivered:

(1) Each report must identify the source(s) of the water delivered by the community water system by providing information on:

(a) The type of the water, for example, surface water, ground water, spring water, or purchased water; and

(b) The commonly used name (if any) and location of the body (or bodies) of water.

(2) If a source water assessment has been completed, the report must notify consumers of the availability of this information and the means to obtain it. In addition, systems are encouraged to highlight in the report significant sources of contamination in the source water area if they have readily available information.

(3) Where a system has received a source water assessment from the department, the report must include a brief summary of the system's susceptibility to potential sources of contamination, using language provided by the department or written by the purveyor.

[Statutory Authority: RCW 43.20.050. 00-15-080, § 246-290-72003, filed 7/19/00, effective 8/19/00.]

WAC 246-290-72004 Report contents—Definitions. (1) Each report must include the following definitions:

(a) Maximum contaminant level goal or MCLG: The level of a contaminant in drinking water below which there is no known or expected risk to health. MCLGs allow for a margin of safety.

(b) Maximum contaminant level or MCL: The highest level of a contaminant that is allowed in drinking water. MCLs are set as close to the MCLGs as feasible using the best available treatment technology.

(2) A report for a community water system operating under a variance or an exemption issued under WAC 246-290-060 must include the following definition: Variances and exemptions: State or EPA permission not to meet an MCL or a treatment technique under certain conditions.

(3) A report that contains data on contaminants that the Environmental Protection Agency regulates using any of the following terms must include the applicable definitions:

(a) Treatment technique: A required process intended to reduce the level of a contaminant in drinking water.

(b) Action level: The concentration of a contaminant which, if exceeded, triggers treatment or other requirements which a water system must follow.

(c) Maximum residual disinfectant level goal or MRDLG: The level of a drinking water disinfectant below which there is no known or expected risk to health. MRDLGs do not reflect the benefits of the use of disinfectants to control microbial contaminants.

(d) Maximum residual disinfectant level or MRDL: The highest level of a disinfectant allowed in drinking water. There is convincing evidence that addition of a disinfectant is necessary for control of microbial contaminants.

[Statutory Authority: RCW 43.20.050. 00-15-080, § 246-290-72004, filed 7/19/00, effective 8/19/00.]

WAC 246-290-72005 Report contents—Information on detected contaminants. (1) This section specifies the requirements for information to be included in each report for contaminants subject to mandatory monitoring. It applies to:

(a) Contaminants subject to an MCL, action level, maximum residual disinfectant level or treatment technique (regulated contaminants);

(b) Contaminants for which monitoring is required under 40 CFR 140.40; and

(c) Disinfection by-products for which monitoring is required by WAC 246-290-300(6) and 40 CFR 141.142 or microbial contaminants for which monitoring is required by WAC 246-290-300(3) and 40 CFR 141.143, except as provided under WAC 246-290-72006(1), and which are detected in the finished water.

(2) The data relating to these contaminants must be displayed in one table or in several adjacent tables. Any additional monitoring results which a community water system chooses to include in its report must be displayed separately.

(3) The data must be derived from data collected to comply with EPA and state monitoring and analytical requirements during the previous calendar year except that:

(a) Where a system is allowed to monitor for regulated contaminants less than once a year, the table(s) must include the date and results of the most recent sampling and the report must include a brief statement indicating that the data presented in the report are from the most recent testing done in accordance with the regulations. No data older than five years need be included.

(b) Results of monitoring in compliance with 40 CFR 141.142 and 40 CFR 141.143 need only be included for five years from the date of last sample or until any of the detected contaminants becomes regulated and subject to routine monitoring requirements, whichever comes first.

(4) For detected regulated contaminants listed in WAC 246-290-72012, the table(s) must contain:

(a) The MCL for that contaminant expressed as a number equal to or greater than 1.0 (as provided in WAC 246-290-72012);

(b) The MCLG for that contaminant expressed in the same units as the MCL;

(c) If there is no MCL for a detected contaminant, the table must indicate that there is a treatment technique, or specify the action level, applicable to that contaminant, and the report must include the definitions for treatment technique and/or action level, as appropriate, specified in WAC 246-290-72004;

(d) For contaminants subject to an MCL, except turbidity and total coliforms, the highest contaminant level used to determine compliance with a National Primary Drinking Water Regulation and the range of detected levels, as follows:

(i) When compliance with the MCL is determined annually or less frequently: The highest detected level at any sampling point and the range of detected levels expressed in the same units as the MCL.

(ii) When compliance with the MCL is determined by calculating a running annual average of all samples taken at a sampling point: The highest average of any of the sampling points and the range of all sampling points expressed in the same units as the MCL.

(iii) When compliance with the MCL is determined on a system-wide basis by calculating a running annual average of all samples at all sampling points: The average and range of detection expressed in the same units as the MCL.

(iv) Note to WAC 246-290-72005 (4)(d): When rounding of results to determine compliance with the MCL is allowed by the regulations, rounding should be done prior to multiplying the results by the factor listed in WAC 246-290-72012;

(e) For turbidity.

(i) When it is reported under chapter 246-290 WAC Part 6, Subpart C: The highest average monthly value.

(ii) When it is reported under the requirements of chapter 246-290 WAC Part 6, Subpart D: The highest monthly value. The report should include an explanation of the reasons for measuring turbidity.

(iii) When it is reported under chapter 246-290 WAC Part 6, Subpart B: The highest single measurement and the lowest monthly percentage of samples meeting the turbidity limits specified in chapter 246-290 WAC Part 6, Subpart B for the filtration technology being used. The report should include an explanation of the reasons for measuring turbidity;

(f) For lead and copper: The 90th percentile value of the most recent round of sampling and the number of sampling sites exceeding the action level;

(g) For total coliform:

(i) The highest monthly number of positive samples for systems collecting fewer than 40 samples per month; or

(ii) The highest monthly percentage of positive samples for systems collecting at least 40 samples per month;

(h) For fecal coliform: The total number of positive samples; and

(i) The likely source(s) of detected contaminants to the best of the purveyor's knowledge. Specific information regarding contaminants may be available in sanitary surveys and source water assessments, and should be used when available to the purveyor. If the purveyor lacks specific information on the likely source, the report must include one or more of the typical sources for that contaminant listed in WAC 246-290-72012 which are most applicable to the system.

(5) If a community water system distributes water to its customers from multiple hydraulically independent distribution systems that are fed by different raw water sources, the table should contain a separate column for each service area and the report should identify each separate distribution system. Alternatively, systems could produce separate reports tailored to include data for each service area.

(6) The table(s) must clearly identify any data indicating violations of MCLs, MRDLs, or treatment techniques and the report must contain a clear and readily understandable explanation of the violation including: The length of the violation, the potential adverse health effects, and actions taken by the system to address the violation. To describe the potential health effects, the system must use the relevant language of WAC 246-290-72012.

(7) For detected unregulated contaminants for which monitoring is required, the table(s) must contain the average and range at which the contaminant was detected. The report may include a brief explanation of the reasons for monitoring for unregulated contaminants.

[Statutory Authority: RCW 70.119A.180 and 43.20.050. 08-03-061, § 246-290-72005, filed 1/14/08, effective 2/14/08. Statutory Authority: RCW 43.20.050 (2) and (3) and 70.119A.080. 03-08-037, § 246-290-72005, filed 3/27/03, effective 4/27/03. Statutory Authority: RCW 43.20.050. 00-15-080, § 246-290-72005, filed 7/19/00, effective 8/19/00.]

WAC 246-290-72006 Report contents—Information on Cryptosporidium, radon, and other contaminants. (1) If the system has performed any monitoring for Cryptosporidium, and the results indicate that Cryptosporidium may be present in the source water or the finished water, the report must include:

(a) A summary of the results of the monitoring; and

(b) An explanation of the significance of the results.

(2) If the system has performed any monitoring for radon which indicates that radon may be present in the finished water, the report must include:

(a) The results of the monitoring; and

(b) An explanation of the significance of the results.

(3) If the system has performed additional monitoring which indicates the presence of other contaminants in the finished water, the department strongly encourages systems to report any results which may indicate a health concern. To determine if results may indicate a health concern, the department recommends that systems find out if EPA has proposed a National Primary Drinking Water Regulation or issued a health advisory for that contaminant by calling the Safe Drinking Water Hotline (800-426-4791). EPA considers detects above a proposed MCL or health advisory level to indicate possible health concerns. For the contaminants, the department recommends that the report include:

(a) The results of the monitoring; and

(b) An explanation of the significance of the results noting the existence of a health advisory or a proposed regulation.

[Statutory Authority: RCW 70.119A.180 and 43.20.050. 08-03-061, § 246-290-72006, filed 1/14/08, effective 2/14/08. Statutory Authority: RCW 43.20.050. 00-15-080, § 246-290-72006, filed 7/19/00, effective 8/19/00.]

WAC 246-290-72007 Report contents—Compliance with National Primary Drinking Water Regulations. In addition to the requirements of WAC 246-290-72005(6), the report must note any violation that occurred during the year covered by the report of a requirement listed below, and include a clear and readily understandable explanation of the violation, any potential adverse health effects, and the steps the system has taken to correct the violation.

(1) Monitoring and reporting of compliance data;

(2) Filtration and disinfection prescribed by chapter 246-290 WAC, Part 6. For systems which have failed to install adequate filtration or disinfection equipment or processes, or have had a failure of the equipment or processes which constitutes a violation, the report must include the following language as part of the explanation of potential adverse health effects: Inadequately treated water may contain disease-causing organisms. These organisms include bacteria, viruses, and parasites which can cause symptoms such as nausea, cramps, diarrhea, and associated headaches.

(3) Lead and copper control requirements prescribed by WAC 246-290-025, specifically CFR 141.80 through 141.91: For systems which fail to take one or more actions prescribed by WAC 246-290-025, specifically CFR 141.80 through 141.84, the report must include the applicable language of WAC 246-290-72012 for lead, copper, or both.

(4) Treatment techniques for Acrylamide and Epichlorohydrin prescribed by WAC 246-290-480 (2)(k). For systems which violate the requirements of WAC 246-290-480 (2)(k), the report must include the relevant language from WAC 246-290-72012.

(5) Recordkeeping of compliance data.

(6) Special monitoring requirements prescribed under WAC 246-290–310(3); and

(7) Violation of the terms of a variance, an exemption, or an administrative or judicial order.

[Statutory Authority: RCW 70.119A.180 and 43.20.050. 08-03-061, § 246-290-72007, filed 1/14/08, effective 2/14/08. Statutory Authority: RCW 43.20.050 (2) and (3) and 70.119A.080. 03-08-037, § 246-290-72007, filed 3/27/03, effective 4/27/03. Statutory Authority: RCW 43.20.050. 00-15-080, § 246-290-72007, filed 7/19/00, effective 8/19/00.]

WAC 246-290-72008 Report contents—Variances and exemptions. If a system is operating under the terms of a variance or an exemption issued under WAC 246-290-060, the report must contain:

(1) An explanation of the reasons for the variance or exemption;

(2) The date on which the variance or exemption was issued;

(3) A brief status report on the steps the system is taking to install treatment, find alternative sources of water, or otherwise comply with the terms and schedules of the variance or exemption; and

(4) A notice of any opportunity for public input in the review, or renewal, of the variance or exemption.

[Statutory Authority: RCW 43.20.050. 00-15-080, § 246-290-72008, filed 7/19/00, effective 8/19/00.]

WAC 246-290-72009 Report contents—Additional information. (1) The report must contain a brief explanation regarding contaminants which may reasonably be expected to be found in drinking water including bottled water. This explanation may include the language of (a) through (c) of this subsection or systems may use their own comparable language. The report also must include the language of (d) of this subsection.

(a) The sources of drinking water (both tap water and bottled water) include rivers, lakes, streams, ponds, reservoirs, springs, and wells. As water travels over the surface of the land or through the ground, it dissolves naturally occurring minerals and, in some cases, radioactive material, and can pick up substances resulting from the presence of animals or from human activity.

(b) Contaminants that may be present in source water include:

(i) Microbial contaminants, such as viruses and bacteria, which may come from sewage treatment plants, septic systems, agricultural livestock operations, and wildlife.

(ii) Inorganic contaminants, such as salts and metals, which can be naturally occurring or result from urban storm water runoff, industrial or domestic wastewater discharges, oil and gas production, mining, or farming.

(iii) Pesticides and herbicides, which may come from a variety of sources such as agriculture, urban storm water runoff, and residential uses.

(iv) Organic chemical contaminants, including synthetic and volatile organic chemicals, which are by-products of industrial processes and petroleum production, and can also come from gas stations, urban storm water runoff, and septic systems.

(v) Radioactive contaminants, which can be naturally occurring or be the result of oil and gas production and mining activities.

(c) In order to ensure that tap water is safe to drink, the Environmental Protection Agency and/or the Washington state board of health prescribes regulations that limit the amount of certain contaminants in water provided by public water systems. Food and Drug Administration and/or the Washington state department of agriculture regulations establish limits for contaminants in bottled water that must provide the same protection for public health.

(d) Drinking water, including bottled water, may reasonably be expected to contain at least small amounts of some contaminants. The presence of contaminants does not necessarily indicate that water poses a health risk. More information about contaminants and potential health effects can be obtained by calling the Environmental Protection Agency's Safe Drinking Water Hotline (800-426-4791).

(2) The report must include the telephone number of the owner, operator, or designee of the community water system as a source of additional information concerning the report.

(3) In communities with a large proportion of non-English speaking residents, the report must contain information in the appropriate language(s) regarding the importance of the report or contain a telephone number or address where such residents may contact the system to obtain a translated copy of the report or assistance in the appropriate language.

(4) The report must include information about opportunities for public participation in decisions that may affect the quality of the water, such as the time and place of meetings.

(5) The systems may include such additional information as they deem necessary for public education consistent with, and not detracting from, the purpose of the report.

[Statutory Authority: RCW 43.20.050. 00-15-080, § 246-290-72009, filed 7/19/00, effective 8/19/00.]

WAC 246-290-72010 Report contents—Required additional health information. All reports must prominently display the following language: Some people may be more vulnerable to contaminants in drinking water than the general population. Immuno-compromised persons such as persons with cancer undergoing chemotherapy, persons who have undergone organ transplants, people with HIV/AIDS or other immune system disorders, some elderly, and infants can be particularly at risk from infections. These people should seek advice about drinking water from their health care providers. Environmental Protection Agency/Centers for Disease Control guidelines on appropriate means to lessen the risk of infection by *Cryptosporidium* and other microbial contaminants are available from the Safe Drinking Water Hotline (800-426-4791).

(1) Beginning in the report due by July 1, 2002, a system which detects arsenic levels above 0.005 mg/L and up to and including 0.010 mg/L:

(a) Must include in its report a short informational statement about arsenic, using language such as: While your drinking water meets EPA's standard for arsenic, it does contain low levels of arsenic. EPA's standard balances the current understanding of arsenic's possible health effects against the cost of removing arsenic from drinking water. EPA continues to research the health effects of low levels of arsenic, which is a mineral known to cause cancer in humans at high concentrations and is linked to other health effects such as skin damage and circulatory problems.

(b) May write its own educational statement, but only in consultation with the department.

(2) A system which detects nitrate at levels above 5 mg/l, but below the MCL:

(a) Must include a short informational statement about the impacts of nitrate on children using language such as: Nitrate in drinking water at levels above 10 ppm is a health risk for infants of less than six months of age. High nitrate levels in drinking water can cause blue-baby syndrome. Nitrate levels may rise quickly for short periods of time because of rainfall or agricultural activity. If you are caring for an infant, you should ask for advice from your health care provider.

(b) May write its own educational statement, but only in consultation with the department.

(3) Systems which detect lead above the action level in more than five percent, and up to and including ten percent, of homes sampled:

(a) Must include a short informational statement about the special impact of lead on children using language such as: Infants and young children are typically more vulnerable to lead in drinking water than the general population. It is possible that lead levels at your home may be higher than at other homes in the community as a result of materials used in your home's plumbing. If you are concerned about elevated lead levels in your home's water, you may wish to have your water tested and flush your tap for thirty seconds to two minutes before using tap water. Additional information is available from the Safe Drinking Water Hotline (800-426-4791).

(b) May write its own educational statement, but only in consultation with the department.

[Statutory Authority: RCW 70.119A.180 and 43.20.050. 08-03-061, § 246-290-72010, filed 1/14/08, effective 2/14/08. Statutory Authority: RCW 43.20.050 and 70.119A.080. 04-04-056, § 246-290-72010, filed 1/30/04, effective 3/1/04. Statutory Authority: RCW 43.20.050 (2) and (3) and 70.119A.080. 03-08-037, § 246-290-72010, filed 3/27/03, effective 4/27/03. Statutory Authority: RCW 43.20.050. 00-15-080, § 246-290-72010, filed 7/19/00, effective 8/19/00.]

WAC 246-290-72011 Report delivery and recordkeeping. Each community water system must mail or otherwise directly deliver one copy of the report to each customer.

(1) The system must make a good faith effort to reach consumers who do not get water bills. The department expects that an adequate good faith effort will be tailored to the consumers who are served by the system but are not bill-paying customers, such as renters or workers. A good faith effort to reach consumers would include a mix of methods appropriate to the particular system such as: Posting the reports on the internet; mailing to postal patrons in metropolitan areas; advertising the availability of the report in the news media; publication in a local newspaper; posting in public places such as cafeterias or lunch rooms of public buildings; delivery of multiple copies for distribution by single-biller customers such as apartment buildings or large private employers; delivery to community organizations.

(2) No later than the date the system is required to distribute the report to its customers, each community water system must submit a copy of the report to the department, followed within three months by a certification that the report has been distributed to customers, and that the information is correct and consistent with the compliance monitoring data previously submitted to the department.

(3) No later than the date the system is required to distribute the report to its customers, each community water system must deliver the report to any other agency or clearinghouse identified by the department.

(4) Each community water system must make its reports available to the public upon request.

(5) Each community water system serving one hundred thousand or more persons must post its current year's report to a publicly accessible site on the internet.

(6) Any system subject to WAC 246-290-72001 through 246-290-72012 must retain copies of its consumer confidence report for no less than three years.

[Statutory Authority: RCW 70.119A.180 and 43.20.050. 08-03-061, § 246-290-72011, filed 1/14/08, effective 2/14/08. Statutory Authority: RCW 43.20.050. 00-15-080, § 246-290-72011, filed 7/19/00, effective 8/19/00.]

WAC 246-290-72012 Regulated contaminants.

Contaminant (units)	traditional MCL in mg/L	to convert for CCR, multiply by	MCL in CCR units	MCLG	Major Sources in Drinking Water	Health Effects Language
Microbiological Contaminants						
Total Coliform Bacteria	MCL: (systems that collect ≥ 40 samples/ month) more than 5% of monthly samples are positive; (systems that collect < 40 samples/ month) 2 or more positive samples per monthly sampling period		MCL: (systems that collect ≥ 40 samples/ month) more than 5% of monthly samples are positive; (systems that collect < 40 samples/ month) 2 or more positive samples per monthly sampling period	0	Naturally present in the environment	Coliforms are bacteria that are naturally present in the environment and are used as an indicator that other, potentially-harmful, bacteria may be present. Coliforms were found in more samples than allowed and this was a warning of potential problems.
Fecal coliform and *E. coli*	0		0	0	Human and animal fecal waste	Fecal coliforms and *E. coli* are bacteria whose presence indicates that the water may be contaminated with human or animal wastes. Microbes in these wastes can cause short-term effects, such as diarrhea, cramps, nausea, headaches, or other symptoms. They may pose a special health risk for infants, young children, some of the elderly, and people with severely-compromised immune systems.

Contaminant (units)	traditional MCL in mg/L	to convert for CCR, multiply by	MCL in CCR units	MCLG	Major Sources in Drinking Water	Health Effects Language
Total organic carbon (ppm)	TT	-	TT	n/a	Naturally present in the environment	Total organic carbon (TOC) has no health effects. However, total organic carbon provides a medium for the formation of disinfection by-products. These by-products include trihalomethanes (THMs) and haloacetic acids (HAAs). Drinking water containing these by-products in excess of the MCL may lead to adverse health effects, liver or kidney problems, or nervous system effects, and may lead to an increased risk of getting cancer.
Turbidity (NTU)	TT.	-	TT	n/a	Soil runoff	Turbidity has no health effects. However, turbidity can interfere with disinfection and provide a medium for microbial growth. Turbidity may indicate the presence of disease-causing organisms. These organisms include bacteria, viruses, and parasites that can cause symptoms such as nausea, cramps, diarrhea and associated headaches.
Giardia lamblia Viruses *Cryptosporidium*	TT.	-	TT.	n/a	Human and animal fecal waste	Inadequately treated water may contain disease-causing organisms. These organisms include bacteria viruses, and parasites which can cause symptoms such as nausea, cramps, diarrhea, and associated headaches.
Heterotrophic plate count (HPC) bacteria	TT.	-	TT.	n/a	HPC measures a range of bacteria that are naturally present in the environment	Inadequately treated water may contain disease-causing organisms. These organisms include bacteria viruses, and parasites which can cause symptoms such as nausea, cramps, diarrhea, and associated headaches.
Legionella	TT.	-	TT.	n/a	Found naturally in water; multiplies in heating systems	Inadequately treated water may contain disease-causing organisms. These organisms include bacteria viruses, and parasites which can cause symptoms such as nausea, cramps, diarrhea, and associated headaches.
Radioactive Contaminants						
Beta/photon emitters (mrem/yr)	4 mrem/yr	-	4	n/a 0	Decay of natural and man-made deposits	Certain minerals are radioactive and may emit forms of radiation known as photons and beta radiation. Some people who drink water containing beta and photon emitters in excess of the MCL over many years may have an increased risk of getting cancer.
Alpha emitters (pCi/l)	15 pCi/l	-	15	n/a 0	Erosion of natural deposits	Certain minerals are radioactive and may emit a form of radiation known as alpha radiation. Some people who drink water containing alpha emitters in excess of the MCL over many years may have an increased risk of getting cancer.
Combined radium (pCi/l)	5 pCi/l	-	5	n/a 0	Erosion of natural deposits	Some people who drink water containing radium 226 or 228 in excess of the MCL over many years may have an increased risk of getting cancer.

Contaminant (units)	traditional MCL in mg/L	to convert for CCR, multiply by	MCL in CCR units	MCLG	Major Sources in Drinking Water	Health Effects Language
Uranium (pCi/l)	30 micro g/l	-	30	0	Erosion of natural deposits	Some people who drink water containing uranium in excess of the MCL over many years may have an increased risk of getting cancer and kidney toxicity.
Inorganic Contaminants						
Antimony (ppb)	.006	1000	6	6	Discharge from petroleum refineries; fire retardants; ceramics; electronics; solder	Some people who drink water containing antimony well in excess of the MCL over many years could experience increases in blood cholesterol and decreases in blood sugar.
Arsenic (ppb) *Effective 1/23/06	.05 0.010	1000 1000	50 10	n/a 0	Erosion of natural deposits; Runoff from orchards; Runoff from glass and electronics production wastes	Some people who drink water containing arsenic in excess of the MCL over many years could experience skin damage or problems with their circulatory system, and may have an increased risk of getting cancer.
Asbestos (MFL)	7 MFL	-	7	7	Decay of asbestos cement water mains; Erosion of natural deposits	Some people who drink water containing asbestos in excess of the MCL over many years may have an increased risk of developing benign intestinal polyps.
Barium (ppm)	2	-	2	2	Discharge of drilling wastes; Discharge from metal refineries; Erosion of natural deposits	Some people who drink water containing barium in excess of the MCL over many years could experience an increase in their blood pressure.
Beryllium (ppb)	.004	1000	4	4	Discharge from metal refineries and coal-burning factories; Discharge from electrical, aerospace, and defense industries	Some people who drink water containing beryllium well in excess of the MCL over many years could develop intestinal lesions.
Cadmium (ppb)	.005	1000	5	5	Corrosion of galvanized pipes; Erosion of natural deposits; Discharge from metal refineries; Runoff from waste batteries and paints	Some people who drink water containing cadmium in excess of the MCL over many years could experience kidney damage.
Chromium (ppb)	.1	1000	100	100	Discharge from steel and pulp mills; Erosion of natural deposits	Some people who use water containing chromium well in excess of the MCL over many years could experience allergic dermatitis.
Copper (ppm)	AL = 1.3	-	AL = 1.3	1.3	Corrosion of household plumbing systems; Erosion of natural deposits	Copper is an essential nutrient, but some people who drink water containing copper in excess of the action level over a relatively short amount of time could experience gastrointestinal distress. Some people who drink water containing copper in excess of the action level over many years could suffer liver or kidney damage. People with Wilson's Disease should consult their personal doctor.
Cyanide (ppb)	.2	1000	200	200	Discharge from steel/metal factories; Discharge from plastic and fertilizer factories	Some people who drink water containing cyanide well in excess of the MCL over many years could experience nerve damage or problems with their thyroid.

Contaminant (units)	traditional MCL in mg/L	to convert for CCR, multiply by	MCL in CCR units	MCLG	Major Sources in Drinking Water	Health Effects Language
Fluoride (ppm)	4	-	4	4	Erosion of natural deposits; Water additive which promotes strong teeth; Discharge from fertilizer and aluminum factories	Some people who drink water containing fluoride in excess of the MCL over many years could get bone disease, including pain and tenderness of the bones. Fluoride in drinking water at half the MCL or more may cause mottling of children's teeth, usually in children less than nine years old. Mottling, also known as dental fluorosis, may include brown staining and/or pitting of the teeth, and occurs only in developing teeth before they erupt from the gums.
Lead (ppb)	AL = .015	1000	AL = 15	0	Corrosion of household plumbing systems; Erosion of natural deposits	Infants and children who drink water containing lead in excess of the action level could experience delays in their physical or mental development. Children could show slight deficits in attention span and learning abilities. Adults who drink this water over many years could develop kidney problems or high blood pressure.
Mercury [inorganic] (ppb)	.002	1000	2	2	Erosion of natural deposits; Discharge from refineries and factories; Runoff from landfills; Runoff from cropland	Some people who drink water containing inorganic mercury well in excess of the MCL over many years could experience kidney damage.
Nitrate (ppm)	10	-	10	10	Runoff from fertilizer use; Leaching from septic tanks, sewage; Erosion of natural deposits	Infants below the age of six months who drink water containing nitrate in excess of the MCL could become seriously ill and, if untreated, may die. Symptoms include shortness of breath and blue baby syndrome.
Nitrite (ppm)	1	-	1	1	Runoff from fertilizer use; Leaching from septic tanks, sewage; Erosion of natural deposits	Infants below the age of six months who drink water containing nitrite in excess of the MCL could become seriously ill and, if untreated, may die. Symptoms include shortness of breath and blue baby syndrome.
Selenium (ppb)	.05	1000	50	50	Discharge from petroleum and metal refineries; Erosion of natural deposits; Discharge from mines	Selenium is an essential nutrient. However, some people who drink water containing selenium in excess of the MCL over many years could experience hair or fingernail losses, numbness in fingers or toes, or problems with their circulation.
Thallium (ppb)	.002	1000	2	0.5	Leaching from ore-processing sites; Discharge from electronics, glass, and drug factories	Some people who drink water containing thallium in excess of the MCL over many years could experience hair loss, changes in their blood, or problems with their kidneys, intestines, or liver.
Synthetic Organic Contaminants including Pesticides and Herbicides						
2,4-D (ppb)	.07	1000	70	70	Runoff from herbicide used on row crops	Some people who drink water containing the weed killer 2,4-D well in excess of the MCL over many years could experience problems with their kidneys, liver, or adrenal glands.

Contaminant (units)	traditional MCL in mg/L	to convert for CCR, multiply by	MCL in CCR units	MCLG	Major Sources in Drinking Water	Health Effects Language
2,4,5-TP [Silvex](ppb)	.05	1000	50	50	Residue of banned herbicide	Some people who drink water containing silvex in excess of the MCL over many years could experience liver problems.
Acrylamide	TT	-	TT	0	Added to water during sewage/ wastewater treatment	Some people who drink water containing high levels of acrylamide over a long period of time could have problems with their nervous system or blood, and may have an increased risk of getting cancer.
Alachlor (ppb)	.002	1000	2	0	Runoff from herbicide used on row crops	Some people who drink water containing alachlor in excess of the MCL over many years could have problems with their eyes, liver, kidneys, or spleen, or experience anemia, and may have an increased risk of getting cancer.
Atrazine (ppb)	.003	1000	3	3	Runoff from herbicide used on row crops	Some people who drink water containing atrazine well in excess of the MCL over many years could experience problems with their cardiovascular system or reproductive difficulties.
Benzo(a)pyrene [PAH] (nanograms/l)	.0002	1,000,000	200	0	Leaching from linings of water storage tanks and distribution lines	Some people who drink water containing benzo(a)pyrene in excess of the MCL over many years may experience reproductive difficulties and may have an increased risk of getting cancer.
Carbofuran (ppb)	.04	1000	40	40	Leaching of soil fumigant used on rice and alfalfa	Some people who drink water containing carbofuran in excess of the MCL over many years could experience problems with their blood, or nervous or reproductive systems.
Chlordane (ppb)	.002	1000	2	0	Residue of banned termiticide	Some people who drink water containing chlordane in excess of the MCL over many years could experience problems with their liver or nervous system, and may have an increased risk of getting cancer.
Dalapon (ppb)	.2	1000	200	200	Runoff from herbicide used on rights of way	Some people who drink water containing dalapon well in excess of the MCL over many years could experience minor kidney changes.
Di(2-ethylhexyl) adipate (ppb)	.4	1000	400	400	Discharge from chemical factories	Some people who drink water containing di (2-ethylhexyl) adipate well in excess of the MCL over many years could experience toxic effects or reproductive difficulties.
Di(2-ethylhexyl) phthalate (ppb)	.006	1000	6	0	Discharge from rubber and chemical factories	Some people who drink water containing di (2-ethylhexyl) phthalate well in excess of the MCL over many years may have problems with their liver, or experience reproductive difficulties, and may have an increased risk of getting cancer.
Dibromochloropropane (ppt)	.0002	1,000,000	200	0	Runoff/leaching from soil fumigant used on soybeans, cotton, pineapples, and orchards	Some people who drink water containing DBCP in excess of the MCL over many years could experience reproductive problems and may have an increased risk of getting cancer.

Contaminant (units)	traditional MCL in mg/L	to convert for CCR, multiply by	MCL in CCR units	MCLG	Major Sources in Drinking Water	Health Effects Language
Dinoseb (ppb)	.007	1000	7	7	Runoff from herbicide used on soybeans and vegetables	Some people who drink water containing dinoseb well in excess of the MCL over many years could experience reproductive difficulties.
Diquat (ppb)	.02	1000	20	20	Runoff from herbicide use	Some people who drink water containing diquat in excess of the MCL over many years could get cataracts.
Dioxin [2,3,7,8-TCDD] (ppq)	.00000003	1,000,000,000	30	0	Emissions from waste incineration and other combustion; Discharge from chemical factories	Some people who drink water containing dioxin in excess of the MCL over many years could experience reproductive difficulties and may have an increased risk of getting cancer.
Endothall (ppb)	.1	1000	100	100	Runoff from herbicide use	Some people who drink water containing endothall in excess of the MCL over many years could experience problems with their stomach or intestines.
Endrin (ppb)	.002	1000	2	2	Residue of banned insecticide	Some people who drink water containing endrin in excess of the MCL over many years could experience liver problems.
Epichlorohydrin	TT	-	TT	0	Discharge from industrial chemical factories; An impurity of some water treatment chemicals	Some people who drink water containing high levels of epichlorohydrin over a long period of time could experience stomach problems, and may have an increased risk of getting cancer.
Ethylene dibromide (ppt)	.00005	1,000,000	50	0	Discharge from petroleum refineries	Some people who drink water containing ethylene dibromide in excess of the MCL over many years could experience problems with their liver, stomach, reproductive system, or kidneys, and may have an increased risk of getting cancer.
Glyphosate (ppb)	.7	1000	700	700	Runoff from herbicide use	Some people who drink water containing glyphosate in excess of the MCL over many years could experience problems with their kidneys or reproductive difficulties.
Heptachlor (ppt)	.0004	1,000,000	400	0	Residue of banned pesticide	Some people who drink water containing heptachlor in excess of the MCL over many years could experience liver damage and may have an increased risk of getting cancer.
Heptachlor epoxide (ppt)	.0002	1,000,000	200	0	Breakdown of heptachlor	Some people who drink water containing heptachlor epoxide in excess of the MCL over many years could experience liver damage, and may have an increased risk of getting cancer.
Hexachlorobenzene (ppb)	.001	1000	1	0	Discharge from metal refineries and agricultural chemical factories	Some people who drink water containing hexachlorobenzene in excess of the MCL over many years could experience problems with their liver or kidneys, or adverse reproductive effects, and may have an increased risk of getting cancer.

Contaminant (units)	traditional MCL in mg/L	to convert for CCR, multiply by	MCL in CCR units	MCLG	Major Sources in Drinking Water	Health Effects Language
Hexachlorocyclo-pentadiene (ppb)	.05	1000	50	50	Discharge from chemical factories	Some people who drink water containing hexachlorocyclopentadiene well in excess of the MCL over many years could experience problems with their kidneys or stomach.
Lindane (ppt)	.0002	1,000,000	200	200	Runoff/leaching from insecticide used on cattle, lumber, gardens	Some people who drink water containing lindane in excess of the MCL over many years could experience problems with their kidneys or liver.
Methoxychlor (ppb)	.04	1000	40	40	Runoff/leaching from insecticide used on fruits, vegetables, alfalfa, livestock	Some people who drink water containing methoxychlor in excess of the MCL over many years could experience reproductive difficulties.
Oxamyl [Vydate] (ppb)	.2	1000	200	200	Runoff/leaching from insecticide used on apples, potatoes and tomatoes	Some people who drink water containing oxamyl in excess of the MCL over many years could experience slight nervous system effects.
PCBs [Polychlorinated biphenyls] (ppt)	.0005	1,000,000	500	0	Runoff from landfills; Discharge of waste chemicals	Some people who drink water containing PCBs in excess of the MCL over many years could experience changes in their skin, problems with their thymus gland, immune deficiencies, or reproductive or nervous system difficulties, and may have an increased risk of getting cancer.
Pentachlorophenol (ppb)	.001	1000	1	0	Discharge from wood preserving factories	Some people who drink water containing pentachlorophenol in excess of the MCL over many years could experience problems with their liver or kidneys, and may have an increased risk of getting cancer.
Picloram (ppb)	.5	1000	500	500	Herbicide runoff	Some people who drink water containing picloram in excess of the MCL over many years could experience problems with their liver.
Simazine (ppb)	.004	1000	4	4	Herbicide runoff	Some people who drink water containing simazine in excess of the MCL over many years could experience problems with their blood.
Toxaphene (ppb)	.003	1000	3	0	Runoff/leaching from insecticide used on cotton and cattle	Some people who drink water containing toxaphene in excess of the MCL over many years could have problems with their kidneys, liver, or thyroid, and may have an increased risk of getting cancer.
Volatile Organic Contaminants						
Benzene (ppb)	.005	1000	5	0	Discharge from factories; Leaching from gas storage tanks and landfills	Some people who drink water containing benzene in excess of the MCL over many years could experience anemia or a decrease in blood platelets, and may have an increased risk of getting cancer.
Bromate (ppb)	.010	1000	10	0	By-product of drinking water disinfection	Some people who drink water containing bromate in excess of the MCL over many years may have an increased risk of getting cancer.

Contaminant (units)	traditional MCL in mg/L	to convert for CCR, multiply by	MCL in CCR units	MCLG	Major Sources in Drinking Water	Health Effects Language
Carbon tetrachloride (ppb)	.005	1000	5	0	Discharge from chemical plants and other industrial activities	Some people who drink water containing carbon tetrachloride in excess of the MCL over many years could experience problems with their liver and may have an increased risk of getting cancer.
Chloramines (ppm)	MRDL = 4	-	MRDL = 4	MRDLG = 4	Water additive used to control microbes	Some people who use drinking water containing chloramines well in excess of the MRDL could experience irritating effects to their eyes and nose. Some people who drink water containing chloramines well in excess of the MRDL could experience stomach discomfort or anemia.
Chlorine (ppm)	MRDL = 4	-	MRDL = 4	MRDLG = 4	Water additive used to control microbes	Some people who use drinking water containing chlorine well in excess of the MRDL could experience irritating effects to their eyes and nose. Some people who drink water containing chlorine well in excess of the MRDL could experience stomach discomfort.
Chlorite (ppm)	1	-	1	0.8	By-product of drinking water disinfection	Some infants and young children who drink water containing chlorite in excess of the MCL could experience nervous system effects. Similar effects may occur in fetuses of pregnant mothers who drink water containing chlorite in excess of the MCL. Some people may experience anemia.
Chlorine dioxide (ppb)	MRDL = .8	1000	MRDL = 800	MRDLG = 800	Water additive used to control microbes	Some infants and young children who drink water containing chlorine dioxide in excess of the MRDL could experience nervous system effects. Similar effects may occur in fetuses of pregnant mothers who drink water containing chlorine dioxide in excess of the MRDL. Some people may experience anemia.
Chlorobenzene (ppb)	.1	1000	100	100	Discharge from chemical and agricultural chemical factories	Some people who drink water containing chlorobenzene in excess of the MCL over many years could experience problems with their liver or kidneys.
o-Dichlorobenzene (ppb)	.6	1000	600	600	Discharge from industrial chemical factories	Some people who drink water containing o-dichlorobenzene well in excess of the MCL over many years could experience problems with their liver, kidneys, or circulatory systems.
p-Dichlorobenzene (ppb)	.075	1000	75	75	Discharge from industrial chemical factories	Some people who drink water containing p-dichlorobenzene in excess of the MCL over many years could experience anemia, damage to their liver, kidneys, or spleen, or changes in their blood.
1,2-Dichloroethane (ppb)	.005	1000	5	0	Discharge from industrial chemical factories	Some people who drink water containing 1,2-dichloroethane in excess of the MCL over many years may have an increased risk of getting cancer.

Contaminant (units)	traditional MCL in mg/L	to convert for CCR, multiply by	MCL in CCR units	MCLG	Major Sources in Drinking Water	Health Effects Language
1,1-Dichloroethylene (ppb)	.007	1000	7	7	Discharge from industrial chemical factories	Some people who drink water containing 1,1-dichloroethylene in excess of the MCL over many years could experience problems with their liver.
cis-1,2-Dichloroethylene (ppb)	.07	1000	70	70	Discharge from industrial chemical factories	Some people who drink water containing cis-1,2-dichloroethylene in excess of the MCL over many years could experience problems with their liver.
trans-1,2-Dichloroethylene (ppb)	.1	1000	100	100	Discharge from industrial chemical factories	Some people who drink water containing trans-1,2-dichloroethylene well in excess of the MCL over many years could experience problems with their liver.
Dichloromethane (ppb)	.005	1000	5	0	Discharge from pharmaceutical and chemical factories	Some people who drink water containing dichloromethane in excess of the MCL over many years could have liver problems and may have an increased risk of getting cancer.
1,2-Dichloropropane (ppb)	.005	1000	5	0	Discharge from industrial chemical factories	Some people who drink water containing 1,2-dichloropropane in excess of the MCL over many years may have an increased risk of getting cancer.
Ethylbenzene (ppb)	.7	1000	700	700	Discharge from petroleum refineries	Some people who drink water containing ethylbenzene well in excess of the MCL over many years could experience problems with their liver or kidneys.
Haloacetic Acids (HAA) (ppb)	.060	1000	60	n/a	By-product of drinking water disinfection	Some people who drink water containing haloacetic acids in excess of the MCL over many years may have an increased risk of getting cancer.
Styrene (ppb)	.1	1000	100	100	Discharge from rubber and plastic factories; Leaching from landfills	Some people who drink water containing styrene well in excess of the MCL over many years could have problems with their liver, kidneys, or circulatory system.
Tetrachloroethylene (ppb)	.005	1000	5	0	Discharge from factories and dry cleaners	Some people who drink water containing tetrachloroethylene in excess of the MCL over many years could have problems with their liver, and may have an increased risk of getting cancer.
1,2,4-Trichlorobenzene (ppb)	.07	1000	70	70	Discharge from textile-finishing factories	Some people who drink water containing 1,2,4-trichlorobenzene well in excess of the MCL over many years could experience changes in their adrenal glands.
1,1,1-Trichloroethane (ppb)	.2	1000	200	200	Discharge from metal degreasing sites and other factories	Some people who drink water containing 1,1,1-trichloroethane in excess of the MCL over many years could experience problems with their liver, nervous system, or circulatory system.
1,1,2-Trichloroethane (ppb)	.005	1000	5	3	Discharge from industrial chemical factories	Some people who drink water containing 1,1,2-trichloroethane well in excess of the MCL over many years could have problems with their liver, kidneys, or immune systems.

Contaminant (units)	traditional MCL in mg/L	to convert for CCR, multiply by	MCL in CCR units	MCLG	Major Sources in Drinking Water	Health Effects Language
Trichloroethylene (ppb)	.005	1000	5	0	Discharge from metal degreasing sites and other factories	Some people who drink water containing trichloroethylene in excess of the MCL over many years could experience problems with their liver and may have an increased risk of getting cancer.
TTHMs [Total trihalomethanes] (ppb)	.080	1000	80	n/a	By-product of drinking water disinfection	Some people who drink water containing trihalomethanes in excess of the MCL over many years may experience problems with their liver, kidneys, or central nervous systems, and may have an increased risk of getting cancer.
Toluene (ppm)	1	-	1	1	Discharge from petroleum factories	Some people who drink water containing toluene well in excess of the MCL over many years could have problems with their nervous system, kidneys, or liver.
Vinyl Chloride (ppb)	.002	1000	2	0	Leaching from PVC piping: Discharge from plastics factories	Some people who drink water containing vinyl chloride in excess of the MCL over many years may have an increased risk of getting cancer.
Xylenes (ppm)	10	-	10	10	Discharge from petroleum factories; Discharge from chemical factories	Some people who drink water containing xylenes in excess of the MCL over many years could experience damage to their nervous system.

Key
AL = Action Level
MCL = Maximum Contaminant Level
MCLG = Maximum Contaminant Level Goal
MFL = million fibers per liter
MRDL = Maximum Residual Disinfectant Level
MRDLG = Maximum Residual Disinfectant Level Goal
mrem/year = millirems per year (a measure of radiation absorbed by the body)
N/A = Not Applicable
NTU = Nephelometric Turbidity Units (a measure of water clarity)
pCi/1 = picocuries per liter (a measure of radioactivity)
ppm = parts per million, or milligrams per liter (mg/1)
ppb = parts per billion, or micrograms per liter (Φ g/1)
ppt = parts per trillion, or nanograms per liter
ppq = parts per quadrillion, or picograms per liter
TT = Treatment Technique

[Statutory Authority: RCW 70.119A.180 and 43.20.050. 08-03-061, § 246-290-72012, filed 1/14/08, effective 2/14/08. Statutory Authority: RCW 43.20.050 and 70.119A.080. 04-04-056, § 246-290-72012, filed 1/30/04, effective 3/1/04. Statutory Authority: RCW 43.20.050 (2) and (3) and 70.119A.080. 03-08-037, § 246-290-72012, filed 3/27/03, effective 4/27/03. Statutory Authority: RCW 43.20.050. 00-15-080, § 246-290-72012, filed 7/19/00, effective 8/19/00.]

Reviser's note: The brackets and enclosed material in the text of the above section occurred in the copy filed by the agency.

PART 8.
WATER USE EFFICIENCY

WAC 246-290-800 Purpose and applicability. (1) The purpose of Part 8 is to:

(a) Define requirements for water use efficiency programs in water system plans developed under WAC 246-290-100 and small water systems management programs developed under WAC 246-290-105.

(b) Establish a water distribution system leakage standard.

(c) Define process requirements for water use efficiency goal setting.

(d) Establish water use efficiency performance reporting requirements.

(2) The requirements of Part 8 of this chapter apply to public water systems that supply water for municipal water supply purposes.

[Statutory Authority: RCW 70.119A.180. 07-02-025B, § 246-290-800, filed 12/22/06, effective 1/22/07.]

WAC 246-290-810 Water use efficiency program. (1) Water system plans and small water system management programs submitted for approval for the first year after the effective date of this rule, must describe the municipal water supplier's existing water use efficiency program. The municipal water supplier must continue existing levels of water use efficiency.

(2) Subsections (3) and (4) of this section apply to:

(a) Water system plans submitted to the department for approval under WAC 246-290-100 one year after the effective date of this rule.

(b) Small water system management programs developed and implemented or submitted to the department for approval one year after the effective date of this rule.

(3) Municipal water suppliers shall develop and implement a water use efficiency program which includes sufficient cost-effective water use efficiency measures to meet the water use efficiency goals developed under WAC 246-290-830.

(4) Municipal water suppliers shall complete the following items in the water use efficiency program:

(a) Describe the current water use efficiency program;

(b) For systems serving one thousand or more total connections, estimate the amount of water saved through implementation of the water use efficiency program over the last six years;

(c) Describe the chosen water use efficiency goals and document the goals were established in accordance with WAC 246-290-830;

(d) Evaluate water use efficiency measures to determine if they are cost-effective as follows:

(i) Evaluate or implement, at a minimum, the number of water use efficiency measures specified in Table 1 based on the system's total number of connections.

(ii) Evaluate or implement water use efficiency measures from the following categories of measures if they are applicable: Indoor residential, outdoor, and industrial/commercial/institutional.

(iii) For systems serving less than one thousand total connections, describe the evaluation process used to select water use efficiency measures.

(iv) For systems serving one thousand or more total connections, include the following criteria when evaluating water use efficiency measures:

(A) Quantitatively evaluate water use efficiency measures to determine if they are cost-effective from the system's perspective including the marginal costs of producing water.

(B) Address whether the water use efficiency measures are cost-effective if the costs are shared with other entities.

(C) Quantitatively or qualitatively evaluate water use efficiency measures to determine if they are cost-effective from the societal perspective.

Table 1

Number of connections	Less than 500	500-999	1,000-2,499	2,500-9,999	10,000-49,999	50,000 or more
Water use efficiency measures	1	4	5	6	9	12

(e) Describe all water use efficiency measures to be implemented within the next six years including a schedule and a budget that demonstrates how the water use efficiency measures will be funded;

(f) Describe how consumers will be educated on water use efficiency practices;

(g) Estimate projected water savings from selected water use efficiency measures;

(h) Describe how the water use efficiency program will be evaluated for effectiveness;

(i) Evaluate water distribution system leakage as follows:

(i) Include distribution system leakage totals in accordance with WAC 246-290-820 for the past six years.

(ii) If necessary, include a copy of the water loss control action plan in accordance with WAC 246-290-820(4).

(iii) If all or portions of transmission lines are excluded when determining distribution system leakage, estimate the amount of leakage from the excluded portion of the transmission mains and describe how it is maintained to minimize leakage.

[Statutory Authority: RCW 70.119A.180. 07-02-025B, § 246-290-810, filed 12/22/06, effective 1/22/07.]

WAC 246-290-820 Distribution system leakage standard. (1) Municipal water suppliers shall determine distribution system leakage annually under subsection (2) of this section or an alternative methodology under subsection (3) of this section.

(a) Municipal water suppliers shall include (i), (ii), or (iii) of this subsection in water use efficiency performance reports developed under WAC 246-290-840 and water use efficiency programs developed under WAC 246-290-810:

(i) Distribution system leakage totals calculated under subsection (2) of this section shall be recorded in annual percent and volume;

(ii) Distribution system leakage totals calculated under subsection (3) of this section shall include annual figures and the approved alternative methodology's numerical standard(s); and

(iii) For systems not fully metered, the status of meter installation and any actions taken to minimize leakage.

(b) Municipal water suppliers will be considered in compliance with this section if any of the following conditions are satisfied:

(i) Distribution system leakage calculated in accordance with subsection (2) of this section is ten percent or less for the last three-year average;

(ii) Distribution system leakage calculated under subsection (3) of this section meets the numerical standards for the approved alternative methodology for the last three-year average;

(iii) For systems serving less than five hundred total connections, distribution system leakage calculated in accordance with subsection (2) of this section is twenty percent or less for the last three-year average and the steps outlined in subsection (5) of this section are completed; or

(iv) A water loss control action plan has been developed and implemented under subsection (4) of this section and the system is meeting the implementation schedule.

(2) Calculate the percent of distribution system leakage annually using the following equation:

$$DSL = [(TP - AC)/(TP)] \times 100$$

Where:

DSL	=	Percent of Distribution System Leakage (%)
TP	=	Total Water Produced and Purchased
AC	=	Authorized Consumption

(a) Total water produced and purchased, and authorized consumption must be calculated using data from meters installed under WAC 246-290-496. Elements of authorized consumption that cannot be metered, such as fire flow, must be estimated.

(b) All or portions of transmission lines may be excluded when determining distribution system leakage.

(c) Any water that cannot be accounted for shall be considered distribution system leakage.

(3) Municipal water suppliers may use an alternative methodology to calculate distribution system leakage if both (a) and (b) of this subsection are satisfied.

(a) The alternative methodology is contained in published standards or specifications of the department, Environmental Protection Agency, American Water Works Association, American Public Works Association, or American Society of Civil Engineers.

(b) The alternative methodology is approved for statewide use by the department, to provide a better evaluation of distribution system leakage than percent of total water produced and purchased, is appropriate for the system requesting to use it, and uses numerical standards so that compliance and action levels can be determined.

(4) If the average distribution system leakage for the last three years does not meet the standard calculated under subsection (1)(b)(i), (ii), or (iii) of this section, the municipal water supplier shall develop and implement a water loss control action plan. Municipal water suppliers shall submit the water loss control action plan to the department as part of a water use efficiency program under WAC 246-290-810 and upon request by the department. The control methods described in a water loss control action plan shall be commensurate with the level of leakage reported. The following items shall be included in the water loss control action plan:

(a) The control methods necessary to achieve compliance with the distribution system leakage standard;

(b) An implementation schedule;

(c) A budget that demonstrates how the control methods will be funded;

(d) Any technical or economic concerns which may affect the system's ability to implement a program or comply with the standard including past efforts and investments to minimize leakage;

(e) If the average distribution system leakage calculated under subsection (2) of this section is greater than ten and less than twenty percent of total water produced and purchased, the water loss control action plan must assess data accuracy and data collection;

(f) If the average distribution system leakage calculated under subsection (2) of this section is between twenty and twenty-nine percent of total water produced and purchased, the water loss control action plan must include elements listed under (e) of this subsection and implementation of field activities such as actively repairing leaks or maintaining meters within twelve months of determining standard exceedance;

(g) If the average distribution system leakage calculated under subsection (2) of this section is at thirty percent or above the total water produced and purchased, the water loss control action plan must include elements listed under (e) and (f) of this subsection and include implementation of additional control methods to reduce leakage within six months of determining standard exceedance; and

(h) If the average distribution system leakage calculated under subsection (3) of this section is over the approved alternative methodology's numerical standard, the department will take appropriate compliance actions and work collaboratively with the municipal water supplier to ensure the control methods and level of activity are commensurate with the level of leakage.

(5) Systems serving less than five hundred total connections may submit a request to the department for approval of an average distribution system leakage up to twenty percent. The following information must be submitted to the department with the request:

(a) Production volume;

(b) Distribution system leakage volume;

(c) Evidence documenting that:

(i) A leak detection survey using best available technologies has been completed on the system within the past six years;

(ii) All leaks found have been repaired;

(iii) The system is unable to locate additional leaks; and

(iv) Ongoing efforts to minimize leakage are included as part of the system's water use efficiency program; and

(d) Any technical concerns or economic concerns, or other system characteristics justifying the higher distribution system leakage.

[Statutory Authority: RCW 70.119A.180 and 43.20.050. 08-03-061, § 246-290-820, filed 1/14/08, effective 2/14/08. Statutory Authority: RCW 70.119A.180. 07-02-025B, § 246-290-820, filed 12/22/06, effective 1/22/07.]

Reviser's note: The brackets and enclosed material in the text of the above section occurred in the copy filed by the agency.

WAC 246-290-830 Water use efficiency goal setting. (1) The elected governing board or governing body of the public water system shall establish water use efficiency goals within one year of the effective date of this rule for systems serving one thousand or more total connections, and within two years of the effective date of this rule for systems serving less than one thousand total connections.

(2) Water use efficiency goals must be designed to enhance the efficient use of water by the water system's consumers.

(3) If a municipal water supplier determines that further reductions over current consumption levels are not reasonably achievable, the municipal water supplier shall provide justification that considers historic water use efficiency performance and investment and any other factors that support that determination. Justification must be provided in water use efficiency programs developed under WAC 246-290-810 and in water use efficiency performance reports developed under WAC 246-290-840.

(4) Municipal water suppliers must provide documentation when requested by the department and in water use efficiency programs developed under WAC 246-290-810 that demonstrates the following goal setting requirements have been met:

(a) Goals shall be set in a public forum that provides opportunity for consumers and the public to participate and comment on the water use efficiency goals;

(b) Public notice must occur at least two weeks prior to the public forum. Public notice must include the purpose, date, time, and place of the forum, and where materials supporting the rationale for the proposed goals can be reviewed;

(c) The elected governing board or governing body of the public water system shall review and consider all comments received;

(d) The following must be made available to the public for the purpose of fully documenting the basis for each goal:

(i) The information listed under WAC 246-290-810(4);

(ii) Annual water use efficiency performance reports prepared under WAC 246-290-840;

(iii) Water supply characteristics description in accordance with WAC 246-290-100 (4)(f)(iii)(B) or source description in accordance with WAC 246-290-105 (4)(f); and

(iv) A summary of the comments received and how they were considered.

(5) Existing public processes may be used if all requirements listed under subsection (4) of this section are met.

(6) Water use efficiency goals must include:

(a) Consideration of the system's forecasted demand and water supply characteristics;

(b) Measurable outcomes in terms of reduced or maintained water production or usage. Outcomes may be expressed on a per capita, per connection, total system, or other basis as deemed appropriate by the municipal water supplier;

(c) A schedule for achieving the water use efficiency goals; and

(d) Implementation schedule for each water use efficiency measure selected under WAC 246-290-810(4).

(7) The elected governing board or governing body of the public water system shall evaluate and reestablish water use efficiency goals following the process identified in subsection (4) of this section at least every six years and as part of a water system plan approval under WAC 246-290-100 or small water system management program approval under WAC 246-290-105.

(8) Water use efficiency goals may be changed at any time in accordance with subsection (4) of this section. Changes to goals must be identified in the next performance report.

(9) Water use efficiency programs must be modified if any water use efficiency goal is not met. Program modifications must be designed to achieve the system's water use efficiency goals.

[Statutory Authority: RCW 70.119A.180. 08-12-019, § 246-290-830, filed 5/28/08, effective 7/1/08; 07-02-025B, § 246-290-830, filed 12/22/06, effective 1/22/07.]

WAC 246-290-840 Water use efficiency performance reports. (1) Municipal water suppliers shall develop an annual water use efficiency performance report and must:

(a) Send the water use efficiency performance reports to the department and the consumers by July 1st of each year for the previous year and make them available to the public;

(b) For systems serving one thousand or more total connections, develop the first water use efficiency performance report by July 1, 2008;

(c) For systems serving less than one thousand total connections, develop the first water use efficiency performance report by July 1, 2009; and

(d) Municipal water suppliers shall submit performance reports in a manner specified by the department.

(2) Water use efficiency performance reports shall include:

(a) Total annual production. Systems with multiple sources may provide aggregate data;

(b) Annual water distribution system leakage totals in accordance with WAC 246-290-820;

(c) A description of the system's water use efficiency goals set in accordance with WAC 246-290-830;

(d) A schedule for achieving the goals;

(e) A narrative description of progress toward achieving the goals; and

(f) Report the status of meter installation and all actions taken to minimize leakage.

[Statutory Authority: RCW 70.119A.180. 07-02-025B, § 246-290-840, filed 12/22/06, effective 1/22/07.]

FEES

WAC 246-290-990 Water system evaluation and project review and approval fees. (1) The fees for the review and approval of water system plans, project reports, construction documents, existing systems, and related evaluations required under chapters 246-290, 246-291, 246-293, 246-294, and 246-295 WAC are:

(a) Water system plans required under WAC 246-290-100, 246-290-105, 246-291-140, 246-293-220, and 246-293-230.

		Group A				
Project Type	Group B	<100 Services	100 to 500 Services	501 to 999 Services	1,000 to 9,999 Services	10,000 or more Services
Water system plan (New and Updated)	$138	$491	$1,206	$2,280	$3,705	$5,484
Minor water system plan alteration	$31	$115	$293	$565	$919	$1,349

(b) Satellite management agency (SMA) plans for Group A and Group B water systems required under WAC 246-295-040.

Project Type	Total Active or Approved Services <100 Services	100 to 500 Services	501 to 999 Services	1,000 to 9,999 Services	10,000 or more Services
SMA plan for ownership (New and Updated)	$491	$1,206	$2,280	$3,705	$5,484
SMA approval amendment	$102 per hour or appropriate fee from category above, whichever is less				
SMA plan for operation only (New and Updated)	$1,206	$1,206	$1,206	$1,206	$1,206

Note: SMAs owning water systems and submitting planning documents to the department for review shall be charged only the SMA fee.

(c) New plan elements required under WAC 246-290-100, 246-290-105, 246-290-125, 246-290-132, 246-290-135, 246-290-691, and 246-291-140 including:

(i) Water use efficiency; and

(ii) Wellhead protection, shall be reviewed separately by the department and the fee assessed shall reflect the time spent for this review and shall be calculated based on one hundred two dollars per hour. After the initial submittal, updated information shall be reviewed as part of the updated water system plan and the review fee shall be included in the applicable updated plan review fee listed under (a) or (b) of this subsection.

(d) Project reports required under WAC 246-290-110 and design reports required under WAC 246-291-120.

Project Type	Group B	Group A <100 Services	100 to 500 Services	501 to 999 Services	1,000 to 9,999 Services	10,000 or more Services
All types of filtration or other complex treatment processes	$348	$710	$1,103	$1,598	$2,204	$2,922
Chemical addition only, such as ion exchange, hypochlorination, or fluoridation	$102	$205	$348	$525	$743	$994
Complete water system (an additional fee shall be assessed for review of treatment facility, if any)	$205	$491	$778	$1,137	$1,564	$2,061
System modifications requiring a detailed evaluation to determine whether the system, as modified, will comply with regulations (an additional fee shall be assessed for review of treatment facility, if any)	$138	$348	$565	$851	$1, 206	$1,626

Note: In accordance with WAC 246-290-125, project reports are not required for minor projects that are described in sufficient detail in an approved water system plan, and have been reviewed as part of the process for approving the water system plan.

(e) Special reports or plans required under WAC 246-290-230, 246-290-235, 246-290-250, 246-290-470, 246-290-636, 246-290-640, 246-290-654, 246-290-676, 246-291-230 including:

(i) Corrosion control recommendation report;

(ii) Corrosion control study;

(iii) Plan to cover uncovered reservoirs;

(iv) Predesign study;

(v) Uncovered reservoir plan of operation;

(vi) Tracer study plan;

(vii) Surface water or GWI treatment facility operations plan;

(viii) Filtration pilot study; or

(ix) GWI determination reports, shall be reviewed by the department and the fee assessed shall reflect the time spent for this review and shall be calculated based on one hundred two dollars per hour.

(f) Construction documents required under WAC 246-290-120 and design reports required under WAC 246-291-120.

Project Type	Group B	Group A <100 Services	100 to 500 Services	501 to 999 Services	1,000 to 9,999 Services	10,000 or more Services
All types of filtration or other complex treatment processes	$348	$710	$1,103	$1,598	$2,204	$2,922
Chemical addition only, such as ion exchange, hypochlorination, or fluoridation	$102	$205	$348	$525	$743	$994
Complete new water system except treatment (an additional fee shall be assessed for review of treatment facility, if any)	$281	$633	$919	$1,279	$1,709	$2,204
New source only (an additional fee shall be assessed for review of treatment facility, if any)	$205	$382	$525	$710	$919	$1,172

Project Type	Group B	Group A <100 Services	100 to 500 Services	501 to 999 Services	1,000 to 9,999 Services	10,000 or more Services
One or more of the following submitted as a package and not requiring a detailed evaluation as determined by the department: Water line installation, booster pump station, modifications to source pumping, piping-valving, controls or storage reservoir (an additional fee shall be assessed for review of treatment facility, if any)	$138	$241	$382	$565	$778	$1,027
Documents submitted for projects such as water line installation, booster pump stations, modifications to source pumping, piping/valving, controls or storage reservoirs as determined by the department where such projects: Comply with design standards established by the department; Are prepared by a professional engineer in accordance with WAC 246-290-040; and Do not require a detailed evaluation by the department.	$64	$118	$198	$281	$389	$512

(g) Existing system approval required under WAC 246-290-140 and 246-291-130. For the purpose of this subsection the department shall determine whether a system is expanding or nonexpanding.

Project Type	Group B	Group A <100 Services	100 to 500 Services	501 to 999 Services	1,000 to 9,999 Services	10,000 or more Services
NONEXPANDING system not requiring a detailed evaluation by the department	$268	$539	$811	$1,083	$1,355	$1,626
NONEXPANDING system requiring a detailed evaluation as determined by the department	$404	$811	$1,229	$1,626	$2,034	$2,441
EXPANDING system not requiring a detailed evaluation by the department	$539	$1,083	$1,626	$2,169	$2,714	$3,256
EXPANDING system requiring a detailed evaluation as determined by the department	$676	$1,355	$2,034	$2,714	$3,391	$4,072

(h) Monitoring waivers requested under WAC 246-290-300.

Project Type	Group B	Group A <100 Services	100 to 500 Services	501 to 999 Services	1,000 to 9,999 Services	10,000 or more Services
Inorganic chemical monitoring waiver	Not applicable	$88 per source	$123 per source	$155 per source	$188 per source	$221 per source
Organic chemical monitoring waiver	Not applicable	$161 per source	$226 per source	$294 per source	$359 per source	$425 per source
Use waiver	Not applicable	$193 per source	$260 per source	$334 per source	$392 per source	$459 per source
Area wide waiver renewal	Not applicable	$193 per source	$240 per source	$287 per source	$334 per source	$369 per source
Inorganic chemical monitoring waiver renewal	Not applicable	$48 per source	$62 per source	$75 per source	$88 per source	$102 per source
Organic chemical monitoring waiver renewal	Not applicable	$95 per source	$135 per source	$176 per source	$215 per source	$254 per source

Project Type	Group B	Group A <100 Services	100 to 500 Services	501 to 999 Services	1,000 to 9,999 Services	10,000 or more Services
Use waiver renewal	Not applicable	$135 per source	$181 per source	$226 per source	$273 per source	$320 per source
Coliform monitoring waiver including departmental inspection requested by purveyor	Not applicable	$414	$512	$652	$830	Not applicable
Coliform monitoring waiver with third-party inspection report	Not applicable	$128	$128	$128	$128	Not applicable

(i) Other evaluations and approvals. As applicable, these fees will be charged in addition to the basic fees assessed under (a) through (h) of this subsection.

Project Type	Group B	Group A <100 Services	100 to 500 Services	501 to 999 Services	1,000 to 9,999 Services	10,000 or more Services
Well-site evaluation and approval including the site inspection and hydrogeologic information review.	$205	$309	$363	$451	$565	$710
Regulatory monitoring plan[1]	No plan required	$198	$268	$337	$404	$471
Unfiltered system annual comprehensive report	Not applicable	$404	$676	$947	$1,218	$1,489
[1]A comprehensive document containing coliform, inorganic chemical and organic chemical monitoring plans in accordance with WAC 246-290-300.						
Water system compliance report	$115	$115	$115	$115	$115	$115

(2) To determine the appropriate fee for a noncommunity system, calculate the service equivalent by taking the average population served each day of operation and dividing by twenty-five for a transient noncommunity (TNC) system and two and one-half for nontransient noncommunity (NTNC) system. Use the number of service equivalents to find out what Group A size category to look under and submit the appropriate fee. (All noncommunity systems are Group A systems as described in WAC 246-290-020.)

(3) Additional review and approval fees may be assessed as follows:

(a) The basic fee covers an evaluation, or the review of an initial submittal and one resubmittal if required. If additional resubmittals are required, an additional twenty-five percent of the original fee will be assessed for each additional resubmittal. For water system plan and SMA plan preparation the basic fee also covers a preplanning conference;

(b) Fees for department project approval based on local technical review will be determined on a case-by-case basis as outlined in the applicable memorandum of understanding between the department and the respective local agency;

(c) Fees may be assessed for services which the department determines are not described under subsection (1) of this section. If assessed, the fees will be calculated based on a rate of one hundred two dollars per hour.

Examples of these services include, but are not limited to:

(i) Review and inspection of water reuse projects;

(ii) Collection of water quality samples requested by purveyor;

(iii) Review of alternate technologies requested by purveyor, manufacturer or authorized representative;

(iv) Sanitary surveys, including the time spent as part of the annual on-site inspections for systems under WAC 246-290-690(3) that is in addition to the time necessary to assess watershed control and disinfection treatment;

(v) Well field designations; or

(vi) Transfers of ownership under WAC 246-290-035 or 246-294-060.

(d) Additional fees assessed by the department shall be billed to the purveyor using an itemized invoice.

(4) If the legislature revises the water system operating permit fee under RCW 70.119A.110 to incorporate into it one or more fees for service currently assessed separately under this section, and the purveyor has paid that consolidated fee, the department shall not assess or collect a separate fee under this section for any such service.

(5) All fees required under this section except as noted in subsection (3) of this section, shall be submitted prior to the department's approval. Payment of fees shall be in the form of a check or money order made payable to: The Department of Health, P.O. Box 1099, Olympia, Washington 98507-1099. Payment of a fee shall not guarantee approval of the submitted document or evaluation request.

(6) Purveyors unable to determine the appropriate fee payment to submit should contact the department.

[Statutory Authority: RCW 43.70.250 and 43.20B.020. 07-14-128, § 246-290-990, filed 7/3/07, effective 8/3/07. Statutory Authority: RCW 70.119A.180. 07-02-025B, § 246-290-990, filed 12/22/06, effective 1/22/07. Statutory Authority: RCW 43.70.250 and 70.119.160. 04-12-123, § 246-290-990, filed 6/2/04, effective 7/3/04. Statutory Authority: RCW 43.70.-250, 43.20B.020, and 70.119.160. 03-13-028, § 246-290-990, filed 6/10/03, effective 7/11/03. Statutory Authority: RCW 43.70.250 and 70.119.160. 02-01-065, § 246-290-990, filed 12/14/01, effective 1/14/02. Statutory Authority: RCW 43.70.250. 00-02-015, § 246-290-990, filed 12/27/99, effective 1/27/00; 99-12-022, § 246-290-990, filed 5/24/99, effective 6/24/99. Statutory Authority: RCW 43.20B.020. 98-11-068, § 246-290-990, filed 5/19/98, effective 6/19/98; 97-12-032, § 246-290-990, filed 5/30/97, effective 6/30/97; 95-20-079, § 246-290-990, filed 10/4/95, effective 11/4/95; 93-01-006 (Order 315), § 246-290-990, filed 12/3/92, effective 1/3/93. Statutory Authority: RCW 43.70.040. 91-02-049 (Order 121), recodified as § 246-290-990, filed 12/27/90, effective 1/31/91. Statutory Authority: RCW

43.20A.055. 87-14-066 (Order 2493), § 440-44-048, filed 7/1/87; 83-14-038 (Order 1980), § 440-44-048, filed 6/30/83.]

Chapter 246-291 WAC
GROUP B PUBLIC WATER SYSTEMS

WAC

246-291-001	Purpose and scope.
246-291-010	Definitions.
246-291-020	Applicability.
246-291-025	Bottled water.
246-291-030	General administration.
246-291-040	Requirements for engineers.
246-291-050	Enforcement.
246-291-060	Waivers.
246-291-100	Ground water source approval and protection.
246-291-110	Surface water and GWI source approval and protection.
246-291-120	Design report approval.
246-291-130	Existing system approval.
246-291-140	Water system planning requirements.
246-291-200	Design standards.
246-291-210	Distribution systems.
246-291-220	Disinfection of facilities.
246-291-230	Treatment design and operations.
246-291-240	Reliability.
246-291-250	Continuity of service.
246-291-260	Recordkeeping and reporting.
246-291-270	Cross-connection control.
246-291-300	General monitoring requirements.
246-291-310	General follow-up.
246-291-320	Bacteriological.
246-291-330	Inorganic chemical and physical.
246-291-340	Turbidity.
246-291-350	Other substances.
246-291-360	Public notification.
246-291-370	Severability.

WAC 246-291-001 Purpose and scope. (1) The purpose of these rules is to define basic regulatory requirements to protect the health of consumers using Group B public drinking water supplies. These rules are specifically designed to ensure the provision of high quality drinking water in a reliable manner and in a quantity suitable for intended use.

(2) The rules set forth are adopted under chapter 43.20 RCW and owners of Group B public water systems shall be responsible for ensuring compliance with these rules. Other statutes relating to this chapter are:

(a) RCW 43.20B.020, Fees for services—Department of health and department of social and health services;

(b) Chapter 43.70 RCW, Department of health;

(c) Chapter 70.05 RCW, Local health departments, boards, officers—Regulations;

(d) Chapter 70.116 RCW, Public Water System Coordination Act of 1977; and

(e) Chapter 70.119A RCW, Public water systems—Penalties and compliance.

(3) Prior to expanding a Group B public water system to a Group A public water system, the entire system shall be brought into compliance with chapter 246-290 WAC.

[Statutory Authority: RCW 43.20.050. 94-14-002, § 246-291-001, filed 6/22/94, effective 7/23/94.]

WAC 246-291-010 Definitions. Abbreviations:

CSE - comprehensive system evaluation;

GWI - ground water under the direct influence of surface water;

m - meter;

MCL - maximum contaminant level;

mg/L - milligrams per liter;

ml - milliliter;

mm - millimeter;

NTU - nephelometric turbidity unit;

psi - pounds per square inch;

umhos/cm - micromhos per centimeter;

VOC - volatile organic chemical;

WFI - water facilities inventory form; and

WHPA - wellhead protection area.

"Authorized agent" means any person who:

Makes decisions regarding the operation and management of a public water system whether or not he or she is engaged in the physical operation of the system;

Makes decisions whether to improve, expand, purchase, or sell the system; or

Has discretion over the finances of the system.

"Coliform sample" means a sample of water collected from the distribution system at or after the first service and analyzed for coliform presence in compliance with this chapter.

"Comprehensive system evaluation (CSE)" means a review, inspection and assessment of a public water system, including, but not limited to: Source; facilities; equipment; operation and administration; maintenance; records; planning documents and schedules; and monitoring, for the purpose of ensuring that safe and adequate drinking water is provided.

"Confirmation" means to demonstrate the results of a sample to be precise by analyzing a repeat sample. Confirmation occurs when analysis results fall within plus or minus thirty percent of the original sample.

"Contaminant" means a substance present in drinking water which may adversely affect the health of the consumer or the aesthetic qualities of the water.

"Cross-connection" means a physical arrangement connecting a public water system, directly or indirectly, with anything other than another potable water system, and capable of contaminating the public water system.

"Department" means the Washington state department of health or health officer as identified in a joint plan of operation in accordance with WAC 246-291-030(1).

"Disinfection" means the use of chlorine or other agent or process the department approves for killing or inactivating microbiological organisms, including pathogenic and indicator organisms.

"Distribution system" means that portion of a public water supply system which stores, transmits, pumps, and distributes water to consumers.

"Expanding public water system" means a public water system installing additions, extensions, changes, or alterations to their existing source, transmission, storage, or distribution facilities which will enable the system to increase in size its existing service area and/or its number of approved service connections.

"Fire flow" means the rate of water flow needed to fight fires under WAC 246-293-640 or adopted city, town, or county standards.

"Generator disconnect" means an electrical circuit arranged to allow connection of a generator to the power supply for the pumping equipment while prohibiting electrical current from flowing back into the main service line.

"Ground water under the direct influence of surface water (GWI)" means any water beneath the surface of the

ground, which the department determines has the following characteristics:

Significant occurrence of insects or other macroorganisms, algae, or large-diameter pathogens such as *Giardia lamblia*; or

Significant and relatively rapid shifts in water characteristics such as turbidity, temperature, conductivity, or pH closely correlating to climatological or surface water conditions.

"Group B water system" means a public water system:

Constructed to serve less than fifteen residential services regardless of the number of people; or

Constructed to serve an average nonresidential population of less than twenty-five per day for sixty or more days within a calendar year; or

Any number of people for less than sixty days within a calendar year.

"Guideline" means a department document assisting the owner in meeting a rule requirement.

"Health officer" means the health officer of the city, county, city-county health department or district, or an authorized representative.

"Hydraulic analysis" means the study of the water system network evaluating water flows within the distribution system under worst case conditions such as, peak hourly design flow plus fire flow, when required. Hydraulic analysis includes consideration of all factors affecting system energy losses.

"Maximum contaminant level (MCL)" means the maximum permissible level of a contaminant in water delivered to any public water system user.

"Maximum contaminant level violation" means a confirmed measurement above the MCL and for a duration of time, where applicable.

"Owner" means any agency, subdivision of the state, municipal corporation, firm, company, mutual or cooperative association, institution, partnership, or person or any other entity that holds as property, a public water system.

"Peak hourly design flow" means the maximum rate of water use, excluding fire flow, which can be expected to ever occur within a defined service area over a sixty minute time period.

"Potable" means water suitable for drinking by the public.

"Pressure zone" means a distribution system whereby an established minimum and maximum pressure range can be maintained without the use of ancillary control equipment (e.g., booster pumps, pressure reducing valves, etc.).

"Primary standards" means standards based on chronic, nonacute, or acute human health effects.

"Public water system" means any system, excluding a system serving only one single-family residence and a system with four or fewer connections all of which serve residences on the same farm, providing piped water for human consumption, including collection, treatment, storage, or distribution facilities used primarily in connection with such system.

"Repeat sample" means a sample collected to confirm the results of a previous analysis.

"Same farm" means a parcel of land or series of parcels which are connected by covenants and devoted to the production of livestock or agricultural commodities for commercial purposes and does not qualify as a Group A water system.

"Secondary standards" means standards based on factors other than health effects such as taste and odor.

"Sell" means to bill separately for drinking water or to include drinking water as part of an itemized listing in a bill delivered to customers, where the amount billed is an increase over what the purveyor pays for water. The presence of centralized source or individual service meters does not affect whether the water is being sold.

"Service" means a connection to a public water system designed to provide potable water.

"Special purpose sample" means a sample collected for reasons other than the monitoring compliance specified in this chapter.

"Standard methods" means the 18th edition of the book, titled *Standard Methods for the Examination of Water and Waste Water*, jointly published by the American Public Health Association, American Water Works Association (AWWA), and Water Pollution Control Federation. This book is available through public libraries or may be ordered from AWWA, 6666 West Quincy Avenue, Denver, Colorado 80235.

"State board of health" and **"board"** means the board created by RCW 43.20.030.

"Surface water" means a body of water open to the atmosphere and subject to surface runoff.

"Volatile organic chemical (VOC)" means a manufactured carbon-based chemical that vaporizes quickly at standard pressure and temperature.

"Water facilities inventory form (WFI)" means the department form summarizing each public water system's characteristics.

"Well field" means a group of wells one system owns or controls which:

Draw from the same aquifer or aquifers as determined by comparable inorganic chemical analysis; and

Discharge water through a common pipe and the common pipe shall allow for collection of a single sample before the first distribution system connection.

[Statutory Authority: RCW 43.20.050. 95-20-078, § 246-291-010, filed 10/4/95, effective 11/4/95; 94-14-002, § 246-291-010, filed 6/22/94, effective 7/23/94.]

WAC 246-291-020 Applicability. (1) The rules of this chapter shall apply to all Group B public water systems except those systems meeting all of the following conditions:

(a) Consists only of distribution and/or storage facilities and does not have any source or treatment facilities;

(b) Obtains all water from, but is not owned by, a public water system where the rules of this chapter or chapter 246-290 WAC apply;

(c) Does not sell water directly to any person;

(d) Is not a passenger-conveying carrier in interstate commerce; and

(e) The distribution system is regulated under the Uniform Plumbing Code, chapter 51-26 WAC.

Examples of systems which shall not be exempt include, but are not limited to, water districts, public utility districts, cooperatives, mutuals and associations which serve residential short plats and subdivisions.

(2) Group B public water systems meeting all of the conditions under subsection (1) of this section may be required by the department to comply with such provisions of this chapter as are necessary to resolve a public health concern if the department determines a public health threat exists or is suspected.

[Statutory Authority: RCW 43.20.050. 95-20-078, § 246-291-020, filed 10/4/95, effective 11/4/95; 94-14-002, § 246-291-020, filed 6/22/94, effective 7/23/94.]

WAC 246-291-025 Bottled water. (1) Any water source used for bottling, regardless of size, shall meet the minimum requirements in accordance with chapter 246-290 WAC.

(2) In addition to the requirements imposed by the department, the processing of bottled water is regulated by the state department of agriculture and the United States Food and Drug Administration.

[Statutory Authority: RCW 43.20.050. 95-20-078, § 246-291-025, filed 10/4/95, effective 11/4/95; 94-14-002, § 246-291-025, filed 6/22/94, effective 7/23/94.]

WAC 246-291-030 General administration. (1) The department and the health officer for each local health jurisdiction may develop a joint plan of operation. Responsibility for administering these rules shall remain with the department of health unless there is a joint plan of operation in place. This plan shall:

(a) List the roles and responsibilities and specifically designate those systems for which the department and local health officer have primary responsibility;

(b) Provide a list of water system requirements and procedures which the local board of health may waive for systems within its jurisdiction;

(c) Provide for a level of water system supervision necessary to effectively achieve listed responsibilities;

(d) Be signed by the department and the local health department or district; and

(e) Be reviewed at least once every five years and updated as needed.

Wherever in these rules the term "department" is used, the term "health officer" may be substituted based on the terms of this joint plan of operation.

(2) The local board of health may adopt rules pursuant to RCW 70.05.060 governing public water systems for which the health officer has assumed primary responsibility. Adopted local board of health rules shall be:

(a) No less stringent and may be more stringent than this chapter; and

(b) Revised, if necessary, within twelve months after the effective date of revised state board of health rules. During this time period, existing local rules shall remain in effect, except provisions of the revised state board of health rules which are more stringent than the local board of health rules shall apply.

(3) For residential systems with only two services, the department may eliminate any or all requirements of these rules.

(4) For any residential system, the department may eliminate all ongoing requirements of these rules, except for recordkeeping and reporting requirements under WAC 246-291-260, provided the system has been granted an initial approval or an existing system has been categorized as fully approved/adequate or provisionally approved.

(5) The health officer may approve design reports and water system plans which reflect good engineering practice such as those found in the department guideline titled *Group B Water System Approval*, for those public water systems where the health officer has assumed primary responsibility.

(6) The health officer may allow system owners to substitute results of a calculated fixed radius method and a ten year time of travel criteria instead of using the six hundred foot radius prescribed in WAC 246-291-100 (2)(f) and 246-291-110 (3)(f).

(7) The department may develop and distribute guidelines to clarify sections of the rules as needed.

(8) Fees may be charged by the department of health as authorized in RCW 43.20B.020 and by local health agencies as authorized in RCW 70.05.060 to recover all or a portion of the costs incurred in administering these rules.

[Statutory Authority: RCW 43.20.050. 95-20-078, § 246-291-030, filed 10/4/95, effective 11/4/95; 94-14-002, § 246-291-030, filed 6/22/94, effective 7/23/94.]

WAC 246-291-040 Requirements for engineers. (1) Owners shall ensure that all design reports are prepared by a professional engineer:

(a) Licensed in the state of Washington under chapter 18.43 RCW; and

(b) Having specific expertise regarding design, operation and maintenance of public water systems.

All documents shall bear the engineer's seal and signature.

(2) Until such date as regulations addressing professional engineering requirements for public water systems take effect after adoption by the state board of registration for professional engineers and land surveyors under authority of chapter 18.43 RCW, exceptions to the professional engineer requirement are:

(a) Minor improvements exempted from design report requirements under WAC 246-291-120(1); and

(b) Public water systems serving less than ten service connections consisting of a simple well and pressure tank with one pressure zone and not providing treatment other than simple chlorine disinfection or having special hydraulic considerations, where the local health officer has been delegated authority to:

(i) Approve plans and design reports; or

(ii) Review plans and design reports for completeness prior to forwarding to the department of health for approval.

(3) A "Construction Report For Public Water System Projects" shall be submitted to the department on a department approved form within sixty days of completion and before use of any approved project. The form shall:

(a) Be signed by a professional engineer, or in the case of projects not requiring a professional engineer as outlined in this section, the water system owner;

(b) State that the project is constructed and is completed in accordance with approved design reports; and

(c) State that, in the opinion of the engineer or the water system owner, based on information available, the installation, testing, and disinfection of the system was carried out in

accordance with applicable sections of chapters 246-291 and 246-290 WAC.

(4) It shall be the responsibility of the owner to ensure the requirements of this section are fulfilled before the use of any completed project.

[Statutory Authority: RCW 43.20.050. 94-14-002, § 246-291-040, filed 6/22/94, effective 7/23/94.]

WAC 246-291-050 Enforcement. (1) When a system is out of compliance with these rules, the department may initiate appropriate enforcement actions, regardless of any prior approvals issued by the department, including, but not limited to:

(a) Issuance of a compliance schedule;

(b) Issuance of departmental orders requiring submission of water system plans, design reports, and construction report forms;

(c) Issuance of departmental orders requiring specific actions or ceasing unacceptable activities within a designated time period;

(d) Issuance of departmental orders to stop work and/or refrain from using any public water system or improvements thereto until all written approvals required by statute or rule are obtained;

(e) Imposition of civil penalties as authorized under chapter 70.119A RCW or local authority where applicable; and

(f) Legal action by the attorney general or local prosecutor.

(2) When enforcing the MCLs under this chapter, the department shall enforce compliance with the primary MCLs as its first priority.

[Statutory Authority: RCW 43.20.050. 94-14-002, § 246-291-050, filed 6/22/94, effective 7/23/94.]

WAC 246-291-060 Waivers. (1) The state board of health or the local health officer in those counties having a joint plan of operation, may grant waivers of the requirements of this chapter, provided that procedures used are consistent with WAC 246-290-060 (5)(b) and in the case where a local health officer is authorized to grant the waiver, procedures used shall be approved by the department of health as part of the joint plan of operation.

(2) Consideration by the board or local health officer of requests for waivers shall not be considered adjudicative proceedings as that term is defined in chapter 34.05 RCW.

(3) Statements and written material regarding the request may be presented to the board or local health officer wherein the application will be considered.

(4) The board or local health officer may grant a waiver if it determines the water system is unable to comply with the requirements and granting of the waiver will not result in an unreasonable risk to the health of consumers. No waivers may be granted for exceedance of a primary MCL.

(5) A waiver granted under this section shall lapse two years from the date of issuance unless the water system project has been completed or an extension is granted.

[Statutory Authority: RCW 43.20.050. 94-14-002, § 246-291-060, filed 6/22/94, effective 7/23/94.]

WAC 246-291-100 Ground water source approval and protection. (1) The owner shall ensure that drinking water is obtained from the highest quality source feasible. Existing sources shall conform to the primary water quality standards established in this chapter. Proposed sources shall conform to the primary and secondary water quality standards established in this chapter and the well construction standards established under chapter 173-160 WAC. The owner shall be responsible for submitting evidence required by the department to determine whether a proposed ground water source is a GWI.

(2) No new source, previously unapproved source, or modification of an existing source shall be used as a drinking water supply without department approval. A party seeking approval shall ensure compliance with WAC 246-291-140 as applicable and provide:

(a) A copy of the water right permit, if required, obtained from the department of ecology for the source, quantity, type, and place of use;

(b) A copy of the source site inspection approval made by the department or local health jurisdiction representative;

(c) Well source development data establishing source capacity. Data shall include static water level, yield, amount of drawdown, recovery rate and duration of pumping. The source shall be pump tested to determine whether the well and aquifer are capable of supplying water at the rate desired and to provide information necessary to determine proper pump settings. A department guideline titled *Group B Water System Approval* is available to assist owners;

(d) Upgradient water uses affecting either water quality or quantity;

(e) A map showing the project location and vicinity including a six hundred foot radius around the well site designating the preliminary short term ground water contribution area;

(f) A map depicting topography, distances to well or spring from existing property lines, buildings, potential sources of contamination within the six hundred foot radius around the well, and any other natural or man-made features affecting the quality or quantity of water;

(g) The dimensions and location of sanitary control area;

(h) Copies of the recorded legal documents for the sanitary control area;

(i) A copy of the water well report;

(j) A general description of the spring and/or aquifer recharge area affecting the quantity or quality of flow. Seasonal variation shall also be included;

(k) Documentation of totalizing source meter installation;

(l) An initial analysis result of raw water quality from a certified lab, including as a minimum, a bacteriological, complete inorganic chemical and physical analysis of the source water quality;

(m) In areas where the department determines that other contamination may be present, or at the discretion of the department, sample results for these contaminants may be required;

(n) If water quality information from (l) and (m) of this subsection shows a contaminant level of concern, the department may require further action by the owner; and

(o) If water quality results taken from the proposed source confirm a primary MCL violation, the owner shall ensure that appropriate treatment is provided.

(3) The owner shall contact the department before developing or modifying a source, to identify any additional requirements the department deems necessary.

(4) Sanitary control area.

(a) The owner shall ensure that a sanitary control area is maintained around all sources for the purpose of protecting them from existing and potential sources of contamination. A department guideline titled *Group B Water System Approval* describes activities which should be precluded within the sanitary control area and is available from the department on request.

(b) The minimum sanitary control area shall have a radius of one hundred feet (thirty meters) for wells, and two hundred feet (sixty meters) for springs, unless engineering justification supports a smaller area. The justification must address geological and hydrological data, well construction details and other relevant factors necessary to assure adequate sanitary control.

(c) The department may require a larger sanitary control area if geological and hydrological data support such a decision. It shall be the owner's responsibility to obtain the protection needed.

(d) No source of contamination may be constructed, stored, disposed of, or applied within the sanitary control area without the permission of the department and the system owner.

(e) The sanitary control area shall be owned in fee simple, or the owner shall have the right to exercise complete sanitary control of the land through other legal provisions.

(f) The owner shall obtain a duly recorded restrictive covenant which shall run with the land, restricting the use of said land in accordance with these rules.

[Statutory Authority: RCW 43.20.050. 95-20-078, § 246-291-100, filed 10/4/95, effective 11/4/95; 94-14-002, § 246-291-100, filed 6/22/94, effective 7/23/94.]

WAC 246-291-110 Surface water and GWI source approval and protection. (1) The owner shall ensure that drinking water is obtained from the highest quality source feasible. Existing sources shall conform to the primary water quality standards established in this chapter. Proposed sources shall conform to the primary and secondary water quality standards established in this chapter. The owner shall be responsible for submitting evidence required by the department to determine whether a proposed ground water source is a GWI.

(2) No new source, previously unapproved source, or modification of an existing source shall be used as a drinking water supply without department approval. As of the effective date of these rules, the department shall no longer approve new or expanding surface water or GWI sources unless the department determines they meet the following conditions:

(a) The system is under the ownership and operation of a department of health approved satellite management agency; and

(b) Continuous effective treatment, including filtration, disinfection and any other measures required under chapter 246-290 WAC are provided.

(3) An owner seeking source approval shall provide the department:

(a) A copy of the water right permit, if required, obtained from the department of ecology for the source, quantity, type, and place of use;

(b) A copy of the source site inspection approval made by the department or local health jurisdiction representative;

(c) Upgradient water uses affecting either water quality or quantity;

(d) A map showing the project location and vicinity;

(e) A map depicting topography, distances to the surface water intake or GWI source from existing property lines, buildings, potential sources of contamination, ditches, drainage patterns, and any other natural or man-made features affecting the quality or quantity of water;

(f) For GWI sources:

(i) A map depicting topography, distances to well or spring from existing property lines, buildings, potential sources of contamination within the six hundred foot radius around the well, and any other natural or man-made features affecting the quality or quantity of water;

(ii) Copies of the recorded legal documents for the sanitary control area;

(iii) A copy of the water well report if applicable;

(iv) A general description of the recharge area affecting the quantity or quality of flow. Seasonal variation shall also be included;

(v) Well development data establishing source capacity. Data shall include static water level, yield, amount of drawdown, recovery rate and duration of pumping. The source shall be pump tested to determine whether the well and aquifer are capable of supplying water at the rate desired and to provide information necessary to determine proper pump settings. A department guideline titled *Group B Water System Approval* is available to assist owners.

Existing and proposed sources shall conform to the well construction standards established under chapter 173-160 WAC if applicable.

(g) Documentation of totalizing source meter installation;

(h) An initial analysis result of raw water quality from a certified lab, including as a minimum, a bacteriological, and complete inorganic chemical and physical analysis of the source water quality;

(i) In areas where the department determines that other contamination may be present, or at the discretion of the department, sample results for these contaminants may also be required;

(j) If water quality information from (h) and (i) of this subsection shows a contaminant level of concern, the department may require further action by the owner; and

(k) If water quality results taken from the proposed source confirm a primary MCL violation, the owner shall ensure that appropriate treatment is provided which shall eliminate the public health risk to consumers served by the system.

(4) Watershed control program.

(a) Owners of new or expanding surface water or GWI sources shall ensure the development and submittal of a watershed control program to the department for review and approval. Once approved, the owner shall implement the program.

(b) This program shall be part of the water system plan required in WAC 246-291-140.

(c) The owner's watershed control program shall contain, at a minimum, the following elements:

(i) Watershed description and inventory, including location, hydrology, land ownership and activities which may adversely affect water quality;

(ii) Watershed control measures, including documentation of ownership and relevant written agreements, monitoring procedures and water quality;

(iii) System operation, including emergency provisions; and

(iv) Documentation of water quality trends.

Sections in the department guideline titled *Planning Handbook* and in the *DOH SWTR Guidance Manual* address watershed control and are available to owners.

(d) The owner shall ensure submittal of the watershed control program to the department for review and approval. Following department approval, the owner shall ensure implementation as approved.

(e) The owner shall update the watershed control program at least every six years, or more frequently if required by the department.

[Statutory Authority: RCW 43.20.050. 95-20-078, § 246-291-110, filed 10/4/95, effective 11/4/95; 94-14-002, § 246-291-110, filed 6/22/94, effective 7/23/94.]

WAC 246-291-120 Design report approval. (1) Design reports shall be submitted to the department for written approval prior to installation of any new water system, or water system extension or improvement with the following exceptions:

(a) Installation of valves, fittings, and meters;

(b) Repair of a system component or replacement with a similar component of the same capacity; and

(c) Maintenance or painting of surfaces not contacting potable water.

(2) Design reports submitted for approval by owners of systems required to have a water system plan, will not be considered for approval unless there is a current approved water system plan and the plan adequately addresses the project.

(3) Design reports shall include, at a minimum, the following:

(a) Alternatives. Verify contacts with other water system owners as applicable in accordance with WAC 246-291-140(2);

(b) Legal considerations. Identify legal aspects such as ownership, right of way, sanitary control area, and restrictive covenants;

(c) Engineering calculations. Describe how the project complies with the design considerations;

(d) Drawings. Include detailed drawings of each project component;

(e) Material specifications. List detailed material specifications for each project component;

(f) Construction specifications. List detailed construction specifications and assembly techniques for carrying out the project;

(g) Testing. Identify testing criteria and procedures for each applicable portion of the project;

(h) Disinfection. Identify specific disinfection procedures which must conform with American Water Works Association standards or other standards acceptable by the department;

(i) Inspection. Identify provisions for inspection of the installation of each project component. See WAC 246-291-040 for construction reporting requirements; and

(j) Change orders. All changes except for minor field revisions must be submitted to and approved by the department in writing.

(4) Approval of design reports shall be in effect for two years unless the department determines a need to withdraw the approval. An extension of the approval may be obtained by submitting a status report and a written schedule for completion. Extensions may be subject to additional terms and conditions imposed by the department.

[Statutory Authority: RCW 43.20.050. 94-14-002, § 246-291-120, filed 6/22/94, effective 7/23/94.]

WAC 246-291-130 Existing system approval. (1) At the discretion of the department, owners of existing systems without approved design reports shall, as determined by the department, provide information necessary to establish the extent of the water systems compliance with this chapter.

(2) After receipt of the required data, the department shall review the information and place the system into one of the following categories:

(a) Fully approved/adequate. A fully approved system has been found to be in full compliance with these regulations and may add services if designed accordingly; or

(b) Provisionally adequate. A provisionally adequate system complies with applicable MCL and treatment standards, fire flow requirements where applicable, and meets a twenty psi minimum pressure requirement under peak hourly design flow conditions but may not be in compliance with other regulatory requirements. A provisionally adequate system is considered satisfactory for its existing services, but may not expand to supply additional services; or

(c) Inadequate. Any system not identified in (a) or (b) of this subsection. The system is considered unsatisfactory and no additional service connections can be made to an inadequate system.

(3) After categorizing the system, the department shall notify the owner in writing of the following:

(a) The system's category;

(b) The relationship of the system's category with respect to adding service connections and potential comments on status request letters; and

(c) If the system is not fully approved, what additional actions the owner needs to complete before a full or provisional approval is granted.

(4) The department is authorized to take enforcement actions in accordance with WAC 246-291-050.

[Statutory Authority: RCW 43.20.050. 95-20-078, § 246-291-130, filed 10/4/95, effective 11/4/95; 94-14-002, § 246-291-130, filed 6/22/94, effective 7/23/94.]

WAC 246-291-140 Water system planning requirements. (1) Water system plan.

(a) The water system plan shall:

(i) Identify present and future needs;

(ii) Set forth means for meeting those needs; and

(iii) Do so in a manner consistent with other relevant plans and local, state, and federal laws.

(b) Owners of the following categories of systems shall ensure the development and submittal of a water system plan for review and approval by the department:

(i) All systems as required by chapter 70.116 RCW the Public Water System Coordination Act of 1977 and chapter 246-293 WAC;

(ii) Any system experiencing problems related to planning, operation, and/or management as determined by the department and outlined in a departmental order;

(iii) Any proposed or expanding system as determined by the department; and

(iv) Any system which installs treatment, other than simple chlorination disinfection equipment, after the effective date of these regulations.

(c) A department guideline titled *Group B Water System Approval* is available from the department to assist owners in developing this plan. Design reports may be combined with a water system plan. To the extent to which they are applicable, the water system plan shall address the following elements:

(i) Description of system management and ownership;

(ii) Description of appropriate water quality monitoring and reporting requirements;

(iii) Service area and identification of existing and proposed major facilities;

(iv) Maximum number of connections the system can safely and reliably support;

(v) Water conservation program. Systems which are developed or expanded after the effective date of this rule shall develop a conservation program;

(vi) Relationship and compatibility with other plans;

(vii) Description of water source(s) including compliance with applicable source approval and protection under WAC 246-291-100 and 246-291-110;

(viii) Source protection (including required protective covenants, wellhead protection and watershed control where applicable); and

(ix) Financial viability.

(2) Prior to developing a new water system, the developer of the proposed system shall follow the steps listed below as applicable:

(a) The developer shall ensure that the new system is owned or operated by a department-approved satellite management agency (SMA), or if a department-approved SMA is not available, that the proposed new system has a department-approved water system plan in accordance with WAC 246-291-140;

(b) Department approval of any system created after July 22, 1995, that is not owned or operated by a SMA shall be conditioned upon future management or ownership by a SMA, if such management or ownership can be made with reasonable economy and efficiency, or upon periodic review of the system's operational history to determine its ability to meet the department's financial viability and other operating requirements.

(c) If the proposed system is located within the boundaries of a critical water supply service area, the ability to develop an independent system shall be governed by the provisions of the Public Water System Coordination Act, chapter 70.116 RCW and chapter 246-293 WAC, and will be subject to the jurisdictional coordinated water system plan; or

(d) If the proposed system consists of a surface water or GWI source, ensure that the proposed system will be owned and operated by a department-approved satellite system management agency.

(3) For systems approved after the effective date of these rules, a summary of the following shall be recorded, by the system owner, on all affected property titles as a means of providing information about the system to property owners, lending institutions, and other potentially affected parties:

(a) Notice that the property is served by a public water system;

(b) The initial water system plan, planning section of the *Group B Water System Guideline*, or equivalent information from other documents as determined by the department;

(c) Notice that the system is subject to state and local rules;

(d) Recommendation to check with the jurisdictional regulatory authority on the current system status;

(e) Notice that fees may be assessed by the department for providing information on a public water system;

(f) Requirement for satellite management, if applicable;

(g) Notice of any waivers granted to the system; and

(h) Other information required by the department.

[Statutory Authority: RCW 43.20.050. 95-20-078, § 246-291-140, filed 10/4/95, effective 11/4/95; 94-14-002, § 246-291-140, filed 6/22/94, effective 7/23/94.]

WAC 246-291-200 Design standards. (1) Water system owners shall ensure that good engineering practices are used in the design of all public water systems. Information on what is good engineering practice is available from the department in the guideline titled *Group B Water System Approval*.

(2) In addition, owners of new or expanding public water systems shall ensure the following factors are addressed:

(a) Local conditions, plans and/or regulations;

(b) Public Water System Coordination Act considerations where appropriate; and

(c) Other requirements as determined by the department.

(3) Any pipe, pipe fittings, solder, or flux used in the installation or repair of a public water system shall be lead-free. Within the context of this section, lead-free shall mean having no more than eight percent lead in pipes and pipe fittings, and no more than two-tenths of one percent lead in solder and flux. This prohibition shall not apply to leaded joints necessary for the repair of cast iron pipes.

[Statutory Authority: RCW 43.20.050. 94-14-002, § 246-291-200, filed 6/22/94, effective 7/23/94.]

WAC 246-291-210 Distribution systems. (1) All distribution reservoirs shall have suitable watertight roofs or covers preventing entry by birds, animals, insects, and dust and shall include appropriate provisions to safeguard against trespass, vandalism, and sabotage. All new distribution reservoirs shall be able to be drained by gravity to daylight.

(2) The owner shall ensure that the distribution system is sized and evaluated using a hydraulic analysis acceptable to the department.

(3) Systems designed to provide fire hydrants shall have a minimum distribution main size of six inches (150 mm).

(4) New water systems or additions to existing systems shall provide a design quantity of water at a positive pressure of at least thirty psi throughout the system under peak hourly design flow conditions measured at any customer's water meter or at the property line if no meter exists.

(5) If fire flow is to be provided, the distribution system shall be designed to provide the required fire flow at a pressure of at least twenty psi throughout the system during peak hourly design flow conditions.

(6) Booster pumps needed for individual services shall be subject to review and approval by the department. Installation shall be made under the supervision of the owner to ensure cross-connection control requirements are met. Installation of booster pumps which are an integral part of the system design shall be inspected and certified by the engineer.

[Statutory Authority: RCW 43.20.050. 94-14-002, § 246-291-210, filed 6/22/94, effective 7/23/94.]

WAC 246-291-220 Disinfection of facilities. No portion of a public water system containing potable water shall be put into service, nor, if service has been terminated, shall service resume, until the facility has been effectively disinfected. The procedure used for disinfection shall conform to the American Water Works Association standards or other standards acceptable to the department. In cases of new construction, drinking water shall not be furnished to the consumer until satisfactory bacteriological samples have been analyzed by a laboratory certified by the state.

[Statutory Authority: RCW 43.20.050. 94-14-002, § 246-291-220, filed 6/22/94, effective 7/23/94.]

WAC 246-291-230 Treatment design and operations. (1) Finished water quality from existing and proposed sources of supply shall conform to the minimum water quality standards established in this chapter.

(2) Predesign studies shall be required for proposed surface water and GWI treatment and may be required for ground water treatment. The goal of the predesign study shall be to establish the most acceptable method to produce satisfactory finished water quality.

(3) Treatment of ground water sources shall be as determined by the department.

(4) The minimum level of treatment for new or expanding surface water and GWI sources approved after the effective date of these regulations shall be coagulation, flocculation, filtration, and disinfection unless otherwise approved by the department.

(5) The minimum level of treatment for existing nonexpanding surface water and GWI sources approved prior to the effective date of these regulations shall be filtration and disinfection.

(6) Disinfection methods, other than chlorination, i.e., ozonation or ultraviolet radiation, may be approved by the department with appropriate engineering justification.

(7) The owner shall ensure that the system is operated in accordance with good operations procedures such as those listed in the department guideline titled *Group B Water System Approval*.

(8) The owner shall ensure that no bypass is established or maintained to divert water around any feature of a treatment process, except by written approval from the department.

[Statutory Authority: RCW 43.20.050. 94-14-002, § 246-291-230, filed 6/22/94, effective 7/23/94.]

WAC 246-291-240 Reliability. (1) All public water systems shall provide an adequate quantity and quality of water in a reliable manner.

(a) In determining whether a proposed public water system or an expansion or modification of an existing system is capable of providing an adequate quantity of water, the department shall consider the immediate as well as the reasonably anticipated future needs of the system's consumers.

(b) In determining whether an existing public water system is providing an adequate quantity of water, the department shall consider the needs of the system's existing consumers exclusively, unless, in the department's discretion, consideration of the needs of potential consumers is in the public interest.

(2) The owner shall ensure the system is constructed, operated, and maintained to protect against failures. New and expanding systems shall be equipped with a generator disconnect. Security measures shall be employed to assure the water source, water treatment processes, water storage facilities, and the distribution system are under the strict control of the owner.

(3) Where fire flow is required, a positive pressure shall be maintained throughout the system under fire flow conditions.

(4) Water pressure at the customer's service meter or property line if a meter is not used, shall be maintained at the approved design pressure under peak hourly design flow conditions.

(5) No intake or other connection shall be maintained between a public water system and a source of water not approved by the department.

(6) Owners shall provide the department with the current names, addresses, and telephone numbers of the owners, operators, and emergency contact persons for the system, including any changes to this information. The owner shall ensure that customer concerns and service complaints are responded to in a timely manner.

[Statutory Authority: RCW 43.20.050. 94-14-002, § 246-291-240, filed 6/22/94, effective 7/23/94.]

WAC 246-291-250 Continuity of service. (1) No owner shall transfer system ownership without providing written notice to the department and all customers. Notification shall include a time schedule for transferring responsibilities, identification of the new owner, and under what authority the new ownership will operate. If the system is a corporation, identification of the registered agent shall also be provided.

(2) The system transferring ownership shall ensure all health-related standards are met during transfer and shall inform and train the new owner regarding operation of the system.

(3) No owner shall end utility operations without providing written notice to all customers and the department at least one year prior to termination of service.

(4) Nothing in these rules shall prohibit an owner from terminating service to a specific customer if the customer fails to pay normal fees for service in a timely manner or if the customer allows or installs an unauthorized service connection to the system.

(5) Where this section may be in conflict with existing state statutes, the more stringent statute shall prevail.

[Statutory Authority: RCW 43.20.050. 94-14-002, § 246-291-250, filed 6/22/94, effective 7/23/94.]

WAC 246-291-260 Recordkeeping and reporting. (1) The owner shall ensure that the following records of operation and water quality analyses are kept on file:

(a) Records of bacteriological and turbidity analyses shall be kept for five years. Records of chemical analyses shall be kept for as long as the system is in operation. Other records of operation and analyses required by the department shall be kept for three years. All records shall bear the signature of the owner of the water system or his or her representative.

(b) Records of action taken by the system to correct violations of primary drinking water regulations and copies of public notifications shall be kept for three years after the last action taken with respect to the particular violation involved.

(c) Copies of any written reports, summaries, or communications, relating to comprehensive system evaluations (CSEs) conducted by system personnel, by a consultant or by any local, state, or federal agency, shall be kept for ten years after completion of the CSE involved.

(d) Where applicable, records of operation and analyses shall include the following:

(i) Daily chlorine residual;

(ii) Water treatment plant performance including, but not limited to:

(A) Type of chemicals used and quantity;

(B) Amount of water treated; and

(C) Results of analyses.

(iii) Daily turbidity;

(iv) Monthly water use readings from totalizing source meters; and

(v) Other information as specified by the department.

(2) Reporting.

(a) The owner shall ensure that reports required by this chapter, are submitted to the department when requested by the department or as otherwise required by this section, including tests, measurements, and analytic reports.

(b) Water facilities inventory and report form (WFI).

(i) Owners shall ensure the submittal of an updated WFI to the department every three years or as requested; and

(ii) The owner shall also ensure the submittal of an updated WFI to the department within thirty days of any change in name, number of connections, ownership, or responsibility for management of the water system.

(c) Bacteriological.

(i) The owner shall ensure that the department is notified of the presence of:

(A) Coliform in a sample, within ten days of notification by the laboratory; and

(B) Fecal coliform or E. coli in a sample, by the end of the business day in which the owner is notified by the laboratory or as soon as possible.

(ii) When a coliform MCL violation occurs, the owner shall ensure that the following notifications are made:

(A) Notification of the department before the end of the next business day when a coliform MCL is determined; and

(B) Notification of the water system users in accordance with WAC 246-291-360.

(d) Water use data shall be reported upon request of the department.

[Statutory Authority: RCW 43.20.050. 94-14-002, § 246-291-260, filed 6/22/94, effective 7/23/94.]

WAC 246-291-270 Cross-connection control. (1) Owners have the responsibility to protect public water systems from contamination due to cross-connections.

(2) Cross-connections which can be eliminated shall be eliminated. The owner shall work cooperatively with local authorities to eliminate or control potential cross-connections in a manner acceptable to the department.

(3) When an existing cross-connection poses a potential health or system hazard, the owner shall shut off water service to the premises until the cross-connection has been eliminated or controlled by the installation of a proper backflow prevention assembly.

(4) Backflow prevention devices shall be approved by the department and tested in a manner prescribed by the department in WAC 246-290-490.

[Statutory Authority: RCW 43.20.050. 94-14-002, § 246-291-270, filed 6/22/94, effective 7/23/94.]

WAC 246-291-300 General monitoring requirements. (1) The department may require additional monitoring when it determines contamination is present or suspected in the water system or when it determines the source may be vulnerable to contamination.

(2) Special purpose samples shall not count toward fulfillment of the monitoring requirements of this chapter.

(3) The owner shall ensure samples required by this chapter are collected, transported, and submitted for analysis according to department-approved methods. The analyses shall be performed by the state public health laboratory or another laboratory certified by the department. Qualified water utility, certified laboratory, or department personnel may conduct measurements for pH, temperature, residual disinfectant concentration and turbidity as required by this chapter, provided, these measurements are made in accordance with *Standard Methods*.

(4) When one Group B water system sells water to another public water system and the cumulative number of services or population served meet the definition of a Group A system, the owner of the selling system shall ensure that source monitoring is conducted in accordance with the minimum requirements for Group A community systems found in chapter 246-290 WAC.

[Statutory Authority: RCW 43.20.050. 94-14-002, § 246-291-300, filed 6/22/94, effective 7/23/94.]

WAC 246-291-310 General follow-up. (1) If a water quality sample exceeds any MCLs listed in this chapter, the owner shall ensure notification of the department and take follow-up action as described in this chapter.

(2) When a primary MCL violation occurs, the owner shall ensure that the following actions are taken:

(a) Notification of the department in accordance with WAC 246-291-260;

(b) Notification of the consumers served by the system in accordance with WAC 246-291-360;

(c) Determination of the cause of the contamination; and

(d) Other action as directed by the department.

(3) When a secondary MCL violation occurs, the owner shall ensure that the department is notified and that action is taken as directed by the department.

(4) The department shall determine the follow-up action when a substance not included in this chapter is detected.

[Statutory Authority: RCW 43.20.050. 94-14-002, § 246-291-310, filed 6/22/94, effective 7/23/94.]

WAC 246-291-320 Bacteriological. (1) Owners shall ensure the collection and submittal of a sample for coliform analysis at least once every twelve months from the furthest end of the distribution system or as directed by the department.

(2) When coliform bacteria are present in any sample the owner shall ensure that:

(a) The sample is analyzed for fecal coliform or E. coli;

(b) The department is notified in accordance with WAC 246-291-260; and

(c) Further action is taken as directed by the department.

(3) MCLs.

(a) MCLs under this subsection shall be considered primary standards.

(b) An MCL violation for coliform bacteria occurs when a routine and repeat sample have coliform presence.

(c) In determining MCL compliance, the owner shall:

(i) Include:

(A) Routine samples; and

(B) Repeat samples.

(ii) Not include:

(A) Invalidated samples; and

(B) Special purpose samples.

[Statutory Authority: RCW 43.20.050. 94-14-002, § 246-291-320, filed 6/22/94, effective 7/23/94.]

WAC 246-291-330 Inorganic chemical and physical. (1) Monitoring.

(a) A complete inorganic chemical and physical analysis shall consist of the primary and secondary chemical and physical standards.

(i) Primary chemical and physical standards are antimony, arsenic, barium, beryllium, cadmium, chromium, cyanide, fluoride, mercury, nickel, nitrate (as N), nitrite (as N), selenium, sodium, thallium, and turbidity.

(ii) Secondary chemical and physical standards are chloride, color, hardness, iron, manganese, silver, specific conductivity, sulfate*, total dissolved solids*, and zinc.

*Required only when specific conductivity exceeds seven hundred micromhos/centimeter.

(b) Samples taken for inorganic chemical analyses shall be collected at the source before treatment.

(c) Owners shall ensure submittal of at least one initial complete analysis from each source or well field;

(d) After the initial complete analysis, owners shall ensure submittal to the department of results of at least one nitrate sample analyzed from each source or well field every thirty-six months; and

(e) When treatment is provided for one or more inorganic chemical or physical contaminants, samples shall be taken for the specific contaminant or contaminants before and after treatment. The department shall determine the frequency of sampling.

(2) Follow-up. When an initial analysis of a substance exceeds the MCL, the owner shall ensure that at least one additional sample is immediately taken from the same sampling point and analyzed for any substance which exceeded the MCL. If the average of the samples exceeds the MCL, a violation is confirmed.

(3) MCLs. The primary and secondary MCLs are listed in Tables 1 and 2

Table 1
INORGANIC CHEMICAL CHARACTERISTICS

Substance	Primary MCLs (mg/L)
Antimony	0.006
Arsenic	0.05
Barium	2.0
Beryllium	0.004
Cadmium	0.005
Chromium	0.1
Cyanide	0.2
Fluoride	4.0
Mercury	0.002
Nickel	0.1
Nitrate (as N)	10.0
Nitrite (as N)	1.0
Selenium (Se)	0.05
Sodium (Na)	*
Thallium	0.002
Substance	**Secondary MCLs (mg/L)**
Chloride (Cl)	250.0
Fluoride (F)	2.0
Iron (Fe)	0.3
Manganese (Mn)	0.05
Silver (Ag)	0.1
Sulfate (SO_4)	250.0
Zinc (Zn)	5.0

Note: Although the state board of health has not established an MCL for sodium, there is enough public health significance connected with sodium levels to require inclusion in inorganic chemical and physical monitoring.

Table 2
PHYSICAL CHARACTERISTICS

Substance	Primary MCL
Turbidity	1-0 NTU
Substance	**Secondary MCLs**
Color	15 Color Units
Hardness	None established

Specific Conductivity	700 umhos/cm
Total Dissolved Solids (TDS)	500 mg/L

[Statutory Authority: RCW 43.20.050. 94-14-002, § 246-291-330, filed 6/22/94, effective 7/23/94.]

WAC 246-291-340 Turbidity. (1) The department shall determine monitoring requirements on a case-by-case basis. New surface water and GWI sources shall comply with applicable turbidity monitoring requirements in accordance with Part 6 of chapter 246-290 WAC.

(2) MCLs.

(a) The department shall consider standards under this subsection primary standards.

(b) The MCLs for turbidity are:

(i) 1.0 NTU, based on a monthly average of the maximum daily turbidity, where the maximum daily turbidity is defined as the average of the:

(A) Highest two hourly readings over a twenty-four-hour period when continuous monitoring is used; or

(B) Daily grab samples taken within one hour when daily monitoring is used.

The department may increase the MCL to 5.0 NTUs if the owner can show the source is within a controlled watershed and the source meets the requirements under WAC 246-291-110.

(ii) 5.0 NTUs based on an average of the maximum daily turbidity for two consecutive days.

[Statutory Authority: RCW 43.20.050. 94-14-002, § 246-291-340, filed 6/22/94, effective 7/23/94.]

WAC 246-291-350 Other substances. (1) In areas known or suspected of being contaminated with other substances of public health concern, the department may require that an owner submit water samples to test for the suspected contamination at a frequency determined by the department.

(2) The department may require repeat samples for confirmation of results.

(3) Any substance confirmed in a water system that does not have an MCL listed in this chapter shall be subject to the MCLs, state advisory levels (SALs) and other provisions found in chapter 246-290 WAC.

[Statutory Authority: RCW 43.20.050. 94-14-002, § 246-291-350, filed 6/22/94, effective 7/23/94.]

WAC 246-291-360 Public notification. (1) Responsibility. Within fourteen days of the violation, the owner shall ensure that water system users are notified when the system has a violation of a primary MCL.

(2) Content. Notices shall provide:

(a) A clear, concise, and simple explanation of the violation;

(b) Discussion of potential adverse health effects and any segments of the population that may be at higher risk;

(c) A list of steps the owner has taken or is planning to take to remedy the situation;

(d) A list of steps the consumer should take, including advice on seeking an alternative water supply if necessary;

(e) The owner's and manager's names and phone numbers; and

(f) When appropriate, notices shall be multilingual.

The owner may provide additional information to further explain the situation.

(3) Distribution. Owners shall ensure that a written notice is distributed to all water system users within fourteen days of a violation unless otherwise directed by the department.

(4) When circumstances dictate the owner give a broader or more immediate notice to protect public health, the department may require notification by whatever means necessary.

(5) When a system is granted a waiver for reduction of water quality standards, the owner shall ensure that customers are notified. The owner shall provide a notice annually and send a copy to the department.

[Statutory Authority: RCW 43.20.050. 94-14-002, § 246-291-360, filed 6/22/94, effective 7/23/94.]

WAC 246-291-370 Severability. If any provision of this chapter or its application to any person or circumstances is held invalid, the remainder of this chapter, or the application of the provision to other persons or circumstances, shall not be affected.

[Statutory Authority: RCW 43.20.050. 94-14-002, § 246-291-370, filed 6/22/94, effective 7/23/94.]

Chapter 246-292 WAC
WATER WORKS OPERATOR CERTIFICATION

WAC

246-292-001	Purpose.
246-292-010	Definitions.
246-292-020	General system requirements.
246-292-031	Certified operator duties.
246-292-040	Classification of public water systems.
246-292-050	Minimum certification requirements for public water systems.
246-292-055	Minimum requirements for contract operators.
246-292-060	Minimum education and experience requirements for water works operators.
246-292-070	Application and examination.
246-292-075	Reciprocity.
246-292-080	System temporary operator certification.
246-292-085	Grandparenting.
246-292-090	Renewal of certificates.
246-292-100	Revocation and suspension.
246-292-110	Enforcement.
246-292-160	Water works certification fees.

DISPOSITION OF SECTIONS FORMERLY CODIFIED IN THIS CHAPTER

246-292-030	Certification board. [Statutory Authority: Chapter 70.119 RCW. 94-04-004, § 246-292-030, filed 1/20/94, effective 2/20/94. Statutory Authority: RCW 43.70.-040. 91-02-049 (Order 121), recodified as § 246-292-030, filed 12/27/90, effective 1/31/91. Statutory Authority: RCW 70.119.050. 78-10-053 (Order 1343), § 248-55-040, filed 9/22/78.] Repealed by 96-19-041, filed 9/12/96, effective 10/13/96. Statutory Authority: RCW 43.70.040.
246-292-120	Purpose. [Statutory Authority: RCW 43.70.040. 91-02-049 (Order 121), recodified as § 246-292-120, filed 12/27/90, effective 1/31/91. Statutory Authority: RCW 70.119.050. 82-24-070 (Order 1917), § 248-55-210, filed 12/1/82.] Repealed by 94-04-004, filed 1/20/94, effective 2/20/94. Statutory Authority: Chapter 70.119 RCW.
246-292-130	Notice of decision—Adjudicative proceeding. [Statutory Authority: RCW 43.70.040. 91-02-049 (Order 121), recodified as § 246-292-130, filed 12/27/90, effective 1/31/91. Statutory Authority: Chapter 34.05 RCW, RCW 34.05.220 (1)(a) and 70.119.050. 90-06-019 (Order 039), § 248-55-220, filed 2/28/90, effective

3/1/90. Statutory Authority: RCW 70.119.050. 82-24-070 (Order 1917), § 248-55-220, filed 12/1/82.] Repealed by 94-04-004, filed 1/20/94, effective 2/20/94. Statutory Authority: Chapter 70.119 RCW.

246-292-140 Certificate denial—Adjudicative procedure. [Statutory Authority: RCW 43.70.040. 91-02-049 (Order 121), recodified as § 246-292-140, filed 12/27/90, effective 1/31/91. Statutory Authority: Chapter 34.05 RCW, RCW 34.05.220 (1)(a) and 70.119.050. 90-06-019 (Order 039), § 248-55-235, filed 2/28/90, effective 3/1/90.] Repealed by 94-04-004, filed 1/20/94, effective 2/20/94. Statutory Authority: Chapter 70.119 RCW.

246-292-150 Certificate suspension, modification, or revocation—Adjudicative procedure. [Statutory Authority: RCW 43.70.040. 91-02-049 (Order 121), recodified as § 246-292-150, filed 12/27/90, effective 1/31/91. Statutory Authority: Chapter 34.05 RCW, RCW 34.05.220 (1)(a) and 70.119.050. 90-06-019 (Order 039), § 248-55-240, filed 2/28/90, effective 3/1/90. Statutory Authority: RCW 70.119.050. 82-24-070 (Order 1917), § 248-55-240, filed 12/1/82.] Repealed by 94-04-004, filed 1/20/94, effective 2/20/94. Statutory Authority: Chapter 70.119 RCW.

246-292-170 Severability. [Statutory Authority: Chapter 70.119 RCW. 94-04-004, § 246-292-170, filed 1/20/94, effective 2/20/94.] Repealed by 01-02-070, filed 12/29/00, effective 1/29/01. Statutory Authority: Chapter 70.119 RCW and Safe Drinking Water Act, Public Law 104-182; 64 F.R. 5916 - 5921.

246-292-990 Waterworks operator certification fees. [Statutory Authority: RCW 43.70.040. 91-02-049 (Order 121), recodified as § 246-292-990, filed 12/27/90, effective 1/31/91. Statutory Authority: 1982 c 201. 82-13-011 (Order 1825), § 440-44-080, filed 6/4/82.] Repealed by 94-04-004, filed 1/20/94, effective 2/20/94. Statutory Authority: Chapter 70.119 RCW.

WAC 246-292-001 Purpose. Pursuant to the provisions of chapter 70.119 RCW, the purpose of this chapter is to protect public health by setting minimum requirements and standards for public water system operation and certification of operators in responsible charge of public water systems. Certification under this chapter is available to all operators who can meet the minimum qualifications of a given classification.

[Statutory Authority: Chapter 70.119 RCW and Safe Drinking Water Act, Public Law 104-182; 64 F.R. 5916 - 5921. 01-02-070, § 246-292-001, filed 12/29/00, effective 1/29/01. Statutory Authority: Chapter 70.119 RCW. 94-04-004, § 246-292-001, filed 1/20/94, effective 2/20/94. Statutory Authority: RCW 43.70.040. 91-02-049 (Order 121), recodified as § 246-292-001, filed 12/27/90, effective 1/31/91. Statutory Authority: RCW 70.119.050. 78-10-053 (Order 1343), § 248-55-010, filed 9/22/78.]

WAC 246-292-010 Definitions. Abbreviations and acronyms:

BAT - backflow assembly tester;

BTO - basic treatment operator;

CCS - cross connection control specialist;

GWI - ground water under the direct influence of surface water;

NTNC - nontransient noncommunity;

OIT - operator-in-training;

SMA - satellite management agency;

TNC - transient noncommunity;

WAC - Washington Administrative Code;

WDM - water distribution manager;

WDS - water distribution specialist;

WTPO - water treatment plant operator;

"Available" means based on system size, complexity, and source water quality, a certified operator must be on-site or able to be contacted as needed to initiate the appropriate action in a timely manner.

"Certificate" means a certificate of competency issued by the department stating that the operator has met the requirements for the specified operator classification of the certification program.

"Certified operator" means a person who has met the applicable requirements of this chapter and holds a valid certificate.

"Complex filtration technology" means conventional, direct, in-line or diatomaceous earth filtration.

"Community water system" means any Group A water system providing service to fifteen or more service connections used by year-round residents for one hundred eighty or more days within a calendar year, regardless of the number of people, or regularly serving twenty-five year-round (i.e., more than one hundred eighty days per year) residents. Examples of a community water system might include a municipality, subdivision, mobile home park, apartment complex, college with dormitories, nursing home, or prison.

"Continuing education unit (CEU)" means a nationally recognized unit of measurement similar to college credits. One CEU is awarded for every ten contact hours of participation in an organized continuing education experience under responsible sponsorship, capable direction and qualified instruction. Forty-five relevant CEUs equals forty-five relevant college quarter credits or thirty relevant college semester credits as determined by the department.

"Contract operator" means a person in charge of the daily operational activities of three or more public water systems.

"Cross connection control program" means the administrative and technical procedures the owner implements to protect the public water system from contamination via cross-connections as required in WAC 246-290-490.

"Department" means the Washington state department of health, through the secretary of health or the secretary's designee.

"Distribution system" means all piping components of a public water system that serves to convey water from transmission mains linked to source, storage and treatment facilities to the consumer excluding individual services.

"Grandparenting" means the exemption for the existing operator in responsible charge from meeting the initial education, experience and examination requirements for the class of certification the system has been assigned.

"Gross negligence" means an act or omission performed or not performed in reckless disregard of a legal duty, or without even slight care. In considering whether an act or omission constitutes gross negligence, the department shall consider all relevant factors including, but not limited to:

(1) The standard of care commonly exercised by operators;

(2) Whether the legal duty was known or should have been known to the alleged violator; and

(3) The degree to which the alleged violation endangered public health.

"Ground water under the direct influence of surface water (GWI)" means any water beneath the surface of the ground with:

Significant occurrence of insects or other macroorganisms, algae, or large-diameter pathogens such as Giardia lamblia; or

Significant and relatively rapid shifts in water characteristics such as turbidity, temperature, conductivity, or pH closely correlating to climatological or surface water condition.

"Group A water system" means a public water system providing service such that it meets the definition of a public water system provided in the 1996 amendments to the federal Safe Drinking Water Act (Public Law 104-182, Section 101, subsection b). Group A water systems are further defined as community and noncommunity water systems (see other definitions).

"Group B water system" means a public water system with less than fifteen residential connections and serving:

An average of less than twenty-five people per day for sixty or more days within a calendar year; or

Any number of people for less than sixty days within a calendar year.

"Nationally recognized association of certification authorities" means an organization that:

• Serves as an information center for certification activities;

• Recommends minimum standards and guidelines for classification of potable water treatment plants, water distribution systems, wastewater facilities and certification of operators;

• Facilitates reciprocity between state programs; and

• Assists authorities in establishing new and updating existing certification programs.

"Noncommunity water system" means a Group A water system that is not a community water system. Noncommunity water systems are further defined as nontransient noncommunity (NTNC) and transient noncommunity (TNC).

"Nontransient noncommunity water system (NTNC)" means a Group A water system that provides service to twenty-five or more of the same nonresidential people for one hundred eighty or more days within a calendar year. Examples of a NTNC water system include a school or day care center, or a business, factory, motel or restaurant with twenty-five or more employees on-site.

"Owner" means any agency, subdivision of the state, municipal corporation, firm, company, mutual or cooperative association, institution, partnership, or person or any other entity that holds as property, a public water system.

"Operating experience" means the routine on-site performance of duties in a water purification plant or distribution system. Those duties affect plant or system performance and/or water quality.

"Operating shift" means that period of time during which operator decisions are made and actions are taken that will directly impact water quality and/or quantity of drinking water.

"Professional growth reporting period" means a designated time period of not less than three years, in which a certified operator shall demonstrate professional growth.

"Public water system" means any system providing water for human consumption through pipes or other constructed conveyances, excluding a system serving only one single-family residence and a system with four or fewer connections all of which serve residences on the same farm. The term includes:

• Collection, treatment, storage, and/or distribution facilities under control of the owner and used primarily in connection with such systems; and

• Collection or pretreatment storage facilities not under control of the owner, but primarily in connection with such system.

"Purification plant" means that portion of a public water system that treats or improves the physical, chemical or bacteriological quality of the system's water to bring the water into compliance with state board of health standards. Unit processes installed to perform water filtration, ion exchange, electrodialysis, reverse osmosis, or iron and manganese removal shall be included within the scope of the term purification plant. Unit processes installed to allow in-line fluoridation, in-line chlorination, or chemical addition to inhibit corrosion are not included within the scope of the term purification plant.

"Relevant water system training" means training that:

(1) Is approved by the department;

(2) Has an influence on water quality, water supply, or public health protection; and

(3) Is directly related to the operation, or maintenance of a water system; or

(4) Is directly related to managing the operation or maintenance of a water system. Examples of acceptable management training include drinking water regulatory compliance, capacity development, rate setting, financial viability, water system security, and responding to drinking water emergencies.

"Responsible charge" means the operator(s) designated by the owner to be the certified operator(s) who makes the decisions regarding the daily operational activities of a public water system, water treatment facility and/or distribution system that will directly impact water quality and/or quantity of drinking water including, but not limited to, decisions concerning process control and system integrity.

"Satellite management agency (SMA)" means a person or entity that is approved by the department to own or operate public water systems on a regional or county-wide basis without the necessity for a physical connection between such systems.

"Service connection" means a connection to a public water system designed to provide water to a single family residence, or other residential or nonresidential population.

"Significant noncomplier" means a system that is violating or has violated department rules, and the violation may create, or has created an imminent or a significant risk to human health. Such violations include, but are not limited to, repeated violations of monitoring requirements, failure to address an exceedance of permissible levels of regulated contaminants, or failure to comply with treatment technique standards or requirements.

"Transient noncommunity (TNC)" means a Group A water system that serves:

• Twenty-five or more different people each day for sixty or more days within a calendar year; or

• Twenty-five or more of the same people each day for sixty or more days, but less than one hundred eighty days within the calendar year.

"Validated exam" means an exam that is independently reviewed by subject matter experts to ensure that the exam is based on a job analysis and related to the classification of the system or facility.

[Statutory Authority: Chapter 70.119 RCW. 05-06-122, § 246-292-010, filed 3/2/05, effective 4/2/05. Statutory Authority: Chapter 70.119 RCW and Safe Drinking Water Act, Public Law 104-182; 64 F.R. 5916 - 5921. 01-02-070, § 246-292-010, filed 12/29/00, effective 1/29/01. Statutory Authority: Chapter 70.119 RCW. 94-04-004, § 246-292-010, filed 1/20/94, effective 2/20/94. Statutory Authority: RCW 43.70.040. 91-02-049 (Order 121), recodified as § 246-292-010, filed 12/27/90, effective 1/31/91. Statutory Authority: RCW 70.119.050. 78-10-053 (Order 1343), § 248-55-020, filed 9/22/78.]

WAC 246-292-020 General system requirements. (1) The following public water systems shall designate the certified operator(s) in responsible charge of the daily operational activities of the public water system, water treatment facility, and/or distribution system that will directly impact water quality and/or quantity of drinking water as required under WAC 246-292-050:

(a) Group A community or nontransient noncommunity (NTNC) systems; and

(b) Group A transient noncommunity (TNC) systems classified as significant noncompliers (SNCs); and

(c) Group A transient noncommunity (TNC) systems using a surface water or GWI source.

(2) Operator certification requirement. Operators in responsible charge of the following public water systems or portions thereof shall be certified:

(a) Group A community and nontransient noncommunity (NTNC) systems;

(b) Group A transient noncommunity (TNC) systems classified as significant noncompliers (SNCs); and

(c) Group A transient noncommunity (TNC) systems using a surface water or GWI source.

(3) A designated certified operator shall be in responsible charge and available for each operating shift.

[Statutory Authority: Chapter 70.119 RCW and Safe Drinking Water Act, Public Law 104-182; 64 F.R. 5916 - 5921. 01-02-070, § 246-292-020, filed 12/29/00, effective 1/29/01. Statutory Authority: Chapter 70.119 RCW. 94-04-004, § 246-292-020, filed 1/20/94, effective 2/20/94. Statutory Authority: RCW 43.70.040. 91-02-049 (Order 121), recodified as § 246-292-020, filed 12/27/90, effective 1/31/91. Statutory Authority: RCW 70.119.050. 78-10-053 (Order 1343), § 248-55-030, filed 9/22/78.]

WAC 246-292-031 Certified operator duties. (1) The certified operator shall operate the public water system with due care and diligence for protecting public health and shall abide by applicable state and federal drinking water laws and regulations.

(2) The certified operator shall operate the water system consistent with experience and training appropriate to their level of certification.

(3) The certified operator shall perform his or her duties in accordance with this section. Failure to do so may threaten public health and safety which could result in the suspension or revocation of his or her certification.

[Statutory Authority: Chapter 70.119 RCW. 05-06-122, § 246-292-031, filed 3/2/05, effective 4/2/05.]

WAC 246-292-040 Classification of public water systems. (1) The department shall classify purification plants according to the Association of Boards of Certification's "*Purification Plant Criteria*" and set forth in the *Water Works Certification Program Guideline* (guideline). Copies of the guideline are available on request by contacting the Department of Health, Drinking Water Division, Water Works Certification Program P.O. Box 47822, Olympia, Washington 98504-7822.

(2) The department shall classify distribution systems into groups as follows:

Classification	Population Served*
Group S	less than 251
Group 1	251 to 1,500
Group 2	1,501 to 15,000
Group 3	15,001 to 50,000
Group 4	greater than 50,000

* If the population served is not known, apply this formula: Number of Service Connections x 2.5 = Population Served

[Statutory Authority: Chapter 70.119 RCW and Safe Drinking Water Act, Public Law 104-182; 64 F.R. 5916 - 5921. 01-02-070, § 246-292-040, filed 12/29/00, effective 1/29/01. Statutory Authority: Chapter 70.119 RCW. 94-04-004, § 246-292-040, filed 1/20/94, effective 2/20/94. Statutory Authority: RCW 43.70.040. 91-02-049 (Order 121), recodified as § 246-292-040, filed 12/27/90, effective 1/31/91. Statutory Authority: RCW 70.119.050. 78-10-053 (Order 1343), § 248-55-050, filed 9/22/78.]

WAC 246-292-050 Minimum certification requirements for public water systems. (1) Owners shall have at least one certified operator in responsible charge of the daily operational activities of their system as follows:

(a) A water treatment plant operator (WTPO) shall be responsible for the operation of:

(i) A purification plant with a Class 2 rating or higher;

(ii) Any purification plant using complex filtration technology; or

(iii) Any unfiltered Group A surface water or GWI system with one hundred or more services in use at any one time.

(b) A basic treatment operator (BTO) shall be responsible for the operation of:

(i) A public water system with a Class 1 purification plant rating; or

(ii) An unfiltered Group A surface water or GWI system with less than one hundred services in use at any one time.

(c) A water distribution manager (WDM) shall be responsible for the operation of a Group A water system:

(i) Serving a population greater than two hundred fifty people.

(ii) A Class 2 purification plant rating or higher; or

(iii) Any purification plant using complex filtration technology.

(d) A water distribution specialist (WDS) shall be responsible for the operation of:

(i) Group A community or NTNC water systems serving a population of two hundred fifty people or less.

(ii) Group A TNC systems classified as significant noncompliers (SNCs) and not required to provide treatment other than simple disinfection if serving a population of two hundred fifty people or less.

(2) Owners required to develop a cross-connection control program in accordance with WAC 246-290-490 shall

ensure that a cross-connection control specialist (CCS) is responsible for:

(a) The system's cross-connection control program;

(b) Initial inspection of premises served by the system, for cross-connections; and

(c) Periodic reinspection of premises served by the system, for cross-connections.

(3) Owners shall ensure that a backflow assembly tester (BAT) is responsible for inspecting, testing, and monitoring backflow prevention assemblies in accordance with WAC 246-290-490.

(4) A WTPO and WDM shall be certified at a level equal to or higher than the water system's classification rating assigned by the department in accordance with WAC 246-292-040.

(5) The certified operator in responsible charge of each operating shift shall be certified at a minimum of one level lower than the classification of the purification plant or distribution system.

[Statutory Authority: Chapter 70.119 RCW and Safe Drinking Water Act, Public Law 104-182; 64 F.R. 5916 - 5921. 01-02-070, § 246-292-050, filed 12/29/00, effective 1/29/01. Statutory Authority: Chapter 70.119 RCW. 94-04-004, § 246-292-050, filed 1/20/94, effective 2/20/94. Statutory Authority: RCW 43.70.040. 91-02-049 (Order 121), recodified as § 246-292-050, filed 12/27/90, effective 1/31/91. Statutory Authority: RCW 70.119.050. 78-10-053 (Order 1343), § 248-55-060, filed 9/22/78.]

WAC 246-292-055 Minimum requirements for contract operators. (1) Contract operators in responsible charge of the daily operational activities of three or more public water systems for operation of a system shall be certified as follows:

(a) At a minimum, a WDM and CCS, with the WDM level determined by the largest public water system operated;

(b) A BTO for public water systems with a Class 1 purification plant rating; and

(c) A WTPO for public water systems with a Class 2 purification plant rating or higher or any purification plant using complex filtration technology.

(2) Contract operators shall be available on a twenty-four-hour per day basis.

(3) Contract operators shall submit two copies of all signed operations contracts to the department within thirty days of the effective date.

(4) Contract operators who are satellite management agencies (SMAs) shall also comply with the provisions of RCW 70.116.134.

[Statutory Authority: Chapter 70.119 RCW and Safe Drinking Water Act, Public Law 104-182; 64 F.R. 5916 - 5921. 01-02-070, § 246-292-055, filed 12/29/00, effective 1/29/01. Statutory Authority: Chapter 70.119 RCW. 94-04-004, § 246-292-055, filed 1/20/94, effective 2/20/94.]

WAC 246-292-060 Minimum education and experience requirements for water works operators. Minimum education and operating experience requirements for the following water works operator classifications and levels shall be as indicated in Tables 1A and 1B:

Table 1A

MINIMUM EDUCATION AND OPERATING EXPERIENCE REQUIREMENTS

WATER WORKS OPERATOR CLASSIFICATIONS	LEVEL									
	OPERATOR-IN-TRAINING OIT*		1		2		3		4	
	Education	Operating Experience	Education	Operating Experience	Education	Operating Experience	Education	Operating Experience	Education	Operating Experience
Water Distribution Manager (WDM)	12 years	3 months	12 years	1 year	12 years	3 years	14 years	4 years	16 years	4 years
Water Treatment Plant Operator (WTPO)	12 years	3 months	12 years	1 year	12 years	3 years	14 years	4 years	16 years	4 years

* OIT experience may be fulfilled by three months operating experience or thirty hours of relevant water system training (three CEUs or college credits).

Table 1B

MINIMUM EDUCATION AND OPERATING EXPERIENCE REQUIREMENTS

WATER WORKS OPERATOR CLASSIFICATIONS	Education	Operating Experience
Basic Treatment Operator (BTO)	12 years	6 months
Water Distribution Specialist (WDS)	12 years	6 months
Cross-connection Control Specialist (CCS)	12 years	6 months
Backflow Assembly Tester (BAT)	NA	NA

(1) Minimum education requirement shall be the acceptable level of education, or experience which may be substituted for education as outlined in the guideline.

(2) Minimum operating experience requirement shall be the routine on-site performance of duties in a water purification plant or distribution system. Those duties shall affect plant or system performance and/or water quality.

(3) The department may allow substitutions of a person's relevant experience when the person cannot meet the formal education requirement, or vice versa in the WDM, WTPO, BTO, WDS and CCS classifications as outlined in the guideline.

[Statutory Authority: Chapter 70.119 RCW and Safe Drinking Water Act, Public Law 104-182; 64 F.R. 5916 - 5921. 01-02-070, § 246-292-060, filed 12/29/00, effective 1/29/01. Statutory Authority: Chapter 70.119 RCW. 94-04-004, § 246-292-060, filed 1/20/94, effective 2/20/94. Statutory Authority: RCW 43.70.040. 91-02-049 (Order 121), recodified as § 246-292-060, filed 12/27/90, effective 1/31/91. Statutory Authority: RCW 70.119.050. 78-10-053 (Order 1343), § 248-55-070, filed 9/22/78.]

WAC 246-292-070 Application and examination. (1) Applicants for any classification of water works operator shall:

(a) Submit a completed application, application fee and examination charge to cover the cost of a validated exam;

(b) Meet the minimum education and operating experience criteria for the level of certification for which they are applying in accordance with WAC 246-292-060; and

(c) Pass a validated examination.

(2) The department shall:

(a) Ensure a validated examination is conducted at least three times annually at convenient places and times as set by the department;

(b) Provide notice of places and times of regularly scheduled examinations; and

(c) Issue applicable certificates to applicants meeting all the conditions for certification.

(3) Applicants who fail or do not appear for their scheduled examination may reapply for a regularly scheduled examination by submitting a new application, application fee and examination charge.

[Statutory Authority: Chapter 70.119 RCW and Safe Drinking Water Act, Public Law 104-182; 64 F.R. 5916 - 5921. 01-02-070, § 246-292-070, filed 12/29/00, effective 1/29/01. Statutory Authority: Chapter 70.119 RCW. 94-04-004, § 246-292-070, filed 1/20/94, effective 2/20/94. Statutory Authority: RCW 43.70.040. 91-02-049 (Order 121), recodified as § 246-292-070, filed 12/27/90, effective 1/31/91. Statutory Authority: RCW 70.119.050. 78-10-053 (Order 1343), § 248-55-080, filed 9/22/78.]

WAC 246-292-075 Reciprocity. The department may issue a certification without examination to individuals who possess a certificate from another state or province if:

(1) The applicant possesses a certificate from a state or province having substantially equivalent standards as determined by the department; and

(2) A completed application, application fee and a copy of the valid state or province certificate are submitted to the department.

[Statutory Authority: Chapter 70.119 RCW and Safe Drinking Water Act, Public Law 104-182; 64 F.R. 5916 - 5921. 01-02-070, § 246-292-075, filed 12/29/00, effective 1/29/01. Statutory Authority: Chapter 70.119 RCW. 94-04-004, § 246-292-075, filed 1/20/94, effective 2/20/94.]

WAC 246-292-080 System temporary operator certification. (1) The department may issue temporary certification to an operator without examination if:

(a) The public water system submits:

(i) A letter requesting temporary certification for the operator; and

(ii) The applicable fee.

(b) The operator completes and submits a certification application; and

(c) The operator meets or will meet the minimum education and operating experience requirements of the mandatory classification for the vacated position, prior to the expiration date of the temporary certification.

(2) Only one temporary certification may be issued in each instance of any position vacancy.

(3) The temporary certification shall be valid for up to twelve months.

(4) The temporary certification shall be specific to the designated system and is not transferrable to any other system or operator.

[Statutory Authority: Chapter 70.119 RCW and Safe Drinking Water Act, Public Law 104-182; 64 F.R. 5916 - 5921. 01-02-070, § 246-292-080, filed 12/29/00, effective 1/29/01. Statutory Authority: Chapter 70.119 RCW. 94-04-004, § 246-292-080, filed 1/20/94, effective 2/20/94. Statutory Authority: RCW 43.70.040. 91-02-049 (Order 121), recodified as § 246-292-080, filed 12/27/90, effective 1/31/91. Statutory Authority: RCW 70.119.050. 78-10-053 (Order 1343), § 248-55-090, filed 9/22/78.]

WAC 246-292-085 Grandparenting. Operators who received a grandparented certification prior to January 1, 2001, for the minimum classification of a water system remain subject to the following:

(1) A grandparent operator certification is site specific and nontransferrable;

(2) A grandparented operator shall meet all certification renewal requirements under the provisions of WAC 246-292-090;

(3) If a grandparented operator fails to renew his or her certification under WAC 246-292-090, the grandparent certification is no longer valid. To become recertified, the operator must apply for certification and meet all the requirements of a new applicant; and

(4) If plant or distribution system classification changes to a higher level, the grandparent certification is no longer valid; and the owner and operator shall comply with chapter 246-292 WAC.

[Statutory Authority: Chapter 70.119 RCW. 05-06-122, § 246-292-085, filed 3/2/05, effective 4/2/05. Statutory Authority: Chapter 70.119 RCW and Safe Drinking Water Act, Public Law 104-182; 64 F.R. 5916 - 5921. 01-02-070, § 246-292-085, filed 12/29/00, effective 1/29/01.]

WAC 246-292-090 Renewal of certificates. (1) The operator must renew his or her certificate by January 1st of each year.

(2) The department shall renew an operator's certificates when the operator:

(a) Pays the applicable renewal fee; and

(b) Demonstrates completion of required professional growth in accordance with subsections (3) and (4) of this section. The operator must provide evidence of professional growth acceptable to the department within the designated professional growth reporting period as described in the department guideline titled, *Water Works Certification Program Guideline*.

(3) To demonstrate professional growth, a holder of WDM, WTPO, WDS, BTO or CCS certification shall accomplish one of the following activities during each professional growth reporting period:

(a) Accumulate a minimum of three continuing education units (CEU), or college credits for training that:

(i) Has an influence on water quality, water supply, or public health protection; and

(ii) Is directly relevant to the operation, or maintenance of a water system; or

(iii) Is directly relevant to managing the operation, or maintenance activities of a water system;

(b) Advance by examination in the Washington water works operator certification program within the classifications WDM and WTPO to a level 2, 3, or 4; or

(c) Achieve certification by examination in a different classification as shown below:

(i) WDM to WTPO, BTO or CCS;

(ii) WTPO to WDM, or CCS;

(iii) WDS to WDM, WTPO, BTO or CCS;

(iv) BTO to WDM, WTPO, WDS or CCS; or

(v) CCS to WDM, WTPO, BTO, or WDS.

(4) To demonstrate professional growth, a certified BAT must satisfactorily complete the department's backflow assembly tester professional growth examination during each professional growth reporting period.

(5) If an operator fails to renew his or her certificate, the department shall notify the operator by December 31st, that the certificate is temporarily valid for two months beginning January 1st.

(6) If an operator fails to renew the certificate within the two-month period, the certificate is invalid. The department shall notify the operator in writing of an invalid certificate.

(7) An operator who fails to renew his or her certification may reapply for certification, but must meet the requirements for a new applicant.

[Statutory Authority: Chapter 70.119 RCW. 05-06-122, § 246-292-090, filed 3/2/05, effective 4/2/05. Statutory Authority: Chapter 70.119 RCW and Safe Drinking Water Act, Public Law 104-182; 64 F.R. 5916 - 5921. 01-02-070, § 246-292-090, filed 12/29/00, effective 1/29/01. Statutory Authority: Chapter 70.119 RCW. 94-04-004, § 246-292-090, filed 1/20/94, effective 2/20/94. Statutory Authority: RCW 43.70.040. 91-02-049 (Order 121), recodified as § 246-292-090, filed 12/27/90, effective 1/31/91. Statutory Authority: Chapter 201, Laws of 1982. 82-13-009 (Order 1823), § 248-55-110, filed 6/4/82. Statutory Authority: RCW 70.119.050. 78-10-053 (Order 1343), § 248-55-110, filed 9/22/78.]

WAC 246-292-100 Revocation and suspension. (1) The department may suspend an operator's certificate for up to a year or revoke an operator's certificate for up to five years if the operator:

(a) Obtains a certificate by fraud or deceit;

(b) Performs an act of gross negligence in the operation of a purification plant or a distribution system; or

(c) Intentionally violates the requirements of this chapter or department statutes, rules or orders.

(2) Except in a case of fraud, deceit, or gross negligence, the department may not revoke or suspend a certificate under subsection (1)(c) of this section until the department notifies the operator in writing of the violation and provides an opportunity for the operator to correct the violation.

(3) A revocation or suspension action brought under this section shall be conducted in accordance with RCW 43.70.115, chapter 34.05 RCW, and chapter 246-10 WAC.

(4) A person whose certificate is revoked may not apply for certification until the period of revocation has ended.

(5) After the revocation period has ended, a person whose certificate was revoked may reapply for certification as a new operator under WAC 246-292-070.

(6) An operator whose certificate is suspended shall continue to meet all renewal requirements in accordance with WAC 246-292-090 in order to maintain certification after the suspension period has lapsed.

[Statutory Authority: Chapter 70.119 RCW. 05-06-122, § 246-292-100, filed 3/2/05, effective 4/2/05. Statutory Authority: Chapter 70.119 RCW and Safe Drinking Water Act, Public Law 104-182; 64 F.R. 5916 - 5921. 01-02-070, § 246-292-100, filed 12/29/00, effective 1/29/01. Statutory Authority: Chapter 70.119 RCW. 94-04-004, § 246-292-100, filed 1/20/94, effective 2/20/94. Statutory Authority: RCW 43.70.040. 91-02-049 (Order 121), recodified as § 246-292-100, filed 12/27/90, effective 1/31/91. Statutory Authority: RCW 70.119.050. 78-10-053 (Order 1343), § 248-55-120, filed 9/22/78.]

WAC 246-292-110 Enforcement. When any Group A water system or operator is out of compliance with these regulations, the department may initiate appropriate enforcement actions as authorized under chapter 70.119 and 70.119A RCW. These actions may include any one or combination of the following:

(1) Issuance of informal letters instructing or requiring appropriate corrective measures;

(2) Issuance of a compliance schedule;

(3) Issuance of a departmental order;

(4) Issuance of civil penalties for up to five thousand dollars per day per violation;

(5) Prosecution as a criminal misdemeanor with fines up to one hundred dollars per offense;

(6) Revocation or suspension of a license; and

(7) Other legal action by the attorney general or local prosecutor.

[Statutory Authority: Chapter 70.119 RCW and Safe Drinking Water Act, Public Law 104-182; 64 F.R. 5916 - 5921. 01-02-070, § 246-292-110, filed 12/29/00, effective 1/29/01. Statutory Authority: Chapter 70.119 RCW. 94-04-004, § 246-292-110, filed 1/20/94, effective 2/20/94. Statutory Authority: RCW 43.70.040. 91-02-049 (Order 121), recodified as § 246-292-110, filed 12/27/90, effective 1/31/91. Statutory Authority: RCW 70.119.050. 78-10-053 (Order 1343), § 248-55-130, filed 9/22/78.]

WAC 246-292-160 Water works certification fees. (1) Operator fees:

(a) Applicable fees are listed in Table 2 of this section;

Table 2

WATER WORKS OPERATOR FEES

OPERATOR CLASSIFICATION	APPLICATION FEE	REAPPLICATION FEE	ANNUAL RENEWAL FEE	LATE FEE
WTPO	$87.00	$42.00	$42.00*	$35.00 **
WDM	$87.00	$42.00	$42.00*	$35.00 **
WDS	$87.00	$42.00	$42.00*	$35.00 **
CCS	$51.00	$42.00	$42.00*	$35.00 **
BAT	$51.00	$42.00	$42.00*	$35.00
BTO	$51.00	$42.00	$42.00*	$35.00

* The annual renewal fee for a WTPO,WDM,WDS and CCS certification is thirty-five dollars regardless of the number of classifications held.

** The annual late fee for a WTPO, WDM, WDS, and CCS certification is thirty-five dollars regardless of the number of classifications held.

(b) The department will assess a late fee to operators who fail to submit the required fee within the time period specified on the renewal form; and

(c) The fee for application for reciprocity is one hundred seventy-seven dollars per classification.

(2) Group A system fees:

(a) Applicable fees are listed as indicated in Table 3 of this section.

Table 3
ANNUAL SYSTEM CERTIFICATION FEES

SYSTEM SIZE* (Number of Equivalent Services)	SYSTEM FEE
Less than 601 Services	$132.00
601 through 6,000 Services	$403.00
6,001 through 20,000 Services	$536.00
More than 20,000 Services	$809.00

* Systems designated by the department as approved satellite management agencies (SMAs) shall pay a fee based on total services in all systems owned by the SMA.

(b) A Group A system must pay the fee in Table 3 in conjunction with the system's annual operating permit fee required in chapter 246-294 WAC.

(c) The department will assess a late fee against any system that fails to submit its fees to the department within the designated time period. The late fee is based on the water system's classification and is equal to ten percent of the system fee in Table 3 or thirty-five dollars, whichever is greater.

(d) The system fee for issuance of a temporary certification shall be eighty-seven dollars for each temporary position.

(3) Fees are nonrefundable and transfers of fees are not allowable.

(4) Fees required under this chapter must be paid by check or money order made payable to the department of health and mailed to the department at P.O. Box 1099, Olympia, Washington 98507-1099.

[Statutory Authority: RCW 43.70.250 and 70.119.160. 05-23-152, § 246-292-160, filed 11/22/05, effective 12/23/05; 04-12-123, § 246-292-160, filed 6/2/04, effective 7/3/04. Statutory Authority: RCW 43.70.250, 43.20B.020, and 70.119.160. 03-13-028, § 246-292-160, filed 6/10/03, effective 7/11/03. Statutory Authority: RCW 43.70.250 and 70.119.160. 02-01-065, § 246-292-160, filed 12/14/01, effective 1/14/02. Statutory Authority: Chapter 70.119 RCW and Safe Drinking Water Act, Public Law 104-182; 64 F.R. 5916 - 5921. 01-02-070, § 246-292-160, filed 12/29/00, effective 1/29/01. Statutory Authority: RCW 43.70.250. 00-02-015, § 246-292-160, filed 12/27/99, effective 1/27/00; 99-12-022, § 246-292-160, filed 5/24/99, effective 6/24/99. Statutory Authority: RCW 43.20B.020. 98-12-015, § 246-292-160, filed 5/22/98, effective 6/22/98. Statutory Authority: Chapter 70.119 RCW. 94-04-004, § 246-292-160, filed 1/20/94, effective 2/20/94.]

Chapter 246-293 WAC
WATER SYSTEM COORDINATION ACT

WAC

246-293-001 Purpose.

PART I. PROCEDURAL REGULATIONS

246-293-110 Definitions.
246-293-120 Preliminary assessment—Requirement.
246-293-130 Preliminary assessment—Procedures.
246-293-140 Declaration of critical water supply service area.
246-293-150 Water utility coordinating committee—Establishment.
246-293-160 Water utility coordinating committee—Purpose.
246-293-170 Establishment of external critical water supply service area boundaries—Procedures.
246-293-180 Establishment of external critical water supply service area boundaries—Criteria.
246-293-190 Establishment of critical water supply service area boundaries—Effect.
246-293-200 Alteration of external critical water supply service area boundaries.
246-293-210 Update of external critical water supply service area boundaries.
246-293-220 Coordinated water system plan—Requirement.
246-293-230 Coordinated water system plan—Water system plan.
246-293-240 Coordinated water system plan—Supplementary provisions.
246-293-250 Service area agreements—Requirement.
246-293-260 Coordinated water system plan—Procedures (water utility coordinating committee).
246-293-270 Coordinated water system plan—Effect.
246-293-280 Coordinated water system plan—Update.
246-293-290 Coordinated water system plan—Local review.
246-293-300 Coordinated water system plan—Department approval.

PART II. RESOLUTION OF SERVICE AREA CONFLICTS

246-293-401 Purpose.
246-293-420 Public hearing.
246-293-430 Initial decision.

PART III. FIRE FLOW

246-293-601 Purpose.
246-293-602 Scope.
246-293-610 Definitions.
246-293-620 Administration.
246-293-630 Application.
246-293-640 Minimum standards for fire flow.
246-293-650 Minimum standards for fire hydrants.
246-293-660 Minimum standards for system reliability.
246-293-670 Alternate methods.
246-293-680 Local standards.
246-293-690 Severability.

DISPOSITION OF SECTIONS FORMERLY CODIFIED IN THIS CHAPTER

246-293-310 Severability. [Statutory Authority: RCW 43.70.040. 91-02-049 (Order 121), recodified as § 246-293-310, filed 12/27/90, effective 1/31/91. Statutory Authority: Chapter 70.116 RCW. 78-07-048 (Order 1309), § 248-56-900, filed 6/28/78.] Repealed by 97-20-101, filed 9/29/97, effective 10/30/97. Statutory Authority: RCW 43.70.040.

246-293-440 Adjudicative proceeding. [Statutory Authority: RCW 43.70.040. 91-02-049 (Order 121), recodified as § 246-293-440, filed 12/27/90, effective 1/31/91. Statutory Authority: Chapter 34.05 RCW, RCW 34.05.220 (1)(a) and 70.116.050. 90-06-019 (Order 039), § 248-59-030, filed 2/28/90, effective 3/1/90. Statutory Authority: RCW 74.116.070 [70.116.070]. 83-01-015 (Order 1919), § 248-59-030, filed 12/6/82.] Repealed by 93-13-005 (Order 369), filed 6/3/93, effective 7/4/93. Statutory Authority: RCW 43.70.040.

WAC 246-293-001 Purpose. This chapter is promulgated pursuant to the authority granted in the Public Water System Coordination Act of 1977, chapter 70.116 RCW, for the purpose of implementing a program relating to public water system coordination within the state of Washington, for evaluation and determination of critical water supply service areas, and assistance for orderly and efficient public water system planning.

[Statutory Authority: RCW 43.70.040. 91-02-049 (Order 121), recodifed as § 246-293-001, filed 12/27/90, effective 1/31/91. Statutory Authority: Chapter 70.116 RCW. 78-07-048 (Order 1309), § 248-56-100, filed 6/28/78.]

PART I. PROCEDURAL REGULATIONS

WAC 246-293-110 Definitions. (1) "Public water system" - Any system or water supply intended or used for human consumption or other domestic uses including, but not limited to, source, treatment, storage, transmission and distribution facilities where water is furnished to any community, number of individuals or is made available to the public for human consumption or domestic use. This definition shall exclude any water system serving one single family residence, water systems existing prior to September 21, 1977 which are owner operated and serve less than ten single family residences, and water systems serving no more than one industrial plant.

(2) "Purveyor" - Any agency or subdivision of the state or any municipality, firm, company, mutual or cooperative association, institution, partnership, person, or any other entity that owns or operates a public water system for wholesale or retail service (or their authorized agent).

(3) "Municipality" - Any county, city, town, or any other entity having its own incorporated government for local affairs including, but not limited to, metropolitan municipal corporation, public utility district, water district, irrigation district, sewer district, and/or port district.

(4) "Inadequate water quality" - An excess of maximum contaminant levels established by the state board of health (chapter 248-54 WAC).

(5) "Unreliable service" - Low pressure or quantity problems, and/or frequent service interruption inconsistent with state board of health requirements (chapter 248-54 WAC).

(6) "Lack of coordinated planning" - Failure to resolve existing or potential areawide problems related to:

(a) Insufficient control over development of new public water systems.

(b) Adjacent or nearby public water systems constructed according to incompatible design standards.

(c) No future service area agreements, or conflicts in existing or future service areas.

(d) Adjacent public water systems which could benefit from emergency interties or joint-use facilities.

(e) Water system plans which have not been updated in accordance with chapter 248-54 WAC.

(f) Inconsistencies between neighboring water system plans, or failure to consider adopted county or city land use plans or policies.

(7) "Critical water supply service area" - A geographical area designated by the department or county legislative authority characterized by public water system problems related to inadequate water quality, unreliable service, and/or lack of coordinated water system planning. It may be further characterized by a proliferation of small, inadequate public water systems, or by water supply problems which threaten the present or future water quality or reliability of service in such a manner that efficient and orderly development may best be achieved through coordinated planning by public water systems in the area.

(8) "County legislative authority" - The board of county commissioners or that body assigned such duties by a county charter as enacting ordinances, passing resolutions, and appropriating public funds for expenditure.

(9) "Local planning agency" - The division of city or county government responsible for land use planning functions.

(10) "Coordinated water system plan" - A plan for public water systems within a critical water supply service area which identifies the present and future water system concerns and sets forth a means for meeting those concerns in the most efficient manner possible.

(11) "Existing service area" - A specific area within which direct service or retail service connections to customers of a public water system are currently available.

(12) "Future service area" - A specific area for which water service is planned by a public water system, as determined by written agreement between purveyors provided for in WAC 248-56-730.

(13) "Department" - The Washington state department of social and health services.

[Statutory Authority: RCW 43.70.040. 91-02-049 (Order 121), recodified as § 246-293-110, filed 12/27/90, effective 1/31/91. Statutory Authority: Chapter 70.116 RCW. 78-07-048 (Order 1309), § 248-56-200, filed 6/28/78.]

WAC 246-293-120 Preliminary assessment—Requirement. In areas where public water systems are suspected of having problems related to inadequate water quality, unreliable service, or lack of coordinated planning, a preliminary assessment shall be undertaken to determine if the geographical area should be designated a critical water supply service area. (See WAC 248-56-200 for definitions.)

[Statutory Authority: RCW 43.70.040. 91-02-049 (Order 121), recodified as § 246-293-120, filed 12/27/90, effective 1/31/91. Statutory Authority: Chapter 70.116 RCW. 78-07-048 (Order 1309), § 248-56-300, filed 6/28/78.]

WAC 246-293-130 Preliminary assessment—Procedures. (1) The preliminary assessment shall be conducted under the authority of the county legislative authority(ies) and the department with assistance from affected state and local agencies and water purveyors.

(2) Notice that a preliminary assessment is being undertaken shall be made to all affected parties, those who have demonstrated an interest, and the local news media.

(3) The preliminary assessment shall be presented in report form, as short and factual as possible, and shall consider at least the following topics as they relate to public water systems in the potential critical water supply service area:

(a) Existing water systems, including:

(i) History of water quality, reliability and service,

(ii) General fire fighting capability of the utilities, and

(iii) Identification of major facilities which need to be expanded, altered, or replaced.

(b) Availability and adequacy of future water source(s).

(c) Service area boundaries, including a map of established boundaries and identification of systems without established boundaries.

(d) Present growth rate.

(e) Status of water system planning, land use planning, and coordination, including a list of land use plans and policies adopted by local general purpose governments.

(4) Upon completion, the preliminary assessment shall be submitted to the county legislative authority(ies) and the department for review. A copy shall also be transmitted to all potentially affected water purveyors and appropriate news media.

[Statutory Authority: RCW 43.70.040. 91-02-049 (Order 121), recodified as § 246-293-130, filed 12/27/90, effective 1/31/91. Statutory Authority: Chapter 70.116 RCW. 78-07-048 (Order 1309), § 248-56-310, filed 6/28/78.]

WAC 246-293-140 Declaration of critical water supply service area. (1) Based upon review of the preliminary assessment, if findings indicate that a geographical area does have problems related to inadequate water quality, unreliable service, or lack of coordinated planning, the county legislative authority(ies) or the department shall declare that area a critical water supply service area.

(2) The declaration shall be in the format of a legislative enactment signed by the county legislative authority(ies), or administrative declaration signed by the secretary of the department or his designee.

(3) The declaring agency shall file its declaration with the other agency(ies) and notify in writing the appropriate local planning agencies, affected water purveyors, and the local news media within ten days.

[Statutory Authority: RCW 43.70.040. 91-02-049 (Order 121), recodified as § 246-293-140, filed 12/27/90, effective 1/31/91. Statutory Authority: Chapter 70.116 RCW. 78-07-048 (Order 1309), § 248-56-400, filed 6/28/78.]

WAC 246-293-150 Water utility coordinating committee—Establishment. (1) Within thirty days following the declaration of a critical water supply service area, a water utility coordinating committee composed of not less than three voting members shall be appointed by the declaring authority.

(2) The water utility coordinating committee shall consist of one representative from each of the following:

(a) County legislative authority within the declared area;

(b) County planning agency having jurisdiction within the declared area;

(c) Health agency having jurisdiction within the declared area under chapters 70.08, 70.05, 43.20 RCW; and

(d) Water purveyor with over fifty services within the declared area.

(Other interested persons may be appointed as nonvoting members of the committee by the authority declaring the critical water supply service area if determined appropriate.)

(3) At the first meeting of the water utility coordinating committee, the following shall be determined:

(a) Chairperson; and

(b) Rules for conducting business, including voting procedure.

[Statutory Authority: RCW 43.70.040. 91-02-049 (Order 121), recodified as § 246-293-150, filed 12/27/90, effective 1/31/91. Statutory Authority: Chapter 70.116 RCW. 89-16-065 (Order 2840), § 248-56-500, filed 7/31/89, effective 8/31/89; 78-07-048 (Order 1309), § 248-56-500, filed 6/28/78.]

WAC 246-293-160 Water utility coordinating committee—Purpose. (1) The initial purpose of the water utility coordinating committee shall be to recommend external critical water supply service area boundaries to the county legislative authority(ies) within six months of appointment of the committee. (See WAC 248-56-600.)

(2) Following establishment of external critical water supply service area boundaries, the water utility coordinating committee shall be responsible for development of the coordinated water system plan. (See WAC 248-56-740.)

[Statutory Authority: RCW 43.70.040. 91-02-049 (Order 121), recodified as § 246-293-160, filed 12/27/90, effective 1/31/91. Statutory Authority: Chapter 70.116 RCW. 78-07-048 (Order 1309), § 248-56-510, filed 6/28/78.]

WAC 246-293-170 Establishment of external critical water supply service area boundaries—Procedures. (1) Proposed boundaries shall be documented by a written report which includes:

(a) A map and narrative description of the recommended boundary.

(b) A narrative statement outlining the reasons for the recommended boundary location, the criteria used and relative importance of each.

(2) Prior to submittal of recommended external boundaries to the county legislative authority(ies), the water utility coordinating committee shall conduct at least one informational meeting for the purpose of soliciting public input.

(3) The water utility coordinating committee shall make a formal report of its recommended external critical water supply service area boundaries to the county legislative authority(ies).

(4) The county legislative authority(ies) shall conduct at least two public hearings on the proposed boundaries within six months from the date the boundaries were submitted by the water utility coordinating committee, for the purpose of soliciting responses to the proposed boundaries.

(5) Within six months from the date proposed boundaries are submitted to the county legislative authority(ies), one of the following actions may be taken by the county legislative authority(ies):

(a) Ratify the proposed boundaries based on findings at the public hearings, or

(b) Modify the proposed boundaries in accordance with findings of the public hearings, and then ratify the revised boundaries.

If neither of the above actions are taken by the county legislative authority(ies) within six months, the boundaries as stated in the proposal submitted by the water utility coordinating committee to said county legislative authority(ies) shall be automatically ratified.

[Statutory Authority: RCW 43.70.040. 91-02-049 (Order 121), recodified as § 246-293-170, filed 12/27/90, effective 1/31/91. Statutory Authority: Chapter 70.116 RCW. 78-07-048 (Order 1309), § 248-56-600, filed 6/28/78.]

WAC 246-293-180 Establishment of external critical water supply service area boundaries—Criteria. (1) The water utility coordinating committee, in recommending, and county legislative authority(ies), in determining the location of external critical water supply service area boundaries shall consider factors including, but not limited to:

(a) Existing land use,

(b) Projected land use and permitted densities as documented in adopted county or city plans, ordinances and/or growth policies for at least ten years into the future,

(c) Other planning activities or boundaries which may affect land use or water system planning,

(d) Physical factors limiting provision of water service,

(e) Existing political boundaries, including boundary agreements in effect and attitudes towards expanding those boundaries,

(f) Future service areas of existing utilities,

(g) Hydraulic factors, including potential pressure zones or elevations,

(h) Economic ability of the public water systems to meet minimum service requirements.

(2) External critical water supply service area boundaries shall not divide any purveyor's existing, contiguous service area. Areas served by a wholesale purveyor may be divided into as many existing service areas as may be justified by geography, engineering or other factors discussed in the preliminary assessment.

[Statutory Authority: RCW 43.70.040. 91-02-049 (Order 121), recodified as § 246-293-180, filed 12/27/90, effective 1/31/91. Statutory Authority: Chapter 70.116 RCW. 78-07-048 (Order 1309), § 248-56-610, filed 6/28/78.]

WAC 246-293-190 Establishment of critical water supply service area boundaries—Effect. (1) No new public water system shall be approved within a critical water supply service area subsequent to establishment of external boundaries unless specifically authorized by the department. Authorization shall be based upon compliance with the following:

(a) If unanticipated demand for water supply occurs within a purveyor's future service area, the following shall apply in the listed sequence:

(i) The existing purveyor shall provide service in a timely and reasonable manner consistent with state board of health regulations; or

(ii) A new public water system may be developed on a temporary basis. Before authorization, a legal agreement will be required which includes a schedule for the existing purveyor to assume management and/or connect the new public water system to the existing system; or

(iii) A new public water system may be developed. Before authorization, a revised service area agreement establishing the new purveyor's future service area will be required.

(b) If a demand for water supply occurs outside any purveyor's future service area, the following shall apply in the listed sequence:

(i) Those persons anticipating the need for water service shall contact existing nearby purveyors within the critical water supply service area to determine whether any will be interested in expanding their system to provide water service in a timely and reasonable manner consistent with state board of health regulations.

(ii) A new public water system may be developed on a temporary basis. Before authorization, a legal agreement will be required which includes a schedule for an existing system to assume management and/or connect the new public water system to an existing system; or

(iii) A new public water system may be developed.

Any of the options listed in subdivisions (b)(i), (b)(ii), or (b)(iii) will require establishment of new or revised service area agreements.

(2) If a new public water system is developed, it shall have an approved water system plan pursuant to WAC 248-54-580 and the provisions of this chapter. The plan shall include a section addressing the outcome of subsections (1)(a), or (1)(b) along with documented confirmation by the appropriate existing purveyors(s).

(3) Any proposed new public water system shall not be inconsistent with local adopted land use plans, shoreline management programs, and/or development policies as determined by the appropriate county or city legislative authority(ies).

(4) If a coordinated water system plan has been approved for the affected area, all proposed new public water systems shall be consistent with the provisions of that plan.

[Statutory Authority: RCW 43.70.040. 91-02-049 (Order 121), recodified as § 246-293-190, filed 12/27/90, effective 1/31/91. Statutory Authority: Chapter 70.116 RCW. 78-07-048 (Order 1309), § 248-56-620, filed 6/28/78.]

WAC 246-293-200 Alteration of external critical water supply service area boundaries. (1) After establishment of external critical water supply service area boundaries, those boundaries may not be altered until the coordinated water system plan is completed.

(2) Alteration of external critical water supply service area boundaries may be initiated by the department or county legislative authority(ies) in accordance with the procedures and criteria identified in WAC 248-56-600 and 248-56-610. In addition:

(a) The department or county legislative authority(ies), whichever initiates alteration of external boundaries, shall prepare a brief report documenting the need for such alteration, and

(b) The department or county legislative authority(ies), whichever initiates preparation of the report, shall reconvene the water utility coordinating committee and present the report to the committee, together with instructions for committee action.

(3) The coordinated water system plan shall be revised as necessary, due to alteration of external critical water supply service area boundaries, within six months of the date of such action taken by the county legislative authority(ies), unless an extended schedule is approved by the department.

[Statutory Authority: RCW 43.70.040. 91-02-049 (Order 121), recodified as § 246-293-200, filed 12/27/90, effective 1/31/91. Statutory Authority: Chapter 70.116 RCW. 78-07-048 (Order 1309), § 248-56-630, filed 6/28/78.]

WAC 246-293-210 Update of external critical water supply service area boundaries. External critical water supply service area boundaries shall be reviewed by the water utility coordinating committee and the county legislative authority(ies) at least once every five years, as part of the update of the coordinated water system plan. (See WAC 248-56-760.)

[Statutory Authority: RCW 43.70.040. 91-02-049 (Order 121), recodified as § 246-293-210, filed 12/27/90, effective 1/31/91. Statutory Authority:

Chapter 70.116 RCW. 78-07-048 (Order 1309), § 248-56-640, filed 6/28/78.]

WAC 246-293-220 Coordinated water system plan—Requirement. (1) A coordinated water system plan shall be required for the entire area within the external critical water supply service area boundaries.

(2) In critical water supply service areas where more than one water system exists, a coordinated water system plan shall consist of either:

(a) A compilation of water system plans approved pursuant to WAC 248-54-580, together with supplementary provisions addressing water purveyor concerns relating to the entire critical water supply service area (fulfilling requirements of WAC 248-56-710 and 248-56-720 respectively), or

(b) A single plan covering all affected public water systems and areawide concerns within the external critical water supply service area boundaries (fulfilling requirements of both WAC 248-56-710 and 248-56-720).

(3) The coordinated water system plan shall provide for maximum integration and coordination of public water system facilities consistent with the protection and enhancement of the public health and well-being.

(4) The coordinated water system plan shall not be inconsistent with adopted county and city land use plans, ordinances, and/or growth policies addressing development within the critical water supply service area for at least five years beyond the date of establishment of external boundaries.

(5) If no land use plans, ordinances, or growth policies are in effect for all or a portion of the area within the critical water supply service area at the time the coordinated water system plan is being prepared, the coordinated water system plan shall be based upon the best planning data available from the appropriate local planning agency(ies).

(6) In critical water supply service areas where only one public water system exists, the coordinated water system plan shall consist of the water system plan for the water system. (See WAC 248-54-580 and 248-56-710.)

[Statutory Authority: RCW 43.70.040. 91-02-049 (Order 121), recodified as § 246-293-220, filed 12/27/90, effective 1/31/91. Statutory Authority: Chapter 70.116 RCW. 78-07-048 (Order 1309), § 248-56-700, filed 6/28/78.]

WAC 246-293-230 Coordinated water system plan—Water system plan. (1) Each purveyor within the external critical water supply service area boundaries shall be responsible for completion of a water system plan for the purveyor's future service area, including provisions of WAC 248-56-730, if such a plan has not already been approved, with the following exception:

(a) Nonmunicipally owned public water systems shall be exempt from the planning requirements (except for the establishment of service area boundaries pursuant to WAC 248-56-730) if they:

(i) Were in existence as of September 21, 1977; and

(ii) Have no plans for water service beyond their existing service area; and

(iii) Meet minimum state board of health requirements (chapter 248-54 WAC).

Note: If the county legislative authority permits a change in development that will increase the demand for water service of such a system beyond the existing system's ability to provide minimum water service, the purveyor shall develop a water system plan in accordance with this section.

(2) Each purveyors' water system plan shall be updated at the time the coordinated water system plan is prepared, which will eliminate the necessity of updating the water system plan prior to the mandatory five year update of the coordinated water system plan.

(3) The content of a water system plan shall be consistent with WAC 248-54-580 and shall comply with guidelines* which may be obtained from the department. These guidelines have been compiled to further assist in meeting the purpose of this chapter, and address three levels of planning requirements varying in detail, based upon the size of the public water system.

[Statutory Authority: RCW 43.70.040. 91-02-049 (Order 121), recodified as § 246-293-230, filed 12/27/90, effective 1/31/91. Statutory Authority: Chapter 70.116 RCW. 78-07-048 (Order 1309), § 248-56-710, filed 6/28/78.]

WAC 246-293-240 Coordinated water system plan—Supplementary provisions. (1) All water purveyors within the external critical water supply service area boundaries (with the exception of the systems specifically exempted in WAC 248-56-710(1)) shall be notified and asked to participate in the development of the supplementary provisions.

(2) The supplementary provisions shall address areawide water system concerns relating to the entire critical water supply service area. The content of the supplementary provisions shall comply with guidelines* which may be obtained from the department.

The supplementary provisions shall include, but not be limited to:

(a) Assessment of related, adopted plans,

(b) Identification of future service areas and service area agreements (WAC 248-56-730),

(c) Minimum areawide water system design standards, including fireflow performance standards,

(d) Procedures for authorizing new water systems in the critical water supply service area,

(e) Assessment of potential joint-use or shared water system facilities and/or management programs.

*Copies of DSHS guidelines entitled, "Plan contents guidelines" may be obtained without charge from the Department of Social and Health Services, Water Supply and Waste Section, Mail Stop LD-11, Olympia, Washington 98504.

[Statutory Authority: RCW 43.70.040. 91-02-049 (Order 121), recodified as § 246-293-240, filed 12/27/90, effective 1/31/91. Statutory Authority: Chapter 70.116 RCW. 78-07-048 (Order 1309), § 248-56-720, filed 6/28/78.]

WAC 246-293-250 Service area agreements—Requirement. (1) The service area boundaries of public water systems within the critical water supply service area shall be determined by written agreement among the respective existing purveyors and approved by the appropriate legislative authority(ies).

(2) Future service area agreements shall be incorporated into the coordinated water system plan as provided for in the guidelines identified in WAC 248-56-720.

(3) Future service area boundaries of public water systems shall be determined by existing purveyors. Criteria used in the establishment of future service areas should include, but not be limited to: Topography, readiness and ability to provide water, local franchise areas, legal water system boundaries, city limits, future population, land use projections, and sewer service areas.

(4) All future service areas shall not be inconsistent with adopted land use plans, ordinances, and growth policies of cities, towns, and counties, located within the future service area boundaries.

(5) Failure of the legislative authority(ies) to file with the department objections to service area agreements within 60 days of receipt of the agreement shall indicate automatic approval.

(6) If no service area boundary agreement has been established after a conscientious effort by the purveyors within one year of establishment of the external critical water supply service area boundaries, or if the legislative authority(ies) has filed with the department objections in writing, the department shall hold a public hearing.

(7) If a public hearing is required for the establishment of service areas the following procedures shall apply:

(a) The department shall provide notice of the hearing by certified mail to:

(i) Each purveyor providing service in the critical water supply service area,

(ii) Each county legislative authority having jurisdiction in the area, and

(iii) The public pursuant to chapter 65.16 RCW.

(b) The hearing may be continued from time to time.

(c) At the termination of the public hearing, the department may restrict the expansion of service of any purveyor within the external critical water supply service area boundaries if the department finds such restriction necessary to provide the greatest protection of the public health and well-being. (Individual retail or direct service connections shall not be considered an expansion.)

[Statutory Authority: RCW 43.70.040. 91-02-049 (Order 121), recodified as § 246-293-250, filed 12/27/90, effective 1/31/91. Statutory Authority: Chapter 70.116 RCW. 78-07-048 (Order 1309), § 248-56-730, filed 6/28/78.]

WAC 246-293-260 Coordinated water system plan—Procedures (water utility coordinating committee). (1) Following establishment of external critical water supply service area boundaries, the water utility coordinating committee shall be responsible for the development of a coordinated water system plan.

(2) No later than two months after establishment of the external critical water supply service area boundary the water utility coordinating committee shall meet for the purpose of formulating arrangements for:

(a) Preparation of the coordinated water system plan, and

(b) Public involvement.

(3) The water utility coordinating committee shall meet as necessary in order to:

(a) Collect and assemble water system plans,

(b) Provide input and direction for the preparation of the supplementary provisions,

(c) Serve as a forum for developing and/or negotiating future service area agreements (WAC 248-56-730),

(d) Accomplish other related business as determined by the committee.

(4) Prior to submittal of the coordinated water system plan to the county legislative authority(ies) for review, the water utility coordinating committee shall:

(a) Prepare written comments on the plan for the benefit of the reviewing authority(ies),

(b) Conduct at least one public informational meeting for the purpose of soliciting public input,

(c) Evaluate and respond to comments received at the hearing(s).

[Statutory Authority: RCW 43.70.040. 91-02-049 (Order 121), recodified as § 246-293-260, filed 12/27/90, effective 1/31/91. Statutory Authority: Chapter 70.116 RCW. 78-07-048 (Order 1309), § 248-56-740, filed 6/28/78.]

WAC 246-293-270 Coordinated water system plan—Effect. (1) All purveyors constructing or proposing to construct public water system facilities within the area covered by the coordinated water system plan shall comply with the plan.

(2) At any time after two years of establishment of the external critical water supply service area boundaries, the department may deny proposals to establish or to expand any public water system within a critical water supply service area for which there is not an approved coordinated water system plan. (Individual retail or direct service connections shall not be considered an expansion.) (See WAC 248-56-620 for provisions pertaining to new public water systems in the interim two years.)

[Statutory Authority: RCW 43.70.040. 91-02-049 (Order 121), recodified as § 246-293-270, filed 12/27/90, effective 1/31/91. Statutory Authority: Chapter 70.116 RCW. 78-07-048 (Order 1309), § 248-56-750, filed 6/28/78.]

WAC 246-293-280 Coordinated water system plan—Update. (1) The coordinated water system plan shall be reviewed and updated by the water utility coordinating committee at a minimum of every five years or sooner, if the water utility coordinating committee feels it is necessary, in accordance with both the provisions of WAC 248-54-580 and this section.

(2) Changes in the coordinated water system plan shall be accomplished in accordance with procedures for developing a coordinated water system plan (WAC 248-56-740). If no changes are necessary, the water utility coordinating committee shall submit to the department a statement verifying that the coordinated water system plan is still current.

(3) If the external critical water supply service area boundaries are altered by the county legislative authority(ies) pursuant to WAC 248-54-630, the coordinated water system plan shall be updated as provided for in WAC 248-56-630.

[Statutory Authority: RCW 43.70.040. 91-02-049 (Order 121), recodified as § 246-293-280, filed 12/27/90, effective 1/31/91. Statutory Authority: Chapter 70.116 RCW. 78-07-048 (Order 1309), § 248-56-760, filed 6/28/78.]

WAC 246-293-290 Coordinated water system plan—Local review. (1) Prior to submission of a coordinated water system plan to the department for approval, the plan shall be

reviewed by the county legislative authority(ies) in the county(ies) in which the critical water supply service area is located. County review of the coordinated water system plan shall include at least one public hearing.

(2) If no comments have been received from the county legislative authority(ies) within sixty days of receipt of the coordinated water system plan, the department may consider the plan for approval.

(3) If within sixty days of receipt of the coordinated water system plan, the county legislative authority(ies) find any segment of the plan to be inconsistent with adopted land use plans, shorelines master programs, the following shall occur:

(a) The county legislative authority(ies) shall submit written description of their determination and justification supporting their determination prior to the end of the sixty day period to the department and all affected parties.

(b) The county legislative authority(ies) shall make every effort to resolve any inconsistencies within sixty days of submittal of written justification.

(c) The department may approve those portions of the coordinated water system plan found not to be inconsistent with adopted plans and policies at any time after the initial determination by the county legislative authority(ies).

(d) If after the sixty day period established for resolution of inconsistencies an inconsistency still exists, the affected parties shall each present their final recommended alternative solution to the department. The department shall then review all alternative solutions and discuss its recommendations with the county(ies) and the water utility coordinating committee. If after two years of the declaration of the critical water supply service area the inconsistencies persist, the department may deny proposals to establish or to expand any public water system facilities which affect that portion of the critical water supply service area being contested.

[Statutory Authority: RCW 43.70.040. 91-02-049 (Order 121), recodified as § 246-293-290, filed 12/27/90, effective 1/31/91. Statutory Authority: Chapter 70.116 RCW. 78-07-048 (Order 1309), § 248-56-800, filed 6/28/78.]

WAC 246-293-300 Coordinated water system plan—Department approval. (1) A coordinated water system plan shall be submitted to the department for design approval within two years of the establishment of external critical water supply service area boundaries.

(a) In its review of the coordinated water system plan, the department shall ensure that every topic in the guidelines identified in WAC 248-56-720 has been covered to the extent necessary based on the size and nature of the water system(s) and characteristics of the critical water supply service area.

(b) The department shall not approve those portions of a coordinated water system plan which fail to meet the requirements for future service area boundaries pursuant to WAC 248-56-730.

(2) The department shall either approve the coordinated water system plan, or respond within 60 days from the date the plan is received.

[Statutory Authority: RCW 43.70.040. 91-02-049 (Order 121), recodified as § 246-293-300, filed 12/27/90, effective 1/31/91. Statutory Authority: Chapter 70.116 RCW. 78-07-048 (Order 1309), § 248-56-810, filed 6/28/78.]

PART II. RESOLUTION OF SERVICE AREA CONFLICTS

WAC 246-293-401 Purpose. The purpose of this chapter is to provide a process for resolving service area conflicts which arise from implementation of the Public Water System Coordination Act, chapter 70.116 RCW, and its procedural regulations, chapter 248-56 WAC.

[Statutory Authority: RCW 43.70.040. 91-02-049 (Order 121), recodified as § 246-293-401, filed 12/27/90, effective 1/31/91. Statutory Authority: RCW 74.116.070 [70.116.070]. 83-01-015 (Order 1919), § 248-59-005, filed 12/6/82.]

WAC 246-293-420 Public hearing. (1) If no service area boundary agreement has been established after a conscientious effort by existing water purveyors within one year of establishment of external critical water supply service area boundaries, or if the legislative authority or authorities have filed written objections with the department, the water supply and waste section of the department of social and health services (DSHS) shall work with the affected parties in an informal manner in order to reach an agreement.

(2) If, in the judgment of the water supply and waste section of DSHS, informal negotiations with the affected parties fail to make progress toward reaching an agreement, the water supply and waste section of DSHS shall hold a public hearing to determine its course of action.

(3) The water supply and waste section of DSHS shall provide at least thirty days' notice of the public hearing; thus, giving the affected parties a final opportunity to agree upon service area boundaries prior to the public hearing.

(4) Notice of the public hearing shall be mailed by certified mail to:

(a) Each purveyor providing service in the area of conflict;

(b) Each legislative authority having jurisdiction in the area; and

(c) The public pursuant to chapter 65.16 RCW.

[Statutory Authority: RCW 43.70.040. 91-02-049 (Order 121), recodified as § 246-293-420, filed 12/27/90, effective 1/31/91. Statutory Authority: RCW 74.116.070 [70.116.070]. 83-01-015 (Order 1919), § 248-59-010, filed 12/6/82.]

WAC 246-293-430 Initial decision. (1) The public hearing may be continued from time to time if good cause can be shown for such a continuance.

(2) After conclusion of the hearing, the water supply and waste section of DSHS may decide to take no action or restrict any or all purveyors from carrying out improvements within the conflicting area. Affected parties shall be notified of the decision by certified mail. The decision shall be issued as a written report and include justification based upon:

(a) Compliance with DSHS regulations;

(b) A record of the hearing; and

(c) Criteria established in WAC 248-56-730.

[Statutory Authority: RCW 43.70.040. 91-02-049 (Order 121), recodified as § 246-293-430, filed 12/27/90, effective 1/31/91. Statutory Authority: RCW 74.116.070 [70.116.070]. 83-01-015 (Order 1919), § 248-59-020, filed 12/6/82.]

PART III. FIRE FLOW

WAC 246-293-601 Purpose. This chapter is promulgated pursuant to the authority granted in the Public Water System Coordination Act of 1977, chapter 70.116 RCW, for the purpose of establishing minimum performance standards related to fire protection, including provisions for their application and enforcement, and incorporating them into the design and construction of new and expanding public water systems.

[Statutory Authority: RCW 43.70.040. 91-02-049 (Order 121), recodified as § 246-293-601, filed 12/27/90, effective 1/31/91. Statutory Authority: RCW 70.116.080. 79-04-007 (Order 1378), § 248-57-010, filed 3/12/79.]

WAC 246-293-602 Scope. These standards and regulations shall apply to the following new and expanding public water systems:

(1) Those having more than 1,000 services. (See WAC 248-54-580.)

(2) Those with less than 1,000 services located within the boundaries of a critical water supply service area and subject to the requirement for a coordinated water system plan. (See WAC 248-54-580 and 248-56-700.)

Note: Public water systems in existence prior to September 21, 1977, which are owner operated and serve less than ten single family residences; serving no more than one industrial plant; or are nonmunicipally owned with no plans for water service beyond their existing service area are exempt from the planning requirement.

[Statutory Authority: RCW 43.70.040. 91-02-049 (Order 121), recodified as § 246-293-602, filed 12/27/90, effective 1/31/91. Statutory Authority: RCW 70.116.080. 79-04-007 (Order 1378), § 248-57-200, filed 3/12/79.]

WAC 246-293-610 Definitions. (1) "Public water system" - Any system or water supply intended or used for human consumption or other domestic uses including, but not limited to, source, treatment, storage, transmission and distribution facilities where water is furnished to any community, number of individuals, or is made available to the public for human consumption or domestic use. This definition shall exclude any water system serving one single family residence, water systems existing prior to September 21, 1977, which are owner operated and serve less than ten single family residences, and water systems serving no more than one industrial plant.

(2) "Expanding public water systems" - Those public water systems installing additions, extensions, changes, or alterations to their existing source, transmission, storage, or distribution facilities which will enable the system to increase in size its existing service area. New individual retail or direct service connections onto an existing distribution system shall not be considered an expansion of the public water system.

(3) "Department" - The Washington state department of social and health services.

(4) "Critical water supply service area" - A geographical area designated by the department or county legislative authority characterized by public water system problems related to inadequate water quality, unreliable service, and/or lack of coordinated water system planning. It may be further characterized by a proliferation of small, inadequate water systems, or by water supply problems which threaten the present or future water quality or reliability of service in such a manner that efficient and orderly development may best be achieved through coordinated planning by public water systems in the area in accordance with chapter 248-56 WAC.

(5) "Fire flow" - The rate of water delivery needed for the purpose of fighting fires in addition to requirements for normal domestic maximum instantaneous demand as referenced in guidelines published by the department entitled "Design standards for public water supplies."

(6) "Local fire protection authority" - The fire district, city, town, or county directly responsible for the fire protection within a specified geographical area.

(7) "Water system plan" - A document identifying present and future water system needs and establishing a program for meeting those needs in the most efficient manner possible, and consistent with other relevant plans and policies affecting the area in which the system is located. (See WAC 248-54-580, 248-56-710 and 248-56-720, and the plan content guidelines for a detailed description of water system plans.)

(8) "Existing service area" - A specific area within which direct service or retail service connections to customers of a public water system are currently available.

(9) "Future service area" - A specific area for which water service is planned by a public water system as determined by written agreement between purveyors. (See WAC 248-56-730.)

(10) "Planning jurisdiction" - The city, town, county or other entity acting as the responsible agency for preparation and adoption of land use plans, policies or standards affecting development.

(11) "Development classifications" - Specific geographical areas within the existing and future service area of a public water system, identified for the purpose of determining the appropriate level of fire protection.

[Statutory Authority: RCW 43.70.040. 91-02-049 (Order 121), recodified as § 246-293-610, filed 12/27/90, effective 1/31/91. Statutory Authority: RCW 70.116.080. 79-04-007 (Order 1378), § 248-57-100, filed 3/12/79.]

WAC 246-293-620 Administration. (1) The department shall administer these regulations through its ongoing review and approval of water system plans and engineering reports as provided for in WAC 248-54-580, 248-54-590, and 248-56-810.

(2) In the event that plans and specifications for water system improvements are submitted to the department for approval under WAC 248-54-600 and the design of the proposed improvements is inconsistent with development classifications identified in the water system plan, (see WAC 248-57-400) the department shall not approve the plans and specifications.

(3) Plans and specifications for water system improvements (see WAC 248-54-600) proposed within those cities, towns, or counties which operate under local fire flow standards shall include written confirmation that they meet the requirements of adopted local standards from the authority administrating those standards. (See WAC 248-57-900.)

[Statutory Authority: RCW 43.70.040. 91-02-049 (Order 121), recodified as § 246-293-620, filed 12/27/90, effective 1/31/91. Statutory Authority: RCW 70.116.080. 79-04-007 (Order 1378), § 248-57-300, filed 3/12/79.]

WAC 246-293-630 Application. (1) Water system plans prepared by those public water systems identified in WAC 248-57-200 shall include a section in their plans addressing fire flow, hydrant and system reliability standards in accordance with WAC 248-57-500, 248-57-600, and 248-57-700 respectively. The section shall include a map entitled development classifications consistent with the following:

(a) The map shall delineate the existing and future service area of the water system into the following categories:

(i) Rural - lot sizes greater than one acre (including parks, open space, agricultural lands, etc.)

(ii) Residential - lot sizes one acre or less, (including all single and multifamily structures less than 4000 square feet, and mobile home and recreational vehicle parks)

(iii) Commercial and multifamily residential structures with a floor area 4000 square feet or greater.

(iv) Industrial

(b) Assignment of the above categories shall be based upon:

(i) Existing development, and

(ii) Future development for a minimum of ten years as identified in proposed or adopted land use plans and policies applicable within the existing and future service area.

(c) The development classifications outlined in (a) above shall be determined by any method acceptable to the planning jurisdiction(s), provided that the criteria used is consistent within a given critical water supply service area.

(2) The water system plan shall identify and schedule improvements needed in order for the water system to be capable of supplying required fire flow for new and expanding public water systems consistent with these regulations.

[Statutory Authority: RCW 43.70.040. 91-02-049 (Order 121), recodified as § 246-293-630, filed 12/27/90, effective 1/31/91. Statutory Authority: RCW 70.116.080. 79-04-007 (Order 1378), § 248-57-400, filed 3/12/79.]

WAC 246-293-640 Minimum standards for fire flow. (1) City, town, or county legislative authority shall set minimum fire flows where local standards are adopted under WAC 248-57-900.

(2) Where local standards are not adopted under WAC 248-57-900, Table 1 shall identify minimum fire flows. Contact with the county and local fire protection authority shall be made before applying these standards in a water system plan or to design of individual development.

TABLE 1
MINIMUM FIRE FLOWS*

Development Classification	Minimum Fire Flow Requirement
(as described under WAC 248-57-400)	
Rural	None
Residential	500 gallons per minute for 30 minutes
Commercial and multifamily structures greater than 4000 sq. ft.	750 gallons per minute for 60 minutes**
Industrial	1000 gallons per minute for 60 minutes**

* Minium flows are in addition to requirements for normal domestic maximum use.

** Commercial and industrial buildings may be subject to higher flow requirements when evaluated on an individual basis by the local fire protection authority.

Note: Minimum standards in most cases require less flow than categories in the guidelines published by the Insurance Services Office (Municipal Survey Service, 160 Water Street, New York, New York 10038) and therefore may not result in lower insurance rates.

[Statutory Authority: RCW 43.70.040. 91-02-049 (Order 121), recodified as § 246-293-640, filed 12/27/90, effective 1/31/91. Statutory Authority: Chapter 70.116 RCW. 89-16-065 (Order 2840), § 248-57-500, filed 7/31/89, effective 8/31/89. Statutory Authority: RCW 70.116.080. 79-04-007 (Order 1378), § 248-57-500, filed 3/12/79.]

WAC 246-293-650 Minimum standards for fire hydrants. (1) In those areas where minimum fire flow requirements must be met, fire hydrants shall be provided in accordance with WAC 248-57-600. If phased installation of water facilities are approved by the department, fire hydrants do not need to be installed until source, storage, and transmission capacity needed to meet the minimum flow requirements are operational: Provided, That in such instances a "T" shall be installed every 900 feet where fire hydrants will be located.

(2) Fire hydrants shall be located at roadway intersections wherever possible and the distance between them shall be no further than 900 feet.

(3) All fire hydrants shall conform to American Water Works Association specifications for dry barrel fire hydrants. Each hydrant shall have at least two hose connections of 2 1/2" diameter each and one pumper connection. All connections must have national standard threads or other connection devices consistent with local fire protection authority requirements.

(4) Fire hydrants shall be installed plumb and be set to the finished grade. The bottom of the lowest outlet of the hydrant shall be no less than eighteen inches above the grade. There shall be thirty-six inches of clear area about the hydrant for operation of a hydrant wrench on the outlets and on the control valve. The pumper port shall face the most likely route of approach of the fire truck as determined by the local fire protection authority.

(5) Fire hydrants shall be located so as to be accessible by fire engines and not be obstructed by any structure or vegetation or have the visibility impaired for a distance of fifty feet in the direction of vehicular approach to the hydrant. Fire hydrants subject to vehicle damage (e.g., such as those located in parking lots) shall be adequately protected.

(6) Provisions shall be made to drain fire hydrant barrels to below the depth of maximum frost penetration.

(7) Out of service fire hydrants shall be repaired as soon as possible.

(8) Public water systems are encouraged to enter into contracts with local fire protection authorities to insure proper maintenance of fire hydrants.

[Statutory Authority: RCW 43.70.040. 91-02-049 (Order 121), recodified as § 246-293-650, filed 12/27/90, effective 1/31/91. Statutory Authority: RCW 70.116.080. 79-04-007 (Order 1378), § 248-57-600, filed 3/12/79.]

WAC 246-293-660 Minimum standards for system reliability. (1) The public water system shall be capable of supplying minimum fire flows either by gravity, or under the following conditions where fire flows are supplied by pumping:

(a) The largest pump out of service at any pumping level,

(b) The highest capacity treatment unit out of service, while maintaining minimum acceptable standards of water quality.

(c) A power outage in effect, unless the appropriate power utility(ies) records indicate a low incidence of electrical outage, defined as follows:

(i) Outages shall average three or less per year based on data for the three previous years with no more than six outages in a single year. Power must be lost for a minimum of thirty minutes in order to qualify as an "outage."

(ii) Outage duration shall average less than four hours based on data for the three previous years. Not more than one outage during the three previous year period shall have exceeded eight hours.

(2) In assessing system reliability, the department shall also give consideration to potential reliability hazards such as reservoir repair or cleaning and/or lack of parallel water transmission lines.

[Statutory Authority: RCW 43.70.040. 91-02-049 (Order 121), recodified as § 246-293-660, filed 12/27/90, effective 1/31/91. Statutory Authority: RCW 70.116.080. 79-04-007 (Order 1378), § 248-57-700, filed 3/12/79.]

WAC 246-293-670 Alternate methods. Fire protection may be provided by means other than those discussed in these regulations, provided that such alternate methods are fully documented in the water system plan and approved by both the local fire protection authority and the department.

[Statutory Authority: RCW 43.70.040. 91-02-049 (Order 121), recodified as § 246-293-670, filed 12/27/90, effective 1/31/91. Statutory Authority: RCW 70.116.080. 79-04-007 (Order 1378), § 248-57-800, filed 3/12/79.]

WAC 246-293-680 Local standards. (1) Where standards in these regulations do not fully meet the fire protection needs of a city, town or county, the appropriate city, town or county legislative authority may promulgate fire flow and system reliability performance standards applicable within their respective jurisdiction. Such standards shall be fully documented and provide at least equal performance and protection as the minimum requirements contained in these regulations.

(2) Standards established by local jurisdictions shall be submitted to the department for review, and approval if they at least meet the minimum level of protection required by these regulations.

(3) The city, town, or county which adopts local fire flow or system reliability standards shall be responsible for administering those standards.

[Statutory Authority: RCW 43.70.040. 91-02-049 (Order 121), recodified as § 246-293-680, filed 12/27/90, effective 1/31/91. Statutory Authority: RCW 70.116.080. 79-04-007 (Order 1378), § 248-57-900, filed 3/12/79.]

WAC 246-293-690 Severability. If any provision of the chapter or its application to any person or circumstance is held invalid, the remainder of this chapter or the application of the provision to other persons or circumstances, shall not be affected.

[Statutory Authority: RCW 43.70.040. 91-02-049 (Order 121), recodified as § 246-293-690, filed 12/27/90, effective 1/31/91. Statutory Authority: RCW 70.116.080. 79-04-007 (Order 1378), § 248-57-990, filed 3/12/79.]

Chapter 246-294 WAC
DRINKING WATER OPERATING PERMITS

WAC

246-294-001	Purpose.
246-294-010	Definitions.
246-294-020	Applicability.
246-294-030	Application and issuance of operating permits.
246-294-040	Operating permit categories.
246-294-050	Permit issuance.
246-294-060	Transfer of ownership.
246-294-070	Fees.
246-294-080	Public notification.
246-294-090	Enforcement.
246-294-100	Severability.

WAC 246-294-001 Purpose. This chapter implements chapter 70.119A RCW and sets operating permit requirements to help assure Group A water systems provide safe and reliable drinking water to the public consistent with chapter 246-290 WAC, state board of health drinking water regulations and chapter 246-292 WAC, water works operator certification regulations.

[Statutory Authority: Chapter 70.119A RCW. 04-06-047, § 246-294-001, filed 3/1/04, effective 4/1/04; 93-03-047 (Order 325), § 246-294-001, filed 1/14/93, effective 2/14/93.]

WAC 246-294-010 Definitions. Abbreviations:

EPA - Environmental Protection Agency
MCL - maximum contaminant level
NTNC - nontransient noncommunity
SMA - satellite management agency
SSNC - state significant noncomplier
TNC - transient noncommunity
VOC - volatile organic chemical
WFI - water facilities inventory

"Adequacy" means an assessment, based upon evaluation of the department's records, of a water system's current ability to provide safe and reliable drinking water in accordance with applicable drinking water statutes and regulations.

"Community water system" means any Group A water system:

With fifteen or more services used by residents for one hundred eighty or more days within a calendar year, regardless of the number of people; or

Regularly serving twenty-five or more residents for one hundred eighty or more days within the calendar year, regardless of the number of services.

"Department" means the Washington state department of health.

"Drinking water regulations" means the provisions of chapter 70.119A RCW, chapter 246-290 WAC, state board of health drinking water regulations and chapter 246-292 WAC, water works operator certification regulations, that help assure Group A public water systems provide safe and reliable drinking water.

"Group A water systems" are defined as community and noncommunity water systems.

(a) Community water system means any Group A water system providing service to fifteen or more service connections used by year-round residents for one hundred eighty or more days within a calendar year, regardless of the number of

people, or regularly serving at least twenty-five year-round (i.e., more than one hundred eighty days per year) residents.

(b) Noncommunity water system means a Group A water system that is not a community water system. Noncommunity water systems are further defined as:

(i) Nontransient (NTNC) water systems that provide service opportunity to twenty-five or more of the same nonresidential people for one hundred eighty or more days within a calendar year.

(ii) Transient (TNC) water systems that serve:

(A) Twenty-five or more different people each day for sixty or more days within a calendar year;

(B) Twenty-five or more of the same people each day for sixty or more days, but less than one hundred eighty days in a calendar year; or

(C) One thousand or more people for two or more consecutive days within a calendar year.

"Maximum contaminant level (MCL)" means the maximum permissible level of a contaminant in water the purveyor delivers to any public water system user, measured at the locations identified under WAC 246-290-300, Table 3.

"Nonresident" means a person having access to drinking water from a public water system who lives elsewhere. Examples include travelers, transients, employees, students, etc.

"Owner" means any agency, subdivision of the state, municipal corporation, firm, company, mutual or cooperative association, institution, partnership, or person or any other entity, that holds as property, a public water system.

"Public water system" means any system, providing water for human consumption through pipes or other constructed conveyances, excluding a system serving only one single-family residence and a system with four or fewer connections all of which serve residences on the same farm. The term includes:

(a) Collection, treatment, storage, and/or distribution facilities under control of the purveyor and used primarily in connection with the system.

(b) Collection or pretreatment storage facilities not under control of the purveyor, but primarily used in connection with the system.

"Resident" means an individual living in a dwelling unit served by a public water system.

"Satellite management agency (SMA)" means an individual, purveyor, or entity that is approved by the department in accordance with chapter 246-295 WAC to own or operate more than one public water system on a regional or countywide basis, without the necessity for a physical connection between such systems.

"Service connection" means a connection to a public water system designed to provide potable water to a single-family residence, or other residential or nonresidential population. When the connection provides water to a residential population without clearly defined single-family residences, the following formulas shall be used in determining the number of services to be included as residential connections on the WFI form:

• Divide the average population served each day by two and one-half; or

• Using actual water use data, calculate the total ERU's represented by the service connection in accordance with department design guidance.

• In no case shall the calculated number of services be less than one.

"State significant noncomplier (SSNC)" means a system that is violating or has violated department rules, and violations may create, or have created an imminent or a significant risk to human health. Such violations include, but are not limited to, repeat violations of monitoring requirements, failure to address exceedance of permissible levels of regulated contaminants, failure to comply with treatment technique standards or requirements, failure to comply with water works operator certification requirements, or failure to submit to a sanitary survey.

"Water facilities inventory (WFI)" means the department form summarizing each public water system's characteristics.

[Statutory Authority: Chapter 70.119A RCW. 04-06-047, § 246-294-010, filed 3/1/04, effective 4/1/04; 93-03-047 (Order 325), § 246-294-010, filed 1/14/93, effective 2/14/93.]

WAC 246-294-020 Applicability. Owners of all Group A water systems shall obtain an annual operating permit from the department for each system owned. The operating permit shall be valid until the next renewal date in accordance with WAC 246-294-050. Any change in ownership of the permitted system shall require a new permit in accordance with WAC 246-294-060.

[Statutory Authority: Chapter 70.119A RCW. 04-06-047, § 246-294-020, filed 3/1/04, effective 4/1/04; 93-03-047 (Order 325), § 246-294-020, filed 1/14/93, effective 2/14/93.]

WAC 246-294-030 Application and issuance of operating permits. (1) No person may operate and no owner shall permit the operation of a Group A water system unless the owner annually submits an application along with the required fee to the department and the department has issued an operating permit to the system owner. Any owner operating a system may continue to operate until the department takes final action on granting or denying the operating permit, in accordance with WAC 246-294-050.

(2) The department shall mail an application to water systems annually using a schedule that is based on the size and type of water system.

(3) In addition to the regularly scheduled issuance of annual operating permits, new or revised operating permits shall be required when:

(a) The owner of a new Group A system receives all required department approvals relating to water system operation (see WAC 246-294-030(4)); or

(b) Ownership of a Group A system changes (see WAC 246-294-060).

(4) The department may also issue a revised operating permit when there is a change in a systems compliance that necessitates a change to a different permit category.

(5) New Group A systems shall be sent operating permit applications at the time construction documents are submitted to the department for approval. The deadline for submitting the completed application and full payment to the department shall be the same date as:

(a) The *Construction Completion Report* required by WAC 246-290-120(5); or

(b) The existing system as-built approval required by WAC 246-290-140.

(6) Initial and renewal applications shall be based on information from the most recent WFIs on file with the department, and sent to owners on an annual basis. In the case of a SMA, the department will send a complete list of systems owned, along with the corresponding system identification numbers. The SMA shall verify the information, make corrections or additions and then return the list with the application.

(7) Upon receipt of the application, the owner or other legally authorized person shall:

(a) Complete portions of the form which need completing;

(b) Ensure that information on the form is accurate;

(c) Sign the form; and

(d) Return the application to the department within seventy days of the department's mailing date, accompanied by the applicable fee.

(8) The applicable fee shall be in the form of a check or money order made payable to the "Department of Health" or successor organization as designated by the department and mailed in accordance with the directions on the application.

(9) Systems which do not return operating permit applications along with the required fee by the deadline specified on the notice shall:

(a) Not be issued an operating permit; and

(b) Be subject to the enforcement provisions in WAC 246-294-090.

(10) An additional charge of ten percent or twenty-five dollars, whichever is greater, shall be added to the applicable fee listed in WAC 246-294-070 if the owner fails to return the completed application with applicable fee to the department within seventy days of the department's mailing date.

(11) The department shall review each submitted application. Any changes made on the application by the applicant shall be evaluated by the department and may result in an update of the system's WFI form, which would be reflected on the next renewal application.

(12) If after issuing an operating permit, the department determines that the permit holder has made false statements, the department may, in addition to taking other actions provided by law, revise both current and previously granted permit fee determinations and charge the owner accordingly.

(13) If the department discovers that an owner has been operating a system without an operating permit and such system is covered by the requirements of this chapter, the department may charge the owner an operating permit fee plus permit fees owed for each year, including late fees, since the effective date of this chapter.

[Statutory Authority: Chapter 70.119A RCW. 04-06-047, § 246-294-030, filed 3/1/04, effective 4/1/04; 93-03-047 (Order 325), § 246-294-030, filed 1/14/93, effective 2/14/93.]

WAC 246-294-040 Operating permit categories. (1) The department shall evaluate and place each system into one of the categories in subsection (2) of this section. Each permit shall clearly identify the category into which the system is placed.

(2) The department will use the criteria from drinking water regulations to evaluate systems and place them into the following operating permit categories:

(a) Category green. This category represents systems that are in substantial compliance with drinking water regulations. The department considers systems in this category as adequate for existing uses and adding new service connections up to the number of approved service connections.

(b) Category yellow. This category represents systems that are substantially in compliance with drinking water regulations, except that the system:

(i) Has been notified of the water system planning provisions of WAC 246-290-100 and has failed to satisfy the requirements; and/or

(ii) Is a state significant noncomplier that has signed a compliance agreement with the department to resolve the violations and is acting in accordance with the compliance agreement.

The department considers systems in the yellow category as adequate for existing uses and new service connections up to the number of approved service connections unless otherwise limited by a compliance agreement.

(c) Category blue. This category represents systems that are substantially in compliance with drinking water regulations except that the system:

(i) Does not meet the design approval requirements of WAC 246-290-120 and 246-290-140; or

(ii) Has exceeded the number of department approved service connections.

The department considers systems in this category as adequate for existing uses but are not considered adequate for adding new service connections.

(d) Category red. This category represents systems that are substantially out of compliance with drinking water regulations. The department will place a system in this category if it is:

(i) A state significant noncomplier and has not signed a compliance agreement with the department or has signed a compliance agreement but is not acting in accordance with the compliance agreement; or

(ii) In violation of a departmental order; or

(iii) Under a departmental order for violations that pose an imminent threat to public health.

The department considers systems in this category inadequate for existing uses and for additional service connections.

[Statutory Authority: Chapter 70.119A RCW. 04-06-047, § 246-294-040, filed 3/1/04, effective 4/1/04; 93-03-047 (Order 325), § 246-294-040, filed 1/14/93, effective 2/14/93.]

WAC 246-294-050 Permit issuance. (1) The department shall grant or deny the operating permit within one hundred twenty days of receiving a completed application and full payment.

(2) Issuance of an operating permit means that the owner may operate the permitted system until the date specified on the permit unless protection of the public health, safety, and welfare requires immediate response or the imposition of conditions.

(3) At the time of permit issuance, the department may impose permit conditions and compliance schedules that the department determines are necessary to ensure that the sys-

tem will provide safe and reliable drinking water, consistent with the provisions of chapters 246-290 and 246-292 WAC.

(4) The department may modify an operating permit at any time based on review of the evaluation criteria in WAC 246-294-040(2). If the department modifies a permit, the department will send the owner a revised permit with the same expiration date. The department will also notify the appropriate local jurisdiction of the change in status.

(5) The department may revoke an operating permit or deny an operating permit application if the department determines that the system operation constitutes or may constitute a public health hazard to consumers.

(6) When the department takes action to deny, condition, modify, or revoke an operating permit, the department shall follow the steps outlined in RCW 43.70.115.

(7) An operating permit applicant may file an appeal under chapter 34.05 RCW, if the department denies, conditions, modifies, or revokes the operating permit. To appeal a department action, the owner shall submit to the department a written appeal within twenty-eight days of receiving the adverse notice.

The appeal shall state:

(a) The issue or issues and law involved; and

(b) The basis for appealing the department's decision.

(8) Any owner that requests a hearing under chapter 34.05 RCW may continue to operate the system until the department issues a final departmental decision, unless the department determines protection of the public health, safety, and welfare requires summary action.

[Statutory Authority: Chapter 70.119A RCW. 04-06-047, § 246-294-050, filed 3/1/04, effective 4/1/04; 93-03-047 (Order 325), § 246-294-050, filed 1/14/93, effective 2/14/93.]

WAC 246-294-060 Transfer of ownership. (1) A prospective new owner of a Group A water system may not take possession of the system without first obtaining a new operating permit.

(2) The department shall send an application to the prospective new owner when the department is notified of transfer of ownership in accordance with WAC 246-290-035(2). The new owner shall proceed with the permit process under WAC 246-294-030.

(3) The department shall not charge a fee for a new permit resulting from a change in ownership. The permit shall be effective from the date of issuance by the department until the next scheduled permit renewal date, at which time the department will charge a renewal fee.

(4) This section applies to the prospective owner, and the requirements of WAC 246-290-035(2) apply to the owner transferring the system.

[Statutory Authority: Chapter 70.119A RCW. 04-06-047, § 246-294-060, filed 3/1/04, effective 4/1/04; 93-03-047 (Order 325), § 246-294-060, filed 1/14/93, effective 2/14/93.]

WAC 246-294-070 Fees. (1) The fees for Group A water system operating permits are authorized under RCW 70.119A.110 and are listed in Table 2.

TABLE 2
OPERATING PERMIT FEES

Classification	Fee
0 - 14 services	None
15 - 49 services	$25.00 per year
50 - 3,333 services	$1.50 per service per year
3,334 - 53,333 services	$4,999.50 + .10 per service over 3,333 services per year
53,334 or more services	$10,000.00 per year
Satellite Management Agency (based on total services in all systems owned by SMA)	$1.00 per service per year or the fee from the appropriate category above, whichever is less
Late charge	Additional 10% of applicable charge stated above or $25.00, whichever is greater

(2) If systems serve both resident and nonresident populations, the department shall determine the permit fee category by adding the number of services and an equivalent for the NTNC and TNC nonresident population served as calculated in subsection (3) of this section.

(3) For NTNC and TNC systems, owners shall pay the fee in Table 2 based on equivalent number of services. Population information used in calculating equivalent number of services shall come from the WFI. The department shall use the following formulas to determine equivalent number of services:

(a) For NTNC population, divide the average population served each day by two and one-half; and

(b) For TNC population, divide the average population served each day by twenty-five.

(4) Any county or SMA assuming ownership of a Group A water system, or court appointed receiver of a Group A water system is exempt from the operating permit fee for one year after the next renewal date.

[Statutory Authority: Chapter 70.119A RCW. 04-06-047, § 246-294-070, filed 3/1/04, effective 4/1/04; 93-03-047 (Order 325), § 246-294-070, filed 1/14/93, effective 2/14/93.]

WAC 246-294-080 Public notification. An owner issued a category red operating permit shall notify the water system users in accordance with WAC 246-290-71001, 246-290-71003, and 246-290-71004.

[Statutory Authority: Chapter 70.119A RCW. 04-06-047, § 246-294-080, filed 3/1/04, effective 4/1/04; 93-03-047 (Order 325), § 246-294-080, filed 1/14/93, effective 2/14/93.]

WAC 246-294-090 Enforcement. The department may initiate appropriate enforcement actions if an owner is out of compliance with these rules or any applicable drinking water regulations. These actions may include any one or combination of the following:

(1) Issuance of informal letters instructing or requiring appropriate corrective measures; or

(2) Issuance of a compliance agreement or schedule; or

(3) Issuance of departmental orders requiring any person to apply for an operating permit as required by these rules and RCW 70.119A.110 or to comply with applicable drinking water regulations imposed as part of an operating permit; or

(4) Issuance of civil penalties for up to five thousand dollars per day per violation for failure to comply with departmental orders issued in accordance with subsection (3) of this section; or

(5) Legal action by the attorney general or local prosecutor.

[Statutory Authority: Chapter 70.119A RCW. 04-06-047, § 246-294-090, filed 3/1/04, effective 4/1/04; 93-03-047 (Order 325), § 246-294-090, filed 1/14/93, effective 2/14/93.]

WAC 246-294-100 Severability. If any provision of this chapter or its application to any person or circumstances is held invalid, the remainder of this chapter, or the application of the provision to other persons or circumstances, shall not be affected.

[Statutory Authority: Chapter 70.119A RCW. 93-03-047 (Order 325), § 246-294-100, filed 1/14/93, effective 2/14/93.]

Chapter 246-295 WAC
SATELLITE SYSTEM MANAGEMENT AGENCIES

WAC

246-295-001	Purpose.
246-295-010	Definitions.
246-295-020	Applicability.
246-295-030	Potential satellite management agencies (SMAs).
246-295-040	SMA submittal and approval process.
246-295-050	SMA plan content for ownership.
246-295-060	SMA plan content for management and operation only.
246-295-070	Requests for water service.
246-295-080	Management and operations agreements.
246-295-090	Periodic review.
246-295-100	SMA compliance.
246-295-110	Special provisions.
246-295-120	Fees.
246-295-130	Severability.

WAC 246-295-001 Purpose. (1) The purpose of these rules is to:

(a) Establish criteria for approving satellite system management agencies hereafter referred to as satellite management agencies (SMAs) pursuant to RCW 70.116.134;

(b) Delineate the process organizations and/or individuals must follow to be considered an approved SMA; and

(c) Outline procedures for coordination between water users, purveyors, SMAs, local government and the department.

(2) This chapter is specifically designed to ensure:

(a) The enhancement of public health through the use of SMAs;

(b) SMAs are capable of providing high quality drinking water in a reliable manner and in a quantity suitable for intended use;

(c) SMAs are capable of meeting the requirements of the federal Safe Drinking Water Act, P.L. 93-523 and P.L. 99-339; and

(d) Uniformity in the SMAs determination and compliance processes.

(3) Other statutes relating to this chapter are:

(a) Chapter 43.20 RCW, State board of health;

(b) RCW 43.20B.020 Fees for services—Department of health and department of social and health services;

(c) Chapter 43.70 RCW, Department of health;

(d) Chapter 70.116 RCW, Public Water System Coordination Act of 1977;

(e) Chapter 70.119 RCW, Public water supply systems—Certification and regulation of operators; and

(f) Chapter 70.119A, Public water systems—Penalties and compliance.

[Statutory Authority: RCW 70.116.134. 94-18-108, § 246-295-001, filed 9/6/94, effective 10/7/94.]

WAC 246-295-010 Definitions. Abbreviations:

"IOU" - Investor owned utility;

"SMA" - Satellite management agency;

"UTC" - Utilities and transportation commission; and

"WSP" - Water system plan.

"Certified operator" means a person certified in accordance with chapter 246-292 WAC.

"Contract" means a written agreement between a SMA and a public water system identifying the responsibilities of system operation and management.

"Department" means the Washington state department of health.

"Investor owned utility" means a corporation, company, association, joint stock association, partnership and person, their lessees, trustees or receivers appointed by any court whatsoever, owning, controlling, operating or managing any public water system for hire.

"Public water system" means any system, excluding a system serving only one single-family residence and a system with four or fewer connections all of which serve residences on the same farm, providing piped water for human consumption, including any:

Collection, treatment, storage, or distribution facilities under control of the purveyor and used primarily in connection with such system; and

Collection or pretreatment storage facilities not under control of the purveyor primarily used in connection with such system.

"Purveyor" means an agency, subdivision of the state, municipal corporation, firm, company, mutual or cooperative association, institution, partnership, or person or other entity owning or operating a public water system. Purveyor also means the authorized agents of such entities.

"Satellite management agency (SMA)" means an individual, purveyor, or entity that is approved by the secretary to own or operate more than one public water system on a regional or county-wide basis, without the necessity for a physical connection between such systems.

"Satellite management and operation services" means all day-to-day responsibilities of a water system. Management responsibilities shall include planning and policy decision making. Operational responsibilities shall include normal day-to-day operations, preventative maintenance, water quality monitoring, troubleshooting, emergency response, response to complaints, public/press contact, and recordkeeping.

"Secretary" means the secretary of the department of health or their designee.

"Service area" means a specific area for which satellite management and operation services may be provided by a SMA.

"Service area policies" means pertinent policies that impact the provision of water and water system growth.

[Statutory Authority: RCW 70.116.134. 94-18-108, § 246-295-010, filed 9/6/94, effective 10/7/94.]

WAC 246-295-020 Applicability. The rules of this chapter shall apply to SMAs and all counties, and to public water system purveyors, individuals, or other entities requesting SMA approval.

[Statutory Authority: RCW 70.116.134. 94-18-108, § 246-295-020, filed 9/6/94, effective 10/7/94.]

WAC 246-295-030 Potential satellite management agencies (SMAs). (1) Pursuant to RCW 70.116.134(2), each county shall identify and submit a list of potential SMAs to the department by January 1, 1995, for areas within the county:

(a) Which are not within a designated future service area of any utility pursuant to the Water System Coordination Act; or

(b) Where an existing purveyor has agreed or where a legal determination has been made that an existing purveyor is unable or unwilling to provide service.

(2) After January 1, 1995, counties may submit names of additional potential SMAs to the department on an ongoing basis.

[Statutory Authority: RCW 70.116.134. 94-18-108, § 246-295-030, filed 9/6/94, effective 10/7/94.]

WAC 246-295-040 SMA submittal and approval process. (1) An individual, purveyor or other entity seeking approval as a SMA, shall:

(a) Submit a notice of intent to become an approved SMA to the department on a form provided by the department;

(b) Participate in a "presubmittal conference" to discuss the SMA plan content, and, if applicable, the water system plan;

(c) Submit a SMA application and plan which shall include all information required under WAC 246-295-050 or 246-295-060 at the level of detail agreed upon at the presubmittal conference.

(2) The department shall forward the SMA plan to affected counties for review and comment. To ensure consideration, the county must submit its comments to the department within sixty days.

(3) When all conditions listed in subsection (1) of this section have been completed, the secretary shall either approve or deny the proposed SMA based on the secretary's review and evaluation of information presented and comments received from the county.

(4) The secretary shall maintain a list of approved SMAs and make it available to counties, purveyors, individuals or other entities on request. A listing shall be distributed to each county at least annually and on approval of new SMAs by the secretary. The approved listing shall include a service area for each SMA and designate which SMAs are approved for:

(a) Ownership; and

(b) Management and operation only.

[Statutory Authority: RCW 70.116.134. 94-18-108, § 246-295-040, filed 9/6/94, effective 10/7/94.]

WAC 246-295-050 SMA plan content for ownership. The SMA plan shall address the following elements at a minimum in a manner acceptable to the department. A department guideline titled *Satellite Management Planning Handbook* is available to assist the potential SMA in adequately addressing these elements:

(1) SMA ownership, including at a minimum:

(a) A statement of intent to own public water systems;

(b) Current organizational structure of the SMA, legal authority, mailing address, responsible party, and contact person;

(c) Identification of existing public water systems the applicant currently owns, and/or manages and operates. The identification shall include the number of connections in each system, the department identification number and the system location.

(d) Documentation showing that at least one staff person has, at a minimum, three years of water utility ownership and/or management experience.

(2) SMA service area information, including at a minimum:

(a) A map of the SMA service area;

(b) A general written description of the SMA service area; and

(c) Future service area agreement(s) of systems owned by SMA if applicable.

(3) Service area policies/conditions of service where applicable, including at a minimum:

(a) Annexation policies consistent with local comprehensive plans;

(b) Ownership versus management and operation decision criteria;

(c) Policies related to new and existing public water systems, including the method of determining financial feasibility of adding new or existing systems to the SMA;

(d) Ordinances, resolutions and agreements related to the provision of drinking water;

(e) Service request process overview flowchart, including time frames; and

(f) A list of available services.

(4) System design standards for new and existing systems;

(5) Financial viability, including at a minimum:

(a) A written description of available revenue sources;

(b) A budget; and

(c) General financial policies.

(6) Operation and maintenance program, including at a minimum:

(a) Documentation that at least one staff person will, at a minimum, be certified at a water distribution manager 2 level or above and meet any additional department required certified operator requirements;

(b) Overall SMA routine and preventive maintenance program, including an emergency response plan;

(c) A copy of model contract for operation and maintenance services, if applicable; and

(d) Two copies of all applicable operations contracts in effect.

(7) Documentation from affected counties that the SMA plan is consistent with their plans and policies;

(8) Documentation that all Group A systems owned by the potential SMA on the date of request have obtained their operating permit and are not classified in the red operating permit category pursuant to chapter 246-294 WAC. If Group B systems are also owned by the potential SMA, provide documentation that such systems are in compliance with chapter 246-291 WAC. A special provision pursuant to WAC 246-295-110 may be utilized in the determination of compliance.

(9) Current water system plan(s) or department approved plan development schedule, if applicable.

[Statutory Authority: RCW 70.116.134. 94-18-108, § 246-295-050, filed 9/6/94, effective 10/7/94.]

WAC 246-295-060 SMA plan content for management and operation only. The SMA plan shall address the following elements at a minimum in a manner acceptable to the department. A department guideline titled *Satellite Management Planning Handbook* is available to assist purveyors, individuals or other entities in adequately addressing these elements:

(1) SMA ownership, including at a minimum:

(a) A statement of intent to manage and operate public water systems;

(b) Current organizational structure of SMA, legal authority, mailing address, responsible party, and contact person;

(c) Documentation showing that at least one staff person has, at a minimum, three years of water utility ownership and/or management experience; and

(d) Identification of existing public water systems the applicant currently operates. The identification must include the number of connections in each system, the department identification number and the system location.

(2) SMA service area information, including at a minimum:

(a) A map of the SMA service area; and

(b) A general written description of the SMA service area.

(3) Conditions of service, including at a minimum:

(a) Operation decision criteria;

(b) Service request process overview flowchart including time frames; and

(c) A list of available services.

(4) Operation and maintenance program, including at a minimum:

(a) Documentation that at least one staff person will, at a minimum, be certified at a water distribution manager 2 level or above and meet any additional department required certified operator requirements;

(b) Overall SMA routine and preventive maintenance program, including an emergency response plan;

(c) A copy of the model contract for operation and maintenance services; and

(d) Two copies of all applicable operations contracts in effect.

(5) Documentation that all Group A systems managed and operated by the potential SMA on the date of request have obtained their operating permit and are not classified in the red operating permit category pursuant to chapter 246-294 WAC. If Group B systems are also managed and operated by the potential SMA, provide documentation that such systems are in compliance with chapter 246-291 WAC. A special provision pursuant to WAC 246-295-110 may be utilized in the determination of compliance.

[Statutory Authority: RCW 70.116.134. 94-18-108, § 246-295-060, filed 9/6/94, effective 10/7/94.]

WAC 246-295-070 Requests for water service. The county or city agency responsible for determining water availability shall direct an individual or other entity proposing a new system or requesting water service to contact one or more approved SMAs designated for the service area where the new system is proposed. Such contact shall take place prior to construction of a new public water system and shall be documented in writing to the appropriate county or city.

[Statutory Authority: RCW 70.116.134. 94-18-108, § 246-295-070, filed 9/6/94, effective 10/7/94.]

WAC 246-295-080 Management and operations agreements. (1) An SMA providing satellite management and operation services only shall have a written agreement with each public water system being served, which shall, at a minimum, address the necessary requirements to comply with applicable regulations regarding management and operation of a public water system; and

(2) The SMA shall submit two copies of all new and renewed agreements to the department within thirty days of the effective date of the contract.

[Statutory Authority: RCW 70.116.134. 94-18-108, § 246-295-080, filed 9/6/94, effective 10/7/94.]

WAC 246-295-090 Periodic review. The SMA shall ensure that a SMA plan is submitted to the department for review and approval every five years or more frequently as required by the secretary. The secretary shall review each approved SMA for compliance with the elements identified in WAC 246-295-050 and 246-295-060. The secretary may request that additional information be submitted to assist in the evaluation of the SMA.

[Statutory Authority: RCW 70.116.134. 94-18-108, § 246-295-090, filed 9/6/94, effective 10/7/94.]

WAC 246-295-100 SMA compliance. (1) A SMA:

(a) Shall comply with all statutes and regulations governing public water systems including but not limited to chapters 70.116, 70.119 and 70.119A RCW and chapters 246-290, 246-291, 246-292, 246-293 and 246-294 WAC and the requirements of this chapter; and

(b) Shall adhere to its SMA plan.

(2) The department may revoke, suspend, modify or deny the certification or application of any SMA or applicant which:

(a) Fails to timely submit required information;

(b) Has been subject to departmental enforcement action for violation of statutes or regulations governing public water systems;

(c) Violates or has violated statues or regulations governing public water systems;

(d) Fails to comply with its SMA plan;

(e) Fails to have or maintain required staff;

(f) Fails to comply with all applicable local ordinances, regulations, plans and policies;

(g) Fails to demonstrate financial viability whether at the time of application or subsequently;

(h) Fails to bring a noncomplying system into regulatory compliance within the time frame established under WAC 246-295-110; or

(i) Operates in a manner that threatens public health.

(3) Any SMA or applicant aggrieved by the department's decision to revoke, suspend, modify or deny their approval or application may appeal such decision in accordance with chapter 246-10 WAC and chapter 34.05 RCW.

(4) An approved SMA that files a timely appeal of a decision to revoke, suspend or modify its approval under chapter 246-10 WAC and/or chapter 34.05 RCW may continue to operate until a final departmental decision is issued, unless protection of the public health, safety and welfare requires summary action.

(5) If a SMA is removed from the approved list and desires reinstatement, the SMA must submit a new notice of intent to become an approved SMA and follow the process outlined in WAC 246-295-040, provided that the reapplication shall be subject to any limitations imposed by final departmental order or if applicable, order on judicial review.

[Statutory Authority: RCW 70.116.134. 94-18-108, § 246-295-100, filed 9/6/94, effective 10/7/94.]

WAC 246-295-110 Special provisions. (1) SMAs willing to take ownership of systems which have not obtained their operating permit or are classified in the red operating permit category pursuant to chapter 246-294 WAC, may be allowed a "special provision" whereby they are given time to bring the system into regulatory compliance. This "special provision" is subject to an agreement among the SMA, the department and, if applicable, the public water system that documents how and within what time frame the SMA will bring the noncomplying system into compliance.

(2) Extensions to the time frame may be granted if agreed upon between the SMA and the secretary. If the agreed upon time frame passes and no extension has been granted, the system at issue shall remain out of compliance and the SMA shall be removed from the approved SMA list.

[Statutory Authority: RCW 70.116.134. 94-18-108, § 246-295-110, filed 9/6/94, effective 10/7/94.]

WAC 246-295-120 Fees. The secretary is authorized to assess reasonable fees to process applications for initial approval and for periodic review of SMAs.

[Statutory Authority: RCW 70.116.134. 94-18-108, § 246-295-120, filed 9/6/94, effective 10/7/94.]

WAC 246-295-130 Severability. If any provision of this chapter or its application to any person or circumstance is held invalid, the remainder of the chapter, or the application of the provision to other persons or circumstances, shall not be affected.

[Statutory Authority: RCW 70.116.134. 94-18-108, § 246-295-130, filed 9/6/94, effective 10/7/94.]

Chapter 246-296 WAC

DRINKING WATER STATE REVOLVING FUND LOAN PROGRAM

WAC

246-296-010	Purpose and scope.
246-296-020	Definitions.
246-296-030	Administration.
246-296-040	Use of funds.
246-296-050	Establishing terms of assistance.
246-296-060	Establishing loan fee, loan fee account, and loan fee uses.
246-296-070	Projects and project-related costs eligible for assistance from the fund.
246-296-080	Projects and costs not eligible for assistance from the fund.
246-296-090	Water system eligibility requirements.
246-296-100	Minimum requirements to be eligible for assistance from the fund.
246-296-110	Requirements for using DWSRF to create a new Group A water system.
246-296-120	Annual loan application responsibilities.
246-296-130	Project priority ranking criteria.
246-296-140	Final project selection criteria.
246-296-150	Loan conditions.
246-296-160	Dispute resolution.
246-296-170	State environmental review process.
246-296-180	Obligation for systems to comply if assistance is not obtained.
246-296-190	Severability.

WAC 246-296-010 Purpose and scope. The purpose of this chapter is to:

(1) Define regulatory requirements for the provision of financial assistance to public water systems provided by the drinking water state revolving fund (DWSRF);

(2) Ensure the state's public drinking water supplies are safe and reliable;

(3) Ensure funding is available to eligible public water systems to finance infrastructure costs associated with providing safe and reliable drinking water;

(4) Ensure the department of health utilizes a portion of the capitalization grant for set-aside activities in accordance with the federal rule;

(5) Ensure public water systems receiving funding are properly operated, managed, and maintained consistent with DWSRF capacity requirements;

(6) Ensure permanent institutions exist to manage funds for public water system needs; and

(7) Define the responsibilities of the department of health (DOH); the public works board (board); and the board's agent, the department of community, trade and economic development (CTED) for administering the DWSRF loan program.

[Statutory Authority: RCW 70.119A.170. 01-21-137, § 246-296-010, filed 10/24/01, effective 11/24/01.]

WAC 246-296-020 Definitions. "Act" means the Federal Safe Drinking Water Act (SDWA).

"Application" means a DWSRF loan application submitted to DOH for DWSRF assistance.

"Application package" means DWSRF loan application form(s), requirements, terms of assistance, and related information jointly developed and published by DOH, the board, and the board's agent, CTED.

"Binding commitment" means a legal obligation by the state to an assistance recipient that defines the terms and the timing for assistance under this chapter.

"Board" means the state of Washington public works board.

"Borrower" means the entity or individual that has the legal and financial responsibility for the loan.

"Certification/certify" means documentation signed by the loan recipient that specific requirements or standards have been or will be met.

"Change orders" means a formal document that alters specific conditions of the original construction contract document including a change in the scope of work, contract price, construction methods, construction schedule, change in location, size, capacity, or quality of major equipment.

"Community water system" means any Group A public water system that regularly serves fifteen or more year-round residential connections, or twenty-five or more year-round residents for one hundred eighty or more days per year.

"Construction documents" means construction documents developed and approved under WAC 246-290-120.

"Construction completion report" means a form provided by DOH to the applicant required to be completed for each specific construction project to document project construction in accordance with chapter 246-290 WAC and general standards of engineering practice. The completed form must be stamped with an engineer's seal, signed, and dated by a professional engineer.

"Cross-cutting authorities" means federal or state laws and authorities that apply to projects or activities receiving federal or state assistance.

"CTED" means the department of community, trade and economic development.

"Debt obligation" means a legal obligation or liability to pay something to someone else.

"Default" means failure to meet a financial obligation such as a loan payment.

"Disadvantaged community" means the service area of a public water system where at least fifty-one percent of the customers are at or below eighty percent of the county median household income as defined annually by the Federal Department of Housing and Urban Development.

"Distressed county" means a county that is designated by the Washington state employment security department as distressed.

"DOH" means the department of health.

"Drinking water state revolving fund (DWSRF)" means the program established to administer the federal funds and other funds deposited in the account authorized to finance water system infrastructure, drinking water program activities, and to meet the applicable requirements of RCW 70.119A.170.

"Eligible system" means Group A community water systems, both privately and publicly owned, and nonprofit Group A noncommunity water systems.

"EPA" means the United States Environmental Protection Agency.

"Group A system" means a public water system that regularly serves fifteen or more residential connections, or twenty-five or more people per day for sixty or more days per year.

"Group B system" means a public water system that serves less than fifteen residential connections and less than twenty-five people per day, or serves twenty-five or more people per day for sixty or fewer days per year.

"Individual water supply system" means any water system that is not subject to the state board of health drinking water regulations, chapter 246-290 WAC; or chapter 246-291 WAC, providing water to one single-family residence, or four or fewer connections all of which serve residences on the same farm.

"Intended use plan (IUP)" means the federally required document prepared each year by the state which identifies the intended uses of the funds in the DWSRF and describes how those uses support the goals of the DWSRF.

"HUD" means the United States Department of Housing and Urban Development.

"Loan" means an agreement between the DWSRF and the assistance recipient through which the DWSRF provides funds for eligible assistance and the recipient agrees to repay the principle sum to the DWSRF.

"Multiple benefit" means project improvements that address more than one type of health risk.

"Noncommunity water system" means a Group A public water system that is not a community water system.

"Nonprofit organization" means a system that has a federal tax exempt status identification number.

"Nontransient noncommunity system" means a Group A noncommunity water system that serves twenty-five or more of the same people per day for one hundred eighty or more days per year.

"Owner" means any agency, subdivision of the state, municipal corporation, firm, company, mutual or cooperative association, institution, partnership, person, or any other entity that holds as property a public water system.

"Project report" means a project report developed and approved under chapter 246-290 WAC.

"Public water system" means any system, providing water for human consumption through pipes or other constructed conveyances excluding systems serving only one single-family residence and systems with four or fewer connections all of which serve residences on the same farm.

"Purveyor" means an agency, subdivision of the state, municipal corporation, firm, company, mutual or cooperative association, institution, partnership, or person, or other entity owning or operating a public water system. Purveyor also means the authorized agents of such entities.

"Regional benefit" means project improvements that affect more than one public water system.

"Restructuring" means changing system operation, management and/or ownership, including, but not limited to:

(1) Mergers;

(2) Voluntary transfer of ownership; or

(3) Receivership (involuntary transfer of operation and/or ownership).

"Safe Drinking Water Act (SDWA)" means the Federal Safe Drinking Water Act, including all amendments.

"Satellite management agency (SMA)" means a person or entity that is approved by the department of health to own or operate public water systems on a regional or countywide basis, without the necessity for a physical connection between such systems. SMA's are regulated under chapter 246-295 WAC.

"Set-aside" means the use of a portion of DWSRF funds allotted to the state for a range of specific SDWA-related activities as authorized in Section 1452 of the SDWA, to fund new programs, and other drinking water program activities.

"Significant noncomplier (SNC)" means a water system that is violating or has violated department rules and the violations may create or have created an imminent or a significant risk to human health.

"Small water system management program (SWSMP)" means a small water system management program developed and approved under WAC 246-290-105.

"State environmental review process (SERP)" means the environmental review process conducted on all DWSRF projects that ensures compliance with state and federal environmental review through a National Environmental Policy Act (NEPA)-like process.

"State match" means funds equaling at least twenty percent of the amount of the federal capitalization grants the state must deposit into the DWSRF loan fund including the necessary match for set-asides.

"Surface water" means a body of water open to the atmosphere and subject to surface runoff.

"System capacity" means the system's operational, technical, managerial and financial capability to achieve and maintain compliance with all relevant local, state, and federal plans and regulations.

"Transfer of ownership" means to convey ownership of a water system from one person or entity to another.

"Transient noncommunity system" means a Group A noncommunity water system that serves:

(1) Twenty-five or more different people per day during sixty or more days per year;

(2) Twenty-five or more of the same people per day for less than one hundred eighty days per year and during more than fifty-nine days per year; or

(3) One thousand or more people for two or more consecutive days.

"Water facilities inventory form (WFI)" means the DOH form summarizing each public water system's characteristics.

"Water right" means a permit, claim, or other authorization, on record with or accepted by the department of ecology, authorizing the beneficial use of water in accordance with all applicable state laws.

"Water system plan (WSP)" means a water system plan developed and approved under WAC 246-290-100.

[Statutory Authority: RCW 70.119A.170. 01-21-137, § 246-296-020, filed 10/24/01, effective 11/24/01.]

WAC 246-296-030 Administration. (1) DOH, the board, and CTED jointly administer the DWSRF.

(2) DOH is responsible for:

(a) Administering the federal DWSRF;

(b) Determining and managing use of DWSRF set-aside funds for drinking water program regulatory and technical assistance purposes as authorized under the SDWA; and

(c) Developing prioritized lists of projects for DWSRF financial assistance.

(3) The board is responsible for the final selection of projects to receive DWSRF financial assistance.

(4) CTED, the board's administrative agent, is responsible for managing DWSRF project loans.

[Statutory Authority: RCW 70.119A.170. 01-21-137, § 246-296-030, filed 10/24/01, effective 11/24/01.]

WAC 246-296-040 Use of funds. The DWSRF may be used for the following purposes:

(1) To accept and retain funds from capitalization grants provided by the federal government, state matching funds appropriated in accordance with RCW 70.119A.170, payments of principal and interest, fees, and any other funds earned and deposited;

(2) To finance loans for the planning, design, and/or construction costs of water system infrastructure needed to facilitate compliance with the federal, state, and local drinking water standards;

(3) To finance the reasonable costs incurred by DOH, the board and CTED in the administration of the program; or

(4) To fund set-aside activities authorized in categories (b) through (e) of Section 35.3535 of the SDWA including (b) program administration and technical assistance, (c) small systems technical assistance, (d) state program management, and (e) local assistance and other state programs.

[Statutory Authority: RCW 70.119A.170. 01-21-137, § 246-296-040, filed 10/24/01, effective 11/24/01.]

WAC 246-296-050 Establishing terms of assistance. DWSRF loans shall be provided at or below market rate interest levels. Loans may be made for the useful life of the improvement or for a maximum of twenty years. The assistance recipient shall begin repayment of the principal and interest no later than one year after project completion. A project is complete when operations are initiated or are capable of being initiated. Disadvantaged communities may receive a loan for up to thirty years at an interest rate established at or below market interest rates as long as the loan does not exceed the useful life of the project. The board is responsible for establishing terms that secure the debt and maintain a financially sound revolving loan fund in perpetuity. Specific rates and contract terms shall be published in the annual application package.

[Statutory Authority: RCW 70.119A.170. 01-21-137, § 246-296-050, filed 10/24/01, effective 11/24/01.]

WAC 246-296-060 Establishing loan fee, loan fee account, and loan fee uses. The board shall establish the terms of a loan fee and assess the fee to each project loan. The loan fee amount is to be established on an annual basis to ensure adequate funding is available to maintain administration of the DWSRF in perpetuity. The loan fee is eligible to be covered by the loan. The amount of the loan fee shall be published in the annual application package. Loan fees shall be deposited into and retained in a dedicated loan fee account and shall only be used for program administration activities unless the board and DOH jointly determine that the loan fee account balance exceeds program administration needs, then a portion of or all of the funds may be transferred to the project loan account to be used for project loans. Information on the loan fee account, including the current fee and account balance, shall be included in the intended use plan. The board and DOH are responsible for jointly determining the amount of the loan fee account funds to be used for current and future program administration.

[Statutory Authority: RCW 70.119A.170. 01-21-137, § 246-296-060, filed 10/24/01, effective 11/24/01.]

WAC 246-296-070 Projects and project-related costs eligible for assistance from the fund. (1) Projects and

project-related costs eligible for assistance from the DWSRF program include those that:

(a) Address violation of applicable federal, state, and local drinking water standards;

(b) Prevent future violations of applicable federal, state, and local drinking water standards; or

(c) Replace aging infrastructure if needed to maintain compliance or further public health protection goals of applicable federal, state, and local drinking water standards;

(2) Specific projects and project-related costs eligible for assistance include those that:

(a) Are treatment, transmission, distribution, source, or storage projects;

(b) Consolidate water supplies;

(c) Retroactively finance municipal projects that are for treatment of surface water, GWI (ground water under the influence of surface water), volatile organic chemicals, inorganic chemicals, or are projects that are required by department or EPA order;

(d) Acquire real property if it is integral to a project to meet or maintain compliance or further public health protection and the property is being acquired from a willing seller;

(e) Finance planning or design costs directly related to DWSRF eligible projects;

(f) Finance costs incurred by publicly owned systems associated with restructuring of systems;

(g) Acquire, build, or rehabilitate reservoirs, including clear wells, that are part of the treatment process and located on the property where the treatment facility is located; or

(h) Acquire, build, or rehabilitate distribution reservoirs.

[Statutory Authority: RCW 70.119A.170. 01-21-137, § 246-296-070, filed 10/24/01, effective 11/24/01.]

WAC 246-296-080 Projects and costs not eligible for assistance from the fund. Projects and project-related costs that are not eligible for assistance from the DWSRF program include:

(1) Acquisition, construction, or rehabilitation of dams or raw water reservoirs;

(2) Acquisition of water rights, except if the water rights are owned by a system that is being acquired through consolidation;

(3) Laboratory fees for monitoring;

(4) Operation and maintenance expenses;

(5) Projects needed primarily for fire protection;

(6) Projects needed primarily to serve future population growth;

(7) Costs incurred by privately owned systems associated with restructuring systems;

(8) Projects that have received assistance from the national set-aside for Indian tribes and Alaska native villages under Section 1452(i) of the SDWA;

(9) Projects for an individual water supply system or a Group B system unless the system is being consolidated into a Group A system. Consolidation may be accomplished by extending a water line from an existing Group A system or by creating a new Group A system under WAC 246-296-120; or

(10) Projects that are solely for the purpose of installing service meters.

[Statutory Authority: RCW 70.119A.170. 01-21-137, § 246-296-080, filed 10/24/01, effective 11/24/01.]

WAC 246-296-090 Water system eligibility requirements. (1) Systems eligible for assistance from the fund include:

(a) Publicly and privately owned community water systems, excluding those systems not eligible for assistance from the fund under WAC 246-296-100; and

(b) Noncommunity public water systems owned by a nonprofit organization.

(2) Systems not eligible for assistance from the fund include:

(a) Noncommunity public water systems owned by a for-profit organization;

(b) State-owned water systems;

(c) Federally owned water systems; or

(d) Systems lacking the technical, financial, and managerial capability to ensure compliance with all applicable federal, state, and local drinking water standards, unless the assistance will ensure compliance and the owners and operators of the system(s) agree to undertake feasible and appropriate changes in operation and management to ensure compliance in the future.

[Statutory Authority: RCW 70.119A.170. 01-21-137, § 246-296-090, filed 10/24/01, effective 11/24/01.]

WAC 246-296-100 Minimum requirements to be eligible for assistance from the fund. To be eligible for assistance from the fund, applicants are responsible for:

(1) Demonstrating that the water system has the technical, financial, and managerial capability to ensure compliance with applicable federal, state, and local drinking water standards, unless the assistance will ensure compliance and the owners, managers, and operators of the systems agree to undertake feasible changes to ensure compliance over the long term;

(2) Having a DOH-approved WSP or SWSMP containing the proposed project and addressing any capacity-related deficiencies prior to execution of a loan contract;

(3) Being in compliance with applicable federal, state, and local drinking water standards or variance unless the use of the DWSRF assistance will ensure compliance;

(4) Being in compliance with DOH orders;

(5) Having a source meter on each source or installing source meters as a part of the project;

(6) Having meters on all services or installing meters on all services as part of the project unless one of the following exceptions apply:

(a) The project is for a transient noncommunity water system;

(b) The project is for a mobile home park with a master meter;

(c) The project is for an apartment building or complex with a master meter; or

(d) The department determines that the cost of the meters is prohibitive for the DWSRF project as a whole and waiving the meter requirement is necessary to move the project forward and promote priority public health issues;

(7) Ensuring no outstanding penalties are owed to DOH unless an appeal of the imposition of those penalties is pending;

(8) Demonstrating that the project conforms to state water rights laws; and

(9) Assuring that the project is consistent with local land use plans and policies.

[Statutory Authority: RCW 70.119A.170. 01-21-137, § 246-296-100, filed 10/24/01, effective 11/24/01.]

WAC 246-296-110 Requirements for using DWSRF to create a new Group A water system. Projects that create a new water system are eligible for assistance from the fund if:

(1) Upon completion of the project, the system conforms to the rules regarding Group A community water systems promulgated under chapter 246-290 WAC;

(2) The project addresses existing public health problems with serious risks caused by unsafe drinking water;

(3) The project is limited in scope to the specific geographic area affected by contamination and the project is for the purpose of resolving existing public health problems associated with individual wells or surface water sources, or the project is limited in scope to the service area of the systems being consolidated and the project is for the purpose of creating a new regional system by consolidating existing water systems;

(4) The applicant gives at least sixty days notice to the public and potentially affected parties. At a minimum, notice must include posting of a legal notice in the local newspaper;

(5) The applicant has considered alternative solutions to address the problem;

(6) The project is a cost-effective solution to the public health problem; and

(7) The project is to protect public health and not solely to accommodate growth.

[Statutory Authority: RCW 70.119A.170. 01-21-137, § 246-296-110, filed 10/24/01, effective 11/24/01.]

WAC 246-296-120 Annual loan application responsibilities. Annual loan application responsibilities are established as follows:

(1) Applicants shall develop and submit a DWSRF assistance application to DOH on or before the due date defined in the application package.

(2) DOH responsibilities are to:

(a) Determine the eligibility of the project;

(b) Rank the project using the ranking criteria established under WAC 246-296-130;

(c) Develop a prioritized list of projects eligible for assistance;

(d) Develop an intended use plan by:

(i) Publishing a draft intended use plan for public review and comment for a period of thirty days; and

(ii) Amending the plan, if necessary, after considering the comments received;

(e) Submit a capitalization grant application, including the final intended use plan, to EPA for review and approval;

(f) Revise the intended use plan if EPA requests changes; and

(g) If necessary, provide for administrative review and dispute resolution in accordance with WAC 246-296-160.

(3) The board's responsibilities are to:

(a) Determine the financial capability and readiness to proceed of each applicant with a project on the prioritized list using the risk assessment criteria established under WAC 246-296-140;

(b) Make the final selection of projects to receive assistance from the fund in accordance with the criteria established under WAC 246-296-140; and

(c) If necessary, provide for administrative review and dispute resolution in accordance with WAC 246-296-160.

[Statutory Authority: RCW 70.119A.170. 01-21-137, § 246-296-120, filed 10/24/01, effective 11/24/01.]

WAC 246-296-130 Project priority ranking criteria. (1) The following criteria are considered when prioritizing projects for DWSRF financial assistance:

(a) Priority criteria:

(i) Type and significance of public health risk to be addressed;

(ii) Compliance status and need to bring the system into compliance with federal, state, and local drinking water standards; and

(iii) Affordability on a per household basis for community water systems.

(b) Supporting criteria:

(i) Type of project;

(ii) Restructuring;

(iii) Regional benefit;

(iv) Multiple benefit;

(v) Consistency with the Growth Management Act;

(vi) Installation of service meters on existing services not currently metered; and

(vii) Size of population affected by the project.

(2) Values for these criteria shall be developed annually by DOH to ensure projects that resolve the most significant health risks receive the highest values. The values shall be made available to the public in advance of the application cycle and shall be published in the DWSRF application package.

[Statutory Authority: RCW 70.119A.170. 01-21-137, § 246-296-130, filed 10/24/01, effective 11/24/01.]

WAC 246-296-140 Final project selection criteria. The board shall, at a minimum, consider the following in assessing the risk associated with the application:

(1) Ability to repay;

(2) Ability to provide adequate security in case of default; and

(3) Readiness to proceed or the ability of the applicant to promptly commence the project.

[Statutory Authority: RCW 70.119A.170. 01-21-137, § 246-296-140, filed 10/24/01, effective 11/24/01.]

WAC 246-296-150 Loan conditions. (1) Borrowers must comply with applicable laws, regulations, and requirements.

(2) Loans shall include conditions to ensure compliance with the following:

(a) All applicable federal, state, and local laws, orders, regulations, and permits; including, but not limited to, procurement, discrimination, labor, job safety, and drug-free environments, state and federal and women-owned business

regulations. A current list of cross-cutting authorities shall be contained in the application package;

(b) Maintenance of accounting records in accordance with "generally accepted government accounting standards." These standards are defined as, but not limited to, those contained in the United States General Accounting Office (GAO) publication "*Standards for Audit of Governmental Organizations, Programs, Activities, and Functions*";

(c) Demonstration of applicant's legal ability to provide a dedicated source of revenue and guarantee the repayment of their obligations to the fund from that dedicated source. Dedicated sources of revenue could be special assessments, general taxes, or general obligation bonds, revenue bonds, user charges, rates, fees, or other sources; and

(d) Submission of construction completion report(s) for all project components and other documentation required under chapter 246-290 WAC.

(3) Amendments to the loan agreement must be approved by DOH, the board, and the loan recipient.

(a) Amendments to the loan agreement are required when there is a:

(i) Significant change to the project's original ranked application and project scope of work; or

(ii) Need for a time extension beyond the time cited in the original loan agreement to complete project activities.

(b) Amendments to the loan agreement are not required when adjustments are made to reconcile minor differences between the contract and the final project for project close out.

(4) CTED, or another authorized auditor at CTED's discretion, shall audit the financial assistance agreement and records.

(5) If the borrower fails to comply with the terms of the loan under WAC 246-296-150, or fails to use the loan proceeds only for those activities identified in the loan, CTED may terminate the agreement in whole or in part at any time. CTED shall promptly notify the borrower in writing of its determination to terminate, the reason for such termination, and the effective date of the termination. Upon termination of the loan agreement, CTED shall request that the entire remaining balance of the loan together with any interest accrued, be paid immediately.

[Statutory Authority: RCW 70.119A.170. 01-21-137, § 246-296-150, filed 10/24/01, effective 11/24/01.]

WAC 246-296-160 Dispute resolution. (1) If an applicant does not agree with the DOH decision regarding application eligibility, the applicant may request reconsideration of the decision to the director of the DOH division of drinking water. Requests for reconsideration must be in writing and received within ten working days of the date DOH notifies the applicant of the decision.

(2) If an applicant does not agree with the DOH decision regarding priority ranking of the application, the applicant may submit comments to DOH as part of the public review of the draft intended use plan.

(3) If an applicant does not agree with board staff recommendations regarding the loan application section submitted, the applicant may request a review of the decision by the board. Requests for review must be in writing and received by the board fourteen calendar days in advance of the board meeting.

[Statutory Authority: RCW 70.119A.170. 01-21-137, § 246-296-160, filed 10/24/01, effective 11/24/01.]

WAC 246-296-170 State environmental review process. (1) Federal law requires that Washington state follow a state environmental review process (SERP) for projects receiving DWSRF assistance. The purpose of the SERP is to identify any significant impact to the environment that may be caused by the implementation of a DWSRF project. This review must be done in compliance with the National Environmental Policy Act (NEPA) or the State Environmental Policy Act (SEPA) and any other applicable environmental statutes and regulations.

(2) CTED is designated as the lead agency for SERP. CTED shall provide basic guidance to the loan recipient to meet the requirements of this process. Details regarding SERP shall be included in the application package.

[Statutory Authority: RCW 70.119A.170. 01-21-137, § 246-296-170, filed 10/24/01, effective 11/24/01.]

WAC 246-296-180 Obligation for systems to comply if assistance is not obtained. The inability or failure of any public water system to receive assistance from the DWSRF program, or any delay in obtaining assistance, does not alter the obligation of the water system to comply in a timely manner with all applicable federal, state, and local drinking water standards.

[Statutory Authority: RCW 70.119A.170. 01-21-137, § 246-290-180, filed 10/24/01, effective 11/24/01.]

WAC 246-296-190 Severability. If any provision of this chapter or its application to any person or circumstance is held invalid, the remainder of this chapter, or the application of the provision to other persons or circumstances, shall not be affected.

[Statutory Authority: RCW 70.119A.170. 01-21-137, § 246-296-190, filed 10/24/01, effective 11/24/01.]

Chapter 246-305 WAC

CERTIFICATION OF INDEPENDENT REVIEW ORGANIZATIONS

WAC

246-305-001	Purpose and scope.
246-305-010	Definitions.
246-305-020	General requirements for certification.
246-305-030	Conflict of interest.
246-305-040	Expert reviewers.
246-305-050	Independent review process.
246-305-060	Criteria and considerations for independent review determinations.
246-305-070	Administrative processes and capabilities of independent review organizations.
246-305-080	Application for certification as an independent review organization.
246-305-090	Ongoing requirements for independent review organizations.
246-305-100	Powers of department.
246-305-110	Grounds for action against an applicant or a certified IRO.
246-305-990	Maximum fee schedule.

WAC 246-305-001 Purpose and scope. (1) Purpose. These rules are adopted by the Washington state department of health to implement the provisions of RCW 43.70.235 regarding the certification of independent review organizations. Certified independent review organizations are qualified to receive referrals from the insurance commissioner under RCW 48.43.535 to make binding determinations related to health care coverage and payment disputes between health insurance carriers and their enrollees.

(2) Other applicable rules. Independent review also is subject to rules of the insurance commissioner implementing RCW 48.43.535.

(3) Applicability. These rules apply to independent review cases originating in Washington state under RCW 48.43.535, and to independent review organizations conducting these reviews.

[Statutory Authority: RCW 43.70.235 and 48.43.535. 01-08-023, § 246-305-001, filed 3/28/01, effective 4/28/01.]

WAC 246-305-010 Definitions. For the purpose of this chapter, the following words and phrases shall have the following meanings unless the context clearly indicates otherwise.

(1) "Adverse determination" means a decision by a health carrier to deny, modify, reduce, or terminate coverage of or payment for a health care service for an enrollee.

(2) "Applicant" means a person or entity seeking to become a Washington certified IRO (independent review organization).

(3) "Attending provider" includes "treating provider" or "ordering provider" as used in WAC 284-43-620 and 284-43-630.

(4) "Carrier" or "health carrier" has the same meaning in this chapter as in WAC 284-43-130.

(5) "Case" means a dispute relating to a carrier's decision to deny, modify, reduce, or terminate coverage of or payment for health care service for an enrollee, which has been referred to a specific IRO by the insurance commissioner under RCW 48.43.535.

(6) "Clinical peer" means a physician or other health professional who holds an unrestricted license or certification and is in the same or similar specialty as typically manages the medical condition, procedures, or treatment under review. Generally, as a peer in a similar specialty, the individual must be in the same profession, i.e., the same licensure category, as the attending provider. In a profession that has organized, board-certified specialties, a clinical peer generally will be in the same formal specialty.

(7) "Clinical reviewer" means a medical reviewer, as defined in this section.

(8) "Conflict of interest" means violation of any provision of WAC 246-305-030, including, but not limited to, material familial, professional and financial affiliations.

(9) "Contract specialist" means a reviewer who deals with interpretation of health plan coverage provisions. If a clinical reviewer is also interpreting health plan coverage provisions, that reviewer must have the qualifications required of a contract specialist.

(10) "Department" means the Washington department of health.

(11) "Enrollee" means a "covered person" as defined in WAC 284-43-130. "Enrollee" also means a person lawfully acting on behalf of the enrollee, including, but not limited to, a parent or guardian.

(12) "Health care provider" or "provider" means a person practicing health care services consistent with Washington state law, or a person with valid credentials from another state for a similar scope of practice.

(13) "Independent review" means the process of review and determination of a case referred to an IRO under RCW 48.43.535.

(14) "Independent review organization" or "IRO" means an entity certified by the department under this chapter.

(15) "IRO," see independent review organization.

(16) "Material familial affiliation" means any relationship as a spouse, child, parent, sibling, spouse's parent, or child's spouse.

(17) "Material professional affiliation" includes, but is not limited to, any provider-patient relationship, any partnership or employment relationship, or a shareholder or similar ownership interest in a professional corporation.

(18) "Material financial affiliation" means any financial interest including employment, contract or consultation which generates more than five percent of total annual revenue or total annual income of an IRO or an individual director, officer, executive or reviewer of the IRO. This includes a consulting relationship with a manufacturer regarding technology or research support for a specific product.

(19) "Medical reviewer" means a physician or other health care provider who is assigned to an external review case by a certified IRO, consistent with this chapter.

(20) "Medical, scientific, and cost-effectiveness evidence" means published evidence on results of clinical practice of any health profession which complies with one or more of the following requirements:

(a) Peer-reviewed scientific studies published in or accepted for publication by medical journals that meet nationally recognized requirements for scientific manuscripts and that submit most of their published articles for review by experts who are not part of the editorial staff;

(b) Peer-reviewed literature, biomedical compendia, and other medical literature that meet the criteria of the National Institute of Health's National Library of Medicine for indexing in Index Medicus, Excerpta Medicus (EMBASE), Medline, and MEDLARS data base Health Services Technology Assessment Research (HSTAR);

(c) Medical journals recognized by the Secretary of Health and Human Services, under Section 1861 (t)(2) of the Social Security Act;

(d) The American Hospital Formulary Service-Drug Information, the American Medical Association Drug Evaluation, the American Dental Association Accepted Dental Therapeutics, and the United States Pharmacopoeia-Drug Information;

(e) Findings, studies, or research conducted by or under the auspices of federal government agencies and nationally recognized federal research institutes including the Federal Agency for Healthcare Research and Quality, National Institutes of Health, National Cancer Institute, National Academy of Sciences, Health Care Financing Administration, Congressional Office of Technology Assessment, and any national

board recognized by the National Institutes of Health for the purpose of evaluating the medical value of health services;

(f) Clinical practice guidelines that meet institute of medicine criteria; or

(g) In conjunction with other evidence, peer-reviewed abstracts accepted for presentation at major scientific or clinical meetings.

(21) "Referral" means receipt by an IRO of notification from the insurance commissioner that a case has been assigned to that IRO under provisions of RCW 48.43.535.

(22) "Reviewer" or "expert reviewer" means a clinical reviewer or a contract specialist, as defined in this section.

[Statutory Authority: RCW 43.70.235 and 48.43.535. 01-08-023, § 246-305-010, filed 3/28/01, effective 4/28/01.]

WAC 246-305-020 General requirements for certification. In order to qualify for certification, an IRO must:

(1) Demonstrate expertise and a history of reviewing health care in terms of medical necessity, appropriateness, and the application of other health plan coverage provisions.

(2) Demonstrate the ability to handle a full range of review cases occurring in Washington. Certified IROs may contract with more specialized review organizations; however, the certified IRO must ensure that each review conducted meets all the requirements of this chapter.

(3) Demonstrate capability to review administrative and contractual coverage issues, as well as medical necessity and effectiveness and the appropriateness of experimental and investigational treatments.

(4) Comply with all conflict of interest provisions in WAC 246-305-030.

(5) Maintain and assign qualified expert reviewers in compliance with WAC 246-305-040.

(6) Conduct reviews, reach determinations and document determinations consistent with WAC 246-305-050 and 246-305-060.

(7) Maintain administrative processes and capabilities in compliance with WAC 246-305-070.

(8) File an application for certification meeting the requirements of WAC 246-305-080.

[Statutory Authority: RCW 43.70.235 and 48.43.535. 01-08-023, § 246-305-020, filed 3/28/01, effective 4/28/01.]

WAC 246-305-030 Conflict of interest. (1) An IRO:

(a) Must not be a subsidiary of, or in any way owned or controlled by, a carrier or an association of health care providers or carriers;

(b) Must provide information to the department on its own organizational affiliations and potential conflicts of interest at the time of application and when material changes occur;

(c) Must immediately turn down a case referred by the insurance commissioner if accepting it would constitute an organizational conflict of interest; and

(d) Must ensure that reviewers are free from any actual or potential conflict of interest in assigned cases.

(2) An IRO, as well as its reviewers, must not have any material professional, familial, or financial affiliation, as defined in WAC 246-305-010, with the health carrier, enrollee, enrollee's provider, that provider's medical or practice group, the facility at which the service would be provided, or the developer or manufacturer of a drug or device under review. An affiliation with any director, officer or executive of an IRO shall be considered to be an affiliation with the IRO.

(3) The following do not constitute violations of this section:

(a) Staff affiliation with an academic medical center or National Cancer Institute-designated clinical cancer research center;

(b) Staff privileges at a health facility;

(c) Maintaining a provider contract with a carrier which provides no more than five percent of the provider's or clinical group's annual revenue; or

(d) An IRO's receipt of a carrier's payment for independent reviews assigned by the insurance commissioner under RCW 48.43.535.

(4) Notwithstanding the provisions of subsection (3) of this section, a potential reviewer shall be considered to have a conflict of interest with regard to a facility or health plan, regardless of revenue from that source, if the potential reviewer is a member of a standing committee of: The facility, the health plan or a provider network that contracts with the health plan.

(5) A conflict of interest may be waived only if both the enrollee and the health plan agree in writing after receiving full disclosure of the conflict, and only if:

(a) The conflict involves a reviewer, and no alternate reviewer with necessary special expertise is available; or

(b) The conflict involves an IRO and the insurance commissioner determines that seeking a waiver of conflict is preferable to reassigning the review to a different IRO.

[Statutory Authority: RCW 43.70.235 and 48.43.535. 01-08-023, § 246-305-030, filed 3/28/01, effective 4/28/01.]

WAC 246-305-040 Expert reviewers. (1) Each IRO must maintain an adequate number and range of qualified expert reviewers in order to:

(a) Make determinations regarding the full range of independent review cases occurring in Washington under RCW 48.43.535; and

(b) Meet timelines specified in WAC 246-305-050(3) including those for expedited review.

(2) All reviewers shall be health care providers with the exception of contract specialists.

(3) IROs must maintain policies and practices that assure that all clinical reviewers:

(a) Hold a current, unrestricted license, certification, or registration in Washington, or current, unrestricted credentials from another state with substantially comparable requirements, as determined by the department and outlined in the November 2000 edition of the department of health publication, *Health Care Professional Credentialing Requirements*;

(b) Have at least five years of recent clinical experience;

(c) Are board-certified in the case of a medical doctor, a doctor of osteopathy, a podiatrist, or a member of another profession in which board certification exists as determined by the department of health; and

(d) Have the ability to apply scientific standards of evidence in judging research literature pertinent to review

issues, as demonstrated through relevant training or professional experience.

(4) Contract specialists must be knowledgeable in health insurance contract law, as evidenced by training and experience, but do not need to be an attorney or have any state credential.

(5) Assignment of appropriate reviewers to a case.

(a) An IRO shall assign one or more expert reviewer to each case, as necessary to meet requirements of this subsection.

(b) Any reviewer assigned to a case must comply with the conflict of interest provisions in WAC 246-305-030.

(c) The IRO shall assign one or more clinical reviewers to each case. At least one clinical reviewer assigned to each case must meet each of the following requirements:

(i) Have expertise to address each of the issues that are the source of the dispute;

(ii) Be a clinical peer as defined in WAC 246-305-010(6);

(iii) Have the ability to evaluate alternatives to the proposed treatment.

(d) All clinical reviewers assigned must have at least five years of recent clinical experience dealing with the same health conditions under review or similar conditions. Exceptions may be made to this requirement in unusual situations when the only experts available for a highly specialized review are in academic or research life and do not meet the clinical experience requirement.

(e) If contract interpretation issues must be addressed, a contract specialist must be assigned to the review.

(f) Each IRO must have a policy specifying the number and qualifications of reviewers to be assigned to each case. The number of expert reviewers should be dictated by what it takes to meet the requirements of this subsection.

(i) The number of expert reviewers should reflect the complexity of the case, the goal of avoiding unnecessary cost, and the need to avoid tie votes.

(ii) The IRO may consider, but shall not be bound by, recommendations regarding complexity from the carrier or attending provider.

(iii) Special attention should be given to situations such as review of experimental and investigational treatments that may benefit from an expanded panel.

[Statutory Authority: RCW 43.70.235 and 48.43.535. 01-08-023, § 246-305-040, filed 3/28/01, effective 4/28/01.]

WAC 246-305-050 Independent review process. (1) Information for review.

(a) IROs must request as necessary, accept and consider the following information as relevant to a case referred:

(i) Information that the carrier is required to submit to the IRO under WAC 284-43-630, including information identified in that section that is initially missing or incomplete as submitted by the carrier.

(ii) Other medical, scientific, and cost-effectiveness evidence which is relevant to the case. For the purposes of this section, medical, scientific, and cost-effectiveness evidence has the meaning assigned in WAC 246-305-010.

(b) After referral of a case, an IRO must accept additional information from the enrollee, the carrier, or a provider acting on behalf of the enrollee or at the enrollee's request, provided the information is submitted within seven calendar days of the referral or, in the case of an expedited referral, within twenty-four hours. The additional information must be related to the case and relevant to statutory criteria.

(2) Completion of reviews: Once the insurance commissioner refers a review, the IRO must proceed to final determination unless requested otherwise by both the carrier and the enrollee.

(3) Time frames for reviews.

(a) An IRO must make its determination within the following time limits:

(i) If the review is not expedited, within fifteen days after receiving necessary information, or within twenty days after receiving the referral, whichever is earlier. In exceptional circumstances where information is incomplete, the determination may be delayed until no later than twenty-five days after receiving the referral.

(ii) If the review is expedited, within seventy-two hours after receiving all necessary information, or within eight days after receiving the referral, whichever is earlier. Expedited time frames apply when a condition could seriously jeopardize the enrollee's health or ability to regain maximum function, as determined consistent with WAC 284-43-620. If information on whether a referral is expedited is not provided to the IRO, the IRO may presume that it is not an expedited review, but the IRO has the option to seek clarification from the insurance commissioner.

(b) An IRO must provide notice to enrollees and the carrier of the result and basis for the determination, consistent with subsection (5) of this section, within two business days of making a determination in regular cases and immediately in expedited cases.

(c) As used in this subsection, a day is a calendar day, except that if the period ends on a weekend or an official Washington state holiday, the time limit is extended to the next business day. A business day is any day other than Saturday, Sunday or an official Washington state holiday.

(4) Decision-making procedures.

(a) The independent review process is intended to be neutral and independent of influence by any affected party or by state government. The department may conduct investigations under the provisions of this chapter but the department has no involvement in the disposition of specific cases.

(b) Independent review is a paper review process. These rules do not establish a right to in-person participation or attendance by the enrollee, the health plan, or the attending provider nor to reconsideration of IRO determinations.

(c) An IRO shall present cases to reviewers in a way that maximizes the likelihood of a clear, unambiguous determination. This may involve stating or restating the questions for review in a clear and precise manner that encourages yes or no answers.

(d) If more than one reviewer is used, the IRO shall:

(i) Provide an opportunity for the reviewers to exchange ideas and opinions about the case with one another, if requested by a reviewer. This shall be done in a manner that avoids pressure on reviewers to take a position with which they do not agree and preserves a dissenting reviewer's opportunity to document the rationale for dissent in the case file.

(ii) Accept the majority decision of the clinical reviewers in determining clinical issues.

(e) When a case requires an interpretation regarding the application of health plan coverage provisions, that determination shall be made by a reviewer or reviewers who are qualified as contract specialists.

(f) An IRO may uphold an adverse determination if the patient or any provider refuses to provide relevant medical records that are available and have been requested with reasonable opportunity to respond. An IRO may overturn an adverse determination if the carrier refuses to provide relevant medical records that are available and have been requested with reasonable opportunity to respond.

(g) If reviewers are deadlocked, the IRO may add another reviewer if time allows.

(h) If all pertinent information has been disclosed and reviewers are unable to make a determination, the IRO shall decide in favor of the enrollee.

(5) Notification and documentation of determinations. An IRO must notify the enrollee and the carrier of the result and rationale for the determination, including its clinical basis unless the decision is wholly based on application of coverage provisions, within the time frame in subsection (3)(b) of this section.

(a) Documentation of the basis for the determination shall include references to support evidence, and if applicable, the rationale for any interpretation regarding the application of health plan coverage provisions.

(b) If the determination overrides the health plan's medical necessity or appropriateness standards, the rationale shall document why the health plan's standards are unreasonable or inconsistent with sound, evidence-based medical practice.

(c) The written report shall include the qualifications of reviewers but shall not disclose the identity of the reviewers.

(d) Notification of the determination shall be provided initially by phone, e-mail or fax, followed by a written report by mail. In the case of expedited reviews the initial notification shall be immediate and by phone.

[Statutory Authority: RCW 43.70.235 and 48.43.535. 01-08-023, § 246-305-050, filed 3/28/01, effective 4/28/01.]

WAC 246-305-060 Criteria and considerations for independent review determinations. (1) General criteria and considerations.

(a) An IRO's determination must use fair procedures and be consistent with the standards in RCW 43.70.235, 48.43.535, and this chapter.

(b) The expert reviewers from a certified IRO will make determinations regarding the medical necessity or appropriateness of, and the application of health plan coverage provisions to, health care services for an enrollee.

(c) The IRO must ensure that determinations are consistent with the scope of covered benefits as outlined in the medical coverage agreement.

(i) Clinical reviewers may override the health plan's medical necessity or appropriateness standards only if the standards are determined upon review to be unreasonable or inconsistent with sound, evidence-based medical practice.

(ii) Reviewers may make determinations about the application of general health plan coverage provisions to specific issues concerning health care services for an enrollee. For example, whether a specific service is excluded by more general benefit exclusion language may require independent interpretation.

(2) Medical necessity and appropriateness—Criteria and considerations. Only clinical reviewers may determine whether a service, which is the subject of an adverse decision, is medically necessary and appropriate. These determinations must be based upon their expert clinical judgment, after consideration of relevant medical, scientific, and cost-effectiveness evidence, and medical standards of practice in the state of Washington.

(a) Medical standards of practice include the standards appropriately applied to physicians or other health care providers, as pertinent to the case.

(b) In considering medical standards of practice within the state of Washington:

(i) Clinical reviewers may use national standards of care, absent evidence presented by the health plan or enrollee that the Washington standard of care is different.

(ii) A health care service or treatment should be considered part of the Washington standard of practice if reviewers believe that failure to provide it would be inconsistent with that degree of care, skill and learning expected of a reasonably prudent health care provider acting in the same or similar circumstances.

(c) Medical necessity will be a factor in most cases referred to an IRO, but not necessarily in all. See WAC 246-305-060(3).

(3) Health plan coverage provisions—Criteria and considerations. The following requirements shall be observed when a review requires making determinations about the application of health plan coverage provisions to issues concerning health care services for an enrollee.

(a) These determinations shall be made by one or more contract specialists meeting the requirements of WAC 246-305-040(4), except that a clinical determination of medical necessity or appropriateness, by itself, is not an interpretation of the scope of covered benefits and does not require a contract specialist.

(b) If the full health plan coverage agreement has not already been provided by the carrier pursuant to WAC 284-43-630 (2)(f) of the insurance commissioner, the IRO shall request additional provisions from the health plan coverage agreement in effect during the relevant period of the enrollee's coverage, as necessary to have an adequate context for determinations.

(c) In general, the IRO and its contract specialists may assume that the contractual health plan coverage provisions themselves are consistent with the Washington Insurance Code (Title 48 RCW), absent information to the contrary. Primary responsibility for determining consistency with the insurance code, when at issue, rests with the insurance commissioner.

(4) No provision of this chapter should be interpreted to establish a standard of medical care, or to create or eliminate any cause of action.

[Statutory Authority: RCW 43.70.235 and 48.43.535. 01-08-023, § 246-305-060, filed 3/28/01, effective 4/28/01.]

WAC 246-305-070 Administrative processes and capabilities of independent review organizations. (1) An IRO must maintain written policies and procedures covering all aspects of review.

(2) An IRO must ensure the confidentiality of medical records and other personal health information received for use in independent reviews, in accordance with applicable federal and state laws.

(3) An IRO must have a quality assurance mechanism that ensures the timeliness, quality of review and communication of determinations to enrollees and carriers. The mechanism must also ensure the qualifications, impartiality, and freedom from conflict of interest of the organization, its staff, and expert reviewers.

(a) The quality assurance program must include a written plan addressing scope and objectives, program organization, monitoring and oversight mechanisms, and evaluation and organizational improvement of IRO activities.

(b) Quality of reviews includes use of appropriate methods to match the case, confidentiality, and systematic evaluation of complaints for patterns or trends. Complaints must be recorded on a log, including nature of complaint and how resolved. The department reserves the right to examine both the complaints and the log.

(c) Organizational improvement efforts must include the implementation of action plans to improve or correct identified problems, and communication of the results of action plans to staff and reviewers.

(4) An IRO must maintain case logs and case files with full documentation of referrals, reviewers, questions posed, information considered (including sources of the information and citations of studies or criteria), determinations and their rationale, communication with parties in the dispute including notices given, and key dates in the process, for at least two years following the review.

(5) An IRO must maintain a training program for staff and expert reviewers, addressing at least:

(a) Confidentiality;

(b) Neutrality and conflict of interest;

(c) Appropriate conduct of reviews;

(d) Documentation of evidence for determination; and

(e) In the case of contract specialists, principles of health contract law and any provisions of Washington law determined to be essential.

(6) An IRO must maintain business hours, methods of contact (including by telephone), procedures for after-hours requests, and other relevant procedures to ensure timely availability to conduct expedited as well as regular reviews.

(7) An IRO shall not disclose reviewers' identities. The department will not require reviewers' identities as part of the certification application process but may examine identified information about reviewers as part of enforcement activities.

(8) An IRO shall promptly report any attempt at interference by any party, including a state agency, to the department.

(9) An IRO shall have a medical director who holds a current unrestricted license as a medical doctor or osteopathic physician and has had experience in direct patient care. The medical director shall provide guidance for clinical aspects of the independent review process and oversee the IRO's quality assurance and credentialing programs.

[Statutory Authority: RCW 43.70.235 and 48.43.535. 01-08-023, § 246-305-070, filed 3/28/01, effective 4/28/01.]

WAC 246-305-080 Application for certification as an independent review organization. (1) To be certified as an independent review organization under this chapter, an organization must submit to the department an application in the form required by the department. The application must include:

(a) For an applicant that is publicly held, the name of each stockholder or owner of more than five percent of any stock or options;

(b) The name of any holder of bonds or notes of the applicant that exceed one hundred thousand dollars;

(c) The name and type of business of each corporation or other organization that the applicant controls or is affiliated with and the nature and extent of the affiliation or control;

(d) The name and a biographical sketch of each director, officer, and executive of the applicant and any entity listed under (c) of this subsection and a description of any relationship the named individual has with:

(i) A carrier;

(ii) A utilization review agent;

(iii) A nonprofit or for-profit health corporation;

(iv) A health care provider;

(v) A drug or device manufacturer; or

(vi) A group representing any of the entities described by (d)(i) through (v) of this subsection;

(e) The percentage of the applicant's revenues that the applicant anticipates will be derived from reviews conducted under RCW 48.43.535;

(f) A description of the areas of expertise of the health care professionals and contract specialists making review determinations for the applicant, as well as the IRO's policies and standards addressing qualifications, training, and assignment of all types of reviewers;

(g) The procedures that the independent review organization will use in making review determinations regarding reviews conducted under RCW 48.43.535;

(h) Attestations that all requirements will be met;

(i) Evidence of accreditations, certifications, and government IRO contracts that the applicant believes demonstrate compliance with certain requirements of this chapter.

(i) Applicants must authorize release of information from primary sources, including full reports of site visits, inspections and audits;

(ii) The department may require the applicant to indicate which documents demonstrate compliance with specific Washington state certification requirements under this chapter.

(j) Other documentation, including, but not limited to, legal and financial information, policies and procedures, and data that are pertinent to requirements of this chapter; and

(k) Any other reasonable application requirements demonstrating ability to meet all requirements for certification in Washington.

(2) Department investigation and verification activities regarding the applicant may include, but are not limited to:

(a) Review of application and filings for completeness and compliance with standards;

(b) On-site survey or examination;

(c) Primary-source verification with accreditation or regulatory bodies of compliance with requirements which are used to demonstrate compliance with certain standards in this chapter;

(d) Other means of determining regulatory and accreditation histories; and

(e) Exercising any power of the department under WAC 246-305-100.

[Statutory Authority: RCW 43.70.235 and 48.43.535. 01-08-023, § 246-305-080, filed 3/28/01, effective 4/28/01.]

WAC 246-305-090 Ongoing requirements for independent review organizations. A certified IRO shall:

(1) Comply with the provisions of RCW 43.70.235, 48.43.535(5), and this chapter;

(2) Cooperate with the department during investigations;

(3) Provide the department with information requested in a prompt manner;

(4) Conduct annual self-assessments of compliance with Washington certification requirements;

(5) File an annual statistical report with the department on a form specified by the department summarizing reviews conducted. The report shall include, but may not be limited to, volumes, types of cases, compliance with timelines for expedited and nonexpedited cases, determinations, number and nature of complaints, and compliance with conflict of interests rules.

(6) Submit updated information to the department if at any time there is a material change in the information included in the application.

[Statutory Authority: RCW 43.70.235 and 48.43.535. 01-08-023, § 246-305-090, filed 3/28/01, effective 4/28/01.]

WAC 246-305-100 Powers of department. (1) The department may deny, suspend, revoke or modify certification of an IRO if the department has reason to believe the applicant, certified IRO, its agents, officers, directors, or any person with any interest therein has failed or refused to comply with the requirements established under this chapter.

(2) The department may conduct an on-site review, audit, and examine records to investigate complaints alleging that an applicant, certified IRO or reviewer committed conduct described in WAC 246-305-110.

[Statutory Authority: RCW 43.70.235 and 48.43.535. 01-08-023, § 246-305-100, filed 3/28/01, effective 4/28/01.]

WAC 246-305-110 Grounds for action against an applicant or a certified IRO. (1) The department may deny an application for certification or suspend, revoke or modify certification if the applicant, certified IRO, its agents, officers, directors, or any person with any interest therein:

(a) Knowingly or with reason to know makes a misrepresentation of, false statement of, or fails to disclose, a material fact to the department. This applies to any data attached to any record requested or required by the department or matter under investigation or in a self-inspection;

(b) Obtains or attempts to obtain certification by fraudulent means or misrepresentation;

(c) Fails or refuses to comply with the requirements of RCW 43.70.235, 48.43.535(5), or this chapter;

(d) Conducts business or advertising in a misleading or fraudulent manner;

(e) Refuses to allow the department access to records, or fails to promptly produce for inspection any book, record, document or item requested by the department, or willfully interferes with an investigation;

(f) Accepts referral of cases from the insurance commissioner under RCW 48.43.535 without certification or with certification which has been terminated or is subject to sanction;

(g) Was the holder of a license, certification or contract issued by the department or by any competent authority in any state, federal, or foreign jurisdiction that was terminated for cause and never reissued, or sanctioned for cause and the terms of the sanction have not been fulfilled;

(h) Had accreditation from a recognized national or state IRO accrediting body that was terminated for cause and never reissued, or sanctioned for cause and the terms of the sanction have not been fulfilled;

(i) Willfully prevents, interferes with, or attempts to impede in any way the work of any representative of the department and the lawful enforcement of any provision of this chapter. This includes, but is not limited to: Willful misrepresentation of facts during an investigation, or administrative proceeding or any other legal action; or use of threats or harassment against any patient, client, customer, or witness, or use of financial inducements to any patient, client, customer, or witness to prevent or attempt to prevent him or her from providing evidence during an investigation, in an administrative proceeding, or any other legal action involving the department;

(j) Willfully prevents or interferes with any department representative in the preservation of evidence;

(k) Misrepresented or was fraudulent in any aspect of the conduct of business;

(l) Within the last five years, has been found in a civil or criminal proceeding to have committed any act that reasonably relates to the person's fitness to establish, maintain, or administer an IRO;

(m) Violates any state or federal statute, or administrative rule regulating the IRO;

(n) Fails to comply with an order issued by the secretary or designee;

(o) Uses interference, coercion, discrimination, reprisal, or retaliation against a patient, client, or customer exercising his or her rights;

(p) Offers, gives, or promises anything of value or benefit to any federal, state, or local employee or official for the purpose of influencing that employee or official to circumvent federal, state, or local laws, regulations, or ordinances governing the certification holder or applicant;

(2) A person, including, but not limited to, enrollees, carriers, and providers, may submit a written complaint to the department alleging that a certified IRO committed conduct described in this section.

(3) An applicant or certified IRO may contest a department decision or action according to the provisions of RCW 43.70.115, chapter 34.05 RCW, and chapter 246-10 WAC.

[Statutory Authority: RCW 43.70.235 and 48.43.535. 01-08-023, § 246-305-110, filed 3/28/01, effective 4/28/01.]

WAC 246-305-990 Maximum fee schedule. This section sets the maximum fee schedule for independent reviews, and the process of review and determination of a case referred to an independent review organization (IRO).

(1) IROs may not charge more than the following amount for each review:

Category	Amount
Contract review, interpretation of health plan coverage provisions	$600
Standard medical review, straightforward review of medical necessity or adverse determination	$700
Highly specialized medical review of complex conditions or experimental treatment	$1000
Medical review with multiple reviewers	$1100
Surcharge for expedited review	$200

The fees in this section include all costs for time and materials associated with the review including, but not limited to:

(a) Record transmission expenses such as postage and facsimile costs; and

(b) Medical record handling and duplication.

(2) If the IRO and the health care plan agree in advance that the referral includes both a contract review and a medical review, the IRO may charge both fees.

(3) If an IRO charges more than the maximum fees allowed under this section, the department may take action described in WAC 246-305-110.

[Statutory Authority: 2005 c 54. 05-24-029, § 246-305-990, filed 11/30/05, effective 12/31/05.]

Chapter 246-310 WAC
CERTIFICATE OF NEED

WAC

246-310-001 Purpose of certificate of need program.
246-310-010 Definitions.
246-310-020 Applicability of chapter 246-310 WAC.
246-310-035 Tertiary services identification.
246-310-040 Exemptions from requirements for a certificate of need for health maintenance organizations.
246-310-041 Exemption from requirements for a certificate of need for continuing care retirement communities' nursing home projects.
246-310-042 Rural hospital and rural health care facility exemptions from certificate of need review.
246-310-043 Exemption from requirements for a certificate of need for nursing home bed conversions to alternative use.
246-310-044 Exemption from requirements for a certificate of need for nursing home bed replacements.
246-310-045 Exemption from certificate of need requirements for a change in bed capacity at a residential hospice care center.
246-310-050 Applicability determination.
246-310-080 Letter of intent.
246-310-090 Submission and withdrawal of applications.
246-310-100 Amendment of certificate of need applications.
246-310-110 Categories of review.
246-310-120 Concurrent review process.
246-310-130 Nursing home concurrent review cycles.
246-310-132 Open heart surgery concurrent review cycle.
246-310-136 Ethnic minority nursing home bed pool—Considerations for review of applications.
246-310-140 Emergency review process.
246-310-150 Expedited review process.
246-310-160 Regular review process.
246-310-170 Notification of beginning of review.
246-310-180 Public hearings.
246-310-190 Ex parte contacts.
246-310-200 Bases for findings and action on applications.
246-310-210 Determination of need.
246-310-220 Determination of financial feasibility.
246-310-230 Criteria for structure and process of care.
246-310-240 Determination of cost containment.
246-310-260 Kidney transplantation.
246-310-261 Open heart surgery standards and need forecasting method.
246-310-263 Pediatric cardiac surgery and interventional treatment center standards and need forecasting method.
246-310-270 Ambulatory surgery.
246-310-280 Kidney disease treatment centers—Definitions.
246-310-282 Kidney disease treatment centers—Concurrent review cycle.
246-310-284 Kidney disease treatment centers—Methodology.
246-310-286 Kidney disease treatment centers—Standards for planning areas without an existing facility.
246-310-287 Kidney disease treatment centers—Exceptions.
246-310-288 Kidney disease treatment centers—Tie-breakers.
246-310-289 Kidney disease treatment centers—Relocation of facilities.
246-310-290 Hospice services—Standards and need forecasting method.
246-310-295 Hospice care center—Standards.
246-310-360 Nursing home bed need method.
246-310-370 Nursing home bed need method revision.
246-310-380 Nursing home bed need standards.
246-310-390 Nursing home bed need adjustments.
246-310-395 Nursing home bed banking for alternative use notice requirements.
246-310-396 Nursing home bed banking requirements for full facility closure.
246-310-397 Nursing home bed replacement notice requirements.
246-310-410 Swing bed review standards.
246-310-470 Review and action on health maintenance organization projects.
246-310-480 Projects proposed for the correction of deficiencies.
246-310-490 Written findings and actions on certificate of need applications.
246-310-500 Issuance, suspension, denial, revocation, and transfer of a certificate of need.
246-310-560 Provision for reconsideration decision.
246-310-570 Circumstances for which an amended certificate of need is required.
246-310-580 Validity and extensions.
246-310-590 Monitoring of approved projects.
246-310-600 Withdrawal of a certificate of need.
246-310-610 Adjudicative proceeding.
246-310-700 Adult elective percutaneous coronary interventions (PCI) without on-site cardiac surgery.
246-310-705 PCI definitions.
246-310-710 Concurrent review.
246-310-715 General requirements.
246-310-720 Hospital volume standards.
246-310-725 Physician volume standards.
246-310-730 Staffing requirements.
246-310-735 Partnering agreements.
246-310-740 Quality assurance.
246-310-745 Need forecasting methodology.
246-310-750 Tiebreaker.
246-310-755 Ongoing compliance with standards.
246-310-900 Capital expenditure minimum adjustment procedures.
246-310-990 Certificate of need review fees.

DISPOSITION OF SECTIONS FORMERLY CODIFIED IN THIS CHAPTER

246-310-002 Purpose of chapter 248-156 WAC. [Statutory Authority: RCW 43.70.040. 91-02-049 (Order 121), recodified as § 246-310-002, filed 12/27/90, effective 1/31/91. Statutory Authority: RCW 70.38.025. 81-09-060 (Order 1641), § 248-156-010, filed 4/20/81.] Repealed by 92-02-018 (Order 224), filed 12/23/91, effective 1/23/92. Statutory Authority: RCW 70.38.135 and 70.38.919.

246-310-030 Index and procedures for adjustment. [Statutory Authority: RCW 43.70.040. 91-02-049 (Order 121), recodified as § 246-310-030, filed 12/27/90, effective 1/31/91. Statutory Authority: RCW 70.38.025. 81-09-060 (Order 1641), § 248-156-030, filed 4/20/81.] Repealed by 92-02-018 (Order 224), filed 12/23/91, effective 1/23/92. Statutory Authority: RCW 70.38.135 and 70.38.919.

246-310-030A Tertiary services identification. [Statutory Authority: RCW 43.70.040. 91-02-049 (Order 121), recodified as § 246-310-030A, filed 12/27/90, effective 1/31/91. Statutory Authority: Chapter 70.38 RCW. 90-21-028 (Order 082), § 248-19-235, filed 10/9/90, effective 10/9/90.] Repealed by 92-02-018 (Order 224), filed 12/23/91, effective 1/23/92. Statutory Authority: RCW 70.38.135 and 70.38.919.

246-310-060 Sanctions for violations. [Statutory Authority: RCW 43.70.040. 91-02-049 (Order 121), recodified as § 246-310-060, filed 12/27/90, effective 1/31/91. Statutory Authority: RCW 70.38.135. 81-09-012 (Order 210), § 248-19-250, filed 4/9/81, effective 5/20/81. Statutory Authority: Chapter 70.38 RCW. 79-12-079 (Order 188), § 248-19-250, filed 11/30/79.] Repealed by 97-20-101, filed 9/29/97, effective 10/30/97. Statutory Authority: RCW 43.70.040.

246-310-070 Periodic reports on development of proposals. [Statutory Authority: RCW 43.70.040. 91-02-049 (Order 121), recodified as § 246-310-070, filed 12/27/90, effective 1/31/91. Statutory Authority: RCW 70.38.135. 86-06-030 (Order 2344), § 248-19-260, filed 2/28/86; 81-09-012 (Order 210), § 248-19-260, filed 4/9/81, effective 5/20/81. Statutory Authority: Chapter 70.38 RCW. 79-12-079 (Order 188), § 248-19-260, filed 11/30/79.] Repealed by 96-24-052, filed 11/27/96, effective 12/28/96. Statutory Authority: Chapter 70.38 RCW.

246-310-135 Ethnic minority nursing home bed pool—Procedures. [Statutory Authority: Chapter 70.38 RCW. 96-24-052, § 246-310-135, filed 11/27/96, effective 12/28/96. Statutory Authority: RCW 70.38.135 (3)(c). 92-05-057 (Order 244), § 246-310-135, filed 2/14/92, effective 3/16/92.] Repealed by 97-20-101, filed 9/29/97, effective 10/30/97. Statutory Authority: RCW 43.70.040.

246-310-250 Open heart surgery. [Statutory Authority: RCW 70.38.135 and 70.38.919. 92-02-018 (Order 224), § 246-310-250, filed 12/23/91, effective 1/23/92. Statutory Authority: RCW 43.70.040. 91-02-049 (Order 121), recodified as § 246-310-250, filed 12/27/90, effective 1/31/91. Statutory Authority: Chapter 70.38 RCW. 90-13-116 (Order 67), § 248-19-600, filed 6/21/90, effective 7/1/90.] Repealed by 92-12-015 (Order 274), filed 5/26/92, effective 6/26/92. Statutory Authority: RCW 70.38.135(3).

246-310-262 Nonemergent interventional cardiology standard. [Statutory Authority: Chapter 70.38 RCW. 96-24-052, § 246-310-262, filed 11/27/96, effective 12/28/96. Statutory Authority: RCW 70.38.135(3). 92-12-015 (Order 274), § 246-310-262, filed 5/26/92, effective 6/26/92.] Repealed by 09-01-113, filed 12/19/08, effective 12/19/08. Statutory Authority: RCW 70.38.128.

246-310-350 Nursing home and continuing care retirement community definitions. [Statutory Authority: RCW 70.38.135 and 70.38.919. 92-02-018 (Order 224), § 246-310-350, filed 12/23/91, effective 1/23/92. Statutory Authority: RCW 43.70.040. 91-02-049 (Order 121), recodified as § 246-310-350, filed 12/27/90, effective 1/31/91. Statutory Authority: RCW 70.38.919. 90-12-071 (Order 062), § 248-19-800, filed 6/1/90, effective 7/1/90.] Repealed by 96-24-052, filed 11/27/96, effective 12/28/96. Statutory Authority: Chapter 70.38 RCW.

246-310-400 AIDS long-term care pilot facility review standards. [Statutory Authority: RCW 70.38.135 and 70.38.919. 92-02-018 (Order 224), § 246-310-400, filed 12/23/91, effective 1/23/92. Statutory Authority: RCW 43.70.040. 91-02-049 (Order 121), recodified as § 246-310-400, filed 12/27/90, effective 1/31/91. Statutory Authority: RCW 70.38.919. 90-12-072 (Order 063), § 248-19-840, filed 6/1/90, effective 7/1/90.] Repealed by 96-24-052, filed 11/27/96, effective 12/28/96. Statutory Authority: Chapter 70.38 RCW.

246-310-620 Certificate of need program reports. [Statutory Authority: RCW 43.70.040. 91-02-049 (Order 121), recodified as § 246-310-620, filed 12/27/90, effective 1/31/91. Statutory Authority: RCW 70.38.135. 81-09-012 (Order 210), § 248-19-490, filed 4/9/81, effective 5/20/81. Statutory Authority: Chapter 70.38 RCW. 79-12-079 (Order 188), § 248-19-490, filed 11/30/79.] Repealed by 98-21-084, filed 10/21/98, effective 11/21/98. Statutory Authority: Chapter 70.38 RCW.

246-310-630 Public access to records. [Statutory Authority: RCW 70.38.135 and 70.38.919. 92-02-018 (Order 224), § 246-310-630, filed 12/23/91, effective 1/23/92. Statutory Authority: RCW 43.70.040. 91-02-049 (Order 121), recodified as § 246-310-630, filed 12/27/90, effective 1/31/91. Statutory Authority: RCW 70.38.135. 81-09-012 (Order 210), § 248-19-500, filed 4/9/81, effective 5/20/81. Statutory Authority: Chapter 70.38 RCW. 79-12-079 (Order 188), § 248-19-500, filed 11/30/79.] Repealed by 97-20-101, filed 9/29/97, effective 10/30/97. Statutory Authority: RCW 43.70.040.

WAC 246-310-001 Purpose of certificate of need program. The purpose of the certificate of need program has been established by the legislature in RCW 70.38.015.

[Statutory Authority: RCW 43.70.040. 91-02-049 (Order 121), recodified as § 246-310-001, filed 12/27/90, effective 1/31/91. Statutory Authority: RCW 70.38.135. 86-06-030 (Order 2344), § 248-19-210, filed 2/28/86; 81-09-012 (Order 210), § 248-19-210, filed 4/9/81, effective 5/20/81. Statutory Authority: Chapter 70.38 RCW. 79-12-079 (Order 188), § 248-19-210, filed 11/30/79.]

WAC 246-310-010 Definitions. For the purposes of chapter 246-310 WAC, the following words and phrases have the following meanings unless the context clearly indicates otherwise.

(1) "Acute care facilities" means hospitals and ambulatory surgical facilities.

(2) "Affected person" means an interested person who:

(a) Is located or resides in the applicant's health service area;

(b) Testified at a public hearing or submitted written evidence; and

(c) Requested in writing to be informed of the department's decision.

(3) "Alterations," see "construction, renovation, or alteration."

(4) "Ambulatory care facility" means any place, building, institution, or distinct part thereof not a health care facility as defined in this section and operated for the purpose of providing health services to individuals without providing such services with board and room on a continuous twenty-four-hour basis. The term "ambulatory care facility" includes the offices of private physicians, whether for individual or group practice.

(5) "Ambulatory surgical facility" means any free-standing entity, including an ambulatory surgery center that operates primarily for the purpose of performing surgical procedures to treat patients not requiring hospitalization. This term does not include a facility in the offices of private physicians or dentists, whether for individual or group practice, if the privilege of using the facility is not extended to physicians or dentists outside the individual or group practice.

(6) "Applicant," means:

(a) Any person proposing to engage in any undertaking subject to review under chapter 70.38 RCW; or

(b) Any person or individual with a ten percent or greater financial interest in a partnership or corporation or other comparable legal entity engaging in any undertaking subject to review under chapter 70.38 RCW.

(7) "Bed banking" means the process of retaining the rights to nursing home bed allocations which are not licensed as outlined in WAC 246-310-395.

(8) "Bed supply" means within a geographic area the total number of:

(a) Nursing home beds which are licensed or certificate of need approved but not yet licensed or beds banked under

RCW 70.38.111 (8)(a) or where the need is deemed met under RCW 70.38.115 (13)(b), excluding:

(i) Those nursing home beds certified as intermediate care facility for the mentally retarded (ICF-MR) the operators of which have not signed an agreement on or before July 1, 1990, with the department of social and health services department of social and health services to give appropriate notice prior to termination of the ICF-MR service;

(ii) New or existing nursing home beds within a CCRC which are approved under WAC 246-310-380(5); or

(iii) Nursing home beds within a CCRC which is excluded from the definition of a health care facility per RCW 70.38.025(6); and

(iv) Beds banked under RCW 70.38.115 (13)(b) where the need is not deemed met.

(b) Licensed hospital beds used for long-term care or certificate of need approved hospital beds to be used for long-term care not yet in use, excluding swing-beds.

(9) "Bed-to-population ratio" means the nursing home bed supply per one thousand persons of the estimated or forecasted resident population age seventy and older.

(10) "Capital expenditure": Except for WAC 246-310-280, capital expenditure means an expenditure, including a force account expenditure (i.e., an expenditure for a construction project undertaken by a nursing home facility as its own contractor), which, under generally accepted accounting principles, is not properly chargeable as an expense of operation or maintenance. The costs of any studies, surveys, designs, plans, working drawings, specifications, and other activities (including staff effort, consulting and other services which, under generally accepted accounting principles, are not properly chargeable as an expense of operation and maintenance) shall be considered capital expenditures. Where a person makes an acquisition under lease or comparable arrangement, or through donation, which would have required certificate of need review if the acquisition had been made by purchase, this acquisition shall be deemed a capital expenditure. Capital expenditures include donations of equipment or facilities to a nursing home facility, which if acquired directly by the facility, would be subject to review under this chapter and transfer of equipment or facilities for less than fair market value if a transfer of the equipment or facilities at fair market value would be subject to the review.

(11) "Certificate of need" means a written authorization by the secretary's designee for a person to implement a proposal for one or more undertakings.

(12) "Certificate of need program" means that organizational program of the department responsible for the management of the certificate of need program.

(13) "Commencement of the project" means whichever of the following occurs first: In the case of a construction project, giving notice to proceed with construction to a contractor for a construction project provided applicable permits have been applied for or obtained within sixty days of the notice; beginning site preparation or development; excavating or starting the foundation for a construction project; or beginning alterations, modification, improvement, extension, or expansion of an existing building. In the case of other projects, initiating a health service.

(14) "Construction, renovation, or alteration" means the erection, building, remodeling, modernization, improvement, extension, or expansion of a physical plant of a health care facility, or the conversion of a building or portion thereof to a health care facility.

(15) "Continuing care contract" means a contract providing a person, for the duration of that person's life or for a term in excess of one year, shelter along with nursing, medical, health-related, or personal care services. The contract is conditioned on the transfer of property, the payment of an entrance fee to the provider of the services, or the payment of periodic charges for the care and services involved. A continuing care contract is not excluded from this definition because the contract is mutually terminable or because shelter and services are not provided at the same location.

(16) "Continuing care retirement community (CCRC)" means any of a variety of entities, unless excluded from the definition of health care facility under RCW 70.38.025(6), which provides shelter and services based on continuing care contracts with its residents which:

Maintains for a period in excess of one year a CCRC contract with a resident which provides or arranges for at least the following specific services:

(a) Independent living units;

(b) Nursing home care with no limit on the number of medically needed days;

(c) Assistance with activities of daily living;

(d) Services equivalent in scope to either state chore services or medicaid home health services;

(e) Continues a contract, if a resident is no longer able to pay for services;

(f) Offers services only to contractual residents with limited exception during a transition period; and

(g) Holds the medicaid program harmless from liability for costs of care, even if the resident depletes his or her personal resources.

(17) "Days" means calendar days. Days are counted starting the day after the date of the event from which the designated period of time begins to run. If the last day of the period falls on a Saturday, Sunday, or legal holiday observed by the state of Washington, a designated period runs until the end of the first working day following the Saturday, Sunday, or legal holiday.

(18) "Department" means the Washington state department of health.

(19) "Effective date of facility closure" means:

(a) The date on which the facility's license was relinquished, revoked or expired; or

(b) The date the last resident leaves the facility, whichever comes first.

(20) "Enhance the quality of life for residents" means, for the purposes of voluntary bed banking, those services or facility modifications which have a direct and immediate benefit to the residents. These include, but are not limited to: Resident activity and therapy facilities; family visiting rooms; spiritual rooms and dining areas. These services or facility modifications shall not include those that do not have direct and immediate benefit to the residents, such as: Modifications to staff offices; meeting rooms; and other staff facilities.

(21) "Established ratio" means a bed-to-population ratio of forty beds per one thousand persons of the estimated or forecast resident population age seventy and older estab-

lished for planning and policy-making purposes. The department may revise this established ratio using the process outlined in WAC 246-310-370.

(22) "Estimated bed need" means the number of nursing home beds calculated by multiplying the planning area's forecasted resident population by the established ratio for the projection year.

(23) "Estimated bed projection" means the number of nursing home beds calculated by the department statewide or within a planning area, by the end of the projection period.

(24) "Ex parte contact" means any oral or written communication between any person in the certificate of need program or any other person involved in the decision regarding an application for, or the withdrawal of, a certificate of need and the applicant for, or holder of, a certificate of need, any person acting on behalf of the applicant or holder, or any person with an interest regarding issuance or withdrawal of a certificate of need.

(25) "Expenditure minimum" means one million dollars for the twelve-month period beginning with July 24, 1983, adjusted annually by the department according to WAC 246-310-900.

(26) "Health care facility" means hospitals, psychiatric hospitals, nursing homes, kidney disease treatment centers including freestanding dialysis units, ambulatory surgical facilities, continuing care retirement communities, hospices and home health agencies, and includes the facilities when owned and operated by a political subdivision or instrumentality of the state and other facilities as required by federal law and rules, but does not include any health facility or institution conducted by and for those who rely exclusively upon treatment by prayer or spiritual means in accordance with the creed or tenets of any well-recognized church or religious denomination, or any health facility or institution operated for the exclusive care of members of a convent as defined in RCW 84.36.800 or rectory, monastery, or other institution operated for the care of members of the clergy.

(a) In addition, the term "health care facility" does not include any nonprofit hospital:

(i) Operated exclusively to provide health care services for children;

(ii) Which does not charge fees for the services; and

(iii) If not contrary to federal law as necessary to the receipt of federal funds by the state.

(b) In addition, the term "health care facility" does not include a continuing care retirement community which:

(i) Offers services only to contractual residents;

(ii) Provides its residents a contractually guaranteed range of services from independent living through skilled nursing, including some form of assistance with activities of daily living;

(iii) Contractually assumes responsibility for costs of services exceeding the resident's financial responsibility as stated in contract, so that, with the exception of insurance purchased by the retirement community or its residents, no third party, including the medicaid program, is liable for costs of care even if the resident depletes personal resources;

(iv) Offers continuing care contracts and operates a nursing home continuously since January 1, 1988, or obtained a certificate of need to establish a nursing home;

(v) Maintains a binding agreement with the department of social and health services assuring financial liability for services to residents, including nursing home services, shall not fall upon the department of social and health services;

(vi) Does not operate, and has not undertaken, a project resulting in a number of nursing home beds in excess of one for every four living units operated by the continuing care retirement community, exclusive of nursing home beds; and

(vii) Has undertaken no increase in the total number of nursing home beds after January 1, 1988, unless a professional review of pricing and long-term solvency was obtained by the retirement community within the prior five years and fully disclosed to residents.

(27) "Health maintenance organization" means a public or private organization, organized under the laws of the state, which:

(a) Is a qualified health maintenance organization under Title XIII, Section 1310(d) of the Public Health Service Act; or

(b) Provides or otherwise makes available to enrolled participants health care services, including at least the following basic health care services: Usual physician services, hospitalization, laboratory, X ray, emergency and preventive services, and out-of-area coverage;

(c) Is compensated (except for copayments) for the provision of the basic health care services listed in this subsection to enrolled participants by a payment made on a periodic basis without regard to the date the health care services are provided and fixed without regard to the frequency, extent, or kind of health service actually provided; and

(d) Provides physicians' services primarily:

(i) Directly through physicians who are either employees or partners of the organization; or

(ii) Through arrangements with individual physicians or one or more groups of physicians (organized on a group practice or individual practice basis).

(28) "Health service area" means a geographic region appropriate for effective health planning including a broad range of health services.

(29) "Health services" means clinically related (i.e., preventive, diagnostic, curative, rehabilitative, or palliative) services and includes alcoholism, drug abuse, and mental health services.

(30) "Home health agency" means an entity which is, or has declared its intent to become, certified as a provider of home health services in the medicaid or medicare program.

(31) "Hospice" means an entity which is, or has declared its intent to become, certified as a provider of hospice services in the medicaid or medicare program.

(32) "Hospital" means any institution, place, building or agency or distinct part thereof which qualifies or is required to qualify for a license under chapter 70.41 RCW, or as a psychiatric hospital licensed under chapter 71.12 RCW.

(33) "Inpatient" means a person receiving health care services with board and room in a health care facility on a continuous twenty-four-hour-a-day basis.

(34) "Interested persons" means:

(a) The applicant;

(b) Health care facilities and health maintenance organizations providing services similar to the services under review and located in the health service area;

(c) Third-party payers reimbursing health care facilities in the health service area;

(d) Any agency establishing rates for health care facilities and health maintenance organizations in the health service area where the proposed project is to be located;

(e) Health care facilities and health maintenance organizations which, in the twelve months prior to receipt of the application, have submitted a letter of intent to provide similar services in the same planning area;

(f) Any person residing within the geographic area to be served by the applicant; and

(g) Any person regularly using health care facilities within the geographic area to be served by the applicant.

(35) "Licensee" means an entity or individual licensed by the department of health or the department of social and health services. For the purposes of nursing home projects, licensee refers to the operating entity and those persons specifically named in the license application as defined under chapter 388-97 WAC.

(36) "Net estimated bed need" means estimated bed need of a planning area changed by any redistribution as follows:

(a) Adding nursing home beds being redistributed from another nursing home planning area or areas; or

(b) Subtracting nursing home beds being redistributed to another nursing home planning area or areas.

(37) "New nursing home bed" means a nursing home bed never licensed by the state or beds banked under RCW 70.38.115(13), where the applicant must demonstrate need for the previously licensed nursing home beds. This term does not include beds banked under RCW 70.38.111(8).

(38) "Nursing home" means any entity licensed or required to be licensed under chapter 18.51 RCW or distinct part long-term care units located in a hospital and licensed under chapter 70.41 RCW.

(39) "Obligation," when used in relation to a capital expenditure, means the following has been incurred by or on behalf of a health care facility:

(a) An enforceable contract has been entered into by a health care facility or by a person on behalf of the health care facility for the construction, acquisition, lease, or financing of a capital asset; or

(b) A formal internal commitment of funds by a health care facility for a force account expenditure constituting a capital expenditure; or

(c) In the case of donated property, the date on which the gift is completed in accordance with state law.

(40) "Offer," when used in connection with health services, means the health facility provides one or more specific health services.

(41) "Over the established ratio" means the bed-to-population ratio is greater than the statewide current established ratio.

(42) "Person" means an individual, a trust or estate, a partnership, a corporation (including associations, joint stock companies, and insurance companies), the state, or a political subdivision or instrumentality of the state, including a municipal corporation or a hospital district.

(43) "Planning area" means each individual county designated by the department as the smallest geographic area for which nursing home bed need projections are developed, except as follows:

(a) Clark and Skamania counties shall be one planning area.

(b) Chelan and Douglas counties shall be one planning area.

(44) "Predevelopment expenditures" means capital expenditures, the total of which exceeds the expenditure minimum, made for architectural designs, plans, drawings, or specifications in preparation for the acquisition or construction of physical plant facilities. "Predevelopment expenditures" exclude any obligation of a capital expenditure for the acquisition or construction of physical plant facilities and any activity which the department may consider the "commencement of the project" as this term is defined in this section.

(45) "Professional review of continuing care retirement community pricing and long-term solvency" means prospective financial statements, supported by professional analysis and documentation, which:

(a) Conform to Principles and Practices Board Statement Number 9 of the Healthcare Financial Management Association, "Accounting and Reporting Issues Related to Continuing Care Retirement Communities"; and

(b) Project the financial operations of the continuing care retirement community over a period of ten years or more into the future; and

(c) Are prepared and signed by a qualified actuary as defined under WAC 284-05-060 or an independent certified public accountant, or are prepared by management of the continuing care retirement community and reviewed by a qualified actuary or independent certified public accountant who issues a signed examination or compilation report on the prospective financial statements; and

(d) Include a finding by management that the intended expansion project of the continuing care retirement project is financially feasible.

(46) "Project" means all undertakings proposed in a single certificate of need application or for which a single certificate of need is issued.

(47) "Project completion" for projects requiring construction, means the date the facility is licensed. For projects not requiring construction, project completion means initiating the health service.

(48) "Projection period" means the three-year time interval following the projection year.

(49) "Projection year" for nursing home purposes, means the one-year time interval preceding the projection period.

(50) "Public comment period" means the time interval during which the department shall accept comments regarding a certificate of need application.

(51) "Redistribution" means the shift of nursing home bed allocations between two or more planning areas or the shift of nursing home beds between two or more nursing homes.

(52) "Replacement authorization" means a written authorization by the secretary's designee for a person to implement a proposal to replace existing nursing home beds in accordance with the eligibility requirements in WAC 246-310-044 and notice requirements in WAC 246-310-396.

(53) "Resident population" for purposes of nursing home projects, means the number of residents sixty-five years of age and older living within the same geographic area which:

(a) Excludes contract holders living within a recognized CCRC:

(i) With approval for new nursing home beds under WAC 246-310-380(4); or

(ii) Excluded from the definition of a health care facility per RCW 70.38.025(6);

(b) Is calculated using demographic data obtained from:

(i) The office of financial management; and

(ii) Certificate of need applications and exemption requests previously submitted by a CCRC.

(54) "Secretary" means the secretary of the Washington state department of health or the secretary's designee.

(55) "State Health Planning and Resources Development Act" means chapter 70.38 RCW.

(56) "Statewide current ratio" means a bed-to-population ratio computed from the most recent statewide nursing home bed supply and the most recent estimate of the statewide resident population.

(57) "Swing beds" means up to the first five hospital beds designated by an eligible rural hospital which are available to provide either acute care or nursing home services.

(58) "Tertiary health service" means a specialized service meeting complicated medical needs of people and requires sufficient patient volume to optimize provider effectiveness, quality of service, and improved outcomes of care.

(59) "Transition period" means the period of time, not exceeding five years, between the date a CCRC is inhabited by a member, and the date it fully meets the requirements of a CCRC.

(60) "Under the established ratio" means the bed-to-population ratio is less than the statewide current established ratio.

(61) "Undertaking" means any action subject to the provisions of chapter 246-310 WAC.

(62) "Working days" excludes Saturdays, Sundays, and legal holidays observed by the state of Washington. Working days are counted in the same way as calendar days.

[Statutory Authority: RCW 70.38.135. 08-19-018, § 246-310-010, filed 9/5/08, effective 10/6/08; 06-24-050, § 246-310-010, filed 12/1/06, effective 1/1/07. Statutory Authority: Chapter 70.38 RCW. 04-17-054, § 246-310-010, filed 8/10/04, effective 9/10/04; 98-10-053, § 246-310-010, filed 4/29/98, effective 5/30/98; 96-24-052, § 246-310-010, filed 11/27/96, effective 12/28/96. Statutory Authority: RCW 70.38.135 and 70.38.919. 92-02-018 (Order 224), § 246-310-010, filed 12/23/91, effective 1/23/92. Statutory Authority: RCW 43.70.040. 91-02-049 (Order 121), recodified as § 246-310-010, filed 12/27/90, effective 1/31/91. Statutory Authority: Chapter 70.38 RCW. 90-17-086 (Order 081), § 248-19-220, filed 8/17/90, effective 9/17/90; 90-02-093 (Order 023), § 248-19-220, filed 1/3/90, effective 2/3/90. Statutory Authority: RCW 70.38.135. 88-15-021 (Order 2639), § 248-19-220, filed 7/11/88; 86-06-030 (Order 2344), § 248-19-220, filed 2/28/86; 84-07-014 (Order 2082), § 248-19-220, filed 3/14/84; 81-09-012 (Order 210), § 248-19-220, filed 4/9/81, effective 5/20/81. Statutory Authority: Chapter 70.38 RCW. 79-12-079 (Order 188), § 248-19-220, filed 11/30/79.]

WAC 246-310-020 Applicability of chapter 246-310 WAC. (1) The following undertakings shall be subject to the provisions of chapter 246-310 WAC, with the exceptions provided for in this section.

(a) The construction, development, or other establishment of a new health care facility:

(i) No new health care facility may be initiated as a health service of an existing health care facility without certificate of need approval as a new health care facility;

(ii) The provision of services by a home health agency or hospice to a county, on a regular and ongoing basis, that was not previously included in the home health agency or hospice service area shall be considered the development of a new home health agency or hospice.

(b) The sale, purchase, or lease of part or all of any existing hospital licensed under chapter 70.41 RCW or a psychiatric hospital licensed under chapter 71.12 RCW;

(c) A change in bed capacity of a health care facility increasing the total number of licensed beds or redistributing beds among acute care, nursing home care, and boarding home care, as defined under RCW 18.20.020, if the bed redistribution is effective for a period in excess of six months;

(d) Any new tertiary health services offered in or through a health care facility, and not offered on a regular basis by, in, or through such health care facility within the twelve-month period prior to the time the facility will offer such services:

(i) Tertiary services include the following:

(A) Specialty burn services. This is a service designed, staffed, and equipped to care for any burn patient regardless of the severity or extent of the burn. All staff and equipment necessary for any level of burn care are available;

(B) Intermediate care nursery and/or obstetric services level II. Intermediate care nursery is defined in chapter 246-318 WAC. A level II obstetric service is in an area designed, organized, equipped, and staffed to provide a full range of maternal and neonatal services for uncomplicated patients and for the majority of complicated obstetrical problems;

(C) Neonatal intensive care nursery and/or obstetric services level III. Neonatal intensive care nursery is defined in chapter 246-318 WAC. A level III obstetric service is in an area designed, organized, equipped, and staffed to provide services to the few women and infants requiring full intensive care services for the most serious type of maternal-fetal and neonatal illnesses and abnormalities. Such a service provides the coordination of care, communications, transfer, and transportation for a given region. Level III services provide leadership in preparatory and continuing education in prenatal and perinatal care and may be involved in clinical and basic research;

(D) Transplantation of specific solid organs, including, but not limited to, heart, liver, pancreas, lung, small bowel and kidney and including bone marrow. A transplantation service for each solid organ is considered a separate tertiary service;

(E) Open heart surgery and/or elective therapeutic cardiac catheterization including elective percutaneous translumenal coronary angioplasty (PTCA). Open heart surgery includes the care of patients who have surgery requiring the use of a heart lung bypass machine. Therapeutic cardiac catheterization means passage of a tube or other device into the coronary arteries or the heart chambers to improve blood flow. PTCA means the treatment of a narrowing of a coronary artery by means of inflating a balloon catheter at the site of the narrowing to dilate the artery;

(F) Inpatient physical rehabilitation services level I. Level I rehabilitation services are services for persons with usually nonreversible, multiple function impairments of a moderate-to-severe complexity resulting in major changes in the patient's lifestyle and requiring intervention by several rehabilitation disciplines. Services are multidisciplinary,

including such specialists as a rehabilitation nurse; and physical, occupational, and speech therapists; and vocational counseling; and a physiatrist. The service is provided in a dedicated unit with a separate nurses station staffed by nurses with specialized training and/or experience in rehabilitation nursing. While the service may specialize (i.e., spinal cord injury, severe head trauma, etc.), the service is able to treat all persons within the designated diagnostic specialization regardless of the level of severity or complexity of the impairments and include the requirements as identified in chapter 246-976 WAC relating to level I trauma rehabilitation services;

(G) Specialized inpatient pediatric services. The service is designed, staffed, and equipped to treat complex pediatric cases for more than twenty-four hours. The service has a staff of pediatric specialists and subspecialists.

(ii) The department shall review, periodically revise, and update the list of tertiary services. The department shall change the tertiary services list following the procedures identified in WAC 246-310-035;

(iii) The offering of an inpatient tertiary health service by a health maintenance organization or combination of health maintenance organizations is subject to the provisions under chapter 246-310 WAC unless the offering is exempt under the provisions of RCW 70.38.111.

(e) Any increase in the number of dialysis stations in a kidney disease center;

(f) Any capital expenditure in excess of the expenditure minimum for the construction, renovation, or alteration of a nursing home. However, a capital expenditure, solely for any one or more of the following, which does not substantially affect patient charges, is not subject to certificate of need review:

(i) Communications and parking facilities;

(ii) Mechanical, electrical, ventilation, heating, and air conditioning systems;

(iii) Energy conservation systems;

(iv) Repairs to, or the correction of, deficiencies in existing physical plant facilities necessary to maintain state licensure, however, other additional repairs, remodeling, or replacement projects that are not related to one or more deficiency citations and are not necessary to maintain state licensure are not exempt from certificate of need review except as otherwise permitted by (f)(vi) of this subsection or RCW 70.38.115(13);

(v) Acquisition of equipment, including data processing equipment, not for use in the direct provision of health services;

(vi) Construction or renovation at an existing nursing home involving physical plant facilities, including administrative, dining, kitchen, laundry, and therapy areas, or support facilities, by an existing licensee who has operated the beds for at least one year;

(vii) Acquisition of land;

(viii) Refinancing of existing debt; and

(ix) Nursing home project granted a replacement authorization under WAC 246-310-044.

(g) Any expenditure for the construction, renovation, or alteration of a nursing home or change in nursing home services in excess of the expenditure minimum made in preparation for any undertaking subject to the provisions under chapter 246-310 WAC and any arrangement or commitment made for financing such undertaking;

(h) No person may divide a project in order to avoid review requirements under any of the thresholds specified under this section; and

(i) The department may issue certificates of need authorizing only predevelopment expenditures, without authorizing any subsequent undertaking for which the predevelopment expenditures are made.

(2) No person shall engage in any undertaking subject to certificate of need review unless:

(a) A certificate of need authorizing such undertaking is issued and remains valid; or

(b) An exemption is granted in accordance with the provisions of this chapter.

(3) If a nursing home or portion of a nursing home constructed or established under the authority of a certificate of need granted from the pool of nursing home beds for ethnic minorities according to the provisions of WAC 246-310-135 is sold or leased within ten years to a party not eligible for an award of such beds under the provisions of WAC 246-310-136(2):

(a) The purchaser or lessee may not operate those beds as nursing home beds without first obtaining a certificate of need for new beds; and

(b) The beds that were awarded from the special pool shall be returned to that pool.

[Statutory Authority: Chapter 70.38 RCW. 96-24-052, § 246-310-020, filed 11/27/96, effective 12/28/96. Statutory Authority: RCW 70.38.135 (3)(c). 92-05-057 (Order 244), § 246-310-020, filed 2/14/92, effective 3/16/92. Statutory Authority: RCW 70.38.135 and 70.38.919. 92-02-018 (Order 224), § 246-310-020, filed 12/23/92, effective 1/23/93. Statutory Authority: RCW 43.70.040. 91-02-049 (Order 121), recodified as § 246-310-020, filed 12/27/90, effective 1/31/91. Statutory Authority: Chapter 70.38 RCW. 90-21-028 (Order 082), § 248-19-231, filed 10/9/90, effective 10/9/90; 89-23-098 (Order 019), § 248-19-231, filed 11/21/89, effective 12/22/89.]

WAC 246-310-035 Tertiary services identification. (1) The criteria in this section shall be used as guidelines when examining services to determine whether the service is considered a tertiary service.

(2) In determining whether a service is a tertiary service the department shall consider the degree to which the service meets the following criteria:

(a) Whether the service is dependent on the skills and coordination of specialties and subspecialties. Including, but not limited to, physicians, nurses, therapists, social workers;

(b) Whether the service requires immediate access to an acute care hospital;

(c) Whether the service is characterized by relatively few providers;

(d) Whether the service is broader than a procedure;

(e) Whether the service has a low use rate;

(f) Whether consensus supports or published research shows that sufficient volume is required to impact structure, process, and outcomes of care; and

(g) Whether the service carries a significant risk or consequence.

(3) Periodically the department shall request review of proposed changes to the list of tertiary services identified in WAC 246-310-020. The periodic review shall be conducted as follows:

(a) The department shall send notice to all persons who have sent the certificate of need program a written request to be notified of the annual review of tertiary services.

(b) The notice shall contain the following:

(i) Identification of the thirty-day period during which written comments may be received. This thirty-day period shall be called the comment period;

(ii) The criteria listed in this section; and

(iii) The name and address of the person in the department to whom written comments are to be addressed.

(c) The written comments must address whether a service meets or partially meets the criteria in this section.

(d) Within sixty days after the close of the comment period the department shall determine whether to propose any changes to the list of tertiary services in chapter 246-310 WAC. This sixty-day period shall be called the consideration period.

(e) During the consideration period information may be exchanged between the department and persons proposing changes to the list of tertiary services in chapter 246-310 WAC.

(4) The department shall convene a technical work group at least every three years to do the following:

(a) Review the criteria listed in this section to determine whether the criteria appropriately define a tertiary service; and

(b) Propose any necessary changes to the list of tertiary services in WAC 246-310-020.

[Statutory Authority: Chapter 70.38 RCW. 96-24-052, § 246-310-035, filed 11/27/96, effective 12/28/96. Statutory Authority: RCW 70.38.135 and 70.38.919. 92-02-018 (Order 224), § 246-310-035, filed 12/23/91, effective 1/23/92.]

WAC 246-310-040 Exemptions from requirements for a certificate of need for health maintenance organizations. (1) Provisions for exemptions.

The secretary's designee shall grant an exemption from the requirements for a certificate of need for the offering of an inpatient institutional health service, the acquisition of major medical equipment for the provision of an institutional health service, or the obligation of a capital expenditure in excess of the expenditure minimum for the provision of an inpatient institutional health service to any entity meeting the eligibility requirements set forth in subsection (1)(a) of this section for such an exemption and submitting an application for an exemption meeting the requirements of subsection (1)(b) of this section.

(a) Eligibility requirements.

To be eligible for an exemption from the requirements for a certificate of need for the offering of an inpatient institutional health service, the acquisition of major medical equipment for the provision of an inpatient institutional health service, or the obligation of a capital expenditure in excess of the expenditure minimum for the provision of an institutional health service, an applicant entity shall be one of the following:

(i) A health maintenance organization or a combination of health maintenance organizations if:

(A) The organization or combination of organizations has, in the service area of the organization or the service areas of the organizations in the combination, an enrollment of at least fifty thousand individuals;

(B) The facility in which the service will be provided is or will be geographically located so the service will be reasonably accessible to such enrolled individuals; and

(C) At least seventy-five percent of the patients reasonably expected to receive the institutional health service will be individuals enrolled in such organization or organizations in the combination;

(ii) A health care facility if:

(A) The facility primarily provides or will provide inpatient health services;

(B) The facility is or will be controlled, directly or indirectly, by a health maintenance organization or a combination of health maintenance organizations which has, in the service area of the organization or service areas of the organizations in the combination, an enrollment of at least fifty thousand individuals;

(C) The facility is or will be geographically located so the service will be reasonably accessible to such enrolled individuals; and

(D) At least seventy-five percent of the patients reasonably expected to receive the institutional health service will be individuals enrolled with such organization or organizations in the combination; or

(iii) A health care facility (or portion thereof) if:

(A) The facility is or will be leased by a health maintenance organization or combination of health maintenance organizations which has, in the service area of the organization or the service areas of the organizations in the combination, an enrollment of at least fifty thousand individuals and, on the date the application for an exemption is submitted, at least fifteen years remain in the term of the lease;

(B) The facility is or will be geographically located so the service will be reasonably accessible to such enrolled individuals; and

(C) At least seventy-five percent of the patients reasonably expected to receive the institutional health service will be individuals enrolled with such organization;

(b) Requirements for an application for exemption.

An application for an exemption from a certificate of need shall meet the following requirements:

(i) The application for an exemption shall have been submitted at least thirty days prior to the offering of the institutional health service, acquisition of major medical equipment, or obligation of the capital expenditure to which the application pertains. A copy of the application for the exemption shall be sent simultaneously to the appropriate advisory review agencies.

(ii) A complete application shall be submitted in such form and manner as has been prescribed by the department. The information which the department prescribes shall include:

(A) All of the information required to make a determination that the applicant entity qualifies in accordance with subsection (1)(a) of this section; and

(B) A complete description of the offering, acquisition, or obligation to which the application pertains.

(2) Action on an application for exemption.

(a) Within thirty days after receipt of a complete application for exemption from certificate of need requirements, the

department shall send the applicant a written notice the exemption has been granted or denied. A copy of such written notice shall be sent simultaneously to the appropriate advisory review agencies.

(b) The secretary's designee shall deny an exemption if he or she finds the applicant has not met the requirements of subsections (1)(a) and (b) of this section. Written notice of the denial shall include the specific reasons for the denial.

(c) In the case of an application for a proposed health care facility (or portion thereof) which has not begun to provide institutional health services on the date the application for an exemption is submitted, the secretary's designee shall grant the exemption if he or she determines the facility (or portion thereof) will meet the applicable requirements of subsection (1)(a) of this section when the facility first provides health services.

(d) If the secretary's designee fails to grant or deny an exemption in accordance with the provisions of this section within thirty days after receipt of a complete application for such exemption, the applicant for the exemption may seek a writ of mandamus from superior court pursuant to chapter 7.16 RCW.

(3) Subsequent sale, lease, or acquisition of exempt facilities or equipment.

Subsequent sale, lease, or acquisition of exempt health care facilities (or portions thereof) or medical equipment for which an exemption was granted under the provisions of subsection (2) of this section, any acquisition of a controlling interest in such facility or equipment, and any use of such facility or equipment by a person other than the one to whom the exemption was granted, shall meet one of the following conditions:

(a) A certificate of need for the purchase, lease, acquisition of controlling interest in, or use of such facility or equipment, shall have been applied for and issued by the department; or

(b) The department shall have determined, after receipt of an application for an exemption, submitted in accordance with subsection (1) of this section, that the requirements of either subsection (1)(a)(i) or subsection (1)(a)(ii)(A) and (B) are met.

(4) The method of payment for services (i.e., prepaid or fee for service) shall not be considered relevant in determining whether an undertaking of a health maintenance organization qualifies for an exemption under this section.

[Statutory Authority: RCW 43.70.040. 91-02-049 (Order 121), recodified as § 246-310-040, filed 12/27/90, effective 1/31/91. Statutory Authority: RCW 70.38.135. 86-06-030 (Order 2344), § 248-19-405, filed 2/28/86; 81-09-012 (Order 210), § 248-19-405, filed 4/9/81, effective 5/20/81.]

WAC 246-310-041 Exemption from requirements for a certificate of need for continuing care retirement communities' nursing home projects. (1) Provisions for exemptions.

The secretary's designee shall grant an exemption from the requirements for a certificate of need for the construction, development, or other establishment of a nursing home, or the addition of beds to an existing nursing home, that is owned and operated by a continuing care retirement community meeting the eligibility requirements of (a) of this subsection and submitting an application for an exemption meeting the requirements of (b) of this subsection.

(a) Eligibility requirements. To be eligible for an exemption under this section, an applicant entity shall demonstrate that:

(i) Nursing home services will be offered only to contractual residents;

(ii) Residents will be provided a contractually guaranteed range of services from independent living through skilled nursing, including some assistance with daily living activities;

(iii) The facility contractually assumes responsibility for the cost of services exceeding the residents financial responsibility under the contract, so that no third party, including the medicaid program, is liable for the costs of care, even if the resident depletes his or her personal resources. This exclusion does not pertain to insurance purchased by the retirement community or its residents;

(iv) The entity has offered continuing care contracts and has operated a nursing home continuously since January 1, 1988, or has obtained a certificate of need to establish a nursing home;

(v) A binding agreement is maintained with the state assuring that financial liability for services to residents, including nursing home services, will not fall upon the state;

(vi) It does not operate, and has not undertaken a project that would result in the ratio of nursing home beds to independent living units exceeding one nursing home bed for every four independent living units, exclusive of nursing home beds; and

(vii) It has obtained a professional review of pricing and long-term solvency of the applicant entity within the prior five years which was fully disclosed to residents.

(b) Requirements for an application for exemption. An application for an exemption from a certificate of need shall meet the following requirements:

(i) The application for an exemption shall be submitted at least thirty days prior to the commencement of construction, submitting an application for nursing home licensure, or commencing operation of a nursing home, whichever occurs first;

(ii) A complete application shall be submitted in such form and manner as has been prescribed by the department. The information which the department prescribes shall include:

(A) All of the information required to make a determination that the applicant entity qualifies in accordance with (a) of this subsection; and

(B) A complete description of the construction, development or other establishment of a nursing home, or the addition of nursing home beds to which the exemption application pertains.

(2) Action on an application for exemption.

(a) Within thirty days after receipt of a complete application for exemption from certificate of need requirements, the department shall send the applicant a written notice whether the exemption has been granted or denied.

(b) The secretary's designee shall deny an exemption if it is determined the applicant has not met the requirements of subsection (1)(a) and (b) of this section. Written notice of the denial shall include the specific reasons for the denial.

(3) Subsequent sale, lease, acquisition, or use of, part or all, of an exempt continuing care retirement community.

Subsequent sale, lease, acquisition or use of exempt continuing care retirement communities shall require prior certificate of need approval to qualify for licensure as a nursing home unless the department determines such sale, lease, acquisition, or use is by a continuing care retirement community that meets the conditions identified in subsection (1)(a) and (b) of this section.

[Statutory Authority: Chapter 70.38 RCW. 96-24-052, § 246-310-041, filed 11/27/96, effective 12/28/96.]

WAC 246-310-042 Rural hospital and rural health care facility exemptions from certificate of need review. (1) Provisions for exemptions of qualified rural hospitals and rural health care facilities.

The secretary's designee shall grant an exemption from the requirement for a certificate of need for an increase in licensed bed capacity to a rural hospital meeting the eligibility requirements of (a) of this subsection and submitting an application for an exemption meeting the requirements of (c) of this subsection. The secretary's designee shall grant an exemption from the requirement for a certificate of need for the construction, development, or other establishment of a new hospital to a rural health care facility meeting the eligibility requirements of (b) of this subsection and submitting an application for an exemption meeting the requirements of (c) of this subsection.

(a) Eligibility requirements for a rural hospital exemption. To be eligible for an exemption from the requirements under this section, a rural hospital, shall demonstrate that:

(i) The applicant hospital meets the definition of a rural hospital as defined by the department;

(ii) The request is being made within three years of the date the beds licensed under chapter 70.41 RCW were reduced;

(iii) The increase in licensed beds will result in no more than had previously been licensed; and

(iv) The rural hospital became a rural primary care hospital under the provisions of Part A Title XVIII of the Social Security Act Section 1820, 42 U.S.C., 1395c et seq. after its licensure reduction.

(b) Eligibility requirements for a rural health care facility exemption. To be eligible for an exemption from the requirements under this section, a rural health care facility, shall demonstrate that:

(i) The applicant facility meets the definition of a rural health care facility under RCW 70.175.100;

(ii) The applicant facility was previously licensed as a hospital under chapter 70.41 RCW;

(iii) The request is being made within three years of the effective date of the rural health care facility license;

(iv) There will be no increase in the number of beds previously licensed under chapter 70.41 RCW and there is no redistribution in the number of beds used for acute care or long-term care;

(v) The rural health care facility has been in continuous operation; and

(vi) The rural health care facility has not been purchased or leased.

(c) Requirements for an application for exemption by a rural hospital or rural health care facility. An application for an exemption from a certificate of need shall meet the following requirements:

(i) The application for a rural hospital exemption shall be submitted at least thirty days prior to the effective date of the hospital license that increases the number of beds at the rural hospital or at the time an application is made to the department to increase the number of licensed beds at the rural hospital, whichever occurs first.

(ii) The application for a rural health care facility exemption shall be submitted at least thirty days prior to the effective date of the hospital license that converts the rural health care facility back to a hospital or at the time an application is made to the department to convert back to a hospital, whichever occurs first;

(iii) A complete application shall be submitted in such form and manner as has been prescribed by the department. The information which the department prescribes shall include:

All of the information required to make a determination that the rural hospital qualifies in accordance with (a) of this subsection or that the rural health care facility qualifies with (b) of this subsection.

(2) Action on an application for exemption by a rural hospital or rural health care facility.

(a) Within thirty days after receipt of a complete application for exemption from certificate of need requirements, the department shall send the applicant a written notice whether the exemption request has been granted or denied.

(b) The secretary's designee shall deny an exemption if it is determined the applicant entity has not met the requirements of subsection (1)(a), (b), or (c) of this section. Written notice of the denial shall include the specific reasons for the denial.

[Statutory Authority: Chapter 70.38 RCW. 96-24-052, § 246-310-042, filed 11/27/96, effective 12/28/96.]

WAC 246-310-043 Exemption from requirements for a certificate of need for nursing home bed conversions to alternative use. Provisions for exemptions.

The secretary's designee shall grant an exemption from the requirements for a certificate of need for the conversion of nursing home beds banked under the provisions of RCW 70.38.111(8) by a nursing home meeting the eligibility requirements of this section and submitting an application for an exemption which demonstrates the eligibility requirements have been met.

(1) Eligibility requirements. To be eligible for an exemption under this section, an applicant shall demonstrate that:

(a) The nursing home voluntarily reduced its licensed capacity to provide one or more alternative services, as identified in RCW 70.38.111(8), to reduce the number of beds per room to one or two in the nursing home, or otherwise enhance the quality of life for residents, as defined in WAC 246-310-010;

(b) The beds to be converted back to nursing home beds are to be licensed in the original facility;

(c) The nursing home has remained in continuous operation and has not been sold or leased during the bed banking time interval;

(d) Notice of intent to bank the nursing home beds was given as required by WAC 246-310-395; and

(e) The bed conversion occurs within four years of the bed banking, unless the department has granted a four year extension under WAC 246-310-580 in which case the bed conversion must occur within eight years of the original bed banking.

(2) Nursing homes proposing to establish, construct, or otherwise develop alternative services subject to certificate of need review under the provisions of RCW 70.38.105 shall obtain certificate of need approval prior to providing such services.

[Statutory Authority: Chapter 70.38 RCW. 96-24-052, § 246-310-043, filed 11/27/96, effective 12/28/96.]

WAC 246-310-044 Exemption from requirements for a certificate of need for nursing home bed replacements. (1) Provisions for exemptions.

The secretary's designee shall grant a replacement authorization exempting a facility from the requirements for a certificate of need for the replacement of existing nursing home beds under the provisions of RCW 70.38.115 (13)(a) by a nursing home meeting the eligibility requirements of this section and submitting an application, following the notice requirements in WAC 246-310-397, which demonstrates the eligibility requirements have been met.

(2) Nursing home construction or renovation projects for the purpose of replacing nursing home beds within the same planning area, and which meet the eligibility requirements in subsection (3) of this section and the notification requirements in WAC 246-310-397, shall not be subject to certificate of need review. Projects meeting the above requirements would include, but are not limited to:

(a) Replacement of an existing facility at the same location;

(b) Construction of a new nursing home or facilities for the purpose of replacing beds in the same planning area;

(c) Renovation of an existing facility for the purpose of replacing beds; and

(d) Redistribution of all or a portion of existing beds to an existing or new nursing home or facilities in the same planning area.

(3) Eligibility requirements. To be eligible for an exemption under this section, an applicant shall demonstrate that:

(a) The applicant is the existing licensee (as defined in WAC 246-310-010) of all affected facilities and has operated the beds at all affected facilities for at least one year immediately preceding the replacement exemption request fulfilling the requirements as specified in WAC 246-310-397;

(b) The applicant will be the licensee at all affected facilities at the completion of the project except as allowed under the provisions of RCW 70.38.115(14);

(c) The project will not increase the total bed capacity of a planning area; and

(d) The nursing home beds being replaced will not provide nursing home services once the replacement beds are licensed.

(4) Projects must be commenced within two years following replacement authorization with a possibility of one six-month extension provided that substantial and continuing progress had been made toward commencement of the project as referenced in WAC 246-310-580.

[Statutory Authority: Chapter 70.38 RCW. 98-10-053, § 246-310-044, filed 4/29/98, effective 5/30/98; 96-24-052, § 246-310-044, filed 11/27/96, effective 12/28/96.]

WAC 246-310-045 Exemption from certificate of need requirements for a change in bed capacity at a residential hospice care center. (1) A change in bed capacity at a residential hospice care center shall not be subject to certificate of need review under this chapter if the department determined prior to June 1994 that the construction, development, or other establishment of the residential hospice care center was not subject to certificate of need review under this chapter.

(2) For purposes of this section, a "residential hospice care center" means any building, facility, place, or equivalent that opened in December 1996 and is organized, maintained, and operated specifically to provide beds, accommodations, facilities, and services over a continuous period of twenty-four hours or more for palliative care to two or more individuals, not related to the operator, who are diagnosed as being in the latter stages of an advanced disease that is expected to lead to death.

[Statutory Authority: Chapter 70.38 RCW. 98-17-099, § 246-310-045, filed 8/19/98, effective 9/19/98.]

WAC 246-310-050 Applicability determination. (1) Any person wanting to know whether an action the person is considering is subject to certificate of need requirements (chapter 246-310 WAC) may submit a written request to the certificate of need program requesting a formal determination of applicability of the certificate of need requirements to the action.

(a) The written request shall include the nature and extent of any construction, changes in services, and the estimated total costs of the action.

(2) The department may request any additional written information that is reasonably necessary to make an applicability determination on the action.

(3) The department shall respond in writing to a request for an applicability determination within thirty days of receipt of the complete information needed for such determination. In the written response, the department shall state the reasons for its determination that the action is or is not subject to certificate of need requirements.

(4) Information or advice given by the department as to whether an action is subject to certificate of need requirements shall not be considered an applicability determination unless it is in written form in response to a written request submitted in accordance with provisions of this section.

(5) A written applicability determination on an action in response to a written request and based on written information shall be binding upon the department: Provided, The nature, extent, or cost of the action does not significantly change.

[Statutory Authority: Chapter 70.38 RCW. 98-10-053, § 246-310-050, filed 4/29/98, effective 5/30/98; 96-24-052, § 246-310-050, filed 11/27/96, effective 12/28/96. Statutory Authority: RCW 70.38.135 and 70.38.919. 92-02-018 (Order 224), § 246-310-050, filed 12/23/91, effective 1/23/92. Statutory Authority: RCW 43.70.040. 91-02-049 (Order 121), recodified as § 246-310-050, filed 12/27/90, effective 1/31/91. Statutory Authority: RCW

70.38.135. 86-06-030 (Order 2344), § 248-19-240, filed 2/28/86; 81-09-012 (Order 210), § 248-19-240, filed 4/9/81, effective 5/20/81. Statutory Authority: Chapter 70.38 RCW. 79-12-079 (Order 188), § 248-19-240, filed 11/30/79.]

WAC 246-310-080 Letter of intent. Any person planning to propose an undertaking subject to certificate of need review shall submit a letter of intent as follows:

(1) The letter of intent shall include the following information:

(a) A description of the services proposed;

(b) The estimated cost of the proposed project;

(c) An identification of the service area.

(2) A letter of intent shall be valid for six months after the receipt of the letter by the department. If the applicant does not submit an application for the project as described in the letter within this time frame, a new letter of intent shall be required before the department accepts an application.

(3) In the event that the application proposes a project that is significantly different than that proposed in the letter of intent, the department shall consider the application the letter of intent and no further action shall be taken until the end of the thirty-day letter of intent period.

(4) Expedited or regular review. Any person proposing an undertaking subject to an expedited or regular review shall submit a letter of intent at least thirty days prior to the submission of the application.

(5) Concurrent review.

(a) Any person proposing undertakings subject to concurrent review shall submit a letter of intent according to the applicable schedule.

(b) Within thirty days following the last day of the letter of intent submittal period, the department shall determine which of the proposed undertakings compete with other proposed undertakings. Two or more undertakings within the same concurrent review cycle may be competing when the proposed undertaking would be located in the same county or planning area and/or the undertakings propose nursing home beds to be allocated from the same statewide continuing care retirement community (CCRC) bed pool as defined in WAC 246-310-380. The department shall notify applicants of competing undertakings.

(c) In the event the department determines an application submitted under concurrent review is not competing, the department may convert the review to a regular review.

[Statutory Authority: Chapter 70.38 RCW. 98-10-053, § 246-310-080, filed 4/29/98, effective 5/30/98; 96-24-052, § 246-310-080, filed 11/27/96, effective 12/28/96. Statutory Authority: RCW 70.38.135 and 70.38.919. 92-02-018 (Order 224), § 246-310-080, filed 12/23/91, effective 1/23/92. Statutory Authority: RCW 43.70.040. 91-02-049 (Order 121), recodified as § 246-310-080, filed 12/27/90, effective 1/31/91. Statutory Authority: RCW 70.38.115. 87-10-023 (Order 2487), § 248-19-270, filed 5/1/87. Statutory Authority: RCW 70.38.135. 86-06-030 (Order 2344), § 248-19-270, filed 2/28/86; 81-09-012 (Order 210), § 248-19-270, filed 4/9/81, effective 5/20/81. Statutory Authority: Chapter 70.38 RCW. 79-12-079 (Order 188), § 248-19-270, filed 11/30/79.]

WAC 246-310-090 Submission and withdrawal of applications. (1) General.

(a) A person proposing an undertaking subject to review shall submit a certificate of need application in such form and manner and containing such information as the department has prescribed and published as necessary to such a certificate of need application.

(i) The information, which the department prescribes and publishes as required for a certificate of need application, shall be limited to the information necessary for the department to perform a certificate of need review and shall vary in accordance with and be appropriate to the category of review or the type of proposed project: Provided however, That the required information shall include what is necessary to determine whether the proposed project meets applicable criteria and standards.

(ii) Information regarding a certificate of need application submitted by an applicant after the department has given "notification of the beginning of review" in the manner prescribed by WAC 246-310-170 shall be submitted in writing to the department.

(iii) Except as provided in WAC 246-310-190, no information regarding a certificate of need application submitted by an applicant after the conclusion of the public comment period shall be considered by the department in reviewing and taking action on a certificate of need application. An exception to this rule shall be made when, during its final review period, the department finds an unresolved pivotal issue requires submission of further information by an applicant and the applicant agrees to an extension of the review period in order to resolve this issue as provided for in WAC 246-310-160 (2)(b), 246-310-150 (2)(c), and 246-310-140(4). The department shall give public notice of such request for additional information through the same newspaper in which the "notification of beginning of review" for the project was published. The notice shall identify the project, the nature of the unresolved issue and the information requested of the applicant, and shall state the period of time allowed for receipt of written comments from interested persons.

(b) A person submitting a certificate of need application shall submit one original and one copy of the application to the certificate of need program of the department.

(c) On or before the last day of the applicable screening period for a certificate of need application, as prescribed in subsections (2) and (3) of this section, the department shall send a written notice to the person submitting the application stating whether or not the application has been declared complete. If an application has been found to be incomplete, the notice from the department shall specifically identify the portions of the application where the information provided has been found to be insufficient or indefinite and request supplemental information needed to complete the application.

(d) The department shall not request any supplemental information of a type not prescribed and published as being necessary to a certificate of need application for the type of project being proposed. The department may request clarification of information provided in the application.

(e) A response to the department's request for information to supplement an incomplete application shall be written.

(2) Screening and prereview activities.

(a) The department shall, within a fifteen working-day period for emergency, expedited, and regular reviews, screen the application to determine whether the information provided in the application is complete and as explicit as is necessary for a certificate of need review. This screening period

shall begin on the first day after the department has received the application. In the event that the application is lacking significant information relating to the review criteria, the department may, upon notification, reserve the right to screen the application again upon receipt of the applicant's original response unless the applicant exercises option (c)(iii) of this subsection.

(b) The department shall return an incomplete certificate of need application to the person submitting the application if the department has not received a response to a request for the supplemental information sent in accordance with subsection (1)(c) of this section within forty-five days for emergency, expedited, and regular reviews unless extended by mutual agreement, and within one month for concurrent review after such request was sent.

(c) For emergency, expedited, and regular reviews, a person submitting a response to the department's request for supplemental information to complete a certificate of need application within forty-five days after the request was sent by the department, in accordance with subsection (1)(c) of this section, shall have the right to exercise one of the following options:

(i) Submission of written supplemental information and a written request that the information be screened and the applicant be given opportunity to submit further supplemental information if the department determines that the application is still incomplete;

(ii) Submission of written supplemental information with a written request that review of the certificate of need application begin without the department notifying the applicant as to whether the supplemental information is adequate to complete the application; or

(iii) Submission of a written request that the application be reviewed without supplemental information.

(d) The department shall not accept responses to the department's screening letters later than ten days after the department has given "notification of beginning of review."

(e) For concurrent review a person submitting a response to the department's request for supplemental information to complete a certificate of need application within one month after the request was sent by the department, in accordance with subsection (1)(c) of this section, shall submit written supplemental information or a written request that the incomplete application be reviewed. The review shall begin in accordance with the published schedule.

(f) After receipt of a request for review of a certificate of need application, submitted in accordance with subsection (2)(c)(ii) or (iii) of this section, the department shall give notification of the beginning of review in the manner prescribed for a complete application in WAC 246-310-170.

(g) If a person requests the screening of supplemental information in accordance with subsection (2)(c)(i) of this section, such screening shall be carried out in the same number of days and in the same manner as required for an application in accordance with the provisions of subsection (1)(c) and (2)(a) of this section. The process of submitting and screening supplemental information may be repeated until the department declares the certificate of need application complete, the applicant requests that review of the incomplete application begin, or the one hundred twentieth day after the beginning of the first screening period for the application, whichever occurs first. The department shall return an application to the applicant if it is still incomplete on the one hundred twentieth day after the beginning of the first screening period and the applicant has not requested review of such incomplete application.

(3) Withdrawal of applications.

A certificate of need application shall be withdrawn from the certificate of need process if the department receives a written request for withdrawal of the application from the person submitting the application at any time before final action on such application has been taken by the secretary's designee.

(4) Resubmission of applications withdrawn or returned as incomplete.

A submission of a new certificate of need application shall be required for a certificate of need review of any undertaking for which the department has returned an incomplete application in accordance with subsection (2)(b) of this section, or for which a certificate of need application has been withdrawn in accordance with subsection (3) of this section. The content of the application should be updated as necessary before resubmission.

[Statutory Authority: Chapter 70.38 RCW. 98-10-053, § 246-310-090, filed 4/29/98, effective 5/30/98; 96-24-052, § 246-310-090, filed 11/27/96, effective 12/28/96. Statutory Authority: RCW 70.38.135 and 70.38.919. 92-02-018 (Order 224), § 246-310-090, filed 12/23/91, effective 1/23/92. Statutory Authority: RCW 43.70.040. 91-02-049 (Order 121), recodified as § 246-310-090, filed 12/27/90, effective 1/31/91. Statutory Authority: RCW 70.38.135. 86-06-030 (Order 2344), § 248-19-280, filed 2/28/86; 81-09-012 (Order 210), § 248-19-280, filed 4/9/81, effective 5/20/81. Statutory Authority: Chapter 70.38 RCW. 79-12-079 (Order 188), § 248-19-280, filed 11/30/79.]

WAC 246-310-100 Amendment of certificate of need applications. (1) The following changes to an application may be considered by the department an amendment of an application:

(a) The addition of a new service or elimination of a service included in the original application.

(b) The expansion or reduction of a service included in the original application.

(c) An increase in the bed capacity.

(d) A change in the capital cost of the project or the method of financing the project.

(e) A significant change in the rationale used to justify the project.

(f) A change in the applicant.

(2) Direct responses to screening questions will not be considered amendments.

(3) Amendments to certificate of need applications shall include information and documentation consistent with the requirements of WAC 246-310-090 (1)(a)(i) and (b).

(4) Application for emergency review. If an applicant changes an application during the screening period, the department shall determine whether the changed application constitutes a new application. An application changed during the review period shall be considered a new application.

(5) An application for expedited or regular review may be changed during the screening period or the public comment period.

(a) If an application is changed during the screening period or within the ten-day grace period following the

beginning of review, the department shall determine whether the changed application constitutes an amended application. The applicant may submit written information to the department within five working days of receiving the department's determination indicating why the change should not be considered an amendment.

(b) The department shall respond within five working days of receiving the applicant's written information concerning whether the application changes constitute an amendment.

(c) When an application has been amended, the review period may be extended for a period not to exceed forty-five days.

(6) An application for concurrent review may be amended according to the following provisions:

(a) The department shall determine when an application has been amended.

(b) An amendment may be made through the first forty-five days of the concurrent review process. When the department determines an applicant has amended an application, the review period for all applications reviewed concurrently shall be extended by a single thirty-day period. The forty-five days for amendments shall be divided as follows:

(i) During the first thirty days an applicant or applicants may amend an application one or more times.

(ii) When an amendment has been made to an application in the first thirty days, all applicants may make one final amendment during the remaining fifteen days of the forty-five day period.

(iii) The department shall send written notice to all applicants when an amendment to an application is submitted.

(iv) If no amendment has been made to any application through the thirty-day period, no amendments may be made during the subsequent fifteen-day period.

(c) Any information submitted after the amendment period which has not been requested in writing by the department shall be returned to the person submitting the information and shall not be considered in the review of the application.

[Statutory Authority: Chapter 70.38 RCW. 96-24-052, § 246-310-100, filed 11/27/96, effective 12/28/96. Statutory Authority: RCW 70.38.135 and 70.38.919. 92-02-018 (Order 224), § 246-310-100, filed 12/23/91, effective 1/23/92. Statutory Authority: RCW 43.70.040. 91-02-049 (Order 121), recodified as § 246-310-100, filed 12/27/90, effective 1/31/91. Statutory Authority: RCW 70.38.135. 86-06-030 (Order 2344), § 248-19-295, filed 2/28/86.]

WAC 246-310-110 Categories of review. (1) In the review of any certificate of need application, one of the following review processes shall be used: Regular review, concurrent review, emergency review, or expedited review.

(2) Determination of review process.

The department shall determine which review process will be used in the review of a given certificate of need application.

(a) Emergency review.

(i) An emergency review may, with the written consent of the appropriate advisory review agencies, be conducted when an immediate capital expenditure is required in order for a health care facility to maintain or restore basic and essential patient services.

(ii) The department may determine an application submitted for emergency review does not qualify for such review. Such a determination and notification to the applicant shall be made within five days after receipt of the application. When the department makes a determination that an application is not subject to emergency review procedures, the application will be reviewed under another review process appropriate for the type of undertaking proposed. The department will notify the applicant of the other process under which the application will be reviewed.

(b) Expedited review.

An expedited review shall be conducted on a certificate of need application for the following:

(i) Projects proposed for the correction of deficiencies as described in WAC 246-310-480, except projects for the repair to or correction of deficiencies in the physical plant necessary to maintain state licensure, which are exempt from review by the provisions of WAC 246-310-020, if they do not substantially affect patient charges.

(ii) Demonstration or research projects: Provided, That such projects do not involve a change in bed capacity or the provision of a new tertiary health service.

(iii) Acquisition of an existing health care facility.

(iv) Projects limited to predevelopment expenditures.

(c) Regular review process.

The regular review process shall be used for any application unless the department has determined the emergency, expedited, or concurrent review process will be used in the review of such application. The regular review process will also be used to review applications for projects solely for the purposes listed in WAC 246-310-020 determined by the department to substantially affect patient charges, unless the project qualifies for an expedited review under subsection (2)(a)(i) of this section.

(d) Concurrent review process.

The concurrent review process shall be used for all applications determined to be competing in accordance with WAC 246-310-120.

[Statutory Authority: Chapter 70.38 RCW. 96-24-052, § 246-310-110, filed 11/27/96, effective 12/28/96. Statutory Authority: RCW 70.38.135 and 70.38.919. 92-02-018 (Order 224), § 246-310-110, filed 12/23/91, effective 1/23/92. Statutory Authority: RCW 43.70.040. 91-02-049 (Order 121), recodified as § 246-310-110, filed 12/27/90, effective 1/31/91. Statutory Authority: RCW 70.38.135. 86-06-030 (Order 2344), § 248-19-300, filed 2/28/86; 81-09-012 (Order 210), § 248-19-300, filed 4/9/81, effective 5/20/81. Statutory Authority: Chapter 70.38 RCW. 79-12-079 (Order 188), § 248-19-300, filed 11/30/79.]

WAC 246-310-120 Concurrent review process. (1) Projects for which the department may establish concurrent review schedules are identified in RCW 70.38.115(7). An annual concurrent review has been scheduled for competing projects proposing:

(a) New nursing homes, not using bed allocations banked under the provisions of RCW 70.38.115(13);

(b) Nursing home bed additions, not using bed allocations banked under the provisions of RCW 70.38.115(13);

(c) The redistribution of beds from the following facility and service categories to nursing home beds:

(i) Acute care,

(ii) Boarding home, or

(iii) Intermediate care for the mentally retarded.

(2) Procedures for the concurrent review process shall be as follows:

(a) Submittal of initial applications.

(i) Each applicant shall submit one original and one copy of the application to the department.

(ii) Each applicant if requested in writing shall provide a copy of his or her application to the applicant of each other competing application.

(b) Screening of the initial applications.

(i) The department shall screen each initial application during the screening period of the applicable concurrent review cycle schedule.

(ii) The screening period shall begin on the first working day following the last day of the initial application submittal period for the applicable concurrent review cycle schedule.

(iii) The department by, the end of the screening period of the applicable concurrent review cycle schedule, shall send a written request for supplemental information to each applicant.

(iv) Each applicant, by the end of the final application submittal period, shall respond to the department's written request for supplemental information in one of the following ways:

(A) Submitting the requested written supplemental information, or

(B) Submitting a written request that the incomplete application be reviewed without supplemental information.

(c) Reviewing of final applications.

(i) The department shall commence the review of competing applications on the date prescribed for the applicable concurrent review cycle schedule.

(ii) The total number of days in the public comment and final review periods shall not exceed one hundred and thirty-five, unless extended in accordance with subsection (2)(d) of this section.

(iii) The public comment period shall be a maximum of ninety days from the beginning of the review period, unless the public comment period is extended in accordance with subsection (2)(d) of this section. The first sixty days of the public comment period is reserved for receiving public comment and conducting a public hearing, if requested. The remaining thirty days shall be reserved for the applicant or applicants to provide rebuttal statements to written or oral statements submitted during the first sixty-day period. Any affected person shall also be provided the opportunity to provide rebuttal statements to written or oral statements submitted during the first sixty-day period.

(iv) The department shall conclude its final review and the secretary's designee shall take action on a certificate of need application within forty-five days after the end of the public comment period, unless extended in accordance with subsection (2)(d) of this section.

(d) Extending review of final applications.

(i) The public comment period shall be extended in accordance with the provisions of WAC 246-310-100.

(ii) The final review period may be extended by the department under the following provisions:

(A) The department informs each applicant of the competing applications of the existence of an unresolved pivotal issue.

(B) The department may make a written request for additional information from one or more of the applicants of the competing applications.

(C) The department shall specify in the written request a deadline for receipt of written responses.

(D) Each applicant receiving such written request may provide a written response within the specified deadline.

(E) The department may extend the final review period for all competing applications up to thirty days after the receipt of the last response to the department's request for additional information or after the specified deadline, whichever occurs first.

[Statutory Authority: Chapter 70.38 RCW. 98-10-053, § 246-310-120, filed 4/29/98, effective 5/30/98; 96-24-052, § 246-310-120, filed 11/27/96, effective 12/28/96. Statutory Authority: RCW 70.38.135 and 70.38.919. 92-02-018 (Order 224), § 246-310-120, filed 12/23/91, effective 1/23/92. Statutory Authority: RCW 43.70.040. 91-02-049 (Order 121), recodified as § 246-310-120, filed 12/27/90, effective 1/31/91. Statutory Authority: RCW 70.38.115. 87-10-023 (Order 2487), § 248-19-327, filed 5/1/87. Statutory Authority: RCW 70.38.135. 86-06-030 (Order 2344), § 248-19-327, filed 2/28/86.]

WAC 246-310-130 Nursing home concurrent review cycles. (1) The department shall review concurrently during review cycles established under subsection (5) of this section the following:

(a) New nursing homes beds not using bed allocations banked under the provisions of RCW 70.38.115(13);

(b) Redistribution of beds from the following facility or service categories to skilled nursing care beds:

(i) Acute care,

(ii) Boarding home care.

(2) Undertakings by continuing care retirement communities (CCRCs), as defined in this section which do not propose or are not operating within a transition period as defined in this section during development, and which meet the following conditions, shall be reviewed under the regular review process per WAC 246-310-160:

(a) The number of nursing home beds requested in a single undertaking shall not exceed sixty; and

(b) After project completion, the number of nursing home beds, including those with which the CCRC contracts, shall not exceed one bed for each four independent living units within the CCRC. In computing this ratio, only independent living units of the CCRC already existing, and/or scheduled for completion at the same time as the proposed nursing home beds under the same financial feasibility plan, shall be counted.

(3) The annual nursing home concurrent review consists of the following cycles:

(a) One of the annual cycles is reserved for the review of competing applications submitted by or on behalf of:

(i) CCRCs applying for nursing home beds available from the statewide CCRC allotment as described in WAC 246-310-380(5); and

(ii) CCRCs which propose or are operating within a transition period during development and are not applying for nursing home beds available from any nursing home planning area.

(b) Two other cycles are established for review of competing applications for nursing home beds needed. The nurs-

ing home planning areas are divided into two separate groups.

(4) The department shall use the following nursing home concurrent review application filing procedures:

(a) Each applicant shall:

(i) File the required number of copies of each application as specified in the application information requirements, and

(ii) Mail or deliver the application so that the department receives it no later than the last day for initial application receipt as prescribed in the schedule for that concurrent review cycle.

(b) The department shall:

(i) Only review applications for which a letter of intent, as described in WAC 246-310-080, was mailed or delivered to the department before the last day for receipt of letters of intent as indicated below;

(ii) Begin screening all applications received during the initial application period on the first working day following the close of that period; and

(iii) Return to the applicant any application received after the last day of the initial application receipt period.

(5) The schedules for the annual nursing home bed concurrent review cycles shall be as follows:

(a) For those applications described in subsection (3)(a) of this section, the concurrent review cycle schedule shall be as follows:

(i) Period for receipt of letters of intent shall begin on the first working day of June and end on the first working day of July,

(ii) Period for receipt of initial applications shall begin on the first working day of July and end on the first working day of August,

(iii) End of initial application completeness screening period is the first working day of September,

(iv) End of final application receipt period is the first working day of October, and

(v) Beginning of concurrent review period is October 16 or first working day after that date.

(b) For competing applications submitted for nursing home beds available for the Chelan/Douglas, Clallam, Clark/Skamania, Cowlitz, Grant, Grays Harbor, Island, Jefferson, King, Kittitas, Klickitat, Okanogan, Pacific, San Juan, Skagit, Spokane, and Yakima nursing home planning areas, the concurrent review cycle schedule shall be as follows:

(i) Period for receipt of letters of intent shall begin on the first working day of July and end on the first working day of August,

(ii) Period for receipt of initial applications shall begin on the first working day of August and end on the first working day of September,

(iii) End of initial application completeness screening period is the first working day of October,

(iv) End of final application receipt period is the first working day of November, and

(v) Beginning of concurrent review period is November 16 or first working day after that date.

(c) For competing applications submitted for nursing home beds available for the Adams, Asotin, Benton, Columbia, Ferry, Franklin, Garfield, Kitsap, Lewis, Lincoln, Mason, Pend Oreille, Pierce, Snohomish, Stevens, Thurston, Wahkiakum, Walla Walla, Whatcom, and Whitman nursing home planning areas, the concurrent review cycle schedule shall be as follows:

(i) Period for receipt of letters of intent shall begin on the first working day of August and end on the first working day of September,

(ii) Period for receipt of initial applications shall begin on the first working day of September and end on the first working day of October,

(iii) End of initial application completeness screening period is the first working day of November,

(iv) End of final application receipt period is the first working day of December, and

(v) Beginning of concurrent review period is December 16 or first working day after that date.

[Statutory Authority: Chapter 70.38 RCW. 96-24-052, § 246-310-130, filed 11/27/96, effective 12/28/96. Statutory Authority: RCW 70.38.135 and 70.38.919. 92-02-018 (Order 224), § 246-310-130, filed 12/23/91, effective 1/23/92. Statutory Authority: RCW 43.70.040. 91-02-049 (Order 121), recodified as § 246-310-130, filed 12/27/90, effective 1/31/91. Statutory Authority: RCW 70.38.115. 88-24-026 (Order 2736), § 248-19-328, filed 12/2/88. Statutory Authority: RCW 70.38.115 and 70.38.135. 88-04-047 (Order 2591), § 248-19-328, filed 1/29/88. Statutory Authority: RCW 70.38.115. 87-10-023 (Order 2487), § 248-19-328, filed 5/1/87.]

WAC 246-310-132 Open heart surgery concurrent review cycle. (1) The department shall review new open heart surgery services using the concurrent review cycle in this section.

(2) Certificate of need applications shall be submitted and reviewed according to the following schedule and procedures.

(a) Letters of intent shall be submitted between the first working day and last working day of July of each year.

(b) Initial applications shall be submitted between the first working day and last working day of August of each year.

(c) The department shall screen initial applications for completeness by the last working day of September of each year.

(d) Responses to screening questions shall be submitted by the last working day of October of each year.

(e) The public review and comment period for applications shall begin on November 16 of each year. In the event that November 16 is not a working day in any year, then the public review and comment period shall begin on the first working day after November 16.

(f) The public comment period shall be limited to ninety days, unless extended according to the provisions of WAC 246-310-120 (2)(d). The first sixty days of the public comment period shall be reserved for receiving public comments and conducting a public hearing, if requested. The remaining thirty days shall be for the applicant or applicants to provide rebuttal statements to written or oral statements submitted during the first sixty-day period. Any affected person shall also be provided the opportunity to provide rebuttal statements to written or oral statements submitted during the first sixty-day period.

(g) The final review period shall be limited to sixty days, unless extended according to the provisions of WAC 246-310-120 (2)(d).

(3) Any letter of intent or certificate of need application submitted for review in advance of this schedule, or certifi-

cate of need application under review as of the effective date of this section, shall be held by the department for review according to the schedule in this section.

[Statutory Authority: Chapter 70.38 RCW. 98-10-053, § 246-310-132, filed 4/29/98, effective 5/30/98; 96-24-052, § 246-310-132, filed 11/27/96, effective 12/28/96. Statutory Authority: RCW 70.38.135. 92-16-081 (Order 293) § 246-310-132, filed 8/4/92 effective 9/4/92; 91-17-011 (Order 188), § 246-310-132, filed 8/12/91, effective 8/28/91.]

WAC 246-310-136 Ethnic minority nursing home bed pool—Considerations for review of applications. (1) The department shall consider the following factors in the course of reviewing and making decisions on applications for construction or establishment of nursing home beds for ethnic minorities.

(a) Conformance with applicable review criteria in WAC 246-310-210, 246-310-220, 246-310-230, and 246-310-240;

(b) Which competing applications best meet identified needs, consistent with the purpose of concurrent review as stated in RCW 70.38.115(7).

(c) The relative degree to which the long-term care needs of an ethnic minority among Washington residents are not otherwise being met. This includes consideration of the legislature's finding that certain ethnic minorities have special cultural, language, dietary, and other needs not generally met by existing nursing homes which are intended to serve the general population;

(d) The percentage of low-income persons who would be served by the proposed project; and

(e) The impact of the proposal on the area's total need for nursing home beds.

(2) To be eligible to apply for and receive an award of beds from the ethnic nursing home bed pool, an application must be to construct, develop, or establish a new nursing home or add beds to an existing nursing home that:

(a) Shall be owned and operated by a nonprofit corporation. At least fifty percent of the board of directors of the corporation are members of the ethnic minority the nursing home is intended to serve;

(b) Shall be designed, managed, and administered to serve the special cultural, language, dietary, and other needs of the ethnic minority; and

(c) Shall not discriminate in admissions against persons who are not members of the ethnic minority whose special needs the nursing home is designed to serve.

(3) An applicant not awarded beds in a concurrent review shall not be given preference over other applicants in any subsequent concurrent review on the basis of the prior review and decision when that applicant submits a new application for another review.

[Statutory Authority: Chapter 70.38 RCW. 96-24-052, § 246-310-136, filed 11/27/96, effective 12/28/96. Statutory Authority: RCW 70.38.135 (3)(c). 92-05-057 (Order 244), § 246-310-136, filed 2/14/92, effective 3/16/92.]

WAC 246-310-140 Emergency review process. (1) The emergency review process shall not exceed fifteen working days from the beginning of the review period.

(2) The department shall complete its final review and the secretary's designee shall make his or her decision on an emergency certificate of need application within fifteen working days after the beginning of the review period unless the department extends its final review period in accordance with the provisions of subsection (3) of this section.

(3) If an issue, which is pivotal to the decision of the secretary's designee remains unresolved, the department may make one request for additional information from the person submitting the application. The department may extend its final emergency review period up to but not exceeding ten days after receipt of the applicant's written response to the department's request for information.

[Statutory Authority: Chapter 70.38 RCW. 96-24-052, § 246-310-140, filed 11/27/96, effective 12/28/96. Statutory Authority: RCW 43.70.040. 91-02-049 (Order 121), recodified as § 246-310-140, filed 12/27/90, effective 1/31/91. Statutory Authority: RCW 70.38.135. 86-06-030 (Order 2344), § 248-19-350, filed 2/28/86; 82-19-055 (Order 244), § 248-19-350, filed 9/15/82; 81-09-012 (Order 210), § 248-19-350, filed 4/9/81, effective 5/20/81. Statutory Authority: Chapter 70.38 RCW. 79-12-079 (Order 188), § 248-19-350, filed 11/30/79.]

WAC 246-310-150 Expedited review process. (1) The expedited review process shall not exceed fifty days from the beginning of the review period unless extended in accordance with the provisions of subsection (2) of this section.

(a) The public comment period shall be limited to thirty days. The first twenty days of the public comment period shall be reserved for receiving public comments. The remaining ten days shall be for the applicant or applicants to provide rebuttal statements to written or oral statements submitted during the first twenty-day period. Any affected person shall also be provided the opportunity to provide rebuttal statements to written or oral statements submitted during the first twenty-day period.

(b) The department shall complete its final review and the secretary's designee shall make his or her decision on a certificate of need application under an expedited review within twenty days of the end of the public comment period.

(2) The review period for an expedited review may be extended according to the following provisions:

(a) The review period may be extended an additional forty-five days in accordance with WAC 246-310-100. The department may grant further extensions to this review period: Provided, The person submitting the certificate of need application gives written consent to further extension.

(b) If an issue, which is pivotal to the decision of the secretary's designee remains unresolved, the department may make one request for additional information from the person submitting the application. The department may extend its final expedited review period up to but not exceeding thirty days after receipt of the applicant's written response to the department's request for information.

(c) The department may extend its final review period upon receipt of a written request of the person submitting the application: Provided however, That such an extension shall not exceed sixty days.

[Statutory Authority: Chapter 70.38 RCW. 98-10-053, § 246-310-150, filed 4/29/98, effective 5/30/98; 96-24-052, § 246-310-150, filed 11/27/96, effective 12/28/96. Statutory Authority: RCW 70.38.135 and 70.38.919. 92-02-018 (Order 224), § 246-310-150, filed 12/23/91, effective 1/23/92. Statutory Authority: RCW 43.70.040. 91-02-049 (Order 121), recodified as § 246-310-150, filed 12/27/90, effective 1/31/91. Statutory Authority: RCW 70.38.135. 86-06-030 (Order 2344), § 248-19-340, filed 2/28/86; 82-19-055 (Order 244), § 248-19-340, filed 9/15/82; 81-09-012 (Order 210), § 248-19-340, filed 4/9/81, effective 5/20/81. Statutory Authority: Chapter 70.38 RCW. 79-12-079 (Order 188), § 248-19-340, filed 11/30/79.]

WAC 246-310-160 Regular review process. (1) The regular review process shall not exceed ninety days from the beginning of the review period and shall be conducted in accordance with this section unless the review period is extended in accordance with the provisions of subsection (2) of this section.

(a) The public comment period shall be limited to forty-five days. The first thirty-five days of the public comment period shall be reserved for receiving public comments and conducting a public hearing, if requested. The remaining ten days shall be reserved for the applicant to provide rebuttal statements to written or oral statements submitted during the first thirty-five day period. Any affected person shall also be provided the opportunity to provide rebuttal statements to written or oral statements submitted during the first thirty-five day period.

(b) The department shall complete its final review and the secretary's designee shall make a decision on a certificate of need application within forty-five days of the end of the public comment period.

(2) The review period for a regular review may be extended according to the following provisions:

(a) The public comment period may be extended for up to an additional forty-five days in accordance with WAC 246-310-100. The department may grant further extensions to this review period: Provided, The person submitting the certificate of need application gives written consent to such further extensions.

(b) If an issue, which is pivotal to the decision of the secretary's designee remains unresolved, the department may make one request for additional information from the person submitting the application. The department may extend its final review period up to but not exceeding thirty days after receipt of the applicant's written response to the department's request for information.

(c) The department may extend either the public comment period or the department's final review period upon receipt of a written request of the person submitting the application: Provided however, That such an extension shall not exceed ninety days.

[Statutory Authority: Chapter 70.38 RCW. 98-10-053, § 246-310-160, filed 4/29/98, effective 5/30/98; 96-24-052, § 246-310-160, filed 11/27/96, effective 12/28/96. Statutory Authority: RCW 70.38.135 and 70.38.919. 92-02-018 (Order 224), § 246-310-160, filed 12/23/91, effective 1/23/92. Statutory Authority: RCW 43.70.040. 91-02-049 (Order 121), recodified as § 246-310-160, filed 12/27/90, effective 1/31/91. Statutory Authority: RCW 70.38.135. 86-06-030 (Order 2344), § 248-19-330, filed 2/28/86; 82-19-055 (Order 244), § 248-19-330, filed 9/15/82; 81-09-012 (Order 210), § 248-19-330, filed 4/9/81, effective 5/20/81. Statutory Authority: Chapter 70.38 RCW. 79-12-079 (Order 188), § 248-19-330, filed 11/30/79.]

WAC 246-310-170 Notification of beginning of review. (1) Notice required.

The department shall provide written notification of the beginning of the review of a certificate of need application and notification of the beginning of the review of a proposed withdrawal of a certificate of need to interested persons and any other person submitting a written request that the person's name be on the mailing list for such notice. Notification of the beginning of the review of a certificate of need application shall be provided through a newspaper of general circulation in the health service area of the project.

(2) Specific notice requirements.

(a) The department shall give "notification of the beginning of review" of an application after the department has received an application or the applicant's request, submitted in accordance with WAC 246-310-090 (2)(c), that review of the application begin. Such notice shall be given according to the following requirements:

(i) Emergency review.

When an application is being reviewed under the emergency review process, required notices shall be given within five working days following the receipt of a complete application or the applicant's written request that review of the application begin.

(ii) Expedited and regular review.

When an application is being reviewed under the expedited or regular review process, required notices shall be given within five working days of a declaration that the application is complete or the applicant's request that review of the application begin.

(b) The department shall give notification of the beginning of the review of a proposed withdrawal of a certificate of need when the department determines there may be good cause to withdraw a certificate of need.

(c) The notices shall include:

(i) The procedures for receiving copies of applications, supplemental information and department decisions;

(ii) A general description of the project;

(iii) In the case of a proposed withdrawal of a certificate of need, the reasons for the proposed withdrawal;

(iv) The proposed review schedule;

(v) The period within which one or more interested persons may request a public hearing;

(vi) The name and address of the agency to which a request for a public hearing should be sent;

(vii) The manner in which notification will be provided of the time and place of any hearing so requested;

(viii) Notice that any interested person wishing to receive notification of a meeting on the application called by the department after the end of the public comment period shall submit a written request to the department to receive notification of such meetings; and

(ix) The period within which any interested person may request notification of the meetings referenced in subsection (2)(c)(viii) of this section.

(d) The notices to other interested persons shall be mailed on the same date the notice to the public is mailed to the newspaper for publication.

(3) Beginning of review.

(a) Review of a certificate of need application under the expedited or regular review process shall begin on the day the department sends notification of the beginning of review to the general public and other interested persons unless the department has received a written request from the applicant pursuant to WAC 246-310-090 (2)(c)(iii), in which case review shall begin upon receipt of such request.

(b) Review of certificate of need applications under the concurrent review process shall begin fifteen days after the conclusion of the published time period for the submission of final applications subject to concurrent review.

(c) Review of a certificate of need application under emergency review shall begin on the first day after the date

on which the department has determined the application is complete, or has received a written request to begin review submitted by the applicant in accordance with WAC 246-310-090 (2)(c).

(d) Review of a proposed withdrawal of a certificate of need shall begin on the day the department sends notification of the beginning of review to the general public and to other interested persons.

[Statutory Authority: Chapter 70.38 RCW. 98-10-053, § 246-310-170, filed 4/29/98, effective 5/30/98; 96-24-052, § 246-310-170, filed 11/27/96, effective 12/28/96. Statutory Authority: RCW 70.38.135 and 70.38.919. 92-02-018 (Order 224), § 246-310-170, filed 12/23/91, effective 1/23/92. Statutory Authority: RCW 43.70.040. 91-02-049 (Order 121), recodified as § 246-310-170, filed 12/27/90, effective 1/31/91. Statutory Authority: RCW 70.38.135. 86-06-030 (Order 2344), § 248-19-310, filed 2/28/86; 81-09-012 (Order 210), § 248-19-310, filed 4/9/81, effective 5/20/81. Statutory Authority: Chapter 70.38 RCW. 79-12-079 (Order 188), § 248-19-310, filed 11/30/79.]

WAC 246-310-180 Public hearings. (1) "Opportunity for a public hearing," as used in this section, shall mean a public hearing will be conducted if a valid request for such a hearing has been submitted by one or more interested persons.

(2) The department shall provide opportunity to interested persons for a public hearing on:

(a) A certificate of need application under review, unless the application is being reviewed according to the emergency or expedited review processes; and

(b) The proposed withdrawal of a certificate of need.

(3) To be valid, a request for a public hearing on a certificate of need application or on the proposed withdrawal of a certificate of need shall:

(a) Be submitted in writing;

(b) Be received by the department within fifteen days after the date on which the department's "notification of beginning of review" for the particular certificate of need application or proposed withdrawal of a certificate of need was published in a newspaper of general circulation; and

(c) Include identification of the particular certificate of need application or proposed certificate of need withdrawal for which the public hearing is requested and the full name, complete address, and signature of the person making the request.

(4) The department shall give written notice of a public hearing conducted pursuant to this section.

(a) Written notice shall be given to interested persons and the public at least fifteen days prior to the beginning of the public hearing.

(b) The notices shall include: Identification of the certificate of need application or certificate of need on which the public hearing is to be conducted and the date, time, and location of the public hearing.

(c) Notice to the general public to be served by the proposed project to which the certificate of need application or certificate of need pertains shall be through a newspaper of general circulation in the health service area of the proposed project. The notices to other interested persons shall be mailed on the same date the notice to the public is mailed to the newspaper for publication.

(5) In a public hearing on a certificate of need application or on a proposed withdrawal of a certificate of need, any person shall have the right to be represented by counsel and to present oral or written arguments and evidence relevant to the subject matter of the hearing. Any person affected by the matter may conduct reasonable questioning of persons who make relevant factual allegations.

(6) The department shall maintain a verbatim record of a public hearing and shall not impose fees for the hearing.

(7) The department shall not be required to conduct a public hearing on a certificate of need application being reviewed according to the emergency or expedited review procedures.

(8) The department may conduct a public hearing in the absence of a request as identified in subsection (3) of this section, if the department determines it is in the best interest of the public.

[Statutory Authority: Chapter 70.38 RCW. 98-10-053, § 246-310-180, filed 4/29/98, effective 5/30/98; 96-24-052, § 246-310-180, filed 11/27/96, effective 12/28/96. Statutory Authority: RCW 70.38.135 and 70.38.919. 92-02-018 (Order 224), § 246-310-180, filed 12/23/91, effective 1/23/92. Statutory Authority: RCW 43.70.040. 91-02-049 (Order 121), recodified as § 246-310-180, filed 12/27/90, effective 1/31/91. Statutory Authority: RCW 70.38.135. 86-06-030 (Order 2344), § 248-19-320, filed 2/28/86; 81-09-012 (Order 210), § 248-19-320, filed 4/9/81, effective 5/20/81. Statutory Authority: Chapter 70.38 RCW. 79-12-079 (Order 188), § 248-19-320, filed 11/30/79.]

WAC 246-310-190 Ex parte contacts. (1) There shall be no ex parte contacts as defined in WAC 246-310-010 after whichever of the following occurs last:

(a) The conclusion of a public hearing held in accordance with WAC 246-310-180, or

(b) The end of the public comment period.

(2) Any of the following communications shall not be considered ex parte contacts:

(a) A communication regarding the procedure or process of the review.

(b) A communication made in a meeting open to the public requested by the department and reasonable notice of the meeting has been given to the applicant, all applicants in a concurrent review, and all persons having previously requested in writing to be notified of all such meetings or written requests for information concerning a specific application for certificate of need or a specific proposed withdrawal of a certificate of need.

(c) A written request for information made by the department and provided to all persons specified in subsection (2)(b) of this section.

(d) A response to a request made by the department in a meeting held in accordance with subsection (2)(b) of this section or in response to subsection (2)(c) of this section, and submitted to the department and to all persons specified in subsection (2)(b) of this section.

[Statutory Authority: Chapter 70.38 RCW. 96-24-052, § 246-310-190, filed 11/27/96, effective 12/28/96. Statutory Authority: RCW 70.38.135 and 70.38.919. 92-02-018 (Order 224), § 246-310-190, filed 12/23/91, effective 1/23/92. Statutory Authority: RCW 43.70.040. 91-02-049 (Order 121), recodified as § 246-310-190, filed 12/27/90, effective 1/31/91. Statutory Authority: RCW 70.38.135. 86-06-030 (Order 2344), § 248-19-326, filed 2/28/86.]

WAC 246-310-200 Bases for findings and action on applications. (1) The findings of the department's review of certificate of need applications and the action of the secre-

tary's designee on such applications shall, with the exceptions provided for in WAC 246-310-470 and 246-310-480 be based on determinations as to:

(a) Whether the proposed project is needed;

(b) Whether the proposed project will foster containment of the costs of health care;

(c) Whether the proposed project is financially feasible; and

(d) Whether the proposed project will meet the criteria for structure and process of care identified in WAC 246-310-230.

(2) Criteria contained in this section and in WAC 246-310-210, 246-310-220, 246-310-230, and 246-310-240 shall be used by the department in making the required determinations.

(a) In the use of criteria for making the required determinations, the department shall consider:

(i) The consistency of the proposed project with service or facility standards contained in this chapter;

(ii) In the event the standards contained in this chapter do not address in sufficient detail for a required determination the services or facilities for health services proposed, the department may consider standards not in conflict with those standards in accordance with subsection (2)(b) of this section; and

(iii) The relationship of the proposed project to the long-range plan (if any) of the person proposing the project.

(b) The department may consider any of the following in its use of criteria for making the required determinations:

(i) Nationally recognized standards from professional organizations;

(ii) Standards developed by professional organizations in Washington state;

(iii) Federal medicare and medicaid certification requirements;

(iv) State licensing requirements;

(v) Applicable standards developed by other individuals, groups, or organizations with recognized expertise related to a proposed undertaking; and

(vi) The written findings and recommendations of individuals, groups, or organizations with recognized expertise related to a proposed undertaking, with whom the department consults during the review of an application.

(c) At the request of an applicant, the department shall identify the criteria and standards it will use prior to the submission and screening of a certificate of need application: Provided however, That when a person requests identification of criteria and standards prior to the submission of an application, the person shall submit such descriptive information on a project as is determined by the department to be reasonably necessary in order to identify the applicable criteria and standards. The department shall respond to such request within fifteen working days of its receipt. In the absence of an applicant's request under this subsection, the department shall identify the criteria and standards it will use during the screening of a certificate of need application. The department shall inform the applicant about any consultation services it will use in the review of a certificate of need application prior to the use of such consultation services.

(d) Representatives of the department or consultants whose services are engaged by the department may make an on-site visit to a health care facility, or other place for which a certificate of need application is under review, or for which a proposal to withdraw a certificate of need is under review when the department deems such an on-site visit is necessary and appropriate to the department's review of a proposed project.

[Statutory Authority: Chapter 70.38 RCW. 96-24-052, § 246-310-200, filed 11/27/96, effective 12/28/96. Statutory Authority: RCW 70.38.135 and 70.38.919. 92-02-018 (Order 224), § 246-310-200, filed 12/23/91, effective 1/23/92. Statutory Authority: RCW 43.70.040. 91-02-049 (Order 121), recodified as § 246-310-200, filed 12/27/90, effective 1/31/91. Statutory Authority: RCW 70.38.135. 85-05-032 (Order 2208), § 248-19-360, filed 2/15/85; 81-09-012 (Order 210), § 248-19-360, filed 4/9/81, effective 5/20/81. Statutory Authority: Chapter 70.38 RCW. 79-12-079 (Order 188), § 248-19-360, filed 11/30/79.]

WAC 246-310-210 Determination of need. The determination of need for any project shall be based on the following criteria, except these criteria will not justify exceeding the limitation on increases of nursing home beds provided in WAC 246-310-810.

(1) The population served or to be served has need for the project and other services and facilities of the type proposed are not or will not be sufficiently available or accessible to meet that need. The assessment of the conformance of a project with this criterion shall include, but need not be limited to, consideration of the following:

(a) In the case of a reduction, relocation, or elimination of a service, the need the population presently served has for the service, the extent to which the need will be met adequately by the proposed relocation or by alternative arrangements, and the effect of the reduction, elimination, or relocation of the service on the ability of low-income persons, racial and ethnic minorities, women, handicapped persons, and other underserved groups and the elderly to obtain needed health care;

(b) In the case of health services or facilities proposed to be provided, the efficiency and appropriateness of the use of existing services and facilities similar to those proposed;

(c) In the case of an application by an osteopathic or allopathic facility the need for and the availability in the community of services and facilities for osteopathic and allopathic physicians and their patients, and the impact on existing and proposed institutional training programs for doctors of osteopathy and medicine at the student, internship, and residency training levels; and

(d) In the case of a project not involving health services, the contribution of the project toward overall management and support of such services.

(2) All residents of the service area, including low-income persons, racial and ethnic minorities, women, handicapped persons, and other underserved groups and the elderly are likely to have adequate access to the proposed health service or services. The assessment of the conformance of a project with this criterion shall include, but not be limited to, consideration as to whether the proposed services makes a contribution toward meeting the health-related needs of members of medically underserved groups which have traditionally experienced difficulties in obtaining equal access to health services, particularly those needs identified in the applicable regional health plan, annual implementation plan,

and state health plan as deserving of priority. Such consideration shall include an assessment of the following:

(a) The extent to which medically underserved populations currently use the applicant's services in comparison to the percentage of the population in the applicant's service area which is medically underserved, and the extent to which medically underserved populations are expected to use the proposed services if approved;

(b) The past performance of the applicant in meeting obligations, if any, under any applicable federal regulations requiring provision of uncompensated care, community service, or access by minorities and handicapped persons to programs receiving federal financial assistance (including the existence of any unresolved civil rights access complaints against the applicant);

(c) The extent to which medicare, medicaid, and medically indigent patients are served by the applicant; and

(d) The extent to which the applicant offers a range of means by which a person will have access to its services (e.g., outpatient services, admission by house staff, admission by personal physician).

(3) The applicant has substantiated any of the following special needs and circumstances the proposed project is to serve.

(a) The special needs and circumstances of entities such as medical and other health professions schools, multidisciplinary clinics and specialty centers providing a substantial portion of their services or resources, or both, to individuals not residing in the health service areas in which the entities are located or in adjacent health service areas.

(b) The special needs and circumstances of biomedical and behavioral research projects designed to meet a national need and for which local conditions offer special advantages.

(c) The special needs and circumstances of osteopathic hospitals and nonallopathic services.

(4) The project will not have an adverse effect on health professional schools and training programs. The assessment of the conformance of a project with this criterion shall include consideration of:

(a) The effect of the means proposed for the delivery of health services on the clinical needs of health professional training programs in the area in which the services are to be provided; and

(b) If proposed health services are to be available in a limited number of facilities, the extent to which the health professions schools serving the area will have access to the services for training purposes.

(5) The project is needed to meet the special needs and circumstances of enrolled members or reasonably anticipated new members of a health maintenance organization or proposed health maintenance organization and the services proposed are not available from nonhealth maintenance organization providers or other health maintenance organizations in a reasonable and cost-effective manner consistent with the basic method of operation of the health maintenance organization or proposed health maintenance organization. In assessing the availability of health services from these providers, the department shall consider only whether the services from these providers:

(a) Would be available under a contract of at least five years' duration;

(b) Would be available and conveniently accessible through physicians and other health professionals associated with the health maintenance organization or proposed health maintenance organization (for example - whether physicians associated with the health maintenance organization have or will have full staff privileges at a nonhealth maintenance organization hospital);

(c) Would cost no more than if the services were provided by the health maintenance organization or proposed health maintenance organization; and

(d) Would be available in a manner administratively feasible to the health maintenance organization or proposed health maintenance organization.

(6) For nursing home projects including distinct part long-term care units located in a hospital and licensed under chapter 70.41 RCW, the following criterion shall apply in addition to those found in WAC 246-310-380.

(a) In the case of an application for new nursing home beds, the department shall find no need if the state is at or above the statewide estimated bed need, except as referenced in WAC 246-310-380(5). However, the department may put under review and subsequently approve or deny applications that propose to redistribute nursing home beds to a planning area under the established ratio. The department may also consider applications that propose to add beds in planning areas under the established ratio using beds banked and for which the need for the beds is not deemed met, under the provisions of RCW 70.38.115(13). For the above projects, the need for such projects, shall, in part, be determined using individual planning area estimated bed need numbers.

(b) If the state is below the statewide estimated bed need or for those projects referenced above, the department shall determine the need for nursing home beds, including distinct part long-term care units located in a hospital licensed under chapter 70.41 RCW, based on:

(i) The availability of other nursing home beds in the planning area to be served; and

(ii) The availability of other services in the planning area to be served. Other services to be considered include, but are not limited to: Assisted living (as defined in chapter 74.39A RCW); boarding home (as defined in chapter 18.20 RCW); enhanced adult residential care (as defined in chapter 74.39A RCW); adult residential care (as defined in chapter 74.39A RCW); adult family homes (as defined in chapter 70.128 RCW); hospice, home health and home care (as defined in chapter 70.127 RCW); personal care services (as defined in chapter 74.09 RCW); and home and community services provided under the community options program entry system waiver (as referenced in chapter 74.39A RCW). The availability of other services shall be based on data which demonstrates that the other services are capable of adequately meeting the needs of the population proposed to be served by the applicant. The following variables should be evaluated in this analysis when available:

(A) The current capacity of nursing homes and other long-term care services;

(B) The occupancy rates of nursing homes and other long-term care services over the previous two-year period;

(C) Proposed residential care projects scheduled to be completed within the same period of time indicated on the nursing home certificate of need application; and

(D) The ability of the other long-term care services to serve all people regardless of payor source.

[Statutory Authority: Chapter 70.38 RCW. 96-24-052, § 246-310-210, filed 11/27/96, effective 12/28/96. Statutory Authority: RCW 70.38.135 and 70.38.919. 92-02-018 (Order 224), § 246-310-210, filed 12/23/91, effective 1/23/92. Statutory Authority: RCW 43.70.040. 91-02-049 (Order 121), recodified as § 246-310-210, filed 12/27/90, effective 1/31/91. Statutory Authority: RCW 70.38.135. 85-05-032 (Order 2208), § 248-19-370, filed 2/15/85; 81-09-012 (Order 210), § 248-19-370, filed 4/9/81, effective 5/20/81. Statutory Authority: Chapter 70.38 RCW. 79-12-079 (Order 188), § 248-19-370, filed 11/30/79.]

WAC 246-310-220 Determination of financial feasibility. The determination of financial feasibility of a project shall be based on the following criteria.

(1) The immediate and long-range capital and operating costs of the project can be met.

(2) The costs of the project, including any construction costs, will probably not result in an unreasonable impact on the costs and charges for health services.

(3) The project can be appropriately financed.

[Statutory Authority: RCW 43.70.040. 91-02-049 (Order 121), recodified as § 246-310-220, filed 12/27/90, effective 1/31/91. Statutory Authority: Chapter 70.38 RCW. 79-12-079 (Order 188), § 248-19-380, filed 11/30/79.]

WAC 246-310-230 Criteria for structure and process of care. A determination that a project fosters an acceptable or improved quality of health care shall be based on the following criteria.

(1) A sufficient supply of qualified staff for the project, including both health personnel and management personnel, are available or can be recruited.

(2) The proposed service(s) will have an appropriate relationship, including organizational relationship, to ancillary and support services, and ancillary and support services will be sufficient to support any health services included in the proposed project.

(3) There is reasonable assurance that the project will be in conformance with applicable state licensing requirements and, if the applicant is or plans to be certified under the medicaid or medicare program, with the applicable conditions of participation related to those programs.

(4) The proposed project will promote continuity in the provision of health care, not result in an unwarranted fragmentation of services, and have an appropriate relationship to the service area's existing health care system.

(5) There is reasonable assurance that the services to be provided through the proposed project will be provided in a manner that ensures safe and adequate care to the public to be served and in accord with applicable federal and state laws, rules, and regulations. The assessment of the conformance of a project to this criterion shall include but not be limited to consideration as to whether:

(a) The applicant or licensee has no history, in this state or elsewhere, of a criminal conviction which is reasonably related to the applicant's competency to exercise responsibility for the ownership or operation of a health care facility, a denial or revocation of a license to operate a health care facility, a revocation of a license to practice a health profession, or a decertification as a provider of services in the medicare or medicaid program because of failure to comply with applicable federal conditions of participation; or

(b) If the applicant or licensee has such a history, whether the applicant has affirmatively established to the department's satisfaction by clear, cogent and convincing evidence that the applicant can and will operate the proposed project for which the certificate of need is sought in a manner that ensures safe and adequate care to the public to be served and conforms to applicable federal and state requirements.

[Statutory Authority: Chapter 70.38 RCW. 96-24-052, § 246-310-230, filed 11/27/96, effective 12/28/96. Statutory Authority: RCW 43.70.040. 91-02-049 (Order 121), recodified as § 246-310-230, filed 12/27/90, effective 1/31/91. Statutory Authority: RCW 70.38.135. 81-09-012 (Order 210), § 248-19-390, filed 4/9/81, effective 5/20/81. Statutory Authority: Chapter 70.38 RCW. 79-12-079 (Order 188), § 248-19-390, filed 11/30/79.]

WAC 246-310-240 Determination of cost containment. A determination that a proposed project will foster cost containment shall be based on the following criteria:

(1) Superior alternatives, in terms of cost, efficiency, or effectiveness, are not available or practicable.

(2) In the case of a project involving construction:

(a) The costs, scope, and methods of construction and energy conservation are reasonable; and

(b) The project will not have an unreasonable impact on the costs and charges to the public of providing health services by other persons.

(3) The project will involve appropriate improvements or innovations in the financing and delivery of health services which foster cost containment and which promote quality assurance and cost effectiveness.

[Statutory Authority: RCW 43.70.040. 91-02-049 (Order 121), recodified as § 246-310-240, filed 12/27/90, effective 1/31/91. Statutory Authority: RCW 70.38.135. 86-06-030 (Order 2344), § 248-19-400, filed 2/28/86; 81-09-012 (Order 210), § 248-19-400, filed 4/9/81, effective 5/20/81. Statutory Authority: Chapter 70.38 RCW. 79-12-079 (Order 188), § 248-19-400, filed 11/30/79.]

WAC 246-310-260 Kidney transplantation. (1) Kidney transplantation is a tertiary service as listed in WAC 246-310-020.

(2) To receive approval a kidney transplant center must meet the following standards in addition to applicable review criteria in WAC 246-310-210, 246-310-220, 246-310-230, and 246-310-240.

(a) A center shall perform at least fifteen transplants annually by the fourth year of operation.

(b) A center shall document that it will meet the requirements of membership to the United Network for Organ Sharing (UNOS) or its successor organization.

[Statutory Authority: RCW 70.38.135 and 70.38.919. 92-02-018 (Order 224), § 246-310-260, filed 12/23/91, effective 1/23/92. Statutory Authority: RCW 43.70.040. 91-02-049 (Order 121), recodified as § 246-310-260, filed 12/27/90, effective 1/31/91. Statutory Authority: RCW 70.38.919. 90-16-058 (Order 073), § 248-19-601, filed 7/27/90, effective 8/27/90.]

WAC 246-310-261 Open heart surgery standards and need forecasting method. (1) Open heart surgery means a specialized surgical procedure (excluding organ transplantation) which utilizes a heart-lung bypass machine and is intended to correct congenital and acquired cardiac and coronary artery disease.

(2) Open heart surgery is a tertiary service as listed in WAC 246-310-020. To be granted a certificate of need, an open heart surgery program shall meet the standards in this

section in addition to applicable review criteria in WAC 246-310-210, 246-310-220, 246-310-230, and 246-310-240.

(3) Standards.

(a) A minimum of two hundred fifty open heart surgery procedures per year shall be performed at institutions with an open heart surgery program.

(b) Hospitals applying for a certificate of need shall demonstrate that they can meet one hundred ten percent of the minimum volume standard. To do so, the applicant hospital must provide written documentation, which is verifiable, of open heart surgeries performed on patients referred by active medical staff of the hospital. The volume of surgeries counted must be appropriate for the proposed program (i.e., pediatric and recognized complicated cases would be excluded).

(c) No new program shall be established which will reduce an existing program below the minimum volume standard.

(d) Open heart surgery programs shall have at least two board certified cardiac surgeons, one of whom shall be available for emergency surgery twenty-four hours a day. The practice of these surgeons shall be concentrated in a single institution and arranged so that each surgeon performs a minimum of one hundred twenty-five open heart surgery procedures per year at that institution.

(e) Institutions with open heart surgery programs shall have plans for facilitating emergency access to open heart surgery services at all times for the population they serve. These plans should, at minimum, include arrangements for addressing peak volume periods (such as joint agreements with other programs, the capacity to temporarily increase staffing, etc.), and the maintenance of or affiliation with emergency transportation services (including contingency plans for poor weather and known traffic congestion problems).

(f) In the event two or more hospitals are competing to meet the same forecasted net need, the department shall consider the following factors when determining which proposal best meets forecasted need:

(i) The most appropriate improvement in geographic access;

(ii) The most cost efficient service;

(iii) Minimizing impact on existing programs;

(iv) Providing the greatest breadth and depth of cardiovascular and support services; and

(v) Facilitating emergency access to care.

(g) Hospitals granted a certificate of need have three years from the date the program is initiated to establish the program and meet these standards.

(h) These standards should be reevaluated in at least three years.

(4) Steps in the need forecasting method. The department will develop a forecast of need for open heart surgery every year using the following procedures.

(a) Step 1. Based upon the most recent three years volumes reported for the hospitals within each planning area, compute the planning area's current capacity and the percent of out-of-state use of the area's hospitals. In those planning areas where a new program is being established, the assumed volume of that institution will be the greater of either the minimum volume standard or the estimated volume described in the approved application and adjusted by the department in the course of review and approval.

(b) Step 2. Patient origin adjust the three years of open heart surgery data, and compute each planning area's age-specific use rates and market shares.

(c) Step 3. Multiply the planning area's age-specific use rates by the area's corresponding forecast year population. The sum of these figures equals the forecasted number of surgeries expected to be performed on the residents of each planning area.

(d) Step 4. Apportion the forecasted surgeries among the planning areas in accordance with each area's average market share for the last three years of the four planning areas. This figure equals the forecasted number of state residents' surgeries expected to occur within the hospitals in each planning area. In those areas where a newly approved program is being established, an adjustment will be made to reflect anticipated market share shifts consistent with the approved application.

(e) Step 5. Increase the number of surgeries expected to occur within the hospitals in each planning area in accordance with the percent of surgeries calculated as occurring in those hospitals on out-of-state residents, based on the average of the last three years. This figure equals the total forecasted number of surgeries expected to occur within the hospitals in each planning area.

(f) Step 6. Calculate the net need for additional open heart surgery services by subtracting the current capacity from the total forecasted surgeries.

(g) Step 7. If the net need is less than the minimum volume standard, no new programs shall be assumed to be needed in the planning area. However, hospitals may be granted certificate of need approval even if the forecasted need is less than the minimum volume standard, provided:

(i) The applying hospital can meet all the other certificate of need criteria for an open heart surgery program (including documented evidence of capability of achieving the minimum volume standard); and

(ii) There is documented evidence that at least eighty percent of the patients referred for open heart surgery by the medical staff of the applying hospital are referred to institutions more than seventy-five miles away.

(5) For the purposes of the forecasting method in this section, the following terms have the following specific meanings:

(a) Age-specific categories. The categories used in computing age-specific values will be fifteen to forty-four year olds, forty-five to sixty-four year olds, sixty-five to seventy-four year olds, and seventy-five and older.

(b) Current capacity. A planning area's current capacity for open heart surgeries equals the sum of the highest reported annual volume for each hospital within the planning area during the most recent available three years data.

(c) Forecast year. Open heart surgery service needs shall be based on forecasts for the fourth year after the certificate of need open heart surgery concurrent review process. The 1992 reviews will be based on forecasts for 1996.

(d) Market share. The market share of a planning area represents the percent of a planning area's total patient origin adjusted surgeries that were performed in hospitals located in that planning area. The most recent available three years data

will be used to compute the age-specific market shares for each planning area.

(e) Open heart surgeries. Open heart surgeries are defined as DRGs 104 through 108, inclusive. All pediatric surgeries (ages fourteen and under) are excluded.

(f) Out-of-state use of planning area hospitals. The percent of out-of-state use of hospitals within a planning area will equal the percent of total surgeries occurring within the planning area's hospitals that were performed on patients from out-of-state (or on patients whose reported zip codes are invalid). The most recent available three years data will be used to compute out-of-state use of planning area hospitals.

(g) Patient origin adjustment. A patient origin adjustment of open heart surgeries provides a count of surgeries performed on the residents of a planning area regardless of which planning area the surgeries were performed in. (Surgeries can be patient origin adjusted by using the patient's zip code reported in the CHARS data base.)

(h) Planning areas. Four regional health service areas will be used as planning areas for forecasting open heart surgery service needs.

(i) Health service area "one" includes the following counties: Clallam, Island, Jefferson, King, Kitsap, Pierce, San Juan, Snohomish, Skagit, and Whatcom.

(ii) Health service area "two" includes the following counties: Cowlitz, Clark, Grays Harbor, Klickitat, Lewis, Mason, Pacific, Skamania, Thurston, and Wahkiakum.

(iii) Health service area "three" includes the following counties: Benton, Chelan, Douglas, Franklin, Grant, Kittitas, Okanogan, and Yakima.

(iv) Health service area "four" includes Adams, Asotin, Columbia, Ferry, Garfield, Lincoln, Pend Oreille, Stevens, Spokane, Walla Walla, and Whitman.

(v) Use rate. The open heart surgery use rate equals the number of surgeries performed on the residents of a planning area divided by the population of that planning area. The most recent available three years data is used to compute an averaged annual age-specific use rate for the residents of each of the four planning areas.

(6) The data source for open heart surgeries is the comprehensive hospital abstract reporting system (CHARS), office of hospital and patient data, department of health.

(7) The data source for population estimates and forecasts is the office of financial management population trends reports.

[Statutory Authority: RCW 70.38.135(3). 92-12-015 (Order 274), § 246-310-261, filed 5/26/92, effective 6/26/92.]

WAC 246-310-263 Pediatric cardiac surgery and interventional treatment center standards and need forecasting method. (1) A pediatric cardiac surgery and interventional treatment center is a hospital providing comprehensive pediatric cardiology care, including medical and surgical diagnosis and treatment.

(2) Pediatric cardiac surgery and interventions includes, but is not limited to: All pediatric surgery of the heart (excluding organ transplantation) and the great vessels in the chest; all pediatric catheter-based nonsurgical therapeutic and diagnostic interventions in the heart and great vessels in the chest; and invasive pediatric electrophysiologic procedures.

(3) Pediatric cardiac surgery and interventional procedure is a tertiary service as listed in WAC 246-310-020. To be granted a certificate of need for a pediatric cardiac surgery and interventional treatment center, a hospital must meet the standards in this section in addition to applicable review criteria in WAC 246-310-210, 246-310-220, 246-310-230, and 246-310-240.

(4) The department must review new pediatric cardiac surgery and interventional center applications using the concurrent review cycle in this section.

(a) Applicants must submit letters of intent between the first working day and last working day of August of each year.

(b) Initial applications must be submitted between the first working day and last working day of September of each year.

(c) The department shall screen initial applications for completeness by the last working day of October of each year.

(d) Responses to screening questions must be submitted by the last working day of November of each year.

(e) The public review and comment period for applications begins on December 16 of each year. If December 16 is not a working day in any year, then the public review and comment period begins on the first working day after December 16.

(f) The public comment period is limited to ninety days, unless extended according to the provisions of WAC 246-310-120 (2)(d). The first sixty days of the public comment period shall be reserved for receiving public comments and conducting a public hearing, if requested. The remaining thirty days shall be for the applicant or applicants to provide rebuttal statements to written or oral statements submitted during the first sixty-day period. Any interested person that:

(i) Is located or resides within the applicant's health service area;

(ii) Testified or submitted evidence at a public hearing; and

(iii) Requested in writing to be informed of the department's decision, must also be provided the opportunity to provide rebuttal statements to written or oral statements submitted during the first sixty-day period.

(g) The final review period is limited to sixty days, unless extended according to the provisions of WAC 246-310-120.

(5) The department may convert the review of an application that was initially submitted under the concurrent review cycle to a regular review process if the department determines that the application does not compete with another application.

(6) Any letter of intent or certificate of need application submitted for review in advance of this schedule, or certificate of need application under review as of the effective date of this section, shall be held by the department for review according to the schedule in this section.

(7) Standards.

(a) A minimum of one hundred pediatric cardiac surgical procedures (seventy-five with extracorporeal circulation) per year and a minimum of one hundred fifty catheterizations must be performed at a hospital with a pediatric cardiac sur-

gery and interventional treatment center by the third year of operation and each year thereafter.

(b) Hospitals applying for a pediatric cardiac surgery and interventional center certificate of need must demonstrate that they can meet one hundred ten percent of the minimum volume standards. The applicant hospital must provide data from CHARS demonstrating:

(i) The zip codes served by the applying hospital;

(ii) The percentage of the total hospital admissions for children ages zero through nineteen served by the applying hospital in each of the applicable zip codes during the most recent available three years data. Expired patients will not be counted;

(iii) The number of pediatric heart surgeries, number of therapeutic and diagnostic interventions and invasive electrophysiologic procedures performed in these zip codes during the most recent available three years data. The percentage established in (b)(ii) of this subsection shall then be applied to the number of pediatric heart surgeries, interventions and invasive electrophysiologic procedures. This number must be equal to or greater than one hundred ten percent of the minimum volume standards.

(c) The department will not grant a certificate of need to a new center if:

(i) The new center will reduce any existing center below one hundred ten percent of any one of the minimum volume standards; or

(ii) Reduces the volumes of any existing center that has not yet met any one of the minimum volume standards; or

(iii) Fails to meet any one of the center's minimum volume standards.

(d) At time of initiating the program, and thereafter, the director of the pediatric cardiac surgery and interventional center must be a U.S. board certified pediatric cardiologist.

(e) At time of initiating the program, and thereafter, pediatric cardiac surgery and interventional centers must have at least two U.S. board certified or board eligible cardiac surgeons on the staff. At least one of the required surgeons must be certified by the American Board of Thoracic Surgery. Board eligible status must not extend beyond five years.

(f) The program must provide twenty-four hour coverage.

(g) Hospitals with a pediatric cardiac surgery and interventional center must have plans for facilitating emergency access to heart surgery services at all times for the population they serve. These plans should, at minimum, include arrangements for addressing peak volume periods (such as joint agreements with other programs, the capacity to temporarily increase staffing, etc.), and the maintenance of or affiliation with emergency transportation services (including contingency plans for poor weather and known traffic congestion problems).

(h) Hospitals with a pediatric cardiology surgery and interventional center must provide a copy of the hospital's QI plan that includes/incorporates a section specific to the pediatric cardiac surgery and interventional center.

(i) If a certificate of need is issued, it will be conditioned, at a minimum, to require ongoing compliance with the certificate of need standards. Failure to meet the conditioned standards may be grounds for revocation or suspension of a hospital's certificate of need, or other appropriate licensing or certification action.

(j) In the event two or more centers are competing to meet the same forecasted net need, the department shall consider the following factors when determining which proposal best meets forecasted need:

(i) The most appropriate improvement in geographic access;

(ii) The most cost efficient service;

(iii) Minimizing impact on existing programs;

(iv) Providing the greatest breadth and depth of pediatric cardiovascular and support services; and

(v) Facilitating emergency access to care.

(k) Hospitals granted a certificate of need have three years from the date of initiating the program to meet the center procedure volume standards.

(l) These standards should be reevaluated every three years.

(8) Need forecasting method. The data used for evaluating applications submitted during the concurrent review cycle will be the most recent three years CHARS data available at the close of the application submittal period for that review cycle. Separate forecasts are to be made for heart surgery, interventions and electrophysiological procedures.

(a) Step 1. Compute the planning area's current capacity. When a new center is being established, the assumed volume of that center will be the greater of the actual volume or the minimum volume standards or the estimated volumes described in the approved application, including any adjustments made by the department in the course of review and approval.

(b) Step 2. Compute the percent of out-of-state use of the area's hospitals.

(c) Step 3. Compute the planning area's average age-specific use rates.

(d) Step 4. Multiply the planning area's age-specific use rates by the area's corresponding forecast year population. The sum of these figures equals the forecasted number of pediatric cardiac surgical and interventional procedures expected to be performed on Washington pediatric residents.

(e) Step 5. Increase the number of pediatric cardiac surgical and interventional procedures expected to occur within the planning area in accordance with the percent of procedures calculated as occurring in those hospitals on out-of-state residents, based on the average of the last three years. This figure equals the total forecasted number of procedures expected to occur within the hospital's planning area.

(f) Step 6. Calculate the net need for additional pediatric cardiac centers by subtracting the current capacity from the total forecasted pediatric cardiac surgical and interventional procedures.

(g) Step 7. The department will not grant a certificate of need for a new center if the need is less than the minimum volume standards. An exception may be made and a certificate of need granted if (g)(i) and (ii) of this subsection can be met:

(i) The applying hospital can meet all the other certificate of need criteria for a pediatric cardiac surgery and interventional treatment center (including documented evidence of capability of achieving the minimum volume standard); and

(ii) At least eighty percent of the results identified in subsection (7)(b)(iii) of this section for pediatric cardiac services received pediatric cardiac services more than seventy-five miles away.

(9) For the purposes of the forecasting method in this section, the following terms have the following specific meanings:

(a) Age-specific categories. The categories used in computing age-specific values will be zero through fourteen, fifteen through nineteen year olds.

(b) Current capacity. The planning area's current capacity for pediatric cardiac surgical and interventional procedures equals the sum of the highest reported annual volume for each hospital with an approved pediatric cardiac surgical and interventional center within the planning area. When a new center is being established, the assumed volumes of that center will be the greater of the actual volume or minimum volume standards or the estimated volumes described in the approved application, including any adjustments made by the department in the course of review and approval.

(c) Forecast year. Pediatric cardiac surgery and interventional service needs shall be based on forecasts for the fourth year after the certificate of need pediatric cardiac surgery and interventional concurrent review process.

(d) Pediatric cardiac surgery and intervention. Pediatric cardiac surgery and intervention means diagnosis related groups (DRGs) 104-111 and 115-116, as developed under the Centers for Medicare and Medicaid Services (CMS) contract. All adult cardiac procedures (ages twenty-one and over) are excluded. The department will update the list of codes administratively to reflect future revisions made by CMS to the DRGs to be considered in certificate of need definitions, analyses and decisions. The department's updates to DRGs will be based on the definition of pediatric heart surgery contained in subsection (2) of this section.

(e) Out-of-state use of planning area hospitals. The percent of out-of-state use of hospitals within the planning area will equal the percent of total pediatric cardiac surgery and interventional procedures occurring within the planning area's hospitals that were performed on patients from out-of-state (or on patients whose reported zip codes are invalid). The most recent available three years data will be used to compute out-of-state use of Washington hospitals.

(f) Planning area. For the purpose of pediatric cardiac surgery and intervention, the planning area is the state of Washington.

Use rate. The pediatric cardiac surgery and interventional use rate equals the number of procedures performed on the pediatric residents of the planning area.

(10) The data source for pediatric cardiac surgery and interventional procedures is the comprehensive hospital abstract reporting system (CHARS), office of hospital and patient data, department of health.

(11) The data source for population estimates and forecasts is the office of financial management population trends reports.

[Statutory Authority: Chapter 70.38 RCW and State Court of Appeals, Case # 23480-7-11. 04-24-016, § 246-310-263, filed 11/22/04, effective 12/23/04.]

WAC 246-310-270 Ambulatory surgery. (1) To receive approval, an ambulatory surgical facility must meet the following standards in addition to applicable review criteria in WAC 246-310-210, 246-310-220, 246-310-230, and 246-310-240.

(2) The area to be used to plan for operating rooms and ambulatory surgical facilities is the secondary health services planning area.

(3) Secondary health services planning areas are: San Juan, Whatcom, East Skagit, Whidbey-Fidalgo, Western North Olympic, East Clallam, East Jefferson, North Snohomish, Central Snohomish, East Snohomish, Southwest Snohomish, Kitsap, North King, East King, Central King, Southwest King, Southeast King, Central Pierce, West Pierce, East Pierce, Mason, West Grays Harbor, Southeast Grays Harbor, Thurston, North Pacific, South Pacific, West Lewis, East Lewis, Cowlitz-Wahkiakum-Skamania, Clark, West Klickitat, East Klickitat, Okanogan, Chelan-Douglas, Grant, Kittitas, Yakima, Benton-Franklin, Ferry, North Stevens, North Pend Oreille, South Stevens, South Pend Oreille, Southwest Lincoln, Central Lincoln, Spokane, Southwest Adams, Central Adams, Central Whitman, East Whitman, Walla Walla, Columbia, Garfield, and Asotin.

(4) Outpatient operating rooms should ordinarily not be approved in planning areas where the total number of operating rooms available for both inpatient and outpatient surgery exceeds the area need.

(5) When a need exists in planning areas for additional outpatient operating room capacity, preference shall be given to dedicated outpatient operating rooms.

(6) An ambulatory surgical facility shall have a minimum of two operating rooms.

(7) Ambulatory surgical facilities shall document and provide assurances of implementation of policies to provide access to individuals unable to pay consistent with charity care levels provided by hospitals affected by the proposed ambulatory surgical facility. The amount of an ambulatory surgical facility's annual revenue utilized to finance charity care shall be at least equal to or greater than the average percentage of total patient revenue, other than medicare or medicaid, that affected hospitals in the planning area utilized to provide charity care in the last available reporting year.

(8) The need for operating rooms will be determined using the method identified in subsection (9) of this section.

(9) Operating room need in a planning area shall be determined using the following method:

(a) Existing capacity.

(i) Assume the annual capacity of one operating room located in a hospital and not dedicated to outpatient surgery is ninety-four thousand two hundred fifty minutes. This is derived from scheduling forty-four hours per week, fifty-one weeks per year (allowing for five weekday holidays), a fifteen percent loss for preparation and clean-up time, and fifteen percent time loss to allow schedule flexibility. The resulting seventy percent productive time is comparable to the previously operating hospital commission's last definition of "billing minutes" which is the time lapse from administration of anesthesia until surgery is completed.

(ii) Assume the annual capacity of one operating room dedicated to ambulatory surgery is sixty-eight thousand eight hundred fifty minutes. The derivation is the same as (a)(i) of

this subsection except for twenty-five percent loss for prep/clean-up time and scheduling is for a thirty-seven and one-half hour week. Divide the capacity minutes by the average minutes per outpatient surgery (see (a)(vii) of this subsection). Where survey data are unavailable, assume fifty minutes per outpatient surgery, resulting in a capacity for one thousand three hundred seventy-seven outpatient surgeries per room per year.

(iii) Calculate the total annual capacity (in number of surgeries) of all dedicated outpatient operating rooms in the area.

(iv) Calculate the total annual capacity (in number of minutes) of the remaining inpatient and outpatient operating rooms in the area, including dedicated specialized rooms except for twenty-four hour dedicated emergency rooms. When dedicated emergency operating rooms are excluded, emergency or minutes should also be excluded when calculating the need in an area. Exclude cystoscopic and other special purpose rooms (e.g., open heart surgery) and delivery rooms.

(b) Future need.

(i) Project number of inpatient and outpatient surgeries performed within the hospital planning area for the third year of operation. This shall be based on the current number of surgeries adjusted for forecasted growth in the population served and may be adjusted for trends in surgeries per capita.

(ii) Subtract the capacity of dedicated outpatient operating rooms from the forecasted number of outpatient surgeries. The difference continues into the calculation of (b)(iv) of this subsection.

(iii) Determine the average time per inpatient and outpatient surgery in the planning area. Where data are unavailable, assume one hundred minutes per inpatient and fifty minutes per outpatient surgery. This excludes preparation and cleanup time and is comparable to "billing minutes."

(iv) Calculate the sum of inpatient and remaining outpatient (from (b)(ii) of this subsection) operating room time needed in the third year of operation.

(c) Net need.

(i) If (b)(iv) of this subsection is less than (a)(iv) of this subsection, divide their difference by ninety-four thousand two hundred fifty minutes to obtain the area's surplus of operating rooms used for both inpatient and outpatient surgery.

(ii) If (b)(iv) of this subsection is greater than (a)(iv) of this subsection, subtract (a)(iv) of this subsection from the inpatient component of (b)(iv) of this subsection and divide by ninety-four thousand two hundred fifty minutes to obtain the area's shortage of inpatient operating rooms. Divide the outpatient component of (b)(iv) of this subsection by sixty-eight thousand eight hundred fifty to obtain the area's shortage of dedicated outpatient operating rooms.

[Statutory Authority: RCW 70.38.135 and 70.38.919. 92-02-018 (Order 224), § 246-310-270, filed 12/23/91, effective 1/23/92. Statutory Authority: RCW 43.70.040. 91-02-049 (Order 121), recodified as § 246-310-270, filed 12/27/90, effective 1/31/91. Statutory Authority: RCW 70.38.919. 90-16-058 (Order 073), § 248-19-700, filed 7/27/90, effective 8/27/90.]

WAC 246-310-280 Kidney disease treatment centers—Definitions. The following definitions apply to WAC 246-310-280, 246-310-282, 246-310-284, 246-310-286, 246-310-287, 246-310-288, and 246-310-289:

(1) "Base year" means the most recent calendar year for which December 31 data is available as of the first day of the application submission period from the *Northwest Renal Network's Modality Report* or successor report.

(2) "Capital expenditures," as defined by Generally Accepted Accounting Principles (GAAP), are expenditures made to acquire tangible long-lived assets. Long-lived assets represent property and equipment used in a company's operations that have an estimated useful life greater than one year. Acquired long-lived assets are recorded at acquisition cost and include all costs incurred necessary to bring the asset to working order. The definition of a capital expenditure includes the following types of expenditures or acquisitions:

(a) A force account expenditure or acquisition (i.e., an expenditure for a construction project undertaken by a facility as its own contractor).

(b) The costs of any site planning services (architect or other site planning consultant) including but not limited to studies, surveys, designs, plans, working drawings, specifications, and other activities (including applicant staff payroll and employee benefit costs, consulting and other services which, under GAAP or Financial Accounting Standards Board (FASB) may be chargeable as an operating or nonoperating expense).

(c) Capital expenditure or acquisition under an operating or financing lease or comparable arrangement, or through donation, which would have required certificate of need review if the capital expenditure or acquisition had been made by purchase.

(d) Building owner tenant improvements including but not limited to: Asbestos removal, paving, concrete, contractor's general conditions, contractor's overhead and profit, electrical, heating, ventilation and air conditioning systems (HVAC), plumbing, flooring, rough and finish carpentry and millwork and associated labor and materials, and utility fees.

(e) Capital expenditures include donations of equipment or facilities to a facility.

(f) Capital expenditures do not include routine repairs and maintenance costs that do not add to the utility of useful life of the asset.

(3) "Concurrent review" means the process by which applications competing to provide services in the same planning area are reviewed simultaneously by the department. The department compares the applications to one another and these rules.

(4) "End-of-year data" means data contained in the fourth quarter modality report or successor report from the Northwest Renal Network. For these rules, end-of-year and year-end have the same meaning.

(5) "End-of-year in-center patients" means the number of in-center hemodialysis (HD) and self-dialysis training patients receiving in-center kidney dialysis at the end of the calendar year based on end-of-year data.

(6) "Kidney disease treatment center" means any place, institution, building or agency or a distinct part thereof equipped and operated to provide services, including outpatient dialysis, to persons who have end-stage renal disease (ESRD). In no case shall all stations at a given kidney disease treatment center be designated as self-dialysis training stations. For purposes of these rules, kidney disease treatment center and kidney dialysis facility have the same meaning.

(7) "Kidney dialysis facility" means any place, institution, building or agency or a distinct part thereof equipped and operated to provide services, including outpatient dialysis, to persons who have end-stage renal disease (ESRD). In no case shall all stations at a given kidney disease treatment center be designated as self-dialysis training stations. For purposes of these rules, kidney dialysis facility and kidney disease treatment center have the same meaning.

(8) "Planning area" means an individual geographic area designated by the department for which kidney dialysis station need projections are calculated. For purposes of kidney dialysis projects, planning area and service area have the same meaning.

(9) "Planning area boundaries": Each county is a separate planning area, except for the planning subareas identified for King, Snohomish, Pierce, and Spokane counties. If the United States Postal Service (USPS) changes zip codes in the defined planning areas, the department will update areas to reflect the revisions to the zip codes to be included in the certificate of need definitions, analyses and decisions.

(a) King County is divided by zip code into twelve planning areas as follows:

KING ONE	KING TWO	KING THREE
98028 Kenmore	98101 Business District	98070 Vashon
98103 Green Lake	98102 Eastlake	98106 White Center/West Seattle
98105 Laurelhurst	98104 Business District	98116 Alki/West Seattle
98107 Ballard	98108 Georgetown	98126 West Seattle
98115 View Ridge/Wedgwood	98109 Queen Anne	98136 West Seattle
98117 Crown Hill	98112 Madison/Capitol Hill	98146 West Seattle
98125 Lake City	98118 Columbia City	98168 Riverton
98133 Northgate	98119 Queen Anne	
98155 Shoreline/Lake Forest Park	98121 Denny Regrade	
98177 Richmond Beach	98122 Madrona	
98195 University of Washington	98134 Harbour Island	
	98144 Mt. Baker/Rainier Valley	
	98199 Magnolia	

KING FOUR	KING FIVE	KING SIX
98148 SeaTac	98003 Federal Way	98011 Bothell
98158 SeaTac	98023 Federal Way	98033 Kirkland
98166 Burien/Normandy Park		98034 Kirkland
98188 Tukwila/SeaTac		98052 Redmond
98198 Des Moines		98053 Redmond
		98072 Woodinville
		98077 Woodinville

KING SEVEN	KING EIGHT	KING NINE
98004 Bellevue	98014 Carnation	98055 Renton
98005 Bellevue	98019 Duvall	98056 Renton
98006 Bellevue	98024 Fall City	98058 Renton
98007 Bellevue	98045 North Bend	98059 Renton
98008 Bellevue	98065 Snoqualmie	98178 Skyway
98027 Issaquah		
98029 Issaquah		
98039 Medina		
98040 Mercer Island		
98074 Sammamish		
98075 Sammamish		

KING TEN	KING ELEVEN	KING TWELVE
98030 Kent	98001 Auburn	98022 Enumclaw
98031 Kent	98002 Auburn	
98032 Kent	98010 Black Diamond	
98038 Maple Valley	98047 Pacific	
98042 Kent	98092 Auburn	
98051 Ravensdale		

(b) Pierce County is divided into five planning areas as follows:

PIERCE ONE	PIERCE TWO	PIERCE THREE
98354 Milton	98304 Ashford	98329 Gig Harbor
98371 Puyallup	98323 Carbonade	98332 Gig Harbor
98372 Puyallup	98328 Eatonville	98333 Fox Island
98373 Puyallup	98330 Elbe	98335 Gig Harbor
98374 Puyallup	98360 Orting	98349 Lakebay
98375 Puyallup	98338 Graham	98351 Longbranch
98390 Sumner	98321 Buckley	98394 Vaughn
98391 Bonney Lake		

PIERCE FOUR	PIERCE FIVE
98402 Tacoma	98303 Anderson Island
98403 Tacoma	98327 DuPont
98404 Tacoma	98387 Spanaway
98405 Tacoma	98388 Steilacoom
98406 Tacoma	98430 Tacoma
98407 Ruston	98433 Tacoma
98408 Tacoma	98438 Tacoma
98409 Lakewood	98439 Lakewood
98416 Tacoma	98444 Parkland
98418 Tacoma	98445 Parkland
98421 Tacoma	98446 Parkland
98422 Tacoma	98447 Tacoma
98424 Fife	98467 University Place
98443 Tacoma	98498 Lakewood
98465 Tacoma	98499 Lakewood
98466 Fircrest	98580 Roy

(c) Snohomish County is divided into three planning areas as follows:

SNOHOMISH ONE	SNOHOMISH TWO	SNOHOMISH THREE
98223 Arlington	98201 Everett	98012 Mill Creek/Bothell
98241 Darrington	98203 Everett	98020 Edmonds/Woodway
98252 Granite Falls	98204 Everett	98021 Bothell
98271 Tulalip Reservation/ Marysville	98205 Everett	98026 Edmonds
98282 Camano Island	98208 Everett	98036 Lynnwood/Brier
98292 Stanwood	98251 Gold Bar	98037 Lynnwood
	98224 Baring	98043 Mountlake Terrace
	98258 Lake Stevens	98087 Lynnwood
	98270 Marysville	98296 Snohomish
	98272 Monroe	
	98275 Mukilteo	
	98288 Skykomish	
	98290 Snohomish	
	98294 Sultan	

(d) Spokane County is divided into two planning areas as follows:

SPOKANE ONE	SPOKANE TWO
99001 Airway Heights	99003 Chattaroy
99004 Cheney	99005 Colbert
99011 Fairchild Air Force Base	99006 Deer Park
99012 Fairfield	99009 Elk
99016 Greenacres	99021 Mead
99018 Latah	99025 Newman Lake
99019 Liberty Lake	99026 Nine Mile Falls

SPOKANE ONE	SPOKANE TWO
99022 Medical Lake	99027 Otis Orchards
99023 Mica	99205 Spokane
99030 Rockford	99207 Spokane
99031 Spangle	99208 Spokane
99036 Valleyford	99217 Spokane
99037 Veradale	99218 Spokane
99201 Spokane	99251 Spokane
99202 Spokane	
99203 Spokane	
99204 Spokane	
99206 Spokane Valley	
99212 Spokane Valley	
99216 Spokane/Spokane Valley	
99223 Spokane	
99224 Spokane	

(10) "Projection year" means the fourth year after the base year. For example, reviews using 2005 year-end data as the base year will use 2009 as the projection year.

(11) "Resident in-center patients" means in-center hemodialysis (HD) and self-dialysis training patients that reside within the planning area. If more than fifty percent of a facility's patients reside outside Washington state, the facility may include these out-of-state patients in the resident count for the planning area.

(12) "Service area" means an individual geographic area designated by the department for which kidney dialysis station need projections are calculated. For purposes of kidney dialysis projects, service area and planning area have the same meaning.

(13) "Training services" means services provided by a kidney dialysis facility to train patients for home dialysis. Types of home dialysis include at least, but are not limited to, the following:

(a) Home peritoneal dialysis (HPD); and

(b) Home hemodialysis (HHD).

[Statutory Authority: RCW 70.38.135. 06-24-050, § 246-310-280, filed 12/1/06, effective 1/1/07. Statutory Authority: Chapter 70.38 RCW. 96-24-052, § 246-310-280, filed 11/27/96, effective 12/28/96. Statutory Authority: RCW 70.38.135 (3)(c). 93-13-015 (Order 367), § 246-310-280, filed 6/7/93, effective 7/8/93. Statutory Authority: RCW 70.38.135 and 70.38.919. 92-02-018 (Order 224), § 246-310-280, filed 12/23/91, effective 1/23/92. Statutory Authority: RCW 43.70.040. 91-02-049 (Order 121), recodified as § 246-310-280, filed 12/27/90, effective 1/31/91. Statutory Authority: RCW 70.38.919. 90-16-058 (Order 073), § 248-19-701, filed 7/27/90, effective 8/27/90.]

WAC 246-310-282 Kidney disease treatment centers—Concurrent review cycle. The department will review kidney dialysis facility applications using the concurrent review cycle described in this section. There are four concurrent review cycles each year; a cycle begins in January, April, July and October.

(1) Applicants must submit applications for review according to the following table:

		Application Submission Period			Department Action	Application Review Period		
Concurrent Review Cycle	Letters of Intent Due	Receipt of Initial Application	End of Screening Period	Applicant Response	Beginning of Review Preparation	Public Comment Period (includes public hearing if requested)	Rebuttal Period	Exparte Period
Kidney Dialysis Facility Cycle 1	First working day through last working day of **January** of each year.	First working day through last working day of **February** of each year.	Last working day of **March** of each year.	Last working day of **April** of each year.	**May 1 through May 15**	**60-Day** Public comment period Begins May 16 of each year or the first working day after May 16.	**30-Day** Rebuttal period Applicant and affected party response to public comment.	**45-Day** Exparte period Department evaluation and decision.
Kidney Dialysis Facility Cycle 2	First working day through last working day of **April** of each year.	First working day through last working day of **May** of each year.	Last working day of **June** of each year.	Last working day of **July** of each year.	**August 1 through August 15**	**60-Day** Public comment period Begins August 16 of each year or the first working day after August 16.	**30-Day** Rebuttal period Applicant and affected party response to public comment.	**45-Day** Exparte period Department evaluation and decision.
Kidney Dialysis Facility Cycle 3	First working day through last working day of **July** of each year.	First working day through last working day of **August** of each year.	Last working day of **September** of each year.	Last working day of **October** of each year.	**November 1 through November 15**	**60-Day** Public comment period Begins November 16 of each year or the first working day after November 16.	**30-Day** Rebuttal period Applicant and affected party response to public comment.	**45-Day** Exparte period Department evaluation and decision.

		Application Submission Period			Department Action	Application Review Period		
Concurrent Review Cycle	Letters of Intent Due	Receipt of Initial Application	End of Screening Period	Applicant Response	Beginning of Review Preparation	Public Comment Period (includes public hearing if requested)	Rebuttal Period	Exparte Period
Kidney Dialysis Facility Cycle 4	First working day through last working day of **October** of each year.	First working day through last working day of **November** of each year.	Last working day of **December** of each year.	Last working day of **January** of each year.	**February 1 through February 15**	**60-Day** Public comment period Begins February 16 of each year or the first working day after February 16.	**30-Day** Rebuttal period Applicant and affected party response to public comment.	**45-Day** Exparte period Department evaluation and decision.

(2) The department should complete a concurrent review cycle within nine months. The department should complete the regular review process within six months.

(3) The department will notify applicants fifteen days prior to the scheduled decision date if it is unable to meet the deadline for making a decision on the application. In that event, the department will establish and commit to a new decision date.

(4) The department will not accept new applications for a planning area if there are any pending applications in that planning area filed under a previous concurrent review cycle or applications submitted prior to the effective date of these rules that affect any of the new planning areas, unless the department has not made a decision on the pending applications within the review timelines of nine months for a concurrent review and six months for a regular review.

(5) The department may convert the review of an application that was initially submitted under a concurrent review cycle to a regular review process if the department determines that the application does not compete with another application.

[Statutory Authority: RCW 70.38.135. 06-24-050, § 246-310-282, filed 12/1/06, effective 1/1/07.]

WAC 246-310-284 Kidney disease treatment centers—Methodology. A kidney dialysis facility that provides hemodialysis or peritoneal dialysis, training, or backup must meet the following standards in addition to applicable review criteria in WAC 246-310-210, 246-310-220, 246-310-230, and 246-310-240.

(1) Applications for new stations may only address projected station need in the planning area in which the facility is to be located.

(a) If there is no existing facility in an adjacent planning area, the application may also address the projected station need in that planning area.

(b) Station need projections must be calculated separately for each planning area within the application.

(2) Data used to project station need must be the most recent five-year resident in-center year-end patient data available from the Northwest Renal Network as of the first day of the application submission period, concluding with the base year at the time of application.

(3) Projected station need must be based on 4.8 resident in-center patients per station for all planning areas except Adams, Columbia, Douglas, Ferry, Garfield, Jefferson, Kittitas, Klickitat, Lincoln, Okanogan, Pacific, Pend Oreille, San Juan, Skamania, Stevens, and Wahkiakum counties. The projected station need for these exception planning areas must be based on 3.2 resident in-center patients per station.

(4) The number of dialysis stations projected as needed in a planning area shall be determined by using the following methodology:

(a) Determine the type of regression analysis to be used to project resident in-center station need by calculating the annual growth rate in the planning area using the year-end number of resident in-center patients for each of the previous six consecutive years, concluding with the base year.

(i) If the planning area has experienced less than six percent growth in any of the previous five annual changes calculations, use linear regression to project station need; or

(ii) If the planning area has experienced six percent or greater growth in each of the previous five annual changes, use nonlinear (exponential) regression to project station need.

(b) Project the number of resident in-center patients in the projection year using the regression type determined in (a) of this subsection. When performing the regression analysis use the previous five consecutive years of year-end data concluding with the base year. For example, if the base year is 2005, use year-end data for 2001 through 2005 to perform the regression analysis.

(c) Determine the number of dialysis stations needed to serve resident in-center patients in the planning area in the projection year by dividing the result of (b) of this subsection by the appropriate resident in-center patient per station number from subsection (3) of this section. In order to assure access, fractional numbers are rounded up to the nearest whole number. For example, 5.1 would be rounded to 6. Rounding to a whole number is only allowed for determining the number of stations needed.

(d) To determine the net station need for a planning area, subtract the number calculated in (c) of this subsection from the total number of certificate of need approved stations located in the planning area.

(5) Before the department approves new in-center kidney dialysis stations, all certificate of need approved stations in the planning area must be operating at 4.8 in-center patients per station for all planning areas except Adams, Columbia, Douglas, Ferry, Garfield, Jefferson, Kittitas, Klickitat, Lincoln, Okanogan, Pacific, Pend Oreille, San Juan, Skamania, Stevens, and Wahkiakum counties. For these exception planning areas all certificate of need approved stations in the planning area must be operating at 3.2 in-center

patients per station. Both resident and nonresident patients using the dialysis facility are included in this calculation. Data used to make this calculation must be from the most recent quarterly modality report or successor report from the Northwest Renal Network as of the first day of the application submission period.

(6) By the third full year of operation, new in-center kidney dialysis stations must reasonably project to be operating at:

(a) 4.8 in-center patients per station for those facilities required to operate at 4.8 in-center patients as identified in subsection (5) of this section; or

(b) 3.2 in-center patients per station for those facilities required to operate at 3.2 in-center patients as identified in subsection (5) of this section.

[Statutory Authority: RCW 70.38.135. 06-24-050, § 246-310-284, filed 12/1/06, effective 1/1/07.]

WAC 246-310-286 Kidney disease treatment centers—Standards for planning areas without an existing facility. Adams, Columbia, Douglas, Ferry, Garfield, Jefferson, Kittitas, Klickitat, Lincoln, Pacific, Pend Oreille, San Juan, Skamania, Stevens, and Wahkiakum planning areas do not have an existing kidney dialysis facility as of the effective date of these rules. The department will award the first project proposing to establish a facility in each of these planning areas a minimum of four stations provided the project meets applicable review criteria and standards. The facility must be projected to operate at 3.2 in-center patients per station by the third full year of operation. For purposes of this section, the applicant may supplement data obtained from the Northwest Renal Network with other documented demographic and utilization data to demonstrate station need.

[Statutory Authority: RCW 70.38.135. 06-24-050, § 246-310-286, filed 12/1/06, effective 1/1/07.]

WAC 246-310-287 Kidney disease treatment centers—Exceptions. The department shall not approve new stations in a planning area if the projections in WAC 246-310-284(4) show no net need, and shall not approve more than the number of stations projected as needed unless:

(1) All other applicable review criteria and standards have been met; and

(2) One or more of the following have been met:

(a) The department finds the additional stations are needed to be located reasonably close to the people they serve; or

(b) Existing dialysis stations in the dialysis facility are operating at six patients per station. Data used to make this calculation must be from the most recent quarterly modality report or successor report from the Northwest Renal Network as of the first day of the application submission period; or

(c) The applicant can document a significant change in ESRD treatment practice has occurred, affecting dialysis station use in the planning area; and

(3) The department finds that exceptional circumstances exist within the planning area and explains the approval of additional stations in writing.

[Statutory Authority: RCW 70.38.135. 06-24-050, § 246-310-287, filed 12/1/06, effective 1/1/07.]

WAC 246-310-288 Kidney disease treatment centers—Tie-breakers. If two or more applications meet all applicable review criteria and there is not enough station need projected for all applications to be approved, the department will use tie-breakers to determine which application or applications will be approved. The department will approve the application accumulating the largest number of points. If sufficient additional stations remain after approval of the first application, the department will approve the application accumulating the next largest number of points, not to exceed the total number of stations projected for a planning area. If the applications remain tied after applying all the tie-breakers, the department will award stations as equally as possible among those applications, without exceeding the total number of stations projected for a planning area.

(1) The department will award one point per tie-breaker to any applicant that meets a tie-breaker criteria in this subsection.

(a) ***Training services (1 point)*:**

(i) The applicant is an existing provider in the planning area and either offers training services at the facility proposed to be expanded or offers training services in any of its existing facilities within a thirty-five mile radius of the existing facility; or

(ii) The applicant is an existing provider in the planning area that offers training services in any of its existing facilities within thirty-five miles of the proposed new facility and either intends to offer training services at the new facility or through those existing facilities; or

(iii) The applicant, not currently located in the planning area, proposes to establish a new facility with training services and demonstrates a historical and current provision of training services at its other facilities; and

(iv) Northwest Renal Network's most recent year-end facility survey must document the provision of these training services by the applicant.

(b) ***Private room(s) for isolating patients needing dialysis (1 point)*.**

(c) ***Permanent bed stations at the facility (1 point)*.**

(d) ***Evening shift (1 point)*:** The applicant currently offers, or as part of its application proposes to offer at the facility a dialysis shift that begins after 5:00 p.m.

(e) ***Meeting the projected need (1 point)*:** Each application that proposes the number of stations that most closely approximates the projected need.

(2) Only one applicant may be awarded a point for each of the following four tie-breaker criteria:

(a) ***Economies of scale (1 point)*:** Compared to the other applications, an applicant demonstrates its proposal has the lowest capital expenditure per new station.

(b) ***Historical provider (1 point)*:**

(i) The applicant was the first to establish a facility within a planning area; and

(ii) The application to expand the existing facility is being submitted within five years of the opening of its facility; or

(iii) The application is to build an additional new facility within five years of the opening of its first facility.

(c) ***Patient geographical access (1 point)*:** The application proposing to establish a new facility within a planning area that will result in services being offered closer to people

in need of them. The department will award the point for the facility located farthest away from existing facilities within the planning area provided:

(i) The facility is at least three miles away from the next closest existing facility in planning areas that qualify for 4.8 patients per station; or

(ii) The facility is at least eight miles from the next closest existing facility in planning areas that qualify for 3.2 patients per station.

(d) ***Provider choice (1 point)*:**

(i) The applicant does not currently have a facility located within the planning area;

(ii) The department will consider a planning area as having one provider when a single provider has multiple facilities in the same planning area;

(iii) If there are already two unrelated providers located in the same planning area, no point will be awarded.

[Statutory Authority: RCW 70.38.135. 06-24-050, § 246-310-288, filed 12/1/06, effective 1/1/07.]

WAC 246-310-289 Kidney disease treatment centers—Relocation of facilities. (1) When an entire facility proposes to relocate to another planning area, a new health care facility is considered to be established under WAC 246-310-020(1).

(2) When an existing facility proposes to relocate a portion of its stations to either another planning area or within the same planning area, a new health care facility is considered to be established under WAC 246-310-020(1).

(3) When an entire facility proposes to relocate within the same planning area, a new health care facility is not considered to be established under WAC 246-310-020(1) if:

(a) The existing facility ceases operation;

(b) No new stations are added to the replacement facility;

(c) There is no break in service between the closure of the existing facility and the operation of the replacement facility;

(d) The existing facility has been in operation for at least five years at its present location; and

(e) The existing facility has not been purchased, sold or leased within the past five years.

[Statutory Authority: RCW 70.38.135. 06-24-050, § 246-310-289, filed 12/1/06, effective 1/1/07.]

WAC 246-310-290 Hospice services—Standards and need forecasting method. The following rules apply to any in-home services agency licensed to provide hospice services which has declared an intent to become medicare certified as a provider of hospice services in a designated service area.

(1) Definitions.

(a) "ADC" means average daily census and is calculated by:

(i) Multiplying projected annual agency admissions by the most recent average length of stay in Washington (based on Centers for Medicare and Medicaid Services (CMS) data) to derive the total annual days of care; and

(ii) Dividing this total by three hundred sixty-five (days per year) to determine the ADC.

(b) "Current supply of hospice providers" means:

(i) Services of all providers that are licensed and medicare certified as a provider of hospice services or that have a valid (unexpired) certificate of need but have not yet obtained a license; and

(ii) Hospice services provided directly by health maintenance organizations who are exempt from the certificate of need program. Health maintenance organization services provided by an existing provider will be counted under (b)(i) of this subsection.

(c) "Current hospice capacity" means:

(i) For hospice agencies that have operated (or been approved to operate) in the planning area for three years or more, the average number of admissions for the last three years of operation; and

(ii) For hospice agencies that have operated (or been approved to operate) in the planning area for less than three years, an ADC of thirty-five and the most recent Washington average length of stay data will be used to calculate assumed annual admissions for the agency as a whole for the first three years.

(d) "Hospice agency" or "in-home services agency licensed to provide hospice services" means a person administering or providing hospice services directly or through a contract arrangement to individuals in places of temporary or permanent residence under the direction of an interdisciplinary team composed of at least a nurse, social worker, physician, spiritual counselor, and a volunteer and, for the purposes of certificate of need, is or has declared an intent to become medicaid eligible or certified as a provider of services in the medicare program.

(e) "Hospice services" means symptom and pain management provided to a terminally ill individual, and emotional, spiritual and bereavement support for the individual and family in a place of temporary or permanent residence and may include the provision of home health and home care services for the terminally ill individual.

(f) "Planning area" means each individual county designated by the department as the smallest geographic area for which hospice services are projected. For the purposes of certificate of need, a planning or combination of planning areas may serve as the service area.

(g) "Service area" means, for the purposes of certificate of need, the geographic area for which a hospice agency is approved to provide medicare certified or medicaid eligible services and which consist of one or more planning areas.

(2) The department shall review hospice applications using the concurrent review cycle in this section, except when the sole hospice provider in the service area ceases operation. Applications to meet this need may be accepted and reviewed in accordance with the regular review process.

(3) Applications must be submitted and reviewed according to the following schedule and procedures:

(a) Letters of intent must be submitted between the first working day and last working day of September of each year.

(b) Initial applications must be submitted between the first working day and last working day of October of each year.

(c) The department shall screen initial applications for completeness by the last working day of November of each year.

(d) Responses to screening questions must be submitted by the last working day of December of each year.

(e) The public review and comment for applications shall begin on January 16 of each year. If January 16 is not a working day in any year, then the public review and comment period must begin on the first working day after January 16.

(f) The public comment period is limited to ninety days, unless extended according to the provisions of WAC 246-310-120 (2)(d). The first sixty days of the public comment period must be reserved for receiving public comments and conducting a public hearing, if requested. The remaining thirty days must be for the applicant or applicants to provide rebuttal statements to written or oral statements submitted during the first sixty-day period. Also, any interested person that:

(i) Is located or resides within the applicant's health service area;

(ii) Testified or submitted evidence at a public hearing; and

(iii) Requested in writing to be informed of the department's decision, shall also be provided the opportunity to provide rebuttal statements to written or oral statements submitted during the first sixty-day period.

(g) The final review period shall be limited to sixty days, unless extended according to the provisions of WAC 246-310-120 (2)(d).

(4) Any letter of intent or certificate of need application submitted for review in advance of this schedule, or certificate of need application under review as of the effective date of this section, shall be held by the department for review according to the schedule in this section.

(5) When an application initially submitted under the concurrent review cycle is deemed not to be competing, the department may convert the review to a regular review process.

(6) Hospice agencies applying for a certificate of need must demonstrate that they can meet a minimum average daily census (ADC) of thirty-five patients by the third year of operation. An application projecting an ADC of under thirty-five patients may be approved if the applicant:

(a) Commits to maintain medicare certification;

(b) Commits to serve one or more counties that do not have any medicare certified providers; and

(c) Can document overall financial feasibility.

(7) Need projection. The following steps will be used to project the need for hospice services.

(a) Step 1. Calculate the following four statewide predicted hospice use rates using CMS and department of health data or other available data sources.

(i) The predicted percentage of cancer patients sixty-five and over who will use hospice services. This percentage is calculated by dividing the average number of hospice admissions over the last three years for patients the age of sixty-five and over with cancer by the average number of past three years statewide total deaths sixty-five and over from cancer.

(ii) The predicted percentage of cancer patients under sixty-five who will use hospice services. This percentage is calculated by dividing the average number of hospice admissions over the last three years for patients under the age of sixty-five with cancer by the current statewide total of deaths under sixty-five with cancer.

(iii) The predicted percentage of noncancer patients sixty-five and over who will use hospice services. This percentage is calculated by dividing the average number of hospice admissions over the last three years for patients age sixty-five and over with diagnoses other than cancer by the current statewide total of deaths over sixty-five with diagnoses other than cancer.

(iv) The predicted percentage of noncancer patients under sixty-five who will use hospice services. This percentage is calculated by dividing the average number of hospice admissions over the last three years for patients under the age of sixty-five with diagnoses other than cancer by the current statewide total of deaths under sixty-five with diagnoses other than cancer.

(b) Step 2. Calculate the average number of total resident deaths over the last three years for each planning area.

(c) Step 3. Multiply each hospice use rate determined in Step 1 by the planning areas average total resident deaths determined in Step 2.

(d) Step 4. Add the four subtotals derived in Step 3 to project the potential volume of hospice services in each planning area.

(e) Step 5. Inflate the potential volume of hospice service by the one-year estimated population growth (using OFM data).

(f) Step 6. Subtract the current hospice capacity in each planning area from the above projected volume of hospice services to determine unmet need.

(g) Determine the number of hospice agencies in the proposed planning area which could support the unmet need with an ADC of thirty-five.

(8) In addition to demonstrating need under subsection (7) of this section, hospice agencies must meet the other certificate of need requirements including WAC 246-310-210 - Determination of need, WAC 246-310-220 - Determination of financial feasibility, WAC 246-310-230 - Criteria for structure and process of care, and WAC 246-310-240 - Determination of cost containment.

(9) If two or more hospice agencies are competing to meet the same forecasted net need, the department shall consider at least the following factors when determining which proposal best meets forecasted need:

(a) Improved service in geographic areas and to special populations;

(b) Most cost efficient and financially feasible service;

(c) Minimum impact on existing programs;

(d) Greatest breadth and depth of hospice services;

(e) Historical provision of services; and

(f) Plans to employ an experienced and credentialed clinical staff with expertise in pain and symptom management.

(10) Failure to operate the hospice agency in accordance with the certificate of need standards may be grounds for revocation or suspension of an agency's certificate of need, or other appropriate action.

[Statutory Authority: Chapters 70.127 and 70.38 RCW. 03-07-096, § 246-310-290, filed 3/19/03, effective 4/19/03.]

WAC 246-310-295 Hospice care center—Standards. The following rules apply to any in-home services agency licensed to provide hospice services, that is or has declared an intent to become additionally licensed to provide hospice care center services.

(1) Definitions.

(a) "Applicant" means an in-home services agency licensed to provide hospice services under chapter 246-335 WAC.

(b) "Hospice care center" means a homelike, noninstitutional facility where hospice services are provided, and that meet the requirements for operation under RCW 70.127.280 and chapter 246-335 WAC.

(2) The department shall review hospice care center applications using the concurrent review cycle in this section.

(3) Applications must be submitted and reviewed according to the following schedule and procedures.

(a) Letters of intent must be submitted between the first working day and last working day of October of each year.

(b) Initial applications must be submitted between the first working day and last working day of November of each year.

(c) The department shall screen initial applications for completeness by the last working day of December of each year.

(d) Responses to screening questions must be submitted by the last working day of January of each year.

(e) The public review and comment for applications begins on February 16 of each year. If February 16 is not a working day in any year, then the public review and comment period must begin on the first working day after February 16.

(f) The public comment period is limited to ninety days, unless extended under WAC 246-310-120 (2)(d). The first sixty days of the public comment period must be reserved for receiving public comments and conducting a public hearing, if requested. The remaining thirty days must be for the applicant or applicants to provide rebuttal statements to written or oral statements submitted during the first sixty-day period. Any interested person that:

(i) Is located or resides within the applying hospice agency's health service area;

(ii) Testified or submitted evidence at a public hearing; and

(iii) Requested in writing to be informed of the department's decision, shall also be provided the opportunity to provide rebuttal statements to written or oral statements submitted during the first sixty-day period.

(g) The final review period is limited to sixty days, unless extended under WAC 246-310-120 (2)(d).

(4) Any letter of intent or certificate of need application submitted for review in advance of this schedule, or certificate of need application under review as of the effective date of this section, shall be held by the department for review according to the schedule in this section.

(5) If an application initially submitted under the concurrent review cycle is deemed not to be competing, the department may convert the review to a regular review process.

(6) An applicant must provide the following documentation to demonstrate that the applicant's existing patient base is sufficient to support the creation of the hospice care center.

(a) Step 1. Determine the average total days of care provided in the applicant's preceding three years of operation. If the applicant has been in operation for less than three years, assume an ADC of thirty-five to calculate potential days of care;

(b) Step 2. Multiply the above average days of care by the applicant's annual percentage of patients requiring care in settings other than their private home to estimate the number of potential patient days. If the applicant has been in operation for less than three years, multiply the potential days of care by the statewide percentage of hospice patients requiring care in settings other than their private home;

(c) Step 3. Divide the estimated number of patient days by three hundred sixty-five (days per year) to estimate the average daily census for the applicant;

(d) Step 4. Assume a minimum occupancy of sixty-five percent to determine the number of beds the applicant could request in their application.

(7) If applying for more beds than provided for in subsection (6) of this section, the applicant must provide documentation, methodology and assumptions that support the applicant's ability to sustain the additional beds.

(8) The following occupancy requirements apply to all applicants:

(a) The average occupancy rate of the beds in the center must be projected to be at least fifty percent for the first three years following completion of the project;

(b) A minimum occupancy rate of sixty-five percent should be maintained after the first three years of operation; and

(c) If applying to add beds to an existing hospice care center the applicant must document that the average occupancy of the beds in the hospice care center was at least eighty percent for the nine months immediately preceding the submittal of the proposal.

(9) The applicant must document that they can maintain the minimum occupancy rate and still meet the following requirements:

(a) No more than forty-nine percent of the hospice agency's patient care days, in the aggregate on a biennial basis, can be provided in the hospice care center, under RCW 70.127.280; and

(b) The maximum number of beds in a hospice care center is twenty, under chapter 70.127 RCW.

(10) Failure to operate the hospice care center in accordance with the application relied upon by the department in making its decision may be grounds for revocation or suspension of a center's certificate of need, or other appropriate action.

[Statutory Authority: Chapters 70.127 and 70.38 RCW. 03-07-096, § 246-310-295, filed 3/19/03, effective 4/19/03.]

WAC 246-310-360 Nursing home bed need method. For all applications where the need for nursing home beds is not deemed met as identified in RCW 70.38.115(13), the following mathematical calculation will be used as a guideline and represent only one component of evaluating need:

(1) The department shall calculate the statewide and planning area specific estimated bed need for the projection year by multiplying the estimated statewide and planning area specific resident population for the projection year by the established ratio;

(2) The department shall then calculate the projected current supply ratio statewide and for each planning area. The current supply ratio shall be computed from the most recent

bed supply and the projection year estimate of resident population.

(3) The department shall next determine the areas of the state that will be under the established ratio, or over the established ratio in the projection year by comparing each planning area's projected current supply ratio to the established ratio.

(4) The department shall compare the most recent statewide bed supply with the statewide estimated bed need.

(a) If the current statewide bed supply is greater than or equal to the statewide estimated bed need, then calculation of statewide need for new beds ends.

(b) If the current statewide bed supply is less than the statewide estimated bed need, the department shall determine the difference between the statewide estimated bed need and the statewide current bed supply, which shall be called statewide available beds.

(i) If the number of statewide available beds is large enough, the department shall assign to each planning area under the established ratio the number of beds necessary to bring it up to the established ratio in the projection year.

(ii) If the number of statewide available beds is insufficient to assign each planning area under the established ratio the number of new beds necessary to bring it up to the established ratio, the department shall assign to each planning area under the established ratio a proportion of statewide available beds equal to the ratio of that planning area's bed need to reach the established ratio to the total beds required for all planning areas under the established ratio to reach the established ratio in the projection year.

(iii) The department shall not assign more new beds to a planning area than the number which, when added to the planning area's bed supply, will raise the planning area's bed-to-population ratio to the greater of the established ratio and the statewide current ratio.

[Statutory Authority: Chapter 70.38 RCW. 96-24-052, § 246-310-360, filed 11/27/96, effective 12/28/96. Statutory Authority: RCW 43.70.040. 91-02-049 (Order 121), recodified as § 246-310-360, filed 12/27/90, effective 1/31/91. Statutory Authority: RCW 70.38.919. 90-12-071 (Order 062), § 248-19-805, filed 6/1/90, effective 7/1/90.]

WAC 246-310-370 Nursing home bed need method revision. (1) The department shall review the projection method and may make changes in accordance with the following process:

(a) The appropriate consumer and provider representatives and the department of social and health services shall be notified of the department's plan to evaluate the projection method and be provided information on the process for participating in the evaluation;

(b) Proposed revisions to the projection method shall be developed in consultation with the responding representatives. An opportunity for public comment on the proposed revisions to the projection method will be provided prior to filing the proposed rules.

(2) When reviewing the projection method the department shall consider the following:

(a) The national bed-to-population ratio and the bed-to-population ratios of other states judged by the aging and adult services administration of the department of social and health services to have reasonable and progressive long-term care policies;

(b) Data and information provided by provider and consumer representatives;

(c) State governmental policy goals for distributing scarce resources between nursing homes and other institutional or community based services;

(d) The effects of developments in the delivery or financing of long-term care services on nursing home bed need; and

(e) Progress in developing other long-term care services for the statewide resident population.

[Statutory Authority: Chapter 70.38 RCW. 96-24-052, § 246-310-370, filed 11/27/96, effective 12/28/96. Statutory Authority: RCW 43.70.040. 91-02-049 (Order 121), recodified as § 246-310-370, filed 12/27/90, effective 1/31/91. Statutory Authority: RCW 70.38.919. 90-12-071 (Order 062), § 248-19-806, filed 6/1/90, effective 7/1/90.]

WAC 246-310-380 Nursing home bed need standards. (1) The department shall use the following rules in conjunction with the certificate of need review criteria contained in WAC 246-310-210(1) for applications proposing the following:

(a) Construction, development, or other establishment of a new nursing home;

(b) Increase in the licensed bed capacity of a nursing home or a hospital long-term care unit;

(c) Change in license category of beds from the following to nursing home or hospital long-term care unit beds:

(i) Acute care, or

(ii) Boarding home care;

(2) The department shall comply with the following time schedule for developing bed need projections:

(a) By the last working day in January of each year, the department shall recalculate the estimated bed projection for each planning-area.

(b) By the last working day in January of each year, the department shall provide the aging and adult services administration of the department of social and health services with the estimated bed need for each planning-area, pending the department's decisions on applications submitted during the previous year's nursing home concurrent review cycles.

(c) By the last working day in January of each year, the department shall rank order planning-areas from lowest to highest by the projected current supply ratio.

(d) By the first working day of June of each year, the department shall calculate the net estimated bed need for each planning-area.

(3) The estimated bed projections for the projection period, listed by planning area will be updated annually and distributed to interested parties. When a planning-area's estimated bed projection is less than the planning-area's bed supply as defined by WAC 246-310-350(4), no beds can be added until the statewide established ratio is reached, except as allowed in this section.

(4) The department shall limit to three hundred the total number of nursing home beds approved for all CCRCs which propose or are operating within a transition period.

(a) These three hundred beds available for CCRCs during transition periods shall be in addition to the net nursing home beds needed in all of the planning-areas.

(b) All nursing home beds approved for CCRCs which propose or are operating within a transition period shall be counted as beds within this three hundred bed limitation unless and until the CCRC fully complies with all provisions of the CCRCs performance standards.

(5) The department shall not issue certificates of need approving more than the net estimated bed need indicated for a given planning-area, unless:

(a) The department finds such additional beds are needed to be located reasonably close to the people they serve; and

(b) The department explains such approval in writing.

[Statutory Authority: Chapter 70.38 RCW. 96-24-052, § 246-310-380, filed 11/27/96, effective 12/28/96. Statutory Authority: RCW 70.38.135. 91-15-018 (Order 179), § 246-310-380, filed 7/10/91, effective 8/10/91. Statutory Authority: RCW 43.70.040. 91-02-049 (Order 121), recodified as § 246-310-380, filed 12/27/90, effective 1/31/91. Statutory Authority: RCW 70.38.919. 90-12-072 (Order 063), § 248-19-810, filed 6/1/90, effective 7/1/90.]

WAC 246-310-390 Nursing home bed need adjustments. (1) The department shall use the procedures described in this section to make adjustments to planning area net estimated bed need.

(2) For planning areas for which a nursing home review is scheduled or is ongoing, the department shall use the following procedures to adjust a planning area's net estimated bed need between April tenth or the first working day thereafter and the last working day in January of the following year.

(a) Where an increase in the bed supply of a planning area results in a reduction in net estimated bed need, the department shall use the following procedures:

(i) When a reduction in net estimated bed need occurs prior to the date of beginning of review for the applicable concurrent review cycle, the department shall:

(A) Inform, in writing, all persons from whom the department has received an application and/or a valid letter of intent of the reduction; and

(B) Explain the procedures for withdrawing or amending a certificate of need application.

(ii) When a reduction in net estimated bed need occurs after the date of beginning of review for the applicable concurrent review cycle, the department shall use the need projected at the time the review began in reaching a decision on each affected application.

(b) Where a decrease in the bed supply of a planning area results in the increase in net estimated bed need, the department shall:

(i) Use the following policies:

(A) If such a decrease in the bed supply would result in a planning area being under the established ratio, the department shall:

(I) Assign to the planning area only enough beds for the planning area to reach the established ratio in the projection year, but not to exceed the number of beds which closed; and

(II) Redistribute any remaining beds to planning areas statewide through the next scheduled recalculation of estimated projections for all planning areas.

(B) If such decrease in the bed supply would not make a planning area under the established ratio, the department shall redistribute any remaining beds to planning areas statewide through the next scheduled recalculation of baseline projections for all planning areas.

(ii) Subject to the provisions of (b)(i) of this subsection, use the following procedures:

(A) When an increase in net estimated bed need can be made prior to the last day on which the department can accept amendments to applications under review, the department shall:

(I) Notify all affected applicants in writing; and

(II) Explain to each affected applicant the procedures for amending a certificate of need application.

(B) When an increase cannot be made prior to the last day on which the department can accept amendments to applications under review, the department shall include the increased net estimated bed need in any subsequent decisions on each affected application or the next applicable concurrent review cycle, whichever occurs first.

(3) For planning areas for which a nursing home review is not scheduled or ongoing, the department shall use the following procedures to adjust a planning area's net estimated bed need between April tenth or the first working day thereafter and the last working day in January of the following year:

(a) If a decrease in the bed supply would make a planning area under the established ratio, the department shall:

(i) Assign to the planning area only enough beds for the planning area to reach the established ratio in the projection year; and

(ii) Redistribute any remaining beds to planning areas statewide through the next scheduled recalculation of baseline projections for all planning areas.

(b) If such decrease in the bed supply would not result in a planning area being under the established ratio, the department shall redistribute any remaining beds to planning areas statewide through the next scheduled recalculation of baseline projections for all planning areas.

[Statutory Authority: Chapter 70.38 RCW. 96-24-052, § 246-310-390, filed 11/27/96, effective 12/28/96. Statutory Authority: RCW 43.70.040. 91-02-049 (Order 121), recodified as § 246-310-390, filed 12/27/90, effective 1/31/91. Statutory Authority: RCW 70.38.919. 90-12-072 (Order 063), § 248-19-811, filed 6/1/90, effective 7/1/90.]

WAC 246-310-395 Nursing home bed banking for alternative use notice requirements. In the case of a nursing home licensee, requesting to convert some of the nursing home beds to an alternative use, as defined in RCW 70.38.111(8), or reduce the number of beds per room to two or one, or otherwise enhance the quality of life for residents and preserve the right to later convert the original portion of the facility back to skilled nursing care, the nursing home shall give notice of intent to preserve its conversion options to the department of health.

(1) Notice of the nursing homes intent to preserve conversion options shall be given to the department of health no later than thirty days after the effective date of the license modification made by the nursing home licensing authority. Such notices shall be signed by the licensee and include the following:

(a) A description of the alternative service to be provided or a description of how the proposed bed banking will have a

direct and immediate benefit to the quality of life of the residents and a listing of the number of beds, by room number;

(b) A projected timeline for implementation; and

(c) In the event the nursing home licensee, as defined by WAC 246-310-010, is not the nursing home owner, the licensee shall document whether the building owner has a secured interest in the beds.

- If the building owner does have a secured interest in the beds, the licensee shall provide a written statement, signed by the building owner, indicating approval of the bed reduction.
- If the building owner does not have a secured interest in the beds, the licensee shall provide documentation showing that the building owner has been notified of the bed reduction.

(2) The department shall notify the nursing home, as to whether the proposal meets the requirements of RCW 70.38.-111 (8)(a) and if conversion rights are recognized. The nursing home does not forfeit its right to bank beds under this section if the department does not respond within this thirty-day time frame, nor does the nursing home obtain rights that it otherwise would not have under applicable statutes or rules if the department does not respond within the thirty-day time frame.

(3) The licensee shall notify the department of health at the time the alternative service or services commences.

(4) In the event the facility decides to modify the room numbers or alternative uses for the beds that have been banked, notification to the department is necessary to assure continued compliance with RCW 70.38.111 (8)(a) and WAC 246-310-395.

(5) Notice of intent to convert beds back to nursing home bed use shall be given to the department of health and the department of social and health services a minimum of ninety days prior to the effective date of the licensure modification made by the nursing home licensing authority reflecting the restored beds unless construction is required to convert the beds back. In the event the beds are not converted back to nursing home beds within sixty days of the date stated in the notice of intent, a notice of intent will need to be resubmitted a minimum of ninety days prior to the effective date of the licensure modification.

(6) In the event construction is required to convert beds back to nursing home bed use, notice shall be given to the department of health and department of social and health services a minimum of one year prior to the effective date of licensure modification made by the nursing home licensing authority reflecting the restored beds. The same life and safety code requirements as existed at the time the nursing home voluntarily reduced its licensed beds shall be complied with unless waivers from such requirements were issued, in which case the converted beds shall reflect the conditions or standards that then existed pursuant to the approved waivers. In the event the beds are not converted back to nursing home beds within sixty days of the date stated in the notice of intent, a notice of intent will need to be resubmitted a minimum of one year prior to the effective date of the licensure modification. The term "construction," as used in this section, is limited to those projects that are expected to equal or exceed the expenditure minimum amount, as determined under chapter 70.38 RCW.

(7) Prior to any license modification to convert beds back to nursing home beds under this section, the licensee must demonstrate that the nursing home meets the certificate of need exemption requirements under WAC 246-310-043.

[Statutory Authority: Chapter 70.38 RCW. 98-17-099, § 246-310-395, filed 8/19/98, effective 9/19/98; 98-10-053, § 246-310-395, filed 4/29/98, effective 5/30/98; 96-24-052, § 246-310-395, filed 11/27/96, effective 12/28/96.]

WAC 246-310-396 Nursing home bed banking requirements for full facility closure. In the case of a nursing home licensee, as defined in WAC 246-310-010 ceasing operation as a nursing home or any other party who has secured an interest in the beds and requesting to retain the nursing home bed allocation, pursuant to RCW 70.38.115 (13)(b), the licensee or other party who has secured an interest in the beds shall give notice to the department of health.

(1) Notice of the nursing homes intent to retain the nursing home bed allocation shall be given to the department of health no later than thirty days after the effective date of the homes closure. Such notices shall be signed by the licensee and include the following:

(a) The name of the facility ceasing operation;

(b) The number of beds in the bed allocation to be retained;

(c) Documentation of the effective date of the facility closure;

(d) The name, address, and telephone number of a contact person;

(e) Documentation as to whether the applicant is the licensee who has operated the beds for at least one year immediately preceding the reservation of the beds; and

(f) In the event the nursing home licensee, as defined by WAC 246-310-010, is not the nursing home owner, the licensee shall document whether the building owner or other party has a secured interest in the beds.

- If the building owner or other party does have a secured interest in the beds, the licensee shall provide a written statement, signed by the building owner or other party, indicating approval of the facility's closure.
- If the building owner or other party does not have a secured interest in the beds, the licensee shall provide documentation showing that the building owner or other party has been notified of the facility's closure.

(2) Notice shall be in written form addressed to the certificate of need program and signed by an authorized representative of the nursing home or other party who has secured an interest in the beds.

(3) The department shall respond within thirty days of the notice confirming that the rights to the bed allocation have been retained and the date the retained bed right will expire, provided no certificate of need is issued to replace the beds. The nursing home does not forfeit its right to bank beds under this section if the department does not respond within the thirty-day time frame, nor does the nursing home obtain rights that it otherwise would not have under applicable statutes or rules if the department does not respond within the given time frame.

(4) Certificate of need review shall be required for any party who has reserved the nursing home beds except that the

need criteria shall be deemed met when the applicant is the licensee who has operated the beds for at least one year immediately preceding the reservation of the beds, and who is replacing the beds in the same planning area.

[Statutory Authority: Chapter 70.38 RCW. 98-10-053, § 246-310-396, filed 4/29/98, effective 5/30/98; 96-24-052, § 246-310-396, filed 11/27/96, effective 12/28/96.]

WAC 246-310-397 Nursing home bed replacement notice requirements. In the case of a nursing home licensee wanting to replace nursing home beds pursuant to WAC 246-310-044, the nursing home shall give notice of intent to replace the beds to the department of health.

Notice of the nursing home licensees intent to replace the nursing home beds shall be given to the department a minimum of thirty days prior to initiating the replacement project. Such notices shall be signed by the licensee and include the following:

(1) Documentation that the applicant is the existing licensee at all affected facilities and has operated the beds at all affected facilities for at least one year immediately preceding the replacement exemption request fulfilling the notice requirements of this section;

(2) An affidavit from the applicant that the applicant intends to be the licensee at all affected facilities at the time of project completion. This affidavit shall include a statement that the applicant acknowledges the project can not be completed if the applicant is not the licensee at the time of project completion except as allowed for under the provisions of RCW 70.38.115(14);

(3) In the event the nursing home licensee, as defined by WAC 246-310-010, is not the nursing home owner, the licensee shall document whether the building owner has a secured interest in the beds.

(a) If the building owner does have a secured interest in the beds, the licensee shall provide a written statement, signed by the building owner, indicating approval of the bed replacement. In the event that the licensee is unable to complete the replacement project, as referenced in RCW 70.38.-115(14), the building owner shall be permitted to complete the project.

(b) If the building owner does not have a secured interest in the beds, the licensee shall provide documentation showing that the building owner has been notified of the proposed project. In the event that the licensee is unable to complete the replacement project, as referenced in RCW 70.38.115 (14), the building owner shall not be permitted to complete the project.

(4) The number of beds currently licensed at each affected facility and the number of licensed beds to be replaced at each affected facility;

(5) Geographic location of both the existing nursing home beds and the proposed replacement beds;

(6) Documentation that the nursing home beds being replaced will not be used for nursing home services once the replacement beds are licensed;

(7) A projected timeline for completion of the project; and

(8) Estimated capital expenditure. (This figure will be used by department of social and health services as part of the rate calculation.)

[Statutory Authority: Chapter 70.38 RCW. 98-17-099, § 246-310-397, filed 8/19/98, effective 9/19/98; 96-24-052, § 246-310-397, filed 11/27/96, effective 12/28/96.]

WAC 246-310-410 Swing bed review standards. (1) The department shall use the following rules, in addition to those under WAC 246-310-380 to interpret the certificate of need review criteria contained in WAC 246-310-210, 246-310-220, 246-310-230, and 246-310-240 for applications by hospitals proposing an increase in the number of designated swing beds.

(2) Swing beds are defined as up to the first five hospital beds, so designated by an eligible rural hospital, which are available to provide either acute care or long-term care nursing services as required.

(3) Hospitals proposing swing bed projects shall:

(a) Be located in geographic areas of the state defined by the United States Bureau of the Census as a nonstandardized metropolitan statistical area; and

(b) Have total licensed bed capacity not exceeding one hundred.

(4) Hospitals shall demonstrate ability to meet minimum medicare standards of care for rural hospital swing beds.

[Statutory Authority: Chapter 70.38 RCW. 96-24-052, § 246-310-410, filed 11/27/96, effective 12/28/96. Statutory Authority: RCW 70.38.135 and 70.38.919. 92-02-018 (Order 224), § 246-310-410, filed 12/23/91, effective 1/23/92. Statutory Authority: RCW 43.70.040. 91-02-049 (Order 121), recodified as § 246-310-410, filed 12/27/90, effective 1/31/91. Statutory Authority: RCW 70.38.919. 90-12-072 (Order 063), § 248-19-860, filed 6/1/90, effective 7/1/90.]

WAC 246-310-470 Review and action on health maintenance organization projects. (1) Undertakings requiring a certificate of need.

A certificate of need shall be required for any undertaking which, in accordance with WAC 246-310-020, is subject to the provisions of chapter 246-310 WAC, unless an exemption has been granted for such undertaking under the provisions of WAC 246-310-040.

(2) Required approval.

The secretary's designee shall issue a certificate of need for a proposed project if the certificate of need applicant for the proposed project is a health maintenance organization or a health care facility controlled (directly or indirectly) by a health maintenance organization and the department finds the proposed project meets the criteria set forth in WAC 246-310-210(5).

(3) Sale, acquisition, or lease of facilities or equipment for which a certificate of need has been issued.

A health care facility (or portion thereof) for which a certificate of need has been issued under the provisions of this section shall not be sold or leased and a controlling interest in such facility or in a lease of the facility shall not be acquired unless an exemption or a certificate of need for such sale, lease, or acquisition has been granted by the secretary's designee.

[Statutory Authority: Chapter 70.38 RCW. 96-24-052, § 246-310-470, filed 11/27/96, effective 12/28/96. Statutory Authority: RCW 70.38.135 and 70.38.919. 92-02-018 (Order 224), § 246-310-470, filed 12/23/91, effective 1/23/92. Statutory Authority: RCW 43.70.040. 91-02-049 (Order 121), recodified as § 246-310-470, filed 12/27/90, effective 1/31/91. Statutory Authority: RCW 70.38.135. 86-06-030 (Order 2344), § 248-19-410, filed 2/28/86; 81-09-012 (Order 210), § 248-19-410, filed 4/9/81, effective

5/20/81. Statutory Authority: Chapter 70.38 RCW. 79-12-079 (Order 188), § 248-19-410, filed 11/30/79.]

WAC 246-310-480 Projects proposed for the correction of deficiencies. (1) For the purposes of this section, "correction of deficiencies" shall mean one or more of the following:

(a) Eliminating or preventing imminent safety hazards as defined by federal, state, or local fire, building, or life safety codes or regulations; or

(b) Complying with state licensing standards; or

(c) Complying with accreditation or certification standards which must be met to receive reimbursement under Titles XVIII or XIX of the Social Security Act.

(2) An application submitted for a project limited to the correction of deficiencies, as defined in subsection (1) of this section, shall be approved unless the department finds that:

(a) The applicant was provided sufficient advanced notification of such deficiencies to allow for ongoing correction; or

(b) The project would result in the substantial modification or replacement of an existing health care facility and the licensee would not be exempt under WAC 246-310-044.

(3) An application submitted for the correction of deficiencies shall be reviewed under the expedited review process, in accordance with WAC 246-310-150, unless it qualifies for emergency review in accordance with WAC 246-310-140.

(4) An application reviewed under the provisions of this section shall be approved only to the extent the capital expenditure is needed for the correction of the deficiency.

(5) If the department finds any portion of the project or the project as a whole is not needed for the correction of deficiencies, such portion or entire project shall be reviewed in accordance with WAC 246-310-200, 246-310-210, 246-310-220, 246-310-230, and 246-310-240.

(6) If the department finds a proposed capital expenditure is needed to correct deficiencies, as defined in subsection (1) of this section, the criteria in WAC 246-310-210 shall not be applied to the consideration of the project.

[Statutory Authority: Chapter 70.38 RCW. 96-24-052, § 246-310-480, filed 11/27/96, effective 12/28/96. Statutory Authority: RCW 70.38.135 and 70.38.919. 92-02-018 (Order 224), § 246-310-480, filed 12/23/91, effective 1/23/92. Statutory Authority: RCW 43.70.040. 91-02-049 (Order 121), recodified as § 246-310-480, filed 12/27/90, effective 1/31/91. Statutory Authority: RCW 70.38.135. 86-06-030 (Order 2344), § 248-19-415, filed 2/28/86; 81-09-012 (Order 210), § 248-19-415, filed 4/9/81, effective 5/20/81.]

WAC 246-310-490 Written findings and actions on certificate of need applications. (1) Written findings.

(a) The findings of the department's review of a certificate of need application shall be stated in writing and include the basis for the decision of the secretary's designee as to whether a certificate of need is to be issued or denied for the proposed project.

(b) In making its findings and taking action on a certificate of need application, the department shall use all criteria contained in chapter 246-310 WAC applicable to the proposed project.

(i) The written findings shall identify any criterion the department has decided is not applicable to the particular project and give the reason for such decision.

(ii) The secretary's designee may deny a certificate of need if the applicant has not provided the information which is necessary to a determination that the project meets all applicable criteria and which the department has prescribed and published as necessary to a certificate of need review of the type proposed: Provided however, That the department has requested such information in a screening letter sent in accordance with WAC 246-310-090 (1)(c).

(c) The department shall make written findings on the extent to which the project meets the criteria set forth in WAC 246-310-210 (1) and (2) when the secretary's designee issues a certificate of need directly related to the provision of health services, or beds: Provided however, That no such written finding shall be necessary for projects for the correction of deficiencies of the types described in WAC 246-310-480 and for projects proposed by or on behalf of a health maintenance organization or a health care facility controlled, directly or indirectly, by a health maintenance organization.

(d) When, as a part of concurrent review proceedings, the secretary's designee makes a decision to approve an application or applications and to disapprove other competing applications, he or she shall provide a specific written statement of reasons for determining the approved application or applications to be superior.

(2) Separability of application and action.

When a certificate of need application is for multiple services or multiple components or the proposed project is to be multiphased, the secretary's designee may take individual and different action on separable portions of the proposed project.

(3) Conditional certificate of need.

(a) The secretary's designee in making his or her decision on a certificate of need application may decide to issue a conditional certificate of need if the department finds the project is justified only under specific circumstances: Provided however, That conditions shall relate directly to the project being reviewed and to review criteria.

(b) When the department finds a project for which a certificate of need is to be issued does not satisfy the review criteria set forth in WAC 246-310-210 (1) and (2), the secretary's designee may impose a condition or conditions that the applicant take affirmative steps so as to satisfy those review criteria. In evaluating the accessibility of the project, the current accessibility of the facility as a whole shall be taken into consideration.

(c) The conditions attached to a certificate of need may be released by the secretary's designee upon the request of the health care facility or health maintenance organization for which the certificate of need was issued.

(i) The request must include information needed by the department demonstrating the conditions are no longer valid and the release of such conditions would be consistent with the purpose of chapter 70.38 RCW.

(ii) A request for the removal of a condition must be submitted in accordance with WAC 246-310-090 and will be reviewed in accordance with the regular or expedited review procedures described in WAC 246-310-160 or 246-310-150.

(4) Distribution of written findings and statement of decision.

(a) A copy of the department's written findings and statement of the decision of the secretary's designee on a certificate of need application shall be sent to:

(i) The person submitting the certificate of need application;

(ii) In the case of a project proposed by a health maintenance organization, the appropriate regional office of the United States Department of Health and Human Services; and

(iii) When the secretary's designee issues a certificate of need for a project which does not satisfy the review criteria set forth in WAC 246-310-210 (1) and (2), the appropriate regional office of the Department of Health and Human Services.

(b) The written findings and statement of the decision of the secretary's designee on a certificate of need application shall be available to others requesting the certificate of need unit to provide access to a copy of such findings and statement.

[Statutory Authority: Chapter 70.38 RCW. 96-24-052, § 246-310-490, filed 11/27/96, effective 12/28/96. Statutory Authority: RCW 70.38.135 and 70.38.919. 92-02-018 (Order 224), § 246-310-490, filed 12/23/91, effective 1/23/92. Statutory Authority: RCW 43.70.040. 91-02-049 (Order 121), recodified as § 246-310-490, filed 12/27/90, effective 1/31/91. Statutory Authority: RCW 70.38.135. 86-06-030 (Order 2344), § 248-19-420, filed 2/28/86; 81-09-012 (Order 210), § 248-19-420, filed 4/9/81, effective 5/20/81. Statutory Authority: Chapter 70.38 RCW. 79-12-079 (Order 188), § 248-19-420, filed 11/30/79.]

WAC 246-310-500 Issuance, suspension, denial, revocation, and transfer of a certificate of need. (1) The secretary's designee shall issue a certificate of need to the applicant.

(a) The secretary's designee shall issue a certificate of need for:

(i) The proposed project, or

(ii) A separable portion of the proposed project.

(b) When the certificate of need is issued for a separable portion of the proposed project, the secretary's designee shall provide written notice to the applicant stating the reasons for the department's action.

(c) The secretary's designee shall issue a certificate of need only when the department finds that the project or the separable portion of the proposed project is consistent with the applicable criteria contained in chapter 246-310 WAC.

(d) In issuing a certificate of need, the secretary's designee shall:

(i) Specify the maximum capital expenditure which may be obligated under the certificate, and

(ii) Prescribe the cost components to be included in determining the capital expenditure which may be obligated under such certificate.

(2) The secretary's designee may issue a conditional certificate of need for a proposed project or a separable portion of the proposed project.

(a) The conditions attached to a certificate of need must directly relate to the project being reviewed.

(b) The conditions must directly relate to criteria contained in chapter 246-310 WAC.

(3) The department shall apply the following provisions when suspending a certificate of need.

(a) The secretary's designee may suspend a certificate of need for cause which shall include, but not be limited to:

(i) Suspicion of fraud,

(ii) Misrepresentation,

(iii) False statements,

(iv) Misleading statements,

(v) Evasion or suppression of material fact in the application for a certificate of need or any of its supporting materials.

(b) The secretary's designee shall issue an order which states the reason for any suspension of a certificate of need to the person to whom the certificate of need had been issued.

(c) A suspension of a certificate of need shall not exceed one hundred twenty calendar days.

(i) Prior to the expiration of the suspension the department shall:

(A) Review the facts and circumstances relevant to the suspension;

(B) Reinstate, amend, or revoke the certificate of need; and,

(ii) Send written notice of its decision on a suspended certificate of need to the person to whom the certificate of need had been issued.

(4) The secretary's designee shall send written notification of denial of a certificate of need to the applicant submitting the certificate of need application stating the reasons for the denial.

(5) When a proposed project or separable portion of the proposed project is denied a certificate of need, the department shall not accept another certificate of need application for the same project or separable portion unless the department determines:

(a) There is a substantial change in existing or proposed health facilities or services in the area to be served by the project; or

(b) There is a substantial change in the need for the facilities or services of the type proposed in the area to be served by the project; or

(c) One year has lapsed since the submission of the application for the certificate of need subject to regular review which was denied or the next scheduled concurrent review cycle permits the submission of applications.

(6) The department shall apply the following provisions in the revocation of a certificate of need.

(a) The secretary's designee may revoke a certificate of need for cause which shall include the following:

(i) Fraud,

(ii) Misrepresentation,

(iii) False statements,

(iv) Misleading statements, and

(v) Evasion or suppression of material facts in the application of a certificate of need, or in any of its supporting materials.

(b) When the secretary's designee revokes a certificate of need, the secretary's designee shall provide written notice of revocation to the person to whom the certificate of need was issued, including a statement of the reasons for such revocation.

(7) The department shall apply the following procedures in transferring or assigning a certificate of need.

(a) The department shall consider a request to transfer or assign a certificate of need valid only when:

(i) The person to whom the certificate of need was originally issued, or personal representative, where the holder is deceased, submits to the department a written request that the certificate of need be transferred to another person and gives the full name and complete address of the other person; and

(ii) The person to whom the current holder of the certificate of need wishes to transfer the certificate sends an application for such transfer on a form and in such a manner as prescribed and published by the department.

(b) The department shall review applications for transfer or assignment of a certificate of need according to the:

(i) Expedited review procedures in WAC 246-310-150; or

(ii) Regular review procedures in WAC 246-310-160.

(c) The secretary's designee shall base his or her decision to approve or deny an application to transfer or assign a certificate of need on:

(i) The demonstrated ability of the person wishing to acquire the certificate of need to undertake, complete, and operate the project in accordance with the following review criteria:

(A) WAC 246-310-220 (1) and (3), and

(B) WAC 246-310-230 (1), (3), and (5).

(ii) The continuing conformance of the project with all other applicable review criteria.

(d) When the person submitting an application to transfer or assign a certificate of need proposes to modify the project description or the maximum capital expenditure, the department shall inform in writing such person that a new or amended certificate of need is required.

(e) When the department denies an application for transfer or assignment of a certificate of need, the department shall inform in writing the person who submitted the application of the reasons for such denial.

(f) The department shall not transfer or assign any certificate of need issued after February 1, 1988, except when:

(i) Prior to completion of the project, death or divorce of one or more persons holding a certificate renders it impossible or impractical to complete the project in the absence of a transfer or assignment; or

(ii) After commencement, a substantial portion of the project has been completed by the original holder of the certificate.

(g) The department shall not transfer or assign a certificate of need under subsection (7)(f)(i) and (ii) of this section when the authorized project is to be relocated.

(h) When the department transfers a certificate of need for a project which has not been commenced, the transferred certificate of need shall have a validity period of two years from the date of issue with the provision for one six-month extension if the holder can demonstrate to the satisfaction of the secretary's designee that substantial and continuing progress towards commencement has been made.

[Statutory Authority: Chapter 70.38 RCW. 96-24-052, § 246-310-500, filed 11/27/96, effective 12/28/96. Statutory Authority: RCW 70.38.135. 91-05-093 (Order 143), § 246-310-500, filed 2/20/91, effective 3/23/91. Statutory Authority: RCW 43.70.040. 91-02-049 (Order 121), recodified as § 246-310-500, filed 12/27/90, effective 1/31/91. Statutory Authority: RCW 70.38.115. 89-02-040 (Order 2745), § 248-19-440, filed 12/30/88. Statutory Authority: RCW 70.38.135. 86-06-030 (Order 2344), § 248-19-440, filed 2/28/86; 81-09-012 (Order 210), § 248-19-440, filed 4/9/81, effective 5/20/81. Statutory Authority: Chapter 70.38 RCW. 79-12-079 (Order 188), § 248-19-440, filed 11/30/79.]

WAC 246-310-560 Provision for reconsideration decision. (1) Any interested or affected person may, for good cause shown, request a public hearing for the purpose of reconsideration of the decision of the secretary's designee on a certificate of need application or withdrawal of a certificate of need.[1]

(2) The department shall conduct a reconsideration hearing if it finds the request is in accord with the following requirements:

(a) The request for a reconsideration hearing shall be written, be received by the department within twenty-eight days of the department's decision on the certificate of need application or withdrawal of the certificate of need, state in detail the grounds which the person requesting the hearing believes to show good cause, and be signed by the person making the request.

(b) Grounds which the department may deem to show good cause for a reconsideration hearing shall include but not be limited to the following:

(i) Significant relevant information not previously considered by the department which, with reasonable diligence, could not have been presented before the department made its decision;

(ii) Information on significant changes in factors or circumstances relied upon by the department in making its findings and decision; or

(iii) Evidence the department materially failed to follow adopted procedures in reaching a decision.

(3) Scheduling of a reconsideration hearing shall occur within thirty days after receipt of an approved request for a hearing.

(4) Notification of a public reconsideration hearing on a certificate of need application or withdrawal of a certificate of need shall be sent prior to the date of such hearing by the department to the following:

(a) The person requesting the reconsideration hearing;

(b) The person submitting the certificate of need application which is under reconsideration or the holder of the certificate of need;

(c) Health care facilities and health maintenance organizations located in the health service area where the project is proposed to be located providing services similar to the services under review;

(d) In the case of a concurrent review, other applicants competing as described in WAC 246-310-080; and to

(e) Other persons requesting the department to send them such notification.

(5) The department shall, within forty-five days after the conclusion of a reconsideration hearing, make written findings stating the basis of the decision made after such hearing.

(6) The secretary's designee may, upon the basis of the department's findings on a reconsideration hearing, issue or reissue, amend, revoke, or withdraw a certificate of need or impose or modify conditions on a certificate of need for the project about which the reconsideration hearing was conducted.

(7) An applicant requesting a reconsideration hearing under the provisions of this section does not forfeit his or her rights to an adjudicative appeal under the provisions of WAC 246-310-610.

Note: [1]No fee will be charged for a reconsideration hearing.

[Statutory Authority: Chapter 70.38 RCW. 98-10-053, § 246-310-560, filed 4/29/98, effective 5/30/98; 96-24-052, § 246-310-560, filed 11/27/96, effective 12/28/96. Statutory Authority: RCW 70.38.135 and 70.38.919. 92-02-018 (Order 224), § 246-310-560, filed 12/23/91, effective 1/23/92. Statutory Authority: RCW 43.70.040. 91-02-049 (Order 121), recodified as § 246-310-560, filed 12/27/90, effective 1/31/91. Statutory Authority: RCW 70.38.135. 86-06-030 (Order 2344), § 248-19-430, filed 2/28/86; 81-09-012 (Order 210), § 248-19-430, filed 4/9/81, effective 5/20/81. Statutory Authority: Chapter 70.38 RCW. 79-12-079 (Order 188), § 248-19-430, filed 11/30/79.]

WAC 246-310-570 Circumstances for which an amended certificate of need is required. (1) An amended certificate of need shall be required for any of the following modifications of a project for which a certificate of need was issued and has been submitted in accordance with subsection (2) of this section:

(a) An addition of a new service;

(b) An expansion of a service beyond that which was included in the certificate of need application on which the issuance of the certificate of need was based;

(c) An increase in the inpatient bed capacity;

(d) The modification or release of a condition placed on a certificate of need;

(e) A significant reduction in the scope of a project for which a certificate of need has been issued without a commensurate reduction in the cost of the project, or the project cost increases (as represented in bids on a construction project or final cost estimate or estimates acceptable to the person to whom the certificate of need was issued) when the total of such increases exceeds twelve percent or fifty thousand dollars, whichever is greater, over the maximum capital expenditure specified by the secretary's designee in issuing the certificate of need: Provided however, That the review of such reductions or cost increases shall be restricted to the continued conformance of the project with the criteria contained in WAC 246-310-220 and 246-310-240; or

(f) A change in the approved site.

(2) An application to amend a certificate of need shall be submitted and the certificate of need will be issued or denied prior to project completion except for projects involving construction. For projects involving construction, an amendment application may be submitted up to ninety days after project completion provided the applicant meets the following eligibility requirements:

(a) Eligibility requirements for a ninety-day extension to submit an application to amend a certificate of need.

(i) The applicant has submitted quarterly reports and updated the capital expenditures as required in WAC 246-310-590;

(ii) The quarterly progress reports identified that the actual construction costs had exceeded twelve percent or fifty thousand dollars (whichever is greater) of the approved capital expenditure; and

(iii) The department did not notify the applicant in writing that an amended certificate of need was needed.

(b) In the event the applicant has submitted quarterly progress reports as identified in (a)(i) of this subsection and the reports did not reflect that the actual construction costs had exceeded the approved capital expenditure, the applicant would only be eligible for a ninety-day extension if the applicant can document:

(i) All costs in excess of twelve percent or fifty thousand dollars (whichever is greater) of the approved capital expenditure were totally unforeseen as documented by a signed affidavit from the contractor; and

(ii) That all the excess costs were incurred after the submission of the last quarterly progress report preceding the projects' completion.

(3) An application for an amended certificate of need shall be submitted in accordance with the provisions of WAC 246-310-090.

(4) An application for an amended certificate of need may be reviewed under the expedited review process set forth in WAC 246-310-150.

(5) The department shall provide a written determination as to the requirement for an amended certificate of need within twenty-one days after receipt of a request for such determination.

[Statutory Authority: Chapter 70.38 RCW. 96-24-052, § 246-310-570, filed 11/27/96, effective 12/28/96. Statutory Authority: RCW 70.38.135 and 70.38.919. 92-02-018 (Order 224), § 246-310-570, filed 12/23/91, effective 1/23/92. Statutory Authority: RCW 43.70.040. 91-02-049 (Order 121), recodified as § 246-310-570, filed 12/27/90, effective 1/31/91. Statutory Authority: RCW 70.38.135. 86-06-030 (Order 2344), § 248-19-450, filed 2/28/86; 81-09-012 (Order 210), § 248-19-450, filed 4/9/81, effective 5/20/81. Statutory Authority: Chapter 70.38 RCW. 79-12-079 (Order 188), § 248-19-450, filed 11/30/79.]

WAC 246-310-580 Validity and extensions. (1) A certificate of need shall be valid for two years: Provided, That one six-month extension may be made if the certificate holder can demonstrate that substantial and continuing progress toward commencement of the project has been made.

(2) In the case of a project involving construction, substantial and continuing progress shall include one of the following:

(a) When review and approval by the department of the final plans for construction is required, the submission of working drawings;

(b) When plan approval is not required by the department, receipt of copies of the working drawings for construction; or

(c) In the event working drawings have not been submitted, the applicant must demonstrate that he or she has made continuous progress toward commencement of the project.

(3) A project for which a certificate of need has been issued shall be commenced during the validity period for the certificate of need.

(4) Applications for extensions of the validity period of certificates of need shall be submitted to the department at least one hundred twenty calendar days before the expiration of the certificate of need, and shall contain such information as may be required by the department to determine the extent of progress toward commencement of construction or other action necessary to a project.

(5) An application for an extension of a certificate of need submitted less than one hundred twenty calendar days before the expiration of the certificate of need shall not be reviewed, unless the applicant can demonstrate to the satisfaction of the department unforeseen occurrences during the last one hundred twenty days of the validity period of the certificate of need prevented commencement of construction as previously anticipated by the applicant.

(6) Commencement of the project shall not be undertaken after the expiration of the certificate of need unless a new certificate of need application has been reviewed and a new certificate of need has been issued by the secretary's designee.

(7)(a) In the case of a request by a nursing home to extend its conversion rights to beds banked under the provisions of RCW 70.38.111(8) for an additional four years, the nursing home must meet the following requirements:

(i) The request shall be made a minimum ninety days prior to the end of the four-year validity period of the original bed banking request.

(ii) The nursing home shall demonstrate it has complied with the applicable notification requirements under WAC 246-310-395;

(iii) The nursing home has and is currently meeting the exemption requirements in WAC 246-310-043; and

(iv) The nursing home has implemented the alternative service or services identified in the bed banking request. If the service or services have not been implemented, an explanation of why such services have not been implemented and rationale for why the department should grant its extension request.

(b) The department shall notify the nursing home within thirty days of the extension request as to whether an extension of the nursing home's conversion rights is recognized. The nursing home does not forfeit its right to extend its conversion rights under this section if the department does not respond within this time frame, nor does the nursing home obtain rights that it otherwise would not have under applicable statutes or rules if the department does not respond within the time frame.

[Statutory Authority: Chapter 70.38 RCW. 96-24-052, § 246-310-580, filed 11/27/96, effective 12/28/96. Statutory Authority: RCW 43.70.040. 91-02-049 (Order 121), recodified as § 246-310-580, filed 12/27/90, effective 1/31/91. Statutory Authority: RCW 70.38.135. 86-06-030 (Order 2344), § 248-19-460, filed 2/28/86. Statutory Authority: Chapter 70.38 RCW. 79-12-079 (Order 188), § 248-19-460, filed 11/30/79.]

WAC 246-310-590 Monitoring of approved projects. (1) The department shall monitor the costs and components of approved projects to assure conformance with certificates of need that have been issued.

(2) The department shall require periodic progress reports from those applicants to whom certificates of need have been issued.

(a) Progress reports shall be required quarterly.

(b) Progress reports shall be submitted in the form and manner prescribed and published by the department.

(3) Information required on approved projects may include:

(a) Actual project costs;

(b) Changes in the project;

(c) Financing arrangements, different than approved under the certificate of need;

(d) Project commencement date;

(e) Progress toward completion of construction; and

(f) Project completion date.

(4) The information required on approved projects may vary according to the nature of the projects.

(5) Progress reports on a project for which a particular certificate of need has been issued shall terminate when the project has been completed and the department finds it has received all the information necessary to determine the project has been completed in accordance with the certificate of need which had been issued and the provisions of chapter 246-310 WAC.

[Statutory Authority: Chapter 70.38 RCW. 96-24-052, § 246-310-590, filed 11/27/96, effective 12/28/96. Statutory Authority: RCW 70.38.135 and 70.38.919. 92-02-018 (Order 224), § 246-310-590, filed 12/23/91, effective 1/23/92. Statutory Authority: RCW 43.70.040. 91-02-049 (Order 121), recodified as § 246-310-590, filed 12/27/90, effective 1/31/91. Statutory Authority: RCW 70.38.135. 86-06-030 (Order 2344), § 248-19-470, filed 2/28/86. Statutory Authority: Chapter 70.38 RCW. 79-12-079 (Order 188), § 248-19-470, filed 11/30/79.]

WAC 246-310-600 Withdrawal of a certificate of need. (1) The secretary's designee may withdraw a certificate of need if the department determines that the holder of a certificate is not meeting the timetable specified in the certificate of need application for completing the project and is not making a good-faith effort to meet such timetable.

(2) In reviewing a proposed withdrawal of a certificate of need, the department shall adhere to the provisions of WAC 246-310-170, 246-310-180, 246-310-190, and 246-310-560.

(3) The review period for a proposed withdrawal of a certificate of need shall not exceed ninety days unless extended by the department to allow sufficient time for the conduct of a public hearing pursuant to the provisions of WAC 246-310-180. Such extension shall not exceed thirty days.

(4) The findings of the department's review of a proposed withdrawal of a certificate of need shall be stated in writing and include the basis for the decision of the secretary's designee as to whether the certificate of need is to be withdrawn for a proposed project. A copy of the department's written findings and statement of the decision of the secretary's designee on the proposed withdrawal of a certificate of need shall be sent to:

(a) The holder of the certificate of need;

(b) In the case of a project proposed by a health maintenance organization, the appropriate regional office of the United States Department of Health and Human Services.

(5) The written findings and statement of the decision of the secretary's designee on the proposed withdrawal of a certificate of need shall be available to others requesting the certificate of need unit to provide access to a copy of such findings and statement.

(6) When a certificate of need is for multiple services or multiple components or the proposed project is to be multiphased, the secretary's designee may take individual and different action regarding withdrawal of the certificate of need on separable portions of the certificate of need.

[Statutory Authority: Chapter 70.38 RCW. 96-24-052, § 246-310-600, filed 11/27/96, effective 12/28/96. Statutory Authority: RCW 70.38.135 and

70.38.919. 92-02-018 (Order 224), § 246-310-600, filed 12/23/91, effective 1/23/92. Statutory Authority: RCW 43.70.040. 91-02-049 (Order 121), recodified as § 246-310-600, filed 12/27/90, effective 1/31/91. Statutory Authority: RCW 70.38.135. 86-06-030 (Order 2344), § 248-19-475, filed 2/28/86; 81-09-012 (Order 210), § 248-19-475, filed 4/9/81, effective 5/20/81.]

WAC 246-310-610 Adjudicative proceeding. (1) An applicant denied a certificate of need or a certificate holder whose certificate was suspended or revoked has the right to an adjudicative proceeding.

(2) A certificate applicant or holder contesting a department certificate decision shall within twenty-eight days of receipt of the department's decision or reconsidered decision:

(a) File a written application for an adjudicative proceeding by a method showing proof of receipt with the Adjudicative Clerk Office, Department of Health, 2413 Pacific Avenue, P.O. Box 47879, Olympia, WA 98504-7879; and

(b) Include in or with the application:

(i) A specific statement of the issue or issues and law involved;

(ii) The grounds for contesting the department decision; and

(iii) A copy of the contested department decision.

(3) The proceeding is governed by the Administrative Procedure Act (chapter 34.05 RCW), this chapter, and chapter 246-08 WAC. If a provision in this chapter conflicts with chapter 246-08 WAC, the provision in this chapter governs.

(4) Any health care facility or health maintenance organization that:

(a) Provides services similar to the services provided by the applicant and under review pursuant to this subsection;

(b) Is located within the applicant's health service area; and

(c) Testified or submitted evidence at a public hearing held pursuant to RCW 70.38.115(9), shall be provided an opportunity to present oral or written testimony and argument in a proceeding under RCW 70.38.115 (10)(a) provided that the health care facility or health maintenance organization had, in writing, requested to be informed of the department's decision. If the department desires to settle with the applicant prior to the conclusion of the adjudicative proceeding, the department shall so inform the health care facility or health maintenance organization and afford them the opportunity to comment, in advance, on the proposed settlement.

[Statutory Authority: Chapter 70.38 RCW. 98-10-053, § 246-310-610, filed 4/29/98, effective 5/30/98; 96-24-052, § 246-310-610, filed 11/27/96, effective 12/28/96. Statutory Authority: RCW 70.38.135 and 70.38.919. 92-02-018 (Order 224), § 246-310-610, filed 12/23/91, effective 1/23/92. Statutory Authority: RCW 43.70.040. 91-02-049 (Order 121), recodified as § 246-310-610, filed 12/27/90, effective 1/31/91. Statutory Authority: Chapter 34.05 RCW, RCW 34.05.220 (1)(a), 70.38.135 and 1989 1st ex.s. c 9 § 607. 90-06-019 (Order 039), § 248-19-480, filed 2/28/90, effective 3/1/90. Statutory Authority: RCW 70.38.135. 86-06-030 (Order 2344), § 248-19-480, filed 2/28/86; 82-19-055 (Order 244), § 248-19-480, filed 9/15/82; 81-09-012 (Order 210), § 248-19-480, filed 4/9/81, effective 5/20/81. Statutory Authority: Chapter 70.38 RCW. 79-12-079 (Order 188), § 248-19-480, filed 11/30/79.]

WAC 246-310-700 Adult elective percutaneous coronary interventions (PCI) without on-site cardiac surgery. Purpose and applicability of chapter. Adult elective percutaneous coronary interventions are tertiary services as listed in WAC 246-310-020. To be granted a certificate of need, an adult elective PCI program must meet the standards in this section and WAC 246-310-715, 246-310-720, 246-310-725, 246-310-730, 246-310-735, 246-310-740, and 246-310-745 in addition to applicable review criteria in WAC 246-310-210, 246-310-220, 246-310-230, and 246-310-240. This chapter is adopted by the Washington state department of health to implement chapter 70.38 RCW and establish minimum requirements for obtaining a certificate of need and operating an elective PCI program.

[Statutory Authority: RCW 70.38.128. 09-01-113, § 246-310-700, filed 12/19/08, effective 12/19/08.]

WAC 246-310-705 PCI definitions. For the purposes of this chapter and chapter 70.38 RCW, the words and phrases below will have the following meanings unless the context clearly indicates otherwise:

(1) "Concurrent review" means the process by which applications competing to provide services in the same planning area are reviewed simultaneously by the department. The department compares the applications to one another and these rules.

(2) "Elective" means a PCI performed on a patient with cardiac function that has been stable in the days or weeks prior to the operation. Elective cases are usually scheduled at least one day prior to the surgical procedure.

(3) "Emergent" means a patient needs immediate PCI because, in the treating physician's best clinical judgment, delay would result in undue harm or risk to the patient.

(4) "Percutaneous coronary interventions (PCI)" means invasive but nonsurgical mechanical procedures and devices that are used by cardiologists for the revascularization of obstructed coronary arteries. These interventions include, but are not limited to:

(a) Bare and drug-eluting stent implantation;

(b) Percutaneous transluminal coronary angioplasty (PTCA);

(c) Cutting balloon atherectomy;

(d) Rotational atherectomy;

(e) Directional atherectomy;

(f) Excimer laser angioplasty;

(g) Extractional thrombectomy.

(5) "PCI planning area" means an individual geographic area designated by the department for which adult elective PCI program need projections are calculated. For purposes of adult elective PCI projections, planning area and service area have the same meaning. The following table establishes PCI planning areas for Washington state:

Planning Areas: Planning areas that utilize zip codes will be administratively updated upon a change by the United States Post Office, and are available upon request.	
1.	Adams, Ferry, Grant, Lincoln, Pend Oreille, Spokane, Stevens, Whitman, Asotin
2.	Benton, Columbia, Franklin, Garfield, Walla Walla
3.	Chelan, Douglas, Okanogan
4.	Kittitas, Yakima, Klickitat East (98620, 99356, 99322)
5.	Clark, Cowlitz, Skamania, Wahkiakum, Klickitat West (98650, 98619, 98672, 98602, 98628, 98635, 98617, 98613)

Planning Areas: Planning areas that utilize zip codes will be administratively updated upon a change by the United States Post Office, and are available upon request.	
6.	Grays Harbor, Lewis, Mason, Pacific, Thurston
7.	Pierce East (98304, 98321, 98323, 98328, 98330, 98338, 98360, 98371, 98372, 98373, 98374, 98375, 98387, 98390, 98391, 98443, 98445, 98446, 98580)
8.	Pierce West (98303, 98327, 98329, 98332, 98333, 98335, 98349, 98351, 98354, 98388, 98394, 98402, 98403, 98404, 98405, 98406, 98407, 98408, 98409, 98416, 98418, 98421, 98422, 98424, 98430, 98433, 98438, 98439, 98444, 98447, 98465, 98466, 98467, 98498, 98499)
9.	King East (98001, 98002, 98003, 98004, 98005, 98006, 98007, 98008, 98010, 98011, 98014, 98019, 98022, 98023, 98024, 98027, 98028, 98029, 98030, 98031, 98032, 98033, 98034, 98038, 98039, 98042, 98045, 98047, 98051, 98052, 98053, 98055, 98056, 98057, 98058, 98059, 98065, 98072, 98074, 98075, 98077, 98092, 98224, 98288)
10.	King West (98040, 98070, 98101, 98102, 98103, 98104, 98105, 98106, 98107, 98108, 98109, 98112, 98115, 98116, 98117, 98118, 98119, 98121, 98122, 98125, 98126, 98133, 98134, 98136, 98144, 98146, 98148, 98155, 98158, 98166, 98168, 98177, 98178, 98188, 98195, 98198, 98199)
11.	Snohomish
12.	Skagit, San Juan, Island
13.	Kitsap, Jefferson, Clallam
14.	Whatcom

[Statutory Authority: RCW 70.38.128. 09-01-113, § 246-310-705, filed 12/19/08, effective 12/19/08.]

WAC 246-310-710 Concurrent review. The department shall review new adult elective percutaneous coronary intervention (PCI) services using the concurrent review cycle according to the following table:

Concurrent Review Cycle:

Application Submission Period	Letters of Intent Due	First working day through last working day of January of each year.	
	Receipt of Initial Application	First working day through last working day of February of each year.	
	End of Screening Period	Last working day of March of each year.	
	Applicant Response	Last working day of April of each year.	
Department Action	Beginning of Review Preparation	May 1 through May 15	
Application Review Period	Public Comment Period (includes public hearing if requested)	60-Day Public Comment Period	Begins May 16 of each year or the first working day after May 16.
	Rebuttal Period	30-Day Rebuttal period	Applicant and affected party response to public comment.
	Ex parte Period	45-Day Ex parte period	Department evaluation and decision.

(1) If the department is unable to meet the deadline for making a decision on the application, it will notify applicants fifteen days prior to the scheduled decision date. In that event, the department will establish a new decision date.

(2) The department may not accept new applications for a planning area if there are any pending applications in that planning area filed under a previous concurrent review cycle, or applications submitted prior to the effective date of these rules that affect any of the new planning areas, unless the department has not made a decision on the pending applications within the review timelines of nine months for a concurrent review and six months for a regular review.

(3) If the department determines that an application does not compete with another application, it may convert the review of an application that was initially submitted under a concurrent review cycle to a regular review process.

[Statutory Authority: RCW 70.38.128. 09-01-113, § 246-310-710, filed 12/19/08, effective 12/19/08.]

WAC 246-310-715 General requirements. The applicant hospital must:

(1) Submit a detailed analysis of the impact that their new adult elective PCI services will have on the Cardiovascular Disease and Interventional Cardiology Fellowship Training programs at the University of Washington, and allow the university an opportunity to respond. New programs may not reduce current volumes at the University of Washington fellowship training program.

(2) Submit a detailed analysis of the projected volume of adult elective PCIs that it anticipates it will perform in years one, two and three after it begins operations. All new elective PCI programs must comply with the state of Washington annual PCI volume standards (three hundred) by the end of year three. The projected volumes must be sufficient to assure that all physicians working only at the applicant hospital will be able to meet volume standards of seventy-five PCIs per year. If an applicant hospital fails to meet annual volume standards, the department may conduct a review of certificate of need approval for the program under WAC 246-310-755.

(3) Submit a plan detailing how they will effectively recruit and staff the new program with qualified nurses, catheterization laboratory technicians, and interventional cardiologists without negatively affecting existing staffing at PCI programs in the same planning area.

(4) Maintain one catheterization lab used primarily for cardiology. The lab must be a fully equipped cardiac catheterization laboratory with all appropriate devices, optimal digital imaging systems, life sustaining apparati, intra-aortic balloon pump assist device (IABP). The lab must be staffed by qualified, experienced nursing and technical staff with documented competencies in the treatment of acutely ill patients.

(5) Be prepared and staffed to perform emergent PCIs twenty-four hours per day, seven days per week in addition to the scheduled PCIs.

(6) If an existing CON approved heart surgery program relinquishes the CON for heart surgery, the facility must apply for an amended CON to continue elective PCI services. The applicant must demonstrate ability to meet the elective PCI standards in this chapter.

[Statutory Authority: RCW 70.38.128. 09-01-113, § 246-310-715, filed 12/19/08, effective 12/19/08.]

WAC 246-310-720 Hospital volume standards. (1) Hospitals with an elective PCI program must perform a minimum of three hundred adult PCIs per year by the end of the third year of operation and each year thereafter.

(2) The department shall only grant a certificate of need to new programs within the identified planning area if:

(a) The state need forecasting methodology projects unmet volumes sufficient to establish one or more programs within a planning area; and

(b) All existing PCI programs in that planning area are meeting or exceeding the minimum volume standard.

[Statutory Authority: RCW 70.38.128. 09-01-113, § 246-310-720, filed 12/19/08, effective 12/19/08.]

WAC 246-310-725 Physician volume standards. Physicians performing adult elective PCI procedures at the applying hospital must perform a minimum of seventy-five PCIs per year. Applicant hospitals must provide documentation that physicians performed seventy-five PCI procedures per year for the previous three years prior to the applicant's CON request.

[Statutory Authority: RCW 70.38.128. 09-01-113, § 246-310-725, filed 12/19/08, effective 12/19/08.]

WAC 246-310-730 Staffing requirements. The applicant hospital must:

(1) Employ a sufficient number of properly credentialed physicians so that both emergent and elective PCIs can be performed.

(2) Staff its catheterization laboratory with a qualified, trained team of technicians experienced in interventional lab procedures.

(a) Nursing staff should have coronary care unit experience and have demonstrated competency in operating PCI related technologies.

(b) Staff should be capable of endotracheal intubation and ventilator management both on-site and during transfer if necessary.

[Statutory Authority: RCW 70.38.128. 09-01-113, § 246-310-730, filed 12/19/08, effective 12/19/08.]

WAC 246-310-735 Partnering agreements. The applicant hospital must have a signed written agreement with a hospital providing on-site cardiac surgery. This agreement must include, at minimum, provisions for:

(1) Coordination between the nonsurgical hospital and surgical hospital's availability of surgical teams and operating rooms. The hospital with on-site surgical services is not required to maintain an available surgical suite twenty-four hours, seven days a week.

(2) Assurance the backup surgical hospital can provide cardiac surgery during all hours that elective PCIs are being performed at the applicant hospital.

(3) Transfer of all clinical data, including images and videos, with the patient to the backup surgical hospital.

(4) Communication by the physician(s) performing the elective PCI to the backup hospital cardiac surgeon(s) about the clinical reasons for urgent transfer and the patient's clinical condition.

(5) Acceptance of all referred patients by the backup surgical hospital.

(6) The applicant hospital's mode of emergency transport for patients requiring urgent transfer. The hospital must have a signed transportation agreement with a vendor who will expeditiously transport by air or land all patients who experience complications during elective PCIs that require transfer to a backup hospital with on-site cardiac surgery.

(7) Emergency transportation beginning within twenty minutes of the initial identification of a complication.

(8) Evidence that the emergency transport staff are certified. These staff must be advanced cardiac life support (ACLS) certified and have the skills, experience, and equipment to monitor and treat the patient en route and to manage an intra-aortic balloon pump (IABP).

(9) The hospital documenting the transportation time from the decision to transfer the patient with an elective PCI complication to arrival in the operating room of the backup hospital. Transportation time must be less than one hundred twenty minutes.

(10) At least two annual timed emergency transportation drills with outcomes reported to the hospital's quality assurance program.

(11) Patient signed informed consent for adult elective (and emergent) PCIs. Consent forms must explicitly communicate to the patients that the intervention is being performed without on-site surgery backup and address risks related to transfer, the risk of urgent surgery, and the established emergency transfer agreements.

(l2) Conferences between representatives from the heart surgery program(s) and the elective coronary intervention program. These conferences must be held at least quarterly, in which a significant number of preoperative and post-operative cases are reviewed, including all transport cases.

(13) Addressing peak volume periods (such as joint agreements with other programs, the capacity to temporarily increase staffing, etc.).

[Statutory Authority: RCW 70.38.128. 09-01-113, § 246-310-735, filed 12/19/08, effective 12/19/08.]

WAC 246-310-740 Quality assurance. The applicant hospital must submit a written quality assurance/quality improvement plan specific to the elective PCI program as part of its application. At minimum, the plan must include:

(1) A process for ongoing review of the outcomes of adult elective PCIs. Outcomes must be benchmarked against state or national quality of care indicators for elective PCIs.

(2) A system for patient selection that results in outcomes that are equal to or better than the benchmark standards in the applicant's plan.

(3) A process for formalized case reviews with partnering surgical backup hospital(s) of preoperative and post-operative elective PCI cases, including all transferred cases.

(4) A description of the hospital's cardiac catheterization laboratory and elective PCI quality assurance reporting processes for information requested by the department or the department's designee. The department of health does not intend to require duplicative reporting of information.

[Statutory Authority: RCW 70.38.128. 09-01-113, § 246-310-740, filed 12/19/08, effective 12/19/08.]

WAC 246-310-745 Need forecasting methodology. For the purposes of the need forecasting method in this section, the following terms have the following specific meanings:

(1) "Base year" means the most recent calendar year for which December 31 data is available as of the first day of the application submission period from the department's CHARS reports or successor reports.

(2) "Current capacity" means the sum of all PCIs performed on people (aged fifteen years of age and older) by all CON approved adult elective PCI programs, or department grandfathered programs within the planning area. To determine the current capacity for those planning areas where a new program has operated less than three years, the department will measure the volume of that hospital as the greater of:

(a) The actual volume; or

(b) The minimum volume standard for an elective PCI program established in WAC 246-310-720.

(3) "Forecast year" means the fifth year after the base year.

(4) "Percutaneous coronary interventions" means cases as defined by diagnosis related groups (DRGs) as developed under the Centers for Medicare and Medicaid Services (CMS) contract that describe catheter-based interventions involving the coronary arteries and great arteries of the chest. The department will exclude all pediatric catheter-based therapeutic and diagnostic interventions performed on persons fourteen years of age and younger are excluded. The department will update the list of DRGs administratively to reflect future revisions made by CMS to the DRG to be considered in certificate of need definitions, analyses, and decisions. The DRGs for calendar year 2008 applications will be DRGs reported in 2007, which include DRGs 518, 555, 556, 557 and 558.

(5) "Use rate" or "PCI use rate," equals the number of PCIs performed on the residents of a planning area (aged fifteen years of age and older), per one thousand persons.

(6) "Grandfathered programs" means those hospitals operating a certificate of need approved interventional cardiac catheterization program or heart surgery program prior to the effective date of these rules, that continue to operate a heart surgery program. For hospitals with jointly operated programs, only the hospital where the program's procedures were approved to be performed may be grandfathered.

(7) The data sources for adult elective PCI case volumes include:

(a) The CHARS data from the department, office of hospital and patient data;

(b) The department's office of certificate of need survey data as compiled, by planning area, from hospital providers of PCIs to state residents (including patient origin information, i.e., patients' zip codes and a delineation of whether the PCI was performed on an inpatient or outpatient basis); and

(c) Clinical outcomes assessment program (COAP) data from the foundation for health care quality, as provided by the department.

(8) The data source for population estimates and forecasts is the office of financial management medium growth series population trend reports or if not available for the planning area, other population data published by well-recognized demographic firms.

(9) The data used for evaluating applications submitted during the concurrent review cycle must be the most recent year end data as reported by CHARS or the most recent survey data available through the department or COAP data for the appropriate application year. The forecasts for demand and supply will be for five years following the base year. The base year is the latest year that full calendar year data is available from CHARS. In recognition that CHARS does not currently provide outpatient volume statistics but is patient origin-specific and COAP does provide outpatient PCI case volumes by hospitals but is not currently patient origin-specific, the department will make available PCI statistics from its hospital survey data, as necessary, to bridge the current outpatient patient origin-specific data shortfall with CHARS and COAP.

(10) Numeric methodology:

Step 1. Compute each planning area's PCI use rate calculated for persons fifteen years of age and older, including inpatient and outpatient PCI case counts.

(a) Take the total planning area's base year population residents fifteen years of age and older and divide by one thousand.

(b) Divide the total number of PCIs performed on the planning area residents over fifteen years of age by the result of Step 1 (a). This number represents the base year PCI use rate per thousand.

Step 2. Forecasting the demand for PCIs to be performed on the residents of the planning area.

(a) Take the planning area's use rate calculated in Step 1 (b) and multiply by the planning area's corresponding forecast year population of residents over fifteen years of age.

Step 3. Compute the planning area's current capacity.

(a) Identify all inpatient procedures at CON approved hospitals within the planning area using CHARS data;

(b) Identify all outpatient procedures at CON approved hospitals within the planning area using department survey data; or

(c) Calculate the difference between total PCI procedures by CON approved hospitals within the planning area reported to COAP and CHARS. The difference represents outpatient procedures.

(d) Sum the results of (a) and (b) or sum the results of (a) and (c). This total is the planning area's current capacity which is assumed to remain constant over the forecast period.

Step 4. Calculate the net need for additional adult elective PCI procedures by subtracting the calculated capacity in Step 3 from the forecasted demand in Step 2. If the net need for procedures is less than three hundred, the department will not approve a new program.

Step 5. If Step 4 is greater than three hundred, calculate the need for additional programs.

(a) Divide the number of projected procedures from Step 4 by three hundred.

(b) Round the results down to identify the number of needed programs. (For example: 575/300 = 1.916 or 1 program)

[Statutory Authority: RCW 70.38.128. 09-01-113, § 246-310-745, filed 12/19/08, effective 12/19/08.]

WAC 246-310-750 Tiebreaker. If two or more applicant hospitals are competing to meet the same forecasted net need, the department shall consider which facility's location provides the most improvement in geographic access. Geographic access means the facility that is located the farthest in statue miles from an existing facility authorized to provide PCI procedures.

[Statutory Authority: RCW 70.38.128. 09-01-113, § 246-310-750, filed 12/19/08, effective 12/19/08.]

WAC 246-310-755 Ongoing compliance with standards. If the department issues a certificate of need (CON), it will be conditioned to require ongoing compliance with the CON standards. Failure to meet the standards may be grounds for revocation or suspension of a hospital's CON, or other appropriate licensing or certification actions.

(1) Hospitals granted a certificate of need must meet:

(a) The program procedure volume standards within three years from the date of initiating the program; and

(b) QA standards in WAC 246-310-740.

(2) The department may reevaluate these standards every three years.

[Statutory Authority: RCW 70.38.128. 09-01-113, § 246-310-755, filed 12/19/08, effective 12/19/08.]

WAC 246-310-900 Capital expenditure minimum adjustment procedures. These rules and regulations are adopted pursuant to RCW 70.38.025 (6) and (12) for the purpose of establishing the index to be used and procedures for making adjustments to the "expenditure minimum" for capital expenditures which are subject to the requirements of the certificate of need program established under the provisions of chapter 70.38 RCW.

(1) Index to be used. For the purposes of the certificate of need program, the United States Department of Commerce Composite Construction Cost Index shall be used in the annual adjustments of the following:

The "expenditure minimum" as this term is defined in RCW 70.38.025 and WAC 246-310-010.

(2) Procedure for adjustment.

(a) On or before the first day of each January, the department shall adjust and publish the adjusted expenditure minimum for capital expenditures. Such adjusted minimums shall be in effect during the entire calendar year for which they are established.

(b) The adjustments in the minimums shall be based on the changes which occurred in the Department of Commerce Composite Construction Cost Index during the twelve month period ending the preceding October.

(c) The adjusted minimums shall be published by the department by public notice in one or more newspapers of general circulation within the state and through a written notice sent to each health care facility subject to the requirements of the certificate of need program, and each statewide organization of such health care facilities.

[Statutory Authority: Chapter 70.38 RCW. 96-24-052, § 246-310-900, filed 11/27/96, effective 12/28/96. Statutory Authority: RCW 70.38.135 and 70.38.919. 92-02-018 (Order 224), § 246-310-900, filed 12/23/91, effective 1/23/92.]

WAC 246-310-990 Certificate of need review fees. (1) An application for a certificate of need under chapter 246-310 WAC must include payment of a fee consisting of the following:

(a) A review fee based on the facility/project type;

(b) If more than one facility/project type applies to an application, the review fee for each type of facility/project must be included.

Facility/Project Type	Review Fee
Ambulatory Surgical Centers/Facilities	$17,392.00
Amendments to Issued Certificates of Need	$10,961.00
Emergency Review	$7,055.00
Exemption Requests	
• Continuing Care Retirement Communities (CCRCs)/Health Maintenance Organization (HMOs)	$7,055.00
• Bed Banking/Conversions	$1,147.00
• Determinations of Nonreviewability	$1,639.00
• Hospice Care Center	$1,476.00
• Nursing Home Replacement/Renovation Authorizations	$1,476.00
• Nursing Home Capital Threshold under RCW 70.38.105 (4)(e) (Excluding Replacement/Renovation Authorizations)	$1,476.00
• Rural Hospital/Rural Health Care Facility	$1,476.00
Extensions	
• Bed Banking	$656.00
• Certificate of Need/Replacement Renovation Authorization Validity Period	$656.00
Home Health Agency	$21,001.00
Hospice Agency	$18,704.00
Hospice Care Centers	$10,961.00
Hospital (Excluding Transitional Care Units-TCUs, Ambulatory Surgical Center/Facilities, Home Health, Hospice, and Kidney Disease Treatment Centers)	$34,457.00
Kidney Disease Treatment Centers	$21,331.00
Nursing Homes (Including CCRCs and TCUs)	$39,380.00

(2) The fee for amending a pending certificate of need application is determined as follows:

(a) If an amendment to a pending certificate of need application results in the addition of one or more facility/project types, the review fee for each additional facility/project type must accompany the amendment application;

(b) If an amendment to a pending certificate of need application results in the removal of one or more facility/project types, the department shall refund to the applicant the difference between the review fee previously paid and the review fee applicable to the new facility/project type; or

(c) If an amendment to a pending certificate of need application results in any other change as identified in WAC

246-310-100, a fee of one thousand seven hundred fifty-six dollars must accompany the amendment application.

(3) If a certificate of need application is returned by the department under WAC 246-310-090 (2)(b) or (e), the department shall refund seventy-five percent of the review fees paid.

(4) If an applicant submits a written request to withdraw a certificate of need application before the beginning of review, the department shall refund seventy-five percent of the review fees paid by the applicant.

(5) If an applicant submits a written request to withdraw a certificate of need application after the beginning of review, but before the beginning of the ex parte period, the department shall refund one-half of all review fees paid.

(6) If an applicant submits a written request to withdraw a certificate of need application after the beginning of the ex parte period the department shall not refund any of the review fees paid.

(7) Review fees for exemptions and extensions are nonrefundable.

[Statutory Authority: RCW 43.70.250, 70.38.105, 18.46.030, 70.127.090, 43.70.040. 08-12-036, § 246-310-990, filed 5/30/08, effective 7/1/08. Statutory Authority: RCW 43.70.250 and 70.38.105(5). 03-22-020, § 246-310-990, filed 10/27/03, effective 11/27/03. Statutory Authority: Chapters 70.127 and 70.38 RCW. 03-07-096, § 246-310-990, filed 3/19/03, effective 4/19/03. Statutory Authority: RCW 70.38.105 and 2002 c 371. 02-14-051, § 246-310-990, filed 6/27/02, effective 7/28/02. Statutory Authority: RCW 70.38.105(5) and 43.70.110. 01-15-094, § 246-310-990, filed 7/18/01, effective 8/18/01. Statutory Authority: RCW 70.38.105(5). 99-23-089, § 246-310-990, filed 11/16/99, effective 12/17/99. Statutory Authority: Chapter 70.38 RCW. 96-24-052, § 246-310-990, filed 11/27/96, effective 12/28/96. Statutory Authority: RCW 70.38.135, 43.70.250 and 70.38.919. 92-02-018 (Order 224), § 246-310-990, filed 12/23/91, effective 1/23/92. Statutory Authority: RCW 43.70.040. 91-02-049 (Order 121), recodified as § 246-310-990, filed 12/27/90, effective 1/31/91. Statutory Authority: Chapter 70.38 RCW. 90-15-001 (Order 070), § 440-44-030, filed 7/6/90, effective 8/6/90. Statutory Authority: RCW 43.20A.055. 89-21-042 (Order 2), § 440-44-030, filed 10/13/89, effective 11/13/89; 87-16-084 (Order 2519), § 440-44-030, filed 8/5/87; 87-12-049 (Order 2494), § 440-44-030, filed 6/1/87; 84-13-006 (Order 2109), § 440-44-030, filed 6/7/84; 83-21-015 (Order 2037), § 440-44-030, filed 10/6/83. Statutory Authority: 1982 c 201. 82-13-011 (Order 1825), § 440-44-030, filed 6/4/82.]

Chapter 246-312 WAC

ACQUISITION OF NONPROFIT HOSPITALS

WAC

PART I - GENERAL PROVISIONS

246-312-010 Purpose.
246-312-020 Definitions.

PART II - APPLICATION REQUIREMENTS

246-312-030 Application information.
246-312-035 Amendments to the application.
246-312-040 Documents required.

PART III - REVIEW PROCESS

246-312-050 Criteria the department will use for review.
246-312-060 Timelines for review.
246-312-070 Public hearing.

PART IV - ACQUISITION APPROVAL OR DISAPPROVAL

246-312-080 Grounds for approval, disapproval or modification of an acquisition.
246-312-090 Appeals.

PART V - COMPLIANCE WITH DEPARTMENT'S DECISION

246-312-100 Compliance with the terms of the acquisition and the department's decision.
246-312-200 Public health care service district (also known as public hospital district).
246-312-990 Fees.

PART I - GENERAL PROVISIONS

WAC 246-312-010 Purpose. The purpose of this chapter is to implement chapter 332, Laws of 1997, the nonprofit hospital sales review program. The legislature has determined that the state has an interest to assure the continued existence of accessible, affordable health care facilities. To achieve this goal the department of health is responsible for reviewing and approving the acquisition of nonprofit hospitals by for-profit entities. The department may approve an acquisition of a nonprofit hospital only if it determines that the nonprofit hospital has taken appropriate steps to safeguard charitable assets and any proceeds of the acquisition are used for appropriate charitable health and health care purposes.

[Statutory Authority: 1997 c 332 § 14. 97-21-052, § 246-312-010, filed 10/13/97, effective 11/13/97.]

WAC 246-312-020 Definitions. "Acquisition of a nonprofit hospital" means an acquisition by a person of an interest in a nonprofit hospital, whether by a purchase, merger, lease, gift, joint venture, or otherwise, that results in a change of ownership or control of twenty percent or more of the assets of the hospital, or that results in the acquiring person holding or controlling fifty percent or more of the assets of the hospital.

This type of acquisition does not include a transaction where the acquiring person:

- Is a nonprofit corporation having a substantially similar charitable health care purpose as the nonprofit corporation from whom the hospital is being acquired, or is a government entity;
- Is exempt from federal income tax under section 501 (c)(3) of the Internal Revenue Code or as a government entity; and
- Will maintain representation from the affected community on the local board of the hospital.

"Acquisition of a hospital owned by a public hospital district" means an acquisition by a person of any interest in that hospital, whether by a purchase, merger, lease, or otherwise, that results in a change of ownership or control of twenty percent or more of the assets of a hospital currently licensed and operating under RCW 70.41.090.

Acquisition of a public hospital district hospital does not include a transaction where the other party or parties are:

- Nonprofit corporations having a substantially similar charitable health care purpose;
- Organizations exempt from federal income tax under section 501 (c)(3) of the Internal Revenue Code; or
- Governmental entities.

This type of acquisition also does not include a transaction where the other party:

- Is an organization that is a limited liability corporation, a partnership, or any other legal entity and the members, partners, or otherwise designated control-

ling parties of the organization are all nonprofit corporations having a charitable health care purpose;

- Are organizations exempt from federal income tax under section 501 (c)(3) of the Internal Revenue Code; or
- Are governmental entities.

"Agreement" means a contract, arrangement, or understanding, whether formal or informal, oral or written.

"Applicant" means the acquiring party.

"Attorney general" means the Washington state attorney general.

"Department" means the Washington state department of health.

"Document" means all computer files and any written, recorded, or graphic material of every kind, that is in a person's possession, custody, or control, regardless of the form of the media in which it is preserved or by whom it was prepared. It includes electronic correspondence and drafts of documents, copies of documents that are not identical duplicates of the originals, and copies of documents the originals of which are not in one's possession, custody or control.

"Hospital" means any entity that is: Defined as a hospital in RCW 70.41.020 and is required to obtain a license under RCW 70.41.090; or a psychiatric hospital required to obtain a license under chapter 71.12 RCW.

"Identify" means to provide a statement of: In the case of a person other than a natural person, the names, address (including ZIP code) of the principal place of business, telephone number, and name of chief executive officer; in the case of a natural person, his or her name, business address (including ZIP code) and business telephone number, employer and title or position; in the case of a document, the title of the document, the author, the title or position of the addressee, the type of document, the date it was prepared, the number of pages it comprises, and, if applicable, its production number; in the case of a communication, the date of the communication, the type of communication (telephone conversation, number etc.), the place where the communication took place, the identity of the person who made the communication, the identity of each person who received the communication and each person present when it was made, and the subject matter discussed.

"Nonprofit hospital" means a hospital owned by a nonprofit corporation organized under Title 24 RCW.

"Person" means an individual, a trust or estate, a partnership, a corporation including associations, limited liability companies, joint stock companies, and insurance companies.

"Plans" means tentative and preliminary proposals, recommendations, or considerations, whether or not finalized or authorized, as well as those that have been adopted.

"Relating to" means in whole or in part, constituting, containing, concerning, embodying, reflecting, describing, analyzing, identifying, stating, referring or dealing with, or in any way pertaining to.

[Statutory Authority: Chapter 70.45 RCW and RCW 70.44.007. 98-14-056, § 246-312-020, filed 6/26/98, effective 7/27/98.]

PART II - APPLICATION REQUIREMENTS

WAC 246-312-030 Application information. (1) Acquiring persons may obtain an application from the department.

(2) An application is determined to be complete when the acquiring person submits a completed application, the documents required in WAC 246-312-040 and required fee(s).

(3) The department may subpoena additional information or witnesses, require and administer oaths, require sworn statements, take depositions, and use related discovery procedures at any time prior to making a decision on the application.

(4) The application and supporting documents are subject to the Public Disclosure Act and any exemptions (chapter 42.17 RCW).

[Statutory Authority: Chapter 70.45 RCW and RCW 70.44.007. 98-14-056, § 246-312-030, filed 6/26/98, effective 7/27/98.]

WAC 246-312-035 Amendments to the application. The applicant may submit amendments to its application at any time. Timelines will begin again from the application stage of the review process. A processing and review fee is required for each amendment.

[Statutory Authority: Chapter 70.45 RCW and RCW 70.44.007. 98-14-056, § 246-312-035, filed 6/26/98, effective 7/27/98.]

WAC 246-312-040 Documents required. (1) The acquiring person shall submit as part of the application for approval three copies of the required documents to the Department of Health, Office of Health Systems Development, P.O. Box 47851, Olympia, Washington 98504-7851 and one copy to the Attorney General's Office, Antitrust Section, 900 4th Avenue, Suite 2000, Seattle, Washington 98164-1012. The official date of receipt shall be the date the application is received at the department of health.

(2) Each document submitted shall identify which request the document is responsive to, using the list below. If the requested document does not exist the acquiring party shall note "does not exist" on a page for that document.

(3) The acquiring party shall submit, or, as appropriate, obtain from the nonprofit hospital and then submit:

(a) The articles of incorporation of the nonprofit hospital, including all amendments thereto from inception to the present.

(b) The bylaws of the nonprofit hospital, including all amendments thereto from inception to the present.

(c) All documents reflecting the terms and conditions of any restricted gifts or bequests to the nonprofit hospital in excess of ten thousand dollars.

(d) A list identifying all trustees, officers and directors of the nonprofit hospital who have served at any time during the seven years prior to the application.

(e) A list identifying each and every officer, trustee or director of the nonprofit hospital (or any immediate family member of such persons) or any affiliate of the nonprofit who has any personal financial interest (other than salary and directors/trustees' fees) in any company, firm, partnership, or other business entity that is currently doing business, or has

previously done business, with the nonprofit hospital or any affiliate of the nonprofit hospital or the acquiring person or any affiliate of the acquiring person.

(f) A statement summarizing the procedure which the nonprofit hospital's board of directors used to evaluate the proposed acquisition.

(g) All documents reflecting a decision by the board of directors of the nonprofit hospital to delegate to any committee, or group smaller than the entire board, the responsibility for reviewing or considering any potential change of ownership or control of the nonprofit's assets.

(h) All documents relating to discussions, deliberations or consideration by the nonprofit hospital's board of directors or any committee or individual members thereof of any possible change of ownership or control of the hospital's assets including the proposed acquisition and specific alternatives to the proposed acquisition.

(i) An affidavit from each member of the board of directors of the nonprofit hospital which contains a statement that the individual has no conflict of interest in the proposed acquisition or otherwise shall disclose any and all actual or potential individual conflicts of interest.

(j) Copies of the two most recent "community needs assessment" or similar evaluations or assessments prepared by or for the nonprofit hospital. Identify all individuals or entities which assisted or contributed to any such evaluations or assessments.

(k) All documents relating to communications between the nonprofit hospital and any consultants retained to assist in the process of considering or deciding whether to enter into the proposed acquisition including any valuation of the assets involved in the proposed acquisition, retention letters or contracts, and any and all materials relied upon to support any conclusions as to valuation.

(l) All documents relating to any relationship between the nonprofit hospital and valuation consultant.

(m) The financial and economic analysis and report from an independent consultant relating to the proposed acquisition and the supporting documents which form the basis for this report, and any other documentation reflecting valuation determinations of any of the nonprofit hospital's assets that are subject to the proposed acquisition.

(n) Copies of all requests for proposal sent to any potential acquiring person and all responses received thereto by the nonprofit hospital.

(o) All documents relating to the reasons why any potential acquiring person was excluded by the nonprofit hospital from further consideration as a potential acquiring person of the assets involved in the proposed acquisition.

(p) All documents reflecting the deliberative process used by the nonprofit hospital in selecting the acquiring person.

(q) Copies of each proposal received by the nonprofit hospital and documents which reflect any analysis thereof. Identify all analysts involved.

(r) All documents relating to the nonprofit hospital's board of directors' evaluation of the option of continuing as a nonprofit entity or pursuing the proposed acquisition or similar transaction with another nonprofit entity.

(s) All documents relating to the nonprofit hospital's plan for use of any proceeds after close of the proposed acquisition together with a statement explaining how the proposed plan complies with all applicable charitable trusts that govern use of the nonprofit hospital's assets. The plan must include any proposed amendments to the nonprofit hospital's articles of incorporation and bylaws or any articles of incorporation and bylaws of any entity that will control any of the proceeds from the proposed transfer. Attach any Internal Revenue Service opinions related to the above.

(t) A statement from the nonprofit hospital's board of directors which contains all the reasons for the board's conclusion that the proposed acquisition is necessary or desirable and is appropriate under the circumstances, and which contains the board's conclusions regarding the effects which the proposed acquisition will likely have on delivery of health related services to the community served by each facility involved in the proposed acquisition, and the basis for this opinion. The statement shall also describe all dissenting viewpoints presented.

(u) Copies of the prior five annual audited financial statements and the most current unaudited financial statement for the nonprofit hospital.

(v) A detailed statement of any actual or contingent liabilities retained by the nonprofit hospital posttransaction.

(w) All requests for opinions to the Internal Revenue Service for rulings related to the proposed acquisition and any Internal Revenue Service responses thereto.

(x) A pro forma balance sheet for the surviving or successor nonprofit entity posttransaction.

(y) A statement describing how the survivor or the successor nonprofit entity plans to deal with the right of first refusal to repurchase the assets involved in this transaction, along with a copy of any proposed contract, agreement or understanding regarding the same.

(z) A detailed statement describing how representatives of the community will be involved in the governance of the successor nonprofit entity.

(aa) A statement containing any other information the nonprofit hospital believes the attorney general should consider in deciding whether the proposed acquisition is in the public interest.

(bb) All proposed written agreements or contracts between the nonprofit hospital and the acquiring person relating to the proposed acquisition.

(cc) All documents relating to any personal financial benefit that the proposed acquisition may confer on any officer, director, trustee, employee, doctor, medical group, consultant, or any other entity affiliated with the nonprofit hospital or any immediate family member of any such person.

(dd) All documents relating to any relationship between the acquiring person and valuation consultant.

(ee) Copies of any proposed contract, agreement or understanding relating to the proposed acquisition between the acquiring person and any officer, director, trustee, consultant, or committee member of the nonprofit hospital, or consultants thereto, or any other party to the acquisition.

(ff) A detailed statement and all documents relating to the parties' plans to ensure the community's continued access to affordable health care posttransaction and plans regarding any anticipated reduction or elimination of any health ser-

vices posttransaction and the availability of alternative services should such elimination or reduction occur.

(gg) A detailed statement and all documents relating to the parties' plans for assuring the continuance of existing hospital privileges posttransaction.

(hh) A detailed statement and all documents relating to the parties' plans for ensuring the maintenance of appropriate health science research and health care provider education posttransaction.

(ii) A detailed statement and all documents relating the parties' plans for ensuring safeguards to avoid conflict of interest in posttransaction patient referral.

(jj) A detailed statement and all documents relating to the parties' commitment and plans to provide health care to the disadvantaged, the uninsured, and the underinsured and how benefits to promote improved health in the affected community will be provided posttransaction.

(4) The attorney general and the department of health reserve the right to request additional information and documents as deemed reasonably necessary to determine compliance with chapter 70.45 RCW, the Nonprofit Hospital Sales Act.

[Statutory Authority: Chapter 70.45 RCW and RCW 70.44.007. 98-14-056, § 246-312-040, filed 6/26/98, effective 7/27/98.]

PART III - REVIEW PROCESS

WAC 246-312-050 Criteria the department will use for review. (1) Chapter 70.45 RCW states that the department may not approve an application unless, at a minimum, it determines that:

(a) The acquisition is permitted under chapter 24.03 RCW, the Washington Nonprofit Corporation Act, and other laws governing nonprofit entities, trusts, or charities;

(b) The nonprofit corporation that owns the hospital being acquired has exercised due diligence in authorizing the acquisition, selecting the acquiring person, and negotiating the terms and conditions of the acquisition;

(c) The procedures used by the nonprofit corporation's board of trustees and officers in making its decision fulfilled their fiduciary duties, that the board and officers were sufficiently informed about the proposed acquisition and possible alternatives, and that they used appropriate expert assistance;

(d) There is no conflict of interest related to the acquisition, including, but not limited to, board members and executives of, and experts retained by, the nonprofit corporation, acquiring person, or other parties to the acquisition;

(e) The nonprofit corporation will receive fair market value for its assets. The attorney general or the department may employ reasonably necessary expert assistance in making this determination. The acquiring person is responsible for any cost of this expert assistance, in addition to the fees charged under WAC 246-312-990;

(f) If the acquisition is financed in part by the nonprofit corporation, that charitable funds will not be placed at unreasonable risk;

(g) Any management contract under the acquisition is for fair market value;

(h) The proceeds from the acquisition will be controlled as charitable funds independently of the acquiring person or parties to the acquisition, and will be used for charitable health purposes consistent with the nonprofit corporation's original purpose. Charitable health purposes include providing health care to the disadvantaged, the uninsured, and the underinsured, and providing benefits to promote improved health in the affected community;

(i) The charitable entity established to hold the proceeds of the acquisition will be broadly based in, and representative of, the community where the hospital to be acquired is located, taking into consideration the structure and governance of such entity; and

(j) If the hospital is subsequently sold to, acquired by, or merged with another entity that a right of first refusal to repurchase the assets by a successor nonprofit corporation or foundation has been retained.

(2) Based on chapter 70.45 RCW, the department shall not approve an application unless, at a minimum, it determines that:

(a) If the acquisition results in a reduction or elimination of particular health services, that sufficient safeguards are included to assure the affected community has continued access to affordable care, and that alternative sources of care are available in the community;

(b) Hospital privileges will not be revoked;

(c) Sufficient safeguards are included to maintain appropriate capacity for health science research and health care provider education;

(d) The parties to the acquisition are committed to providing health care to the disadvantaged, the uninsured, and the underinsured and to providing benefits to promote improved health in the affected community; and

(e) Sufficient safeguards are included to avoid conflict of interest in patient referral.

(3) The department may only approve an acquisition if it also determines that the acquisition will not detrimentally affect the continued existence of accessible, affordable health care that is responsive to the needs of the community where the hospital being acquired is located.

[Statutory Authority: Chapter 70.45 RCW and RCW 70.44.007. 98-14-056, § 246-312-050, filed 6/26/98, effective 7/27/98.]

WAC 246-312-060 Timelines for review. (1) For good cause, the department of health or the attorney general may request a one-time, thirty-day extension to each timeline.

(2) The department, in consultation with the attorney general, will determine if an application is complete within fifteen working days of the receipt of the application package, documents and required fee(s). If a determination is made that the application is incomplete, the applicant will be notified of the reasons the application is incomplete, with reference to the particular deficiencies.

(3) The department will publish a notice of the application in the newspaper(s) in the county or counties where the hospital is located within five working days of receiving a completed application. The department will notify any person who has requested to receive such notices. The notice shall contain:

(a) Information about the parties to the acquisition;

(b) Where and when to send comments to the department; and

(c) Other information required for adequate public notice of the transaction and the department's review.

(4) Within forty-five days of the first public hearing, the attorney general will provide a written opinion to the department as to whether the acquisition meets the requirements for approval as required by chapter 70.45 RCW.

(5) Within thirty days of receiving the written opinion from the attorney general, the department will:

(a) Approve the acquisition, with or without any specific modification or conditions; or

(b) Disapprove the acquisition.

[Statutory Authority: Chapter 70.45 RCW and RCW 70.44.007. 98-14-056, § 246-312-060, filed 6/26/98, effective 7/27/98.]

WAC 246-312-070 Public hearing. (1) The department will hold at least one public hearing in the county where the hospital being acquired is located. Any person may provide written or oral testimony. The department reserves the right to limit the time each presenter may have to make an oral statement.

(2) The department may subpoena witnesses or information, administer oaths, take depositions, and use related discovery procedures.

[Statutory Authority: Chapter 70.45 RCW and RCW 70.44.007. 98-14-056, § 246-312-070, filed 6/26/98, effective 7/27/98.]

PART IV - ACQUISITION APPROVAL OR DISAPPROVAL

WAC 246-312-080 Grounds for approval, disapproval or modification of an acquisition. (1) The department's decision must be based on the requirements of chapter 70.45 RCW. Any condition or modification must have a direct and rational relationship to the application under review.

(2) The written opinion of the attorney general may not constitute a final decision for purposes of review.

(3) The department will only approve an application if the parties to the acquisition have taken the proper steps to safeguard the value of charitable assets and to ensure that any proceeds from the acquisition are used for appropriate charitable health purposes.

[Statutory Authority: Chapter 70.45 RCW and RCW 70.44.007. 98-14-056, § 246-312-080, filed 6/26/98, effective 7/27/98.]

WAC 246-312-090 Appeals. The acquiring person or nonprofit hospital may appeal a decision made by the department of health under the Administrative Procedure Act (chapter 34.05 RCW).

[Statutory Authority: Chapter 70.45 RCW and RCW 70.44.007. 98-14-056, § 246-312-090, filed 6/26/98, effective 7/27/98.]

PART V - COMPLIANCE WITH DEPARTMENT'S DECISION

WAC 246-312-100 Compliance with the terms of the acquisition and the department's decision. (1) At the time of the final decision, the department will notify the parties to the acquisition whether the nonprofit hospital, the acquiring party, or both, must submit periodic reports detailing how commitments made are being adhered to. The frequency of the reports will also be determined at that time, and will not be more frequent than semiannually but no less frequent than every three years.

(2) Any person, whether a party of the initial acquisition or not, may submit information concerning whether the acquiring person is fulfilling the terms of the acquisition and the department's approval or conditions. If the department determines there is reasonable cause to believe that the information indicates failure to comply, a public hearing will be held. The department must give at least ten days' written notice to the affected parties, including the local community affected.

(3) The cost of the public hearing and any on-site reviews related to determining the validity of the allegations will be borne by the acquiring parties.

(4) If the department finds that the parties to the acquisition have failed to adhere to their commitments or the conditions of the department's approval, the department may:

(a) Revoke or suspend the hospital license pursuant to RCW 70.41.130;

(b) Refer the matter to the attorney general for appropriate action; or

(c) Both.

(5) The attorney general may seek a court order compelling the acquiring person to fulfill its commitments under chapter 70.45 RCW.

(6) The attorney general has the authority to ensure compliance with commitments that inure to the public interest. No provision of chapter 70.45 RCW, derogates from the common law or statutory authority of the attorney general.

[Statutory Authority: Chapter 70.45 RCW and RCW 70.44.007. 98-14-056, § 246-312-100, filed 6/26/98, effective 7/27/98.]

WAC 246-312-200 Public health care service district (also known as public hospital district). (1) Prior to approving the acquisition of a public health care service district hospital, the district board of commissioners must obtain a written opinion from a qualified independent expert or the department of health as to whether or not the acquisition meets the review criteria in RCW 70.45.080.

(2) If requested by the district to conduct a review, the department will charge the district for the review costs as provided in the fee schedule (WAC 246-312-990).

(3) The department will deliver its opinion within ninety days of the district's request.

[Statutory Authority: Chapter 70.45 RCW and RCW 70.44.007. 98-14-056, § 246-312-200, filed 6/26/98, effective 7/27/98.]

WAC 246-312-990 Fees. (1) The department will assess on the acquiring party a nonrefundable application processing fee, a review fee and other charges as authorized in chapter 332, Laws of 1997. The fees shall consist of the following:

Processing Fees	Nonrefundable Processing Fee
Each New Application will be subject to a	$1,000
Each Amendment to an application undergoing review will be subject to a	$ 500

Type of Acquisition Description	Review Fee
Acquisition of 20% or more of the assets of the hospital	$40,000
Change in current ownership position that results in acquiring party holding or controlling 50% or more of the hospital assets	$50,000
Any Other Change in Ownership	$60,000
Amendment to an approved Change of Ownership	$15,000
Other Fees (When Applicable)	**Fee Amount**
Exemption Determinations	$ 250
Fair Market Value Determination- **Nonrefundable**	$ Based on Contracted Amount
Public Health Services District- Voluntary Review	$ To be billed at Cost
On-Site Compliance Visit- **Nonrefundable**	$ To be billed at Cost
Attorney General Opinion- **Nonrefundable**	$ As billed to the department by the attorney general's office

(2) When an applicant submits a written request to withdraw an application, the department shall refund the review fee using the following schedule:

Time Period For Requesting Withdrawal of Application	Amount of Review Fee to be Refunded
Within 10 working days after receipt of the completed application	100%
Between the 11th working day and the 45th working day after receipt of the completed application	50%
After the 45th working day	0%

(3) Fees for the fair market value determination shall be paid in addition to the applicable processing and application review fees. These fees shall be based on the contracted amount for consultants with the expertise to make such an evaluation. The acquiring party is responsible for this payment. If payment of this fee is not made within ten working days following being billed, the review of the application shall be suspended until payment is made.

(4) Fees for the public health services district voluntary review shall be paid by the public health services district. These fees shall be billed at cost and must be paid within ten working days of being billed.

(5) Fees for the attorney general's opinion shall be paid in addition to the applicable processing and application review fees. These fees shall be based on the charges billed to the department and then billed to the acquiring party. Fees must be paid within ten working days of being billed or the review of the application shall be suspended until payment is made.

[Statutory Authority: 1997 c 332 § 14. 97-21-052, § 246-312-990, filed 10/13/97, effective 11/13/97.]

Chapter 246-314 WAC
CONSTRUCTION REVIEW SERVICES

WAC

246-314-001 Purpose.
246-314-010 Definitions.
246-314-015 Application requirements.
246-314-990 Construction review fees.

WAC 246-314-001 Purpose. The purpose of this chapter is to establish fees to support the department's predesign, subsequent review, approval activities, and to enable the department to provide technical assistance for health and residential care facility construction projects.

[Statutory Authority: RCW 43.70.110. 06-16-118, § 246-314-001, filed 8/1/06, effective 9/1/06; 91-16-107 (Order 185), § 246-314-001, filed 8/7/91, effective 9/7/91. Statutory Authority: RCW 43.70.040. 91-02-050 (Order 122), § 246-314-001, filed 12/27/90, effective 1/31/91.]

WAC 246-314-010 Definitions. For the purpose of this chapter the following words and phrases will have the following meanings unless the context clearly indicates otherwise:

(1) "Certified" means facilities that must be certified to participate in medicare or medicaid programs and meet physical environment minimum standards as required in the Code of Federal Regulations.

(2) "Change of approved use only" means a change in the function of a room that does not alter the physical elements.

(3) "Interior finishes" means products such as carpet, vinyl wall covering, wall paper, or paneling applied to an existing surface as the exposed surface.

(4) "Licensed" means facilities licensed from the state department of health (DOH) or state department of social and health services (DSHS) that must obtain approval from construction review services before licensure activity.

(5) "Permit" means a recommendation to the licensing or certifying authority from construction review services indicating that a facility meets the physical environment rules and the plan review process is complete.

(6) "Program" means the Washington state department of health, construction review services.

(7) "Project" means a change to a facility including new construction, replacement, alterations, additions, expansions, conversions, change of approved use, improvements, remodeling, renovating, and upgrading of the following types of facilities:

(a) "Ambulatory surgery center" defined as a facility that is required to be certified for participation in medicare or medicaid;

(b) "Boarding homes" licensed under chapters 18.20 RCW and 388-78A WAC;

(c) "Correctional facilities" as defined under RCW 43.70.130(8);

(d) "Hospice care center" licensed under chapters 70.127 RCW and 246-335 WAC;

(e) "Hospitals" licensed under chapters 70.41 RCW and 246-320 WAC;

(f) "Maternity homes" and "childbirth centers" licensed under chapters 18.46 RCW and 246-329 WAC;

(g) "Migrant worker housing" licensed under chapter 246-359 WAC. Plan review fees for migrant worker housing are set in chapters 246-358, 246-359, and 246-361 WAC;

(h) "Nursing homes" licensed under chapters 18.51 RCW and 388-97 WAC;

(i) "Private alcoholism hospitals" licensed under chapters 71.12 RCW and 246-324 WAC;

(j) "Private psychiatric hospitals" licensed under chapters 71.12 RCW and 246-322 WAC; and

(k) "Residential treatment facilities" licensed under chapters 71.12 RCW and 246-337 WAC.

(8) "Project cost" means all costs directly associated with the project, initially estimated and corrected by certification to the date of completion of the project and including all fixed and installed clinical equipment in the project and contractor supervision, inspection, and overhead. This cost does not include:

(a) Taxes;

(b) Architectural or engineering fees; and

(c) Land acquisition fees.

(9) "Project sponsor" means the person, persons or organization, planning and contracting for the design and construction of facilities, generally the owner or the owner's representative.

(10) "Technical assistance" means assistance provided by the program to facilities either at the program offices or at the project location including:

(a) Information on the laws, rules and compliance methods and technologies applicable to the regulations;

(b) Information on methods to avoid compliance problems;

(c) Assistance in applying for permits, licensure or certification;

(d) Information on the mission, goals, and objectives of the program; and

(e) Assistance to parties constructing projects not required to be licensed or certified and voluntarily wish to comply with rules or guidelines in the interest of safety or best practices.

(11) "Value of existing construction" means the value of an existing building or portion thereof at the time of project submission, based on the current market value of the structure as documented by the project sponsor, or, as determined by assigning a cost per square foot value.

[Statutory Authority: RCW 43.70.110. 06-16-118, § 246-314-010, filed 8/1/06, effective 9/1/06; 91-16-107 (Order 185), § 246-314-010, filed 8/7/91, effective 9/7/91. Statutory Authority: RCW 43.70.040. 91-02-050 (Order 122), § 246-314-010, filed 12/27/90, effective 1/31/91.]

WAC 246-314-015 Application requirements. The project sponsor shall submit to the program:

(1) An estimated permit value at the time of application. Permit valuations include the total value of work, including materials and labor, such as electrical, gas, mechanical, plumbing equipment and permanent systems. If the program determines the valuation is underestimated, the program shall deny the application unless the applicant can show detailed estimates to meet the program's approval. Final building permit valuation is set by program;

(2) A completed project review application form with project documents for review;

(3) Documentation as required by the applicable licensing or certification rules; and

(4) The appropriate fee based upon the initial project construction cost as determined from the construction fee table in WAC 246-314-990.

[Statutory Authority: RCW 43.70.110. 06-16-118, § 246-314-015, filed 8/1/06, effective 9/1/06.]

WAC 246-314-990 Construction review fees. (1) Upon prior approval by the program the project sponsor may exclude from the "project cost" the cost for fixed or installed technologically advanced clinical equipment such as but not limited to: Lithotripters, CT scans, linear accelerators, and MRIs.

(2) The program shall charge a flat fee for the review of the following projects:

(a) Installation of interior finishes only, one hundred twenty dollars;

(b) Change of approved use only, one hundred twenty dollars;

(c) The first submission for review and approval of the site installation of a mobile unit, four hundred seventy dollars. Each additional submission of the same project, two hundred eighty-five dollars;

(d) The first submission for review and approval of the equipment supplier of a mobile unit, four hundred seventy dollars. Each additional submission of the same project, two hundred eighty-five dollars;

(e) Each eight staff hours or fraction thereof for technical assistance, four hundred ten dollars. For technical assistance requiring travel, the program may increase the fee to include travel.

(3) Building conversion fees will be based on the value of existing construction and derived from the fee schedule. The existing construction value is based on the local area cost data. Current cost data will be made available and posted on the construction review services web site. Project sponsors may submit specific cost data that accurately describes the estimate good faith value for the program's consideration.

CONSTRUCTION FEE TABLE

Project Cost			Project Review Fee
$ 0	to	$ 999	$ 120
1,000	to	1,999	250
2,000	to	2,999	325
3,000	to	4,999	410
5,000	to	9,999	530
10,000	to	19,999	665
20,000	to	29,999	820
30,000	to	39,999	975
40,000	to	49,999	1,125
50,000	to	64,999	1,325
65,000	to	79,999	1,535
80,000	to	99,999	1,845
100,000	to	124,999	2,200
125,000	to	149,999	2,550
150,000	to	199,999	2,970
200,000	to	249,999	3,325
250,000	to	324,999	3,650

CONSTRUCTION FEE TABLE

Project Cost			Project Review Fee
325,000	to	449,999	4,100
450,000	to	574,999	4,600
575,000	to	699,999	5,200
700,000	to	849,999	5,825
850,000	to	999,999	6,550
1,000,000	to	1,249,999	7,150
1,250,000	to	2,499,999	7,850
2,500,000	to	2,999,999	8,550
3,000,000	to	3,499,999	9,300
3,500,000	to	4,999,999	10,750
5,000,000	to	6,999,999	12,200
7,000,000	to	9,999,999	13,800
10,000,000	to	14,999,999	15,850
15,000,000	to	19,999,999	17,850
20,000,000	to	29,999,999	19,900
30,000,000	to	39,999,999	23,000
40,000,000	to	59,999,999	25,600
60,000,000	and over		28,700

(4) **Fee reductions.** The program may decrease the project review fees, when:

(a) The project sponsor requests a reduction in the fee according to subsection (1) of this section;

(b) The project is prepared by a state licensed architect or engineer when architectural or engineering services are not required by rule. In this case the project may qualify for a reduction of up to fifteen percent;

(c) A facility is converted from another occupancy as defined by the state building code; a facility is converted from one license to another; or, a facility that is currently unlicensed, but was previously licensed through the DOH or DSHS, wishes to be reviewed for licensure, then the construction review fee reduction of up to fifty percent from that shown on the construction review fee schedule shall be allowed. The amount of fee reduction will be determined by the estimated amount of systems review required to ensure that the rules have been met;

(d) Total fee reductions may not exceed seventy percent of the original estimated review fee.

(5) **Refunds.** The program shall refund fees paid when requested by the applicant as follows:

(a) The final project cost as shown on the project completion card is less than the project cost shown on the application.

(b) If an application and fee has been received but no plan review or technical assistance has been performed by the program, three-fourths of the fees paid;

(c) If an application and fee has been received and plan review or technical assistance has been performed by the department, one-half of the fees paid;

(d) No fees paid by the applicant will be refunded if any of the following applies:

(i) More than two on-site visits, conferences, or plan reviews for any purpose have been performed by the program;

(ii) One year has elapsed since an application and fee is received by the program, but no permit is issued because applicant failed to complete requirements for permit;

(iii) The amount to be refunded as calculated by (a), (b), or (c) of this subsection is one hundred twenty dollars or less;

(iv) Approval or authorization to begin construction has been given or construction has commenced; or

(v) A request has not been received to cancel the project.

[Statutory Authority: RCW 43.70.110. 06-16-118, § 246-314-990, filed 8/1/06, effective 9/1/06. Statutory Authority: RCW 43.70.250, 43.70.110 and 43.20B.020. 95-12-097, § 246-314-990, filed 6/7/95, effective 7/8/95. Statutory Authority: RCW 43.70.110. 91-16-107 (Order 185), § 246-314-990, filed 8/7/91, effective 9/7/91. Statutory Authority: RCW 43.70.040. 91-02-050 (Order 122), § 246-314-990, filed 12/27/90, effective 1/31/91.]

Chapter 246-320 WAC
HOSPITAL LICENSING REGULATIONS

WAC

246-320-001 Purpose and applicability of chapter.
246-320-010 Definitions.
246-320-025 On-site licensing survey.
246-320-045 Application for license—License expiration dates—Notice of decision—Adjudicative proceeding.
246-320-065 Exemptions, alternative methods, and interpretations.
246-320-085 Single license to cover two or more buildings—When permissible.
246-320-105 Criminal history, disclosure, and background inquiries.
246-320-125 Governance.
246-320-145 Leadership.
246-320-165 Management of human resources.
246-320-185 Medical staff.
246-320-205 Management of information.
246-320-225 Improving organizational performance.
246-320-245 Patient rights and organizational ethics.
246-320-265 Infection control program.
246-320-285 Pharmacy services.
246-320-305 Food and nutrition services.
246-320-325 Laboratory, imaging, and other diagnostic, treatment or therapeutic services.
246-320-345 Inpatient care services.
246-320-365 Specialized patient care services.
246-320-370 Emergency contraception.
246-320-385 Outpatient care services.
246-320-405 Management of environment for care.
246-320-500 Applicability of WAC 246-320-500 through 246-320-600.
246-320-505 Design, construction review, and approval of plans.
246-320-600 Washington state amendments.
246-320-615 Pharmacy.
246-320-990 Fees.

DISPOSITION OF SECTIONS FORMERLY CODIFIED IN THIS CHAPTER

246-320-515 Site and site development. [Statutory Authority: RCW 70.41.030 and 43.70.040. 99-04-052, § 246-320-515, filed 1/28/99, effective 3/10/99.] Repealed by 08-14-023, filed 6/20/08, effective 7/21/08. Statutory Authority: Chapter 70.41 RCW.

246-320-525 General design. [Statutory Authority: RCW 70.41.030 and 43.70.040. 99-04-052, § 246-320-525, filed 1/28/99, effective 3/10/99.] Repealed by 08-14-023, filed 6/20/08, effective 7/21/08. Statutory Authority: Chapter 70.41 RCW.

246-320-535 Support facilities. [Statutory Authority: RCW 70.41.-030 and 43.70.040. 99-04-052, § 246-320-535, filed 1/28/99, effective 3/10/99.] Repealed by 08-14-023, filed 6/20/08, effective 7/21/08. Statutory Authority: Chapter 70.41 RCW.

246-320-545 Maintenance, engineering, mechanical, and electrical facilities. [Statutory Authority: RCW 70.41.030 and 43.70.040. 99-04-052, § 246-320-545, filed 1/28/99, effective 3/10/99.] Repealed by 08-14-023, filed 6/20/08, effective 7/21/08. Statutory Authority: Chapter 70.41 RCW.

246-320-555 Admitting, lobby, and medical records facilities. [Statutory Authority: RCW 70.41.030 and 43.70.040. 99-04-052, § 246-320-555, filed 1/28/99, effective 3/10/99.] Repealed by 08-14-023, filed 6/20/08, effective 7/21/08. Statutory Authority: Chapter 70.41 RCW.

246-320-565 Receiving, storage, and distribution facilities. [Statutory Authority: RCW 70.41.030 and 43.70.040. 99-04-052, § 246-320-565, filed 1/28/99, effective 3/10/99.] Repealed by 08-14-023, filed 6/20/08, effective 7/21/08. Statutory Authority: Chapter 70.41 RCW.

246-320-575 Central processing service facilities. [Statutory Authority: RCW 70.41.030 and 43.70.040. 99-04-052, § 246-320-575, filed 1/28/99, effective 3/10/99.] Repealed by 08-14-023, filed 6/20/08, effective 7/21/08. Statutory Authority: Chapter 70.41 RCW.

246-320-585 Environmental services facilities. [Statutory Authority: RCW 70.41.030 and 43.70.040. 99-04-052, § 246-320-585, filed 1/28/99, effective 3/10/99.] Repealed by 08-14-023, filed 6/20/08, effective 7/21/08. Statutory Authority: Chapter 70.41 RCW.

246-320-595 Laundry and/or linen handling facilities. [Statutory Authority: RCW 70.41.030 and 43.70.040. 99-04-052, § 246-320-595, filed 1/28/99, effective 3/10/99.] Repealed by 08-14-023, filed 6/20/08, effective 7/21/08. Statutory Authority: Chapter 70.41 RCW.

246-320-605 Food and nutrition facilities. [Statutory Authority: RCW 70.41.030 and 43.70.040. 99-04-052, § 246-320-605, filed 1/28/99, effective 3/10/99.] Repealed by 08-14-023, filed 6/20/08, effective 7/21/08. Statutory Authority: Chapter 70.41 RCW.

246-320-625 Laboratory and pathology facilities. [Statutory Authority: RCW 70.41.030 and 43.70.040. 99-04-052, § 246-320-625, filed 1/28/99, effective 3/10/99.] Repealed by 08-14-023, filed 6/20/08, effective 7/21/08. Statutory Authority: Chapter 70.41 RCW.

246-320-635 Surgery facilities. [Statutory Authority: RCW 70.41.030 and 43.70.040. 99-04-052, § 246-320-635, filed 1/28/99, effective 3/10/99.] Repealed by 08-14-023, filed 6/20/08, effective 7/21/08. Statutory Authority: Chapter 70.41 RCW.

246-320-645 Recovery/post anesthesia care unit (PACU). [Statutory Authority: RCW 70.41.030 and 43.70.040. 99-04-052, § 246-320-645, filed 1/28/99, effective 3/10/99.] Repealed by 08-14-023, filed 6/20/08, effective 7/21/08. Statutory Authority: Chapter 70.41 RCW.

246-320-655 Obstetrical delivery facilities. [Statutory Authority: RCW 70.41.030 and 43.70.040. 99-04-052, § 246-320-655, filed 1/28/99, effective 3/10/99.] Repealed by 08-14-023, filed 6/20/08, effective 7/21/08. Statutory Authority: Chapter 70.41 RCW.

246-320-665 Birthing/delivery rooms, labor, delivery, recovery (LDR) and labor, delivery, recovery, postpartum (LDRP). [Statutory Authority: RCW 70.41.030 and 43.70.040. 99-04-052, § 246-320-665, filed 1/28/99, effective 3/10/99.] Repealed by 08-14-023, filed 6/20/08, effective 7/21/08. Statutory Authority: Chapter 70.41 RCW.

246-320-675 Interventional service facilities. [Statutory Authority: RCW 70.41.030 and 43.70.040. 99-04-052, § 246-320-675, filed 1/28/99, effective 3/10/99.] Repealed by 08-14-023, filed 6/20/08, effective 7/21/08. Statutory Authority: Chapter 70.41 RCW.

246-320-685 Nursing unit. [Statutory Authority: RCW 70.41.030 and 43.70.040. 99-04-052, § 246-320-685, filed 1/28/99, effective 3/10/99.] Repealed by 08-14-023, filed 6/20/08, effective 7/21/08. Statutory Authority: Chapter 70.41 RCW.

246-320-695 Pediatric nursing unit. [Statutory Authority: RCW 70.41.030 and 43.70.040. 99-04-052, § 246-320-695, filed 1/28/99, effective 3/10/99.] Repealed by 08-14-023, filed 6/20/08, effective 7/21/08. Statutory Authority: Chapter 70.41 RCW.

246-320-705 Newborn nursery facilities. [Statutory Authority: RCW 70.41.030 and 43.70.040. 99-04-052, § 246-320-705, filed 1/28/99, effective 3/10/99.] Repealed by 08-14-023, filed 6/20/08, effective 7/21/08. Statutory Authority: Chapter 70.41 RCW.

246-320-715 Intermediate care nursery and neonatal intensive care nursery. [Statutory Authority: RCW 70.41.030 and 43.70.040. 99-04-052, § 246-320-715, filed 1/28/99, effective 3/10/99.] Repealed by 08-14-023, filed 6/20/08, effective 7/21/08. Statutory Authority: Chapter 70.41 RCW.

246-320-725 Critical care facilities. [Statutory Authority: RCW 70.41.030 and 43.70.040. 99-04-052, § 246-320-725, filed 1/28/99, effective 3/10/99.] Repealed by 08-14-023, filed 6/20/08, effective 7/21/08. Statutory Authority: Chapter 70.41 RCW.

246-320-735 Alcoholism and chemical dependency nursing unit. [Statutory Authority: RCW 70.41.030 and 43.70.040. 99-04-052, § 246-320-735, filed 1/28/99, effective 3/10/99.] Repealed by 08-14-023, filed 6/20/08, effective 7/21/08. Statutory Authority: Chapter 70.41 RCW.

246-320-745 Psychiatric facilities. [Statutory Authority: RCW 70.41.030 and 43.70.040. 99-04-052, § 246-320-745, filed 1/28/99, effective 3/10/99.] Repealed by 08-14-023, filed 6/20/08, effective 7/21/08. Statutory Authority: Chapter 70.41 RCW.

246-320-755 Rehabilitation facilities. [Statutory Authority: RCW 70.41.030 and 43.70.040. 99-04-052, § 246-320-755, filed 1/28/99, effective 3/10/99.] Repealed by 08-14-023, filed 6/20/08, effective 7/21/08. Statutory Authority: Chapter 70.41 RCW.

246-320-765 Long-term care and hospice unit. [Statutory Authority: RCW 70.41.030 and 43.70.040. 99-04-052, § 246-320-765, filed 1/28/99, effective 3/10/99.] Repealed by 08-14-023, filed 6/20/08, effective 7/21/08. Statutory Authority: Chapter 70.41 RCW.

246-320-775 Dialysis facilities. [Statutory Authority: RCW 70.41.030 and 43.70.040. 99-04-052, § 246-320-775, filed 1/28/99, effective 3/10/99.] Repealed by 08-14-023, filed 6/20/08, effective 7/21/08. Statutory Authority: Chapter 70.41 RCW.

246-320-785 Imaging facilities. [Statutory Authority: RCW 70.41.030 and 43.70.040. 99-04-052, § 246-320-785, filed 1/28/99, effective 3/10/99.] Repealed by 08-14-023, filed 6/20/08, effective 7/21/08. Statutory Authority: Chapter 70.41 RCW.

246-320-795 Nuclear medicine facilities. [Statutory Authority: RCW 70.41.030 and 43.70.040. 99-04-052, § 246-320-795, filed 1/28/99, effective 3/10/99.] Repealed by 08-14-023, filed 6/20/08, effective 7/21/08. Statutory Authority: Chapter 70.41 RCW.

246-320-805 Emergency facilities. [Statutory Authority: RCW 70.41.030 and 43.70.040. 99-04-052, § 246-320-805, filed 1/28/99, effective 3/10/99.] Repealed by 08-14-023, filed 6/20/08, effective 7/21/08. Statutory Authority: Chapter 70.41 RCW.

246-320-815 Outpatient care facilities. [Statutory Authority: RCW 70.41.030 and 43.70.040. 99-04-052, § 246-320-815, filed 1/28/99, effective 3/10/99.] Repealed by 08-14-023, filed 6/20/08, effective 7/21/08. Statutory Authority: Chapter 70.41 RCW.

246-320-99902 Appendix B—Dates of documents adopted by reference in chapter 246-320 WAC. [Statutory Authority: RCW 70.41.030 and 43.70.040. 99-04-052, § 246-320-99902, filed 1/28/99, effective 3/10/99.] Repealed by 08-14-023, filed 6/20/08, effective 7/21/08. Statutory Authority: Chapter 70.41 RCW.

WAC 246-320-001 Purpose and applicability of chapter. This chapter is adopted by the Washington state department of health to implement the provisions of chapter 70.41 RCW and establish minimum health and safety requirements for the operation, maintenance, and construction of acute care hospitals.

(1) Compliance with the regulations in this chapter does not constitute release from the requirements of applicable state and local codes and ordinances. Where regulations in this chapter exceed other codes and ordinances, the regulations in this chapter will apply:

(2) The department will review references to codes and regulations in this chapter, and:

(a) Update as necessary; and

(b) Adopt a revised list of referenced standards, if required.

[Statutory Authority: RCW 70.41.030 and 43.70.040. 99-04-052, § 246-320-001, filed 1/28/99, effective 3/10/99.]

WAC 246-320-010 Definitions. For the purposes of this chapter and chapter 70.41 RCW, the following words and phrases will have the following meanings unless the context clearly indicates otherwise:

(1) "Abuse" means injury or sexual abuse of a patient under circumstances indicating the health, welfare, and safety of the patient is harmed. Person "legally responsible" will include a parent, guardian, or an individual to whom parental or guardian responsibility is delegated (e.g., teachers, providers of residential care and treatment, and providers of day care):

(a) "Physical abuse" means damaging or potentially damaging nonaccidental acts or incidents which may result in bodily injury or death.

(b) "Emotional abuse" means verbal behavior, harassment, or other actions which may result in emotional or behavioral problems, physical manifestations, disordered or delayed development.

(2) "Agent," when used in a reference to a medical order or a procedure for a treatment, means any power, principle, or substance, whether physical, chemical, or biological, capable of producing an effect upon the human body.

(3) "Alcoholism" means an illness characterized by lack of control as to the consumption of alcoholic beverages, or the consumption of alcoholic beverages to the extent an individual's health is substantially impaired or endangered, or his or her social or economic function is substantially disrupted.

(4) "Alteration" means any change, addition, or modification to an existing hospital or a portion of an existing hospital.

"Minor alteration" means renovation that does not require an increase in capacity to structural, mechanical or electrical systems, which does not affect fire and life safety, and which does not add beds or facilities in addition to that for which the hospital is currently licensed.

(5) "Assessment" means the: (a) Systematic collection and review of patient-specific data; (b) process established by a hospital for obtaining appropriate and necessary information about each individual seeking entry into a health care setting or service; and (c) information to match an individual's need with the appropriate setting and intervention.

(6) "Authentication" means the process used to verify that an entry is complete, accurate, and final.

(7) "Child" means an individual under the age of eighteen years.

(8) "Critical care unit or service" means the specialized medical and nursing care provided to patients facing an immediate life-threatening illness or injury. The care is provided by multidisciplinary teams of highly experienced and skilled physicians, nurses, pharmacists or other allied health professionals who have the ability to interpret complex therapeutic and diagnostic information and access to highly sophisticated equipment.

(9) "Department" means the Washington state department of health.

(10) "Dietitian" means an individual meeting the eligibility requirements for active membership in the American Dietetic Association described in Directory of Dietetic Programs Accredited and Approved, American Dietetic Association, edition 100, 1980.

(11) "Double-checking" means verification of patient identity, agent to be administered, route, quantity, rate, time, and interval of administration by two persons legally qualified to administer such agent prior to administration of the agent.

(12) "Drugs" as defined in RCW 18.64.011(3) means:

(a) Articles recognized in the official U.S. pharmacopoeia or the official homeopathic pharmacopoeia of the United States;

(b) Substances intended for use in the diagnosis, cure, mitigation, treatment, or prevention of disease in man or other animals;

(c) Substances (other than food) intended to affect the structure or any function of the body of man or other animals; or

(d) Substances intended for use as a component of any substances specified in (a), (b), or (c) of this subsection but not including devices or component parts or accessories.

(13) "Emergency care to victims of sexual assault" means medical examinations, procedures, and services provided by a hospital emergency room to a victim of sexual assault following an alleged sexual assault.

(14) "Emergency contraception" means any health care treatment approved by the food and drug administration that prevents pregnancy, including, but not limited to, administering two increased doses of certain oral contraceptive pills within seventy-two hours of sexual contact.

(15) "Emergency triage" means the immediate patient assessment by a registered nurse, physician, or physician assistant to determine the nature and urgency of the person's medical need and the time and place care and treatment is to be given.

(16) "Family" means individuals important to and designated by a patient who need not be relatives.

(17) "Governing authority/body" means the person or persons responsible for establishing the purposes and policies of the hospital.

(18) "High-risk infant" means an infant, regardless of gestational age or birth weight, whose extrauterine existence is compromised by a number of factors, prenatal, natal, or postnatal needing special medical or nursing care.

(19) "Hospital" means any institution, place, building, or agency providing accommodations, facilities, and services over a continuous period of twenty-four hours or more, for observation, diagnosis, or care of two or more individuals not related to the operator who are suffering from illness, injury, deformity, or abnormality, or from any other condition for which obstetrical, medical, or surgical services would be appropriate for care or diagnosis. "Hospital" as used in this chapter does not include:

(a) Hotels, or similar places furnishing only food and lodging, or simply domiciliary care;

(b) Clinics, or physicians' offices where patients are not regularly kept as bed patients for twenty-four hours or more;

(c) Nursing homes, as defined and which come within the scope of chapter 18.51 RCW;

(d) Birthing centers, which come within the scope of chapter 18.46 RCW;

(e) Psychiatric or alcoholism hospitals, which come within the scope of chapter 71.12 RCW; nor

(f) Any other hospital or institution specifically intended for use in the diagnosis and care of those suffering from mental illness, mental retardation, convulsive disorders, or other abnormal mental conditions.

(g) Furthermore, nothing in this chapter will be construed as authorizing the supervision, regulation, or control of

the remedial care or treatment of residents or patients in any hospital conducted for those who rely primarily upon treatment by prayer or spiritual means in accordance with the creed or tenets of any well-recognized church or religious denominations.

(20) "Individualized treatment plan" means a written statement of care planned for a patient based upon assessment of the patient's developmental, biological, psychological, and social strengths and problems, and including:

(a) Treatment goals, with stipulated time frames;

(b) Specific services to be utilized;

(c) Designation of individuals responsible for specific service to be provided;

(d) Discharge criteria with estimated time frames; and

(e) Participation of the patient and the patient's designee as appropriate.

(21) "Infant" means a baby or very young child up to one year of age.

(22) "Invasive procedure" means a procedure involving puncture or incision of the skin or insertion of an instrument or foreign material into the body including, but not limited to, percutaneous aspirations, biopsies, cardiac and vascular catheterizations, endoscopies, angioplasties, and implantations. Excluded are venipuncture and intravenous therapy.

(23) "Licensed practical nurse," abbreviated LPN, means an individual licensed under provisions of chapter 18.78 RCW.

(24) "Maintenance" means the work of keeping something in suitable condition.

(25) "Medical staff" means physicians and may include other practitioners appointed by the governing authority to practice within the parameters of the governing authority and medical staff bylaws.

(26) "Medication" means any substance, other than food or devices, intended for use in diagnosing, curing, mitigating, treating, or preventing disease.

(27) "Multidisciplinary treatment team" means a group of individuals from the various disciplines and clinical services who assess, plan, implement, and evaluate treatment for patients.

(28) "Neglect" means mistreatment or maltreatment; an act or omission evincing; a serious disregard of consequences of a magnitude constituting a clear and present danger to an individual patient's health, welfare, and safety.

(a) "Physical neglect" means physical or material deprivation, such as lack of medical care, lack of supervision necessary for patient level of development, inadequate food, clothing, or cleanliness.

(b) "Emotional neglect" means acts such as rejection, lack of stimulation, or other acts of commission or omission which may result in emotional or behavioral problems, physical manifestations, and disordered development.

(29) "Neonate" or "newborn" means a newly born infant under twenty-eight days of age.

(30) "Neonatologist" means a pediatrician who is board certified in neonatal-perinatal medicine or board eligible in neonatal-perinatal medicine, provided the period of eligibility does not exceed three years, as defined and described in *Directory of Residency Training Programs* by the Accreditation Council for Graduate Medical Education, American Medical Association, 1998 or the *American Osteopathic Association Yearbook and Directory*, 1998.

(31) "New construction" means any of the following:

(a) New facilities to be licensed as a hospital;

(b) Alterations.

(32) "Nonambulatory" means an individual physically or mentally unable to walk or traverse a normal path to safety without the physical assistance of another.

(33) "Operating room (OR)" means a room within the surgical department intended for invasive and noninvasive procedures requiring anesthesia.

(34) "Patient" means an individual receiving (or having received) preventive, diagnostic, therapeutic, rehabilitative, maintenance, or palliative health services at the hospital.

(35) "Person" means any individual, firm, partnership, corporation, company, association, or joint stock association, and the legal successor thereof.

(36) "Pharmacist" means an individual licensed by the state board of pharmacy to engage in the practice of pharmacy under the provisions of chapter 18.64 RCW as now or hereafter amended.

(37) "Pharmacy" means the central area in a hospital where drugs are stored and are issued to hospital departments or where prescriptions are filled.

(38) "Physician" means an individual licensed under provisions of chapter 18.71 RCW, Physicians, chapter 18.22 RCW, Podiatric medicine and surgery, or chapter 18.57 RCW, Osteopathy—Osteopathic medicine and surgery.

(39) "Prescription" means an order for drugs or devices issued by a practitioner duly authorized by law or rule in the state of Washington to prescribe drugs or devices in the course of his or her professional practice for a legitimate medical purpose.

(40) "Procedure" means a particular course of action to relieve pain, diagnose, cure, improve, or treat a patient's condition.

(41) "Protocols" and "standing order" mean written descriptions of actions and interventions for implementation by designated hospital personnel under defined circumstances and authenticated by a legally authorized person under hospital policy and procedure.

(42) "Psychiatric service" means the treatment of patients pertinent to the psychiatric diagnosis whether or not the hospital maintains a psychiatric unit.

(43) "Recovery unit" means a special physical and functional area for the segregation, concentration, and close or continuous nursing observation and care of patients for a period of less than twenty-four hours immediately following anesthesia, obstetrical delivery, surgery, or other diagnostic or treatment procedures which may produce shock, respiratory obstruction or depression, or other serious states.

(44) "Registered nurse" means an individual licensed under the provisions of chapter 18.79 RCW and practicing in accordance with the rules and regulations promulgated thereunder.

(45) "Restraint" means any method used to prevent or limit free body movement including, but not limited to, involuntary confinement, an apparatus, or a drug given not required to treat a patient's medical symptoms.

(46) "Room" means a space set apart by floor-to-ceiling partitions on all sides with proper access to a corridor and with all openings provided with doors or windows.

(47) "Seclusion room" means a small, secure room specifically designed and organized for temporary placement, care, and observation of one patient and for an environment with minimal sensory stimuli, maximum security and protection, and visual observation of the patient by authorized personnel and staff. Doors of seclusion rooms are provided with staff-controlled locks.

(48) "Sexual assault" has the same meaning as in RCW 70.125.030.

(49) "Staff" means paid employees, leased or contracted persons, students, and volunteers.

(50) "Surgical procedure" means any manual or operative procedure performed upon the body of a living human being for the purpose of preserving health, diagnosing or curing disease, repairing injury, correcting deformity or defect, prolonging life or relieving suffering, and involving any of the following:

(a) Incision, excision, or curettage of tissue or an organ;

(b) Suture or other repair of tissue or an organ including a closed as well as an open reduction of a fracture;

(c) Extraction of tissue including the premature extraction of the products of conception from the uterus; or

(d) An endoscopic examination with use of anesthetizing agents.

(51) "Surrogate decision-maker" means an individual appointed to act on behalf of another. Surrogates make decisions only when an individual is without capacity or has given permission to involve others.

(52) "Treatment" means the care and management of a patient to combat, improve, or prevent a disease, disorder, or injury, and may be:

(a) Pharmacologic, surgical, or supportive;

(b) Specific for a disorder; or

(c) Symptomatic to relieve symptoms without effecting a cure.

(53) "Victim of sexual assault" means a person who alleges or is alleged to have been sexually assaulted and who presents as a patient.

[Statutory Authority: Chapter 70.41 RCW. 08-14-023, § 246-320-010, filed 6/20/08, effective 7/21/08. Statutory Authority: RCW 70.41.350 and 70.41.-030. 04-11-057, § 246-320-010, filed 5/17/04, effective 6/17/04. Statutory Authority: RCW 70.41.030 and 43.70.040. 99-04-052, § 246-320-010, filed 1/28/99, effective 3/10/99.]

WAC 246-320-025 On-site licensing survey. The purpose of this section is to provide annual on-site survey requirements in accordance with chapter 70.41 RCW.

(1) The department will:

(a) Conduct at least one on-site licensing survey each calendar year to determine compliance with the provisions in chapter 70.41 RCW and this chapter;

(b) Notify the hospital in writing of state survey findings;

(c) Contact the hospital to discuss the findings of an on-site licensing or joint commission on accreditation of health care organizations (JCAHO) survey when appropriate; and

(d) Not conduct the annual on-site licensing survey when requested by a hospital accredited by JCAHO in accordance with subsections (2) and (3) of this section.

(2) A hospital accredited by the JCAHO may request exclusion from an annual on-site licensing survey during the year of the JCAHO survey. To request exclusion, a hospital must submit to the department:

(a) A written request asking to be excluded from the annual on-site licensing survey during the calendar year in which the hospital will be surveyed by the JCAHO;

(b) The written request at least thirty days prior to the beginning of the calendar year for which the exclusion from an annual on-site licensing survey will be made;

(c) Verification of current JCAHO accreditation; and

(d) A copy of the decisions and findings of the JCAHO survey within thirty days of receipt of the final JCAHO survey report.

(3) The department will grant an exclusion from the annual on-site licensing survey when:

(a) The hospital:

(i) Meets the requirements in subsection (2) of this section; and

(ii) Verifies current JCAHO accreditation;

(b) The department determines the JCAHO survey standards used at the time of the JCAHO survey exceed or are substantially equivalent to chapter 70.41 RCW and this chapter.

(4) A hospital excluded from an annual on-site licensing survey in accordance with this section:

(a) Is not subject to an annual on-site licensing survey during the calendar year the hospital is surveyed by the JCAHO and for twelve months after the date of the JCAHO survey; and

(b) Must notify the department in writing of any changes in JCAHO accreditation status within ten days of receipt of the accreditation report from the JCAHO.

[Statutory Authority: RCW 70.41.030 and 43.70.040. 99-04-052, § 246-320-025, filed 1/28/99, effective 3/10/99.]

WAC 246-320-045 Application for license—License expiration dates—Notice of decision—Adjudicative proceeding. The purpose of this section is to ensure hospitals are licensed in accordance with chapter 70.41 RCW.

(1) An applicant not currently licensed must submit to the department an application for licensure and applicable fee in accordance with RCW 70.41.100.

(2) The department will, prior to issuing an initial license, verify compliance with the provisions of chapter 70.41 RCW and this chapter which include, but are not limited to:

(a) Approval of construction documents;

(b) Receipt of a certificate of need as provided in chapter 70.38 RCW;

(c) Compliance with local codes and ordinances, including approval to occupy; and

(d) Conducting an on-site licensing survey in accordance with WAC 246-320-025.

(3) The licensed hospital must submit to the department:

(a) No later than November 30 of each calendar year, an application for licensure or verification of license information and applicable fee in accordance with RCW 70.41.100; and

(b) An application addendum indicating any changes to the information previously provided.

(4) The department will issue hospital licenses initially and reissue hospital licenses as often thereafter as necessary each calendar year so as to cause approximately one-third of the total number of hospital licenses to expire on the last day of the calendar year. Licenses issued pursuant to this chapter may be valid for any period not to exceed thirty-six months.

(5) The department may issue a provisional license to permit the operation of the hospital for a period of time to be determined by the department if there is failure to comply with the provisions of chapter 70.41 RCW or this chapter.

(6) The department may deny, suspend, modify, or revoke a license in any case in which it finds that there has been a failure or refusal to comply with the requirements of chapter 70.41 RCW or this chapter.

(a) The department's notice of a denial, suspension, modification, or revocation of a license will be consistent with RCW 43.70.115. An applicant or license holder has the right to an adjudicative proceeding to contest a license decision.

(b) A license applicant or holder contesting a department license decision will within twenty-eight days of receipt of the decision:

(i) File a written application for an adjudicative proceeding by a method showing proof of receipt with the office of the Adjudicative Clerk, Department of Health, PO Box 47879, Olympia, WA 98504-7879; and

(ii) Include in or with the application:

(A) A specific statement of the issue or issues and law involved;

(B) The grounds for contesting the department decision; and

(C) A copy of the contested department decision.

(c) The proceeding is governed by the Administrative Procedure Act chapter 34.05 RCW, this chapter, and chapters 246-08 and 246-10 WAC. If a provision in this chapter conflicts with chapter 246-08 or 246-10 WAC, the provision in this chapter governs.

[Statutory Authority: RCW 70.41.030 and 43.70.040. 99-04-052, § 246-320-045, filed 1/28/99, effective 3/10/99.]

WAC 246-320-065 Exemptions, alternative methods, and interpretations. The purpose of this section is to provide hospitals a mechanism to request an interpretation, exemption, or approval to use an alternative method. The provisions of this chapter are not intended to prevent use of any systems, materials, alternate design, or methods of construction as alternatives to those prescribed by these rules.

(1) A hospital requesting exemption from the provisions of this chapter must submit a written request to the department asking for an exemption. The request must specify the section or sections, explain the reason for the exemption and, when appropriate, include supporting documentation.

(2) A hospital requesting approval for use of alternative materials, design, and methods must submit a written request to the department asking for approval to use an alternative. The request must explain the reason(s) for the use of an alternative and must be supported by technical documentation.

(3) The department may:

(a) Exempt a hospital from complying with portions of this chapter when:

(i) The hospital complies with subsection (1) of this section.

(ii) After review and consideration, such exemption will not:

(A) Negate the purpose and intent of these rules;

(B) Place the safety or health of the patients in the hospital in jeopardy;

(C) Lessen any fire and life safety or infection control provision of other codes or regulations; and

(D) Effect any structural integrity of the building;

(b) Approve the use of alternative materials, designs, and methods when:

(i) The hospital complies with subsection (2) of this section; and

(ii) After review and consideration, such alternative:

(A) Meets the intent and purpose of these rules; and

(B) Is at least equivalent to the methods prescribed in these rules.

(4) A hospital requesting an interpretation of a rule or regulation contained in this chapter must submit a written request to the department. The request must specify the section or sections for which an interpretation is needed and details of the circumstances to which the rule is being applied. The hospital must provide any other information the department deems necessary.

(5) The department will, in response to a written request, send a written interpretation of a rule or regulation within thirty calendar days after the department has received complete information relevant to the requested interpretation.

(6) The department and hospital will keep a copy of each exemption or alternative granted or interpretation issued pursuant to the provisions of this section on file and available at all times.

[Statutory Authority: RCW 70.41.030 and 43.70.040. 99-04-052, § 246-320-065, filed 1/28/99, effective 3/10/99.]

WAC 246-320-085 Single license to cover two or more buildings—When permissible. The purpose of this section is to allow a single hospital license to cover more than one building.

The department may issue a single hospital license to include two or more buildings, provided:

(1) The applicant or hospital:

(a) Meets the licensure requirements of chapter 70.41 RCW and this chapter; and

(b) Operates the multiple buildings as a single integrated system with:

(i) Governance by a single authority or body over all buildings or portions of buildings under the single license; and

(ii) A single medical staff for all hospital facilities under the single license;

(2) The hospital arranges for safe, appropriate, and adequate transport of patients between buildings.

[Statutory Authority: RCW 70.41.030 and 43.70.040. 99-04-052, § 246-320-085, filed 1/28/99, effective 3/10/99.]

WAC 246-320-105 Criminal history, disclosure, and background inquiries. The purpose of this section is to ensure criminal history background inquiries are conducted for any employee or prospective employee who has or will have unsupervised access to children, vulnerable adults, and developmentally disabled adults.

(1) Hospitals will:

(a) Require a disclosure statement as specified under RCW 43.43.834 for each prospective employee, volunteer, contractor, student, and any other person associated with the licensed hospital having unsupervised access to:

(i) Children under sixteen years of age;

(ii) Vulnerable adults as defined under RCW 43.43.830; and

(iii) Developmentally disabled individuals;

(b) Require a Washington state patrol background inquiry as specified in RCW 43.43.834 for each prospective employee, volunteer, contractor, student, and any other person applying for association with the licensed hospital prior to allowing the person unsupervised access to:

(i) Children under sixteen years of age;

(ii) Vulnerable adults as defined under RCW 43.43.830; and

(iii) Developmentally disabled individuals.

(2) The department will:

(a) Review records required under this section;

(b) Investigate allegations of noncompliance with RCW 43.43.830 through 43.43.842, when necessary, in consultation with law enforcement personnel; and

(c) Use information collected under this section solely for the purpose of determining eligibility for licensure or relicensure as required under RCW 43.43.842.

(3) The department may require the hospital to complete additional disclosure statements or background inquiries, if the department has reason to believe that offenses specified under RCW 43.43.830 have occurred since completion of the previous disclosure statement or background inquiry, for any person associated with the licensed facility having unsupervised access to:

(a) Children under sixteen years of age;

(b) Vulnerable adults as defined under RCW 43.43.830; and

(c) Developmentally disabled individuals.

[Statutory Authority: RCW 70.41.030 and 43.70.040. 99-04-052, § 246-320-105, filed 1/28/99, effective 3/10/99.]

WAC 246-320-125 Governance. The purpose of the governance section is to provide organizational guidance and oversight and to ensure resources and staff to support safe and adequate patient care.

The governing authority will:

(1) Adopt and periodically review bylaws which address legal accountabilities and responsibilities. Bylaws will provide for medical staff communication and conflict resolution with the governing authority;

(2) Establish and review governing authority policies, promote performance improvement, and provide for organizational management and planning;

(3) Establish a process for selecting and periodically evaluating a chief executive officer;

(4) Establish and appoint a medical staff; and

(5) Approve bylaws, rules, and regulations as adopted by the medical staff before they can become effective.

[Statutory Authority: RCW 70.41.030 and 43.70.040. 99-04-052, § 246-320-125, filed 1/28/99, effective 3/10/99.]

WAC 246-320-145 Leadership. The purpose of the leadership section is to ensure care is provided consistently throughout the hospital and in accordance with patient and community needs.

The hospital leaders will:

(1) Design hospital-wide patient care services and define department specific scope of services appropriate to the scope and level of care required by the patients served and resources available; and

(a) Approve the scope of service of each department;

(b) Integrate and coordinate patient care services; and

(c) Provide for the uniform performance of patient care processes;

(2) Ensure all patients have access to safe and appropriate care;

(3) Establish and implement processes for:

(a) Gathering, assessing and acting on information regarding patient and family satisfaction with the services provided; and

(b) Complaint resolution for patients, families, employees, providers and others;

(4) Plan, promote, and conduct organization-wide performance-improvement activities to provide effective leadership and coordinated delivery of patient care;

(5) Ensure clinical services are provided in a timely manner;

(6) Ensure nursing policies and procedures, nursing standards of patient care, and standards of nursing practices are established and approved by the nurse executive or a designee(s), and nursing services are directed by:

(a) A nurse executive; or

(b) An identified registered nurse leader on a team to function at the executive level;

(7) Determine who has the authority to establish and approve hospital policies;

(8) Ensure individuals conducting business in the hospital comply with hospital policies and procedures;

(9) Adopt and implement policies and procedures in accordance with chapter 26.44 RCW to ensure suspected abuse to a child, adult dependent or developmentally disabled person is reported within one administrative day to:

(a) Local police or appropriate law enforcement agency;

(b) The department of health; or

(c) Other state agencies as appropriate;

(10) Notify the department whenever any of the following events have been confirmed to have occurred:

(a) An unanticipated death or major permanent loss of function, not related to the natural course of a patient's illness or underlying condition;

(b) A patient suicide while the patient was under care in the hospital;

(c) An infant abduction or discharge to the wrong family;

(d) Sexual assault or rape of a patient or staff member while in the hospital;

(e) A hemolytic transfusion reaction involving administration of blood or blood products having major blood group incompatibilities;

(f) Surgery performed on the wrong patient or wrong body part;

(g) A failure or major malfunction of a facility system such as the heating, ventilation, fire alarm, fire sprinkler,

electrical, electronic information management, or water supply which affects any patient diagnosis, treatment, or care service within the facility; or

(h) A fire which affects any patient diagnosis, treatment, or care area of the facility.

(11) Provide notification to the department as required in subsection (10) of this section within two administrative business days of hospital leaders learning of the confirmed event. The hospital is encouraged to confirm these events through a review or assessment by the hospital quality improvement or risk management processes. Each notice to the department:

(a) Must include:

(i) The hospital's name;

(ii) The type of event which is being reported from subsection (10) of this section; and

(iii) The date the event occurred;

(b) Will allow the department to be informed of events which in the interest of the public will be reviewed to determine if the department must either conduct an investigation or review the event during the next regularly scheduled onsite licensing survey;

(c) Will be confidentially maintained by the department, in accordance with the protections of the Public Disclosure Act, chapter 42.17 RCW, and other applicable laws and reporting requirements provided in RCW 70.41.150, 70.41.200, and 70.41.210; and

(d) Does not relieve a hospital from complying with any other applicable reporting or notification requirements, such as those relating to law enforcement or professional regulatory agencies.

[Statutory Authority: RCW 70.41.030 and 43.70.040. 99-04-052, § 246-320-145, filed 1/28/99, effective 3/10/99.]

WAC 246-320-165 Management of human resources. The purpose of the management of human resources section is to ensure the hospital provides competent staff consistent with scope of services.

Hospitals will:

(1) Establish, review, and update written job descriptions for each job classification;

(2) Conduct periodic staff performance reviews;

(3) Ensure qualified and competent staff are available to operate each department;

(4) Ensure supervision of staff;

(5) Document verification of current staff licensure, certification, or registration;

(6) Complete tuberculosis screening for new and current employees consistent with the *Guidelines for Preventing the Transmission of Mycobacterium Tuberculosis in Healthcare Facilities*, 2005. *Morbidity Mortality Weekly Report* (MMWR) Volume 54, December 30, 2005;

(7) Provide orientation to the work environment;

(8) Provide information on infection control to staff upon hire and annually which includes:

(a) Education on general infection control in accordance with WAC 296-62-08001 bloodborne pathogens exposure control; and

(b) General and department specific infection control measures related to the work of each department in which the staff works; and

(9) Establish and implement an education plan that verifies or arranges for the appropriate education and training of staff on prevention, transmission, and treatment of human immunodeficiency virus (HIV) and acquired immunodeficiency syndrome (AIDS) consistent with RCW 70.24.310.

[Statutory Authority: Chapter 70.41 RCW. 08-14-023, § 246-320-165, filed 6/20/08, effective 7/21/08. Statutory Authority: RCW 70.41.030 and 43.70.040. 99-04-052, § 246-320-165, filed 1/28/99, effective 3/10/99.]

WAC 246-320-185 Medical staff. The purpose of the medical staff section is to contribute to a safe and adequate patient care environment through the development of a medical staff structure and mechanisms to assure consistent clinical competence.

The hospital medical staff will:

(1) Adopt medical staff bylaws, rules, and regulations that define the medical staff, the organizational structure of the medical staff and address:

(a) Qualifications for membership;

(b) Verification of application data;

(c) Appointment process;

(d) Reappointment process;

(e) The length of appointment and reappointment;

(f) Process for granting of delineated clinical privileges;

(g) Provision for continuous care of patients;

(h) Assessment of credentialed practitioner's performance; and

(i) Due process;

(2) Include licensed physicians and may include other individuals granted privileges by the governing authority to provide patient care services; and

(3) Forward recommendations for membership, initial, renewed, or revised clinical privileges, in accordance with the bylaws, rules and regulations, and policies of the medical staff to the governing authority for action.

[Statutory Authority: RCW 70.41.030 and 43.70.040. 99-04-052, § 246-320-185, filed 1/28/99, effective 3/10/99.]

WAC 246-320-205 Management of information. The purpose of the management of information section is to obtain, manage, and use information to improve patient outcomes and the performance of the hospital in patient care, governance, management, and support services.

Hospitals will:

(1) Facilitate patient care by providing medical staff and other practitioners timely access to information systems, resources, and services;

(2) Maintain confidentiality, security, and integrity of data and information;

(3) Initiate and maintain a medical record for every individual assessed or treated including a process to review records for completeness, accuracy, and timeliness. Medical records must:

(a) Contain information to identify the patient, the patient's clinical data to support the diagnosis, course and results of treatment, author identification, consent documents, and promote continuity of care;

(b) Be accurately written, dated, timed, promptly filed, retained in accordance with RCW 70.41.190 and chapter 5.46 RCW, and accessible;

(c) Indicate:

(i) The legally authorized practitioner authenticated the medical record after the record was transcribed; and

(ii) Entries are dated and authenticated in a timely manner;

(d) Include verbal orders by authorized individuals which are accepted and transcribed by qualified personnel;

(4) Establish a systematic method for identifying each medical record(s) to allow ready identification of area of service, filing, and retrieval of all the patient's record(s); and

(5) Adopt and implement policies and procedures that address:

(a) Access to and release of confidential data in medical records in accordance with chapter 70.02 RCW; and

(b) Transmittal of pertinent medical data to ensure continuity of care.

[Statutory Authority: RCW 70.41.030 and 43.70.040. 99-04-052, § 246-320-205, filed 1/28/99, effective 3/10/99.]

WAC 246-320-225 Improving organizational performance. The purpose of the improving organizational performance section is to ensure that performance improvement activities of staff, medical staff, and outside contractors result in continuous improvement of patient health outcomes.

Hospitals will:

(1) Have a hospital-wide approach to process design and performance measurement, assessment, and improvement of patient care services in accordance with RCW 70.41.200 and including, but not limited to:

(a) A written performance improvement plan that is periodically evaluated and approved by the governing authority;

(b) Performance improvement activities which are collaborative and interdisciplinary and include at least one member of the governing authority; and

(c) Review of serious or undesirable patient outcomes in a timely manner;

(2) Systematically collect and assess data on important processes or outcomes related to patient care and organization functions. The hospital must prioritize and take appropriate action to improve and/or continue measurement in response to data assessment. The hospital will collect and assess data including, but not limited to:

(a) Processes or outcomes related to:

(i) Operative, other invasive, and noninvasive procedures that place patients at risk;

(ii) Infection rates;

(iii) Mortality;

(iv) Medication use;

(v) Hospital incurred injuries, such as, but not limited to, falls and restraint use;

(vi) Events listed in WAC 246-320-145 (10)(a) through (f);

(vii) Discrepancies or patterns of discrepancies between preoperative and postoperative (including pathologic) diagnosis, including those identified during the pathologic review of specimens removed during surgical or invasive procedures;

(viii) Significant adverse drug reactions (as defined by the hospital);

(ix) Confirmed transfusion reactions;

(x) Adverse events or patterns of adverse events during anesthesia use; and

(xi) Other hospital specific measurements;

(b) The needs, expectations, and satisfaction of patients; and

(c) Quality control and risk management activities.

[Statutory Authority: RCW 70.41.030 and 43.70.040. 99-04-052, § 246-320-225, filed 1/28/99, effective 3/10/99.]

WAC 246-320-245 Patient rights and organizational ethics. The purpose of the patient rights and organizational ethics section is to help improve patient outcomes by respecting each patient and conducting all relationships with patients and the public in an ethical manner.

Hospitals will:

(1) Provide patients with a written statement of patients rights;

(2) Respect, inform, and support a patient's right to treatment and service by adopting and implementing policies and procedures that:

(a) Ensure the patient's right to:

(i) Confidentiality, privacy, security, complaint resolution, spiritual care, and communication. If communication restrictions are necessary for patient care and safety, they are documented and explained to the patient and family;

(ii) Access protective services; and

(iii) Be involved in all aspects of their care including:

(A) Their right to refuse care and treatment; and

(B) Resolving dilemmas about care decisions;

(b) Result in:

(i) Obtaining informed consent;

(ii) Participation of family in care decisions when appropriate;

(c) Address ethical issues in patient care, including:

(i) Obtaining and honoring advance directives;

(ii) Withholding resuscitative services and forgoing or withdrawing life-sustaining treatment; and

(iii) Providing care at the end of life;

(d) Ensure procurement and donation of organs and other tissues, if done, is in accordance with RCW 68.50.500 and 68.50.560, medical staff input and family/surrogate decision-makers direction;

(e) Address research, investigation, and clinical trials including:

(i) Internal procedures to authorize the research;

(ii) Assurance that practitioners follow informed consent laws; and

(iii) Assurance that if the patient refuses to participate, their refusal will not compromise their access to services.

[Statutory Authority: RCW 70.41.030 and 43.70.040. 99-04-052, § 246-320-245, filed 1/28/99, effective 3/10/99.]

WAC 246-320-265 Infection control program. The purpose of the infection control program section is to identify and reduce the risk of acquiring and transmitting nosocomial infections and communicable diseases between patients, employees, medical staff, volunteers, and visitors.

Hospitals must develop and implement an infection control program and will:

(1) Designate a member or members of the staff to:

(a) Oversee, review, evaluate, and approve the activities of the infection control program and the infection control aspects of appropriate hospital policies and procedures; and

(b) Provide consultation;

(2) Assure staff managing the infection control program have:

(a) Documented evidence of a minimum of two years experience in a health related field; and

(b) Training in the principles and practices of infection control;

(3) Adopt and implement written policies and procedures consistent with the published guidelines of the centers for disease control and prevention (CDC) regarding infection control in hospitals, to guide the staff. Where appropriate, policies and procedures are specific to the service area and address:

(a) Receipt, use, disposal, processing, or reuse of hospital and nonhospital equipment to assure prevention of disease transmission;

(b) Prevention of cross contamination between soiled and clean items during sorting, processing, transporting, and storage;

(c) Environmental management and housekeeping functions, including:

(i) The process for approval of disinfectants, sanitation procedures, and equipment;

(ii) Cleaning areas used for surgical procedures as appropriate, before, between, and after cases;

(iii) General hospital-wide daily and periodic cleaning; and

(iv) A laundry and linen system that will ensure:

(A) The supply of linen/laundry is adequate to meet the needs of the hospital and patients; and

(B) Standards used for processing linens assure that clean linen/laundry is free of toxic residues and within industry standard pH range(s);

(d) Occupational health consistent with current practice;

(e) Attire;

(f) Traffic patterns;

(g) Antisepsis and handwashing;

(h) Scrub technique and surgical preparation;

(i) Biohazardous waste management in accordance with applicable federal, state, and local regulations;

(j) Barrier and transmission precautions; and

(k) Pharmacy and therapeutics; and

(4) Establish and implement a plan for:

(a) Public health coordination, including a system for reporting communicable diseases in accordance with chapter 246-100 WAC Communicable and certain other diseases; and

(b) Surveillance and investigation consistent with WAC 246-320-225 Improving organizational performance.

[Statutory Authority: Chapter 70.41 RCW. 08-14-023, § 246-320-265, filed 6/20/08, effective 7/21/08. Statutory Authority: RCW 70.41.030 and 43.70.-040. 99-04-052, § 246-320-265, filed 1/28/99, effective 3/10/99.]

WAC 246-320-285 Pharmacy services. The purpose of the pharmacy services section is to assure that patient pharmaceutical needs are met in a planned and organized manner.

Hospitals must meet the requirements in chapter 246-873 WAC board of pharmacy, and will:

(1) Prepare, dispense, and administer medications in accordance with current law, regulation, licensure, and professional standards of practice;

(2) Assure medication use processes are organized and systematic throughout the hospital under direction of a pharmacist and coordinated with the medical staff;

(3) Have a process for selection of medications based on objective evaluation of their relative therapeutic merits, safety, and cost; and

(4) Adopt and implement policies and procedures that support safe storing, handling, managing, controlling, prescribing, dispensing, and administering medications in accordance with chapter 246-873 WAC board of pharmacy and address:

(a) Prescribing and procuring medications not available on-site;

(b) Ensuring prescriptions or orders are verified and patients are identified before medication is administered; and

(c) Ensuring medication effects on patients are monitored and documented.

[Statutory Authority: RCW 70.41.030 and 43.70.040. 99-04-052, § 246-320-285, filed 1/28/99, effective 3/10/99.]

WAC 246-320-305 Food and nutrition services. The purpose of the food and nutrition services section is to assure that patients nutritional needs are met in a planned and organized manner.

Hospitals will:

(1) Designate an individual who is qualified by experience, education, or training to be responsible for management of food and nutrition services;

(2) Designate a registered dietitian to be responsible for policies and procedures which address providing adequate nutritional care for patients;

(3) Have a registered dietitian who is available to assess nutritional status and plan, when indicated by a patient's individual nutritional risk screen;

(4) Develop and regularly update an interdisciplinary plan for medical nutritional therapy based on current standards for patients at nutritional risk. Monitor and document each patient's response to the medical nutritional therapy plan in the medical record;

(5) Provide meals and document, implement, and monitor a system to assure meals are nutritionally balanced, planned in advance, and respect patient's cultural diversity; and

(6) Adopt and implement policies and procedures to assure that food service complies with chapter 246-215 WAC Food service.

[Statutory Authority: RCW 70.41.030 and 43.70.040. 99-04-052, § 246-320-305, filed 1/28/99, effective 3/10/99.]

WAC 246-320-325 Laboratory, imaging, and other diagnostic, treatment or therapeutic services. Hospitals will:

(1) If providing laboratory services, adopt and implement policies and procedures which require availability of pathology and clinical laboratory services on a timely basis and reflect accepted standards of care for those services;

(2) If providing imaging services, adopt and implement policies and procedures which reflect accepted standards of care for that service; and

(3) If providing other diagnostic, treatment or therapeutic services, adopt and implement policies and procedures which reflect accepted standards of care for those services.

[Statutory Authority: RCW 70.41.030 and 43.70.040. 99-04-052, § 246-320-325, filed 1/28/99, effective 3/10/99.]

WAC 246-320-345 Inpatient care services. The purpose of the inpatient care services section is to guide the development of the plan for patient care. This is accomplished by ensuring availability of materials and resources and through establishing, monitoring, and enforcing policies and procedures that promote the delivery of quality health care.

Hospitals will:

(1) Provide sufficient and appropriate personnel, space, equipment, reference materials, and supplies for the care and treatment of patients;

(2) Have a registered nurse in the hospital at all times and available for consultation;

(3) Have a mechanism to plan and document care that is provided in an interdisciplinary and collaborative manner, including:

(a) Development of an individualized patient plan of care, when appropriate; and

(b) Periodic review and revision based on reassessment of patient condition;

(4) Adopt and implement patient care policies and procedures that are designed to guide personnel, and review periodically, and revise as necessary to reflect current practice;

(5) Have patient care policies and procedures which address:

(a) Criteria for admission of patients to general and specialized patient care service areas;

(b) Reliable method for personal identification of each patient;

(c) Conditions that require transfer of patients within the facility to specialized patient care areas and to outside facilities;

(d) Identifying potential patients who are organ and/or tissue donors;

(e) Patient safety measures;

(f) Staff access to patient areas;

(g) Use of restraints;

(h) Patient care orders, including:

(i) Who can give and receive orders as defined by the hospital and consistent with professional licensing laws;

(ii) Written orders authenticated by a legally authorized practitioner for all drugs, intravenous solutions, blood, medical treatments, and nutrition; and

(iii) Authentication of orders in a timely manner;

(i) Use of preestablished patient care guidelines or protocols. When used, they must be documented in the medical record and preapproved or authenticated by an authorized practitioner;

(j) Care and handling of persons whose conditions require special medical or medical-legal consideration;

(k) Medications meeting requirements in chapter 246-873 WAC board of pharmacy and WAC 246-320-285 Pharmacy services;

(l) A hospital-approved procedure for double checking certain drugs, biologicals, and agents by appropriately licensed personnel;

(m) Emergency drugs, including:

(i) Immediate access; and

(ii) Dosages appropriate to the patient population;

(n) Preparation and administration of intravenous solutions, medications, and admixtures developed under the direction of a pharmacist;

(o) Preparation and administration of blood and blood products;

(p) Anesthesia services; and

(q) Discharge planning;

(6) Complete and document:

(a) An initial assessment of each patient's physical condition, emotional, and social needs. The assessment is based upon the patient's diagnosis, care setting, desire for care, response to any previous treatment, consent to treatment, and education needs. Initial assessment includes:

(i) Patient history and physical assessment;

(ii) Current needs;

(iii) Need for discharge planning; and

(iv) Immunization status for pediatric patients;

(b) Current physical examination, within thirty days prior to admission, with update as needed by an authorized practitioner on a timely basis if patient status has changed;

(c) Additional specialized assessments when warranted by the patient's condition or needs, including:

(i) Nutritional status;

(ii) Functional status; and

(iii) Social, psychological, and/or physiological status;

(d) Reassessments in accordance with plan of care and patient's condition; and

(e) Discharge plans when appropriate, coordinated with:

(i) Inpatient and family or caregiver as appropriate; and

(ii) Receiving agency or agencies, when necessary.

[Statutory Authority: RCW 70.41.030 and 43.70.040. 99-04-052, § 246-320-345, filed 1/28/99, effective 3/10/99.]

WAC 246-320-365 Specialized patient care services. The purpose of the specialized patient care services section is to guide the development of the plan for patient care. This is accomplished by ensuring availability of materials and resources and through establishing, monitoring, and enforcing policies and procedures that promote the delivery of quality health care in specialized patient care areas.

Hospitals will:

(1) Meet the requirements in Inpatient care services, WAC 246-320-345;

(2) Adopt and implement policies and procedures which address accepted standards of care for each specialty service;

(3) Assure physician oversight for each specialty service by a physician with experience in those specialized services;

(4) Assure staff for each nursing service area are supervised by a registered nurse who provides a leadership role to plan, provide, and coordinate care;

(5) If providing surgery and interventional services:

(a) Adopt and implement policies and procedures that address appropriate access:

(i) To areas where invasive procedures are performed; and

(ii) To information regarding practitioner's delineated privileges for operating room staff;

(b) Provide:

(i) Emergency equipment, supplies, and services available in a timely manner and appropriate for the scope of service; and

(ii) Separate refrigerated storage equipment with temperature alarms, when blood is stored in the surgical department;

(6) If providing a post anesthesia recovery unit (PACU), adopt and implement written policies and procedures requiring:

(a) The availability of an authorized practitioner in the facility capable of managing complications and providing cardiopulmonary resuscitation for patients when patients are in the PACU; and

(b) The immediate availability to the PACU of a registered nurse trained and current in advanced cardiac life support measures;

(7) If providing obstetrical services:

(a) Have capability to perform cesarean sections twenty-four hours per day; or

(b) Meet the following criteria when the hospital does not have twenty-four hour cesarean capability:

(i) Limit planned obstetrical admissions to "low risk" obstetrical patients as defined in WAC 246-329-010(13) childbirth centers;

(ii) Inform each obstetrical patient in writing, prior to the planned admission, of the hospital's limited obstetrical services as well as the transportation and transfer agreements;

(iii) Maintain current written agreements for adequately staffed ambulance and/or air transport services to be available twenty-four hours per day; and

(iv) Maintain current written agreements with another hospital to admit the transferred obstetrical patients;

(c) Ensure one licensed nurse trained in neonatal resuscitation is in the hospital when infants are present;

(8) If providing an intermediate care nursery, have nursing, laboratory, pharmacy, radiology, and respiratory care services appropriate for infants:

(a) Available in a timely manner; and

(b) In the hospital during assisted ventilation;

(c) Ensure one licensed nurse trained in neonatal resuscitation is in the hospital when infants are present;

(9) If providing a neonatal intensive care nursery, have:

(a) Nursing, laboratory, pharmacy, radiology, and respiratory care services appropriate for neonates available in the hospital at all times;

(b) An anesthesia practitioner, neonatologist, and a pharmacist on call and available in a timely manner twenty-four hours a day; and

(c) One licensed nurse trained in neonatal resuscitation in the hospital when infants are present;

(10) If providing a critical care unit or services, have:

(a) At least two licensed nursing personnel skilled and trained in care of critical care patients on duty in the hospital at all times when patients are present, and:

(i) Immediately available to provide care to patients admitted to the critical care area; and

(ii) Trained and current in cardiopulmonary resuscitation including at least one registered nurse with:

(A) Training in the safe and effective use of the specialized equipment and procedures employed in the particular area; and

(B) Successful completion of an advanced cardiac life support training program; and

(b) Laboratory, radiology, and respiratory care services available in a timely manner;

(11) If providing an alcoholism and/or chemical dependency unit or services:

(a) Adopt and implement policies and procedures that address development, implementation, and review of the individualized treatment plan, including the participation of the multidisciplinary treatment team, the patient, and the family, as appropriate;

(b) Ensure provision of patient privacy for interviewing, group and individual counseling, physical examinations, and social activities of patients; and

(c) Provide staff in accordance with WAC 246-324-170(3);

(12) If providing a psychiatric unit or services:

(a) Adopt and implement policies and procedures that address development, implementation, and review of the individualized treatment plan, including the participation of the multidisciplinary treatment team, the patient, and the family, as appropriate;

(b) Ensure provision of patient privacy for interviewing, group and individual counseling, physical examinations, and social activities of patients;

(c) Provide staff in accordance with WAC 246-322-170(3); and

(d) Provide:

(i) Separate patient sleeping rooms for children and adults;

(ii) Access to at least one seclusion room;

(iii) For close observation of patients;

(13) If providing a long-term care unit or services, provide an activities program designed to encourage each long-term care patient to maintain or attain normal activity and achieve an optimal level of independence;

(14) If providing an emergency care unit or services, provide basic, outpatient emergency care including:

(a) Capability to perform emergency triage and medical screening exam twenty-four hours per day;

(b) At least one registered nurse skilled and trained in care of emergency department patients on duty in the hospital at all times, and:

(i) Immediately available to provide care; and

(ii) Trained and current in advanced cardiac life support;

(c) Names and telephone numbers of medical and other staff on call must be posted; and

(d) Communication with agencies as indicated by patient condition;

(15) If providing renal dialysis service:

(a) Meet the *Association for the Advancement of Medical Instrumentation (AAMI) Standards, Dialysis Edition, 2005*:

(i) The cleaning and sterilization procedures if dialyzers are reused;

(ii) Water treatment, if necessary to ensure water quality; and

(iii) Water testing for bacterial contamination and chemical purity;

(b) Test dialysis machine for bacterial contamination monthly or demonstrate a quality assurance program establishing effectiveness of disinfection methods and intervals;

(c) Take appropriate measures to prevent contamination, including backflow prevention in accordance with the state plumbing code;

(d) Provide for the availability of any special dialyzing solutions required by a patient; and

(e) Through a contract provider, that provider must meet the requirements in this section.

[Statutory Authority: Chapter 70.41 RCW. 08-14-023, § 246-320-365, filed 6/20/08, effective 7/21/08. Statutory Authority: RCW 70.41.030 and 43.70.040. 99-04-052, § 246-320-365, filed 1/28/99, effective 3/10/99.]

WAC 246-320-370 Emergency contraception. The purpose of this section is to ensure that all hospitals with emergency rooms provide emergency contraception as a treatment option to any woman who seeks treatment as a result of a sexual assault. Every hospital that provides emergency care must:

Develop and implement policies and procedures regarding the provision of twenty-four-hour/seven-day per week emergency care to victims of sexual assault;

Provide the victim of sexual assault with medically and factually accurate and unbiased written and oral information about emergency contraception;

Orally inform each victim in a language she understands of her option to be provided emergency contraception at the hospital; and

Immediately provide emergency contraception, as defined in WAC 246-320-010, to each victim of sexual assault if the victim requests it, and if the emergency contraception is not medically contraindicated.

[Statutory Authority: RCW 70.41.350 and 70.41.030. 04-11-057, § 246-320-370, filed 5/17/04, effective 6/17/04.]

WAC 246-320-385 Outpatient care services. The purpose of the outpatient care services section is to guide the development of the plan for patient care. This is accomplished by ensuring availability of materials and resources and through establishing, monitoring, and enforcing policies and procedures that promote the delivery of quality health care.

Hospitals will:

(1) Meet requirements in WAC 246-320-345 (1), (3), and (4) inpatient care services;

(2) Assure appropriate physician oversight for outpatient services;

(3) Provide patient services in accordance with a written order or protocol by an authorized practitioner; and

(4) Explain a patient's plan of care, when needed, to the patient, their family, and as appropriate, social network and support system.

[Statutory Authority: RCW 70.41.030 and 43.70.040. 99-04-052, § 246-320-385, filed 1/28/99, effective 3/10/99.]

WAC 246-320-405 Management of environment for care. The purpose of the management of environment for care section is to manage the environmental hazards and risks, prevent accidents and injuries, and maintain safe conditions for patients, visitors, and staff.

(1) The hospital will designate a person or persons responsible to develop, implement, monitor, and follow-up on safety, security, hazardous materials, emergency preparedness, life safety, patient related technology, utility system, and physical plant elements of the management plan.

(2) Safety. The hospital will:

(a) Establish and implement a plan to:

(i) Maintain a physical environment free of hazards; and

(ii) Reduce the risk of injury to patients, staff, and visitors;

(b) Report and investigate safety related incidents and when appropriate correct and/or take steps to avoid reoccurrence in the future; and

(c) Educate and review periodically with staff, policies and procedures relating to safety and job-related hazards.

(3) Security. The hospital will:

(a) Establish and implement a plan to maintain a secure environment for patients, visitors, and staff, including a plan to prevent abduction of patients;

(b) Educate staff on security procedures; and

(c) If they have a designated security staff, assure security staff have a minimum level of training and competency commensurate with their assigned responsibility, as defined by the hospital.

(4) Hazardous materials and waste. The hospital will:

(a) Establish and maintain a program to safely control hazardous materials and waste in accordance with applicable federal, state, and local regulations;

(b) Provide space and equipment for safe handling and storage of hazardous materials and waste;

(c) Investigate all hazardous materials or waste spills, exposures, and other incidents, and report as required to appropriate agency(s);

(d) Educate staff on policies and procedures relating to safe control of hazardous materials and waste.

(5) Emergency preparedness. The hospital will:

(a) Establish and implement a disaster plan designed to meet both internal and external disasters. The plan is:

(i) Specific to the hospital;

(ii) Relevant to the area;

(iii) Internally implementable, twenty-four hours a day, seven days a week; and

(iv) Reviewed and revised periodically;

(b) Ensure the disaster plan identifies:

(i) Who is responsible for each aspect of the plan; and

(ii) Essential and key personnel who would respond to a disaster;

(c) Include in the plan:

(i) Provision for staff education and training; and

(ii) A debriefing and evaluation after each disaster incident or drill.

(6) Life safety. The hospital will:

(a) Establish and implement a plan to maintain a fire-safe environment of care that meets fire protection requirements established by the Washington state patrol, fire protection bureau;

(b) Investigate fire protection deficiencies, failures, and user errors; and

(c) Orient, educate, and drill staff on policies and procedures relating to life safety management and emergencies.

(7) Patient related technologies. The hospital will:

(a) Establish and implement a plan to:

(i) Complete a technical and an engineering review to ensure that patient related technology will function safely and with appropriate building support systems;

(ii) Inventory all patient related technologies that require preventive maintenance;

(iii) Address and document preventive maintenance (PM); and

(iv) Assure quality delivery of service, independent of service vendor or methodology;

(b) Investigate, report, and evaluate procedures in response to system failures; and

(c) Educate staff regarding relevant patient related medical technology.

(8) Utility systems. The hospital will:

(a) Establish and implement a plan to:

(i) Maintain a safe, controlled, comfortable environment;

(ii) Assess and minimize risks of utility system failures, and ensure operational reliability of utility systems;

(iii) Investigate utility systems management problems, failures, or user errors and report incidents and corrective actions; and

(iv) Address and document preventive maintenance (PM);

(b) Educate staff on utility management policies and procedures.

(9) Physical plant. The hospital will provide:

(a) Storage;

(b) Plumbing with:

(i) A water supply providing hot and cold water under pressure which conforms to the quality standards of the department;

(ii) Hot water supplied for bathing and handwashing purposes not exceeding 120°F; and

(iii) The cross connection controls meeting requirements of the state plumbing code;

(c) Ventilation:

(i) To prevent objectionable odors and/or excessive condensation; and

(ii) With air pressure relationships as designed and approved by the department when constructed and maintained within industry standard tolerances;

(d) Clean interior surfaces and finishes;

(e) Functional patient call system.

[Statutory Authority: Chapter 70.41 RCW. 08-14-023, § 246-320-405, filed 6/20/08, effective 7/21/08. Statutory Authority: RCW 70.41.030 and 43.70.-040. 99-04-052, § 246-320-405, filed 1/28/99, effective 3/10/99.]

WAC 246-320-500 Applicability of WAC 246-320-500 through 246-320-600. The purpose of construction regulations is to provide for a safe and effective patient care environment. These rules are not retroactive and are intended to be applied as outlined below.

(1) These regulations apply to hospitals including:

(a) New buildings to be licensed as a hospital;

(b) Conversion of an existing building or portion of an existing building for use as a hospital;

(c) Additions to an existing hospital;

(d) Alterations to an existing hospital; and

(e) Buildings or portions of buildings licensed as a hospital and used for hospital services;

(f) Excluding nonpatient care buildings used exclusively for administration functions.

(2) The requirements of chapter 246-320 WAC in effect at the time the application and fee are submitted to the department, and project number is assigned by the department, apply for the duration of the construction project.

(3) Standards for design and construction.

Facilities constructed and intended for use under this chapter shall comply with:

(a) The following chapters of the 2006 edition of the *Guidelines for Design and Construction of Health Care Facilities* as published by the American Institute of Architects, 1735 New York Avenue, N.W., Washington D.C. 20006, as amended in WAC 246-320-600:

(i) 1.1 Introduction

(ii) 1.2 Environment of Care

(iii) 1.3 Site

(iv) 1.4 Equipment

(v) 1.5 Planning, Design and Construction

(vi) 1.6 Common Requirements

(vii) 2.1 General Hospital

(viii) 2.2 Small Inpatient Primary Care Hospitals

(ix) 2.3 Psychiatric Hospital

(x) 2.4 Rehabilitation Facilities

(xi) 3.1 Outpatient Facilities

(xii) 3.2 Primary Care Outpatient Centers

(xiii) 3.3 Small Primary (Neighborhood) Outpatient Facilities

(xiv) 3.4 Freestanding Outpatient Diagnostic and Treatment Facilities

(xv) 3.5 Freestanding Urgent Care Facilities

(xvi) 3.6 Freestanding Birthing Centers

(xvii) 3.7 Outpatient Surgical Facilities

(xviii) 3.8 Office Surgical Facilities

(xix) 3.9 Gastrointestinal Endoscopy Facilities

(xx) 3.10 Renal Dialysis Centers

(xxi) 3.11 Psychiatric Outpatient Centers

(xxii) 3.12 Mobile, Transportable, and Relocatable Units

(xxiii) 4.2 Hospice Facility

(b) *The National Fire Protection Association, Life Safety Code*, NFPA 101, 2000.

(c) *The State Building Code* as adopted by the state building code council under the authority of chapter 19.27 RCW.

(d) Accepted procedure and practice in cross-contamination control, *Pacific Northwest Edition, 6th Edition, December 1995, American Waterworks Association*.

[Statutory Authority: Chapter 70.41 RCW. 08-14-023, § 246-320-500, filed 6/20/08, effective 7/21/08. Statutory Authority: RCW 70.41.030 and 43.70.-040. 99-04-052, § 246-320-500, filed 1/28/99, effective 3/10/99.]

WAC 246-320-505 Design, construction review, and approval of plans. (1) Drawings and specifications for new construction, excluding minor alterations, must be prepared by or under the direction of, an architect registered under chapter 18.08 RCW. The services of a consulting engineer registered under chapter 18.43 RCW must be used for the various branches of work where appropriate. The services of a registered engineer may be used in lieu of the services of an architect if work involves engineering only.

(2) A hospital will meet the following requirements:

(a) Request and attend a presubmission conference for projects with a construction value of two hundred fifty thousand dollars or more. The presubmission conference shall be scheduled to occur for the review of construction documents that are no less than fifty percent complete.

(b) Submit construction documents for proposed new construction to the department for review within ten days of submission to the local authorities. Compliance with these standards and regulations does not relieve the hospital of the need to comply with applicable state and local building and zoning codes.

(c) The construction documents must include:

(i) A written program containing, but not limited to the following:

(A) Information concerning services to be provided and operational methods to be used;

(B) An interim life safety measures plan to ensure the health and safety of occupants during construction and installation of finishes.

(C) An infection control risk assessment indicating appropriate infection control measures, keeping the surrounding area free of dust and fumes, and ensuring rooms or areas are well ventilated, unoccupied, and unavailable for use until free of volatile fumes and odors;

(ii) Drawings and specifications to include coordinated architectural, mechanical, and electrical work. Each room, area, and item of fixed equipment and major movable equipment must be identified on all drawings to demonstrate that the required facilities for each function are provided; and

(iii) Floor plan of the existing building showing the alterations and additions, and indicating location of any service or support areas; and

(iv) Required paths of exit serving the alterations or additions.

(d) The hospital will respond in writing when the department requests additional or corrected construction documents;

(e) Notify the department in writing when construction has commenced;

(f) Provide the department with a signed form acknowledging the risks if starting construction before the plan review has been completed. The acknowledgment of risks form shall be signed by the:

(i) Architect; and

(ii) Hospital CEO, COO or designee; and

(iii) Hospital facilities director.

(g) Submit to the department for review any addenda or modifications to the construction documents;

(h) Assure construction is completed in compliance with the final "department approved" documents. Compliance with these standards and regulations does not relieve the hospital of the need to comply with applicable state and local building and zoning codes. Where differences in interpretations occur, the hospital will follow the most stringent requirement.

(i) The hospital will allow any necessary inspections for the verification of compliance with the construction document, addenda, and modifications.

(j) Notify the department in writing when construction is completed and include a copy of the local jurisdiction's approval for occupancy.

(3) The hospital will not begin construction or use any new or remodeled areas until:

(a) The infection control risk assessment has been approved by the department;

(b) The interim life safety plan has been approved by the department;

(c) An acknowledgment of risk form has been submitted to the department as required by subsection (2)(f) of this section;

(d) The department has approved construction documents or granted authorization to begin construction; and

(e) The local jurisdictions have issued a building permit, when applicable or given approval to occupy.

(4) The department will issue an "authorization to begin construction" when subsection (3)(a), (b), and (c) are approved and the presubmission conference is concluded.

[Statutory Authority: Chapter 70.41 RCW. 08-14-023, § 246-320-505, filed 6/20/08, effective 7/21/08. Statutory Authority: RCW 70.41.030 and 43.70.-040. 99-04-052, § 246-320-505, filed 1/28/99, effective 3/10/99.]

WAC 246-320-600 Washington state amendments. This section contains the Washington state amendments to the 2006 edition of the *Guidelines for Design and Construction of Health Care Facilities* as published by the American Institute of Architects, 1735 New York Avenue, N.W., Washington, D.C. 20006.

CHAPTER 1.2 ENVIRONMENT OF CARE

2.1.3.4 This section is not adopted.

CHAPTER 1.3 SITE

2.2 Availability of Transportation

This section is not adopted.

3.3 Parking

This section is not adopted.

CHAPTER 1.4 EQUIPMENT

A1.3.1 Design should consider the placement of cables from portable equipment so that personnel circulation and safety are maintained.

CHAPTER 1.5 PLANNING, DESIGN AND CONSTRUCTION

2.1 General

2.1.1 ICRA Panel

The ICRA shall be conducted by a panel with expertise in the areas affected by the project; at a minimum this would include infection control, epidemiology and facility representation.

CHAPTER 1.6 COMMON REQUIREMENTS

2.1.1 General

Unless otherwise specified herein, all plumbing systems shall be designed and installed in accordance with the plumbing code as adopted by the state building code council.

2.1.3.2 Handwashing Stations

General handwashing stations used by medical and nursing staff, patients, and food handlers shall be trimmed with valves that can be operated without hands. Single-lever or wrist blade devices shall be permitted. Blade handles used for this purpose shall be at least 4 inches (10.2 centimeters) in length.

2.2.2 HVAC Air Distribution

2.2.2.1 HVAC Ductwork

(2) Humidifiers.

(a) If humidifiers are located within a ventilation system upstream of the final filters, they shall be at least 15 feet (4.57 meters) upstream of the final filters.

(b) Ductwork with duct-mounted humidifiers shall have a means of water removal.

(c) An adjustable high-limit humidistat shall be located downstream of the humidifier to reduce the potential for condensation inside the duct.

(d) Humidifiers shall be connected to airflow proving switches that prevent humidification unless the required volume of airflow is present or high-limit humidistats are provided.

(e) All duct takeoffs shall be sufficiently downstream of the humidifier to ensure complete moisture absorption.

(f) Steam humidifiers shall be used. Reservoir type water spray or evaporative pan humidifiers shall not be used.

A2.2.2.1(2) It is recognized that some facilities may not require humidity control within the ranges in table 2.1-2 and that the final determination of a facility's ability to control humidity will be made by that facility.

CHAPTER 2.1 GENERAL HOSPITALS

1.2.2 Swing Beds

When the concept of swing beds is part of the functional program, care shall be taken to include requirements for all intended categories. Nursing homes and long-term care units must be distinct and separate from swing beds.

A1.2.2 Swing Beds

Every bed must be able to provide both acute care and skilled nursing care. The concept is that the patient would not have to be moved, rather their status would change from "acute" to "swing bed" status.

2.2.1 Toilet Rooms

2.2.1.3 Toilet room doors shall swing outward or be double acting. Where local requirements permit, surface mounted sliding doors may be used, provided adequate provisions are made for acoustical and visual privacy.

2.3.5 Nourishment Area

2.3.5.1 A nourishment area shall have a sink, work counter, refrigerator, storage cabinets, and equipment for hot and cold nourishment between scheduled meals. This area shall include space for trays and dishes used for nonscheduled meal service. This function may be combined with a clean utility without duplication of sinks and work counters.

2.3.10 Housekeeping Room

2.3.10.1 Housekeeping rooms shall be directly accessible from the unit or floor they serve and may serve more than one nursing unit on a floor. Housekeeping and soiled rooms may be combined.

3.1.1.1 Capacity

(1) In new construction, the maximum number of beds per room shall be two.

(2) Where renovation work is undertaken and the present capacity is more than one patient, maximum room capacity shall be no more than the present capacity with a maximum of four patients.

3.1.1.5 Handwashing Stations. These shall be provided to serve each patient room.

(1) A handwashing station shall be provided in the toilet room.

(2) Or, in private rooms, a handwashing station shall be provided in the patient room provided alcohol-based hand sanitizers are provided in the toilet room. The handwashing station shall be located outside the patient's cubicle curtain and convenient to staff entering and leaving the room.

(3) A hand sanitation station in patient rooms utilizing waterless cleaners shall be permitted in renovations of existing facilities where existing conditions prohibit an additional handwashing station.

3.1.2 Patient/Family Centered Care Rooms

This section is not adopted.

3.1.5 Support Areas for Medical/Surgical Nursing Units

3.1.5.5 Handwashing Stations

(1) Handwashing stations or waterless cleansing stations shall be conveniently accessible to the nurse station, medication station, and nourishment station. "Convenient" is defined as not requiring staff to access more than two spaces separated by a door.

(2) One handwashing station may serve several areas if convenient to each.

4.3.1 Labor Rooms

4.3.1.1 General

(2) Access. Labor rooms shall have controlled access with doors.

5.1.3 Definitive Emergency Care

5.1.3.7(5) Decontamination Area

(a) Location. In new construction, a decontamination room shall be provided with an outside entry door as far as practical from the closest other entrance. The internal door of this room shall open into a corridor of the emergency department, swing into the room and be lockable against ingress from the corridor.

(b) Space requirements. The room shall provide a minimum of 80 square feet (7.43 square meters) clear floor area.

(c) Facility requirements.

(i) The room shall be equipped with two hand-held shower heads with temperature controls.

(ii) Portable or hard-piped oxygen shall be provided. Portable suction shall also be available.

(d) Construction requirements. The room shall have all smooth, nonporous, scrubbable, nonabsorptive, nonperforated surfaces. Fixtures shall be acid resistant. The floor of the decontamination room shall be self-coving to a height of 6 inches (15.24 centimeters).

(e) This section does not preclude decontamination capability at other locations or entrances immediately adjacent to the emergency department.

5.3.3 Pre- and Postoperative Holding Areas

5.3.3.2 Post-anesthetic Care Units (PACUs)

(4) Facility requirements. Each PACU shall contain a medication station; handwashing stations; nurse station with charting facilities; clinical sink; provisions for bedpan cleaning; and storage space for stretchers, supplies, and equipment.

(a) Handwashing station(s). At least one handwashing station with hands-free or wrist blade-operable controls shall be available for every six beds or fraction thereof, uniformly distributed to provide equal access from each bed.

(b) Staff toilet. A staff toilet shall be located within the working area to maintain staff availability to patients.

5.3.5 Support Areas for the Surgical Suite

5.3.5.4 Scrub Facilities. Two scrub positions shall be provided near the entrance to each operating room.

5.9.3 Examination Room

This section is not adopted.

6.1. Pharmacy

Until final adoption of USP 797 by either federal or other state programs, facilities may request plan review for conformance to USP 797 with their initial submission to the Department of Health, Construction Review Services. The most current edition of USP 797 at the time of the application will be used for plan review service.

8.2.2.3 Doors

(2) Door Size.

(a) General. Where used in these Guidelines, door width and height shall be the nominal dimension of the door leaf, ignoring projections of frame and stops. Note: While these standards are intended for access by patients and patient equipment, size of office furniture, etc., shall also be considered.

(b) Inpatient bedrooms.

(i) New construction. The minimum door size for inpatient bedrooms in new work areas shall be 4 feet (1.22 meters) wide and 7 feet (2.13 meters) high to provide clearance for movement of beds and other equipment.

(ii) Renovation. Existing doors of not less than 2 feet 10 inches (86.36 centimeters) wide may be considered for acceptance where function is not adversely affected and replacement is impractical.

(c) Rooms for stretchers/wheelchairs. Doors to other rooms used for stretchers (including hospital wheeled-bed stretchers) and/or wheelchairs shall have a minimum width of 2 feet 10 inches (86.36 centimeters).

10.1.2 Plumbing and Other Piping Systems

10.1.2.5 Drainage Systems

(1) Piping.

(a) Drain lines from sinks used for acid waste disposal shall be made of acid resistant material.

(b) Drain lines serving some types of automatic blood-cell counters shall be of carefully selected material that will eliminate potential for undesirable chemical reactions (and/or explosions) between sodium azide wastes and copper, lead, brass, solder, etc.

(c) Reasonable effort shall be made to avoid installing drainage piping within the ceiling or exposed in operating and delivery rooms, nurseries, food preparation centers, food-serving facilities, food storage areas, central services, electronic data processing areas, electric closets, and other sensitive areas. Where exposed overhead drain piping in these areas is unavoidable, special provision shall be made to protect the space below from leakage, condensation or dust particles.

10.2.1 General

10.2.1.1 Mechanical System Design

(2) Air-handling systems.

(a) These shall be designed with an economizer cycle where appropriate to use outside air. (Use of mechanically circulated air does not reduce need for filtration.)

(b) VAV systems. The energy-saving potential of variable-air-volume systems is recognized and the standards herein are intended to maximize appropriate use of those systems. Any system used for occupied areas shall include provisions to avoid air stagnation in interior spaces where thermostat demands are met by temperatures of surrounding areas and air movement relationship changes if constant volume and variable volume are supplied by one air-handling system with a common pressure dependent return system.

(c) Noncentral air-handling systems (i.e., individual room units used for heating and cooling purposes, such as fan-coil units, heat pump units, etc.). These units may be used as recirculating units only. All outdoor air requirements shall be met by a separate central air-handling system with proper filtration, as noted in Table 2.1-3.

10.2.1.2 Ventilation and Space Conditioning Requirements. All rooms and areas used for patient care shall have provisions for ventilation.

(2) Air change rates. Air supply and exhaust in rooms for which no minimum total air change rate is noted may vary down to zero in response to room load. For rooms listed in Table 2.1-2, where VAV systems are used, minimum total air change shall be within limits noted, the minimum required by the Washington State Ventilation and Indoor Air Quality Code (chapter 51-13 WAC).

(3) Temperature. Space temperature shall be as indicated in Table 2.1-2.

10.2.4 HVAC Air Distribution

10.2.4.3 Exhaust Systems

(1) General.

(a) Exhaust systems may be combined.

(b) Local exhaust systems shall be used whenever possible in place of dilution ventilation to reduce exposure to hazardous gases, vapors, fumes, or mists.

(c) Fans serving exhaust systems shall be located at the discharge end and shall be readily serviceable.

(d) Airborne infection isolation rooms shall not be served by exhaust systems incorporating a heat wheel.

10.2.5 HVAC Filters

10.2.5.2 Filter Bed Location. Where two filter beds are required, filter bed no. 1 shall be located upstream of the air conditioning equipment and filter bed no. 2 shall be downstream of the last component of any central air-handling unit and plenum/duct liner except: Steam injection-type humidifiers; terminal heating coils; and mixed boxes and acoustical traps that have special covering over the lining. Terminal cooling coils and linings are permitted downstream of filter bed no. 2 with additional filtration downstream of coil meeting requirements of filter bed no. 2.

10.2.5.5 Filter Manometers. A manometer shall be installed across each filter bed having a required efficiency of 75 percent or more, including hoods requiring HEPA filters. Manometers may be omitted at HEPA-filtered ceiling diffusers if pressure-independent terminal units provide the operator a means to verify the actual airflow to the HEPA-filtered diffusers in each room. Provisions shall be made to allow access for field testing. A recognized air flow measuring device would be acceptable, in lieu of terminal units.

Table 2.1-2 Ventilation Requirements for Areas Affecting Patient Care in Hospitals and Outpatient Facilities

Footnote 8 The ranges listed are the minimum and maximum limits where control is specifically needed. The maximum and minimum limits are not intended to be independent of a space's associated temperature. See figure 2.1-1 for a

graphic representation of the indicated changes on a psychometric chart. Shaded area is acceptable range.

CHAPTER 2.2 SMALL INPATIENT PRIMARY CARE HOSPITALS

1.3.2 Parking

This section not adopted.

CHAPTER 2.3 PSYCHIATRIC HOSPITALS

1.6.1 Parking

This section is not adopted.

CHAPTER 3.1 OUTPATIENT FACILITIES

1.7.2 Parking

This section is not adopted.

7.1.2 Plumbing and Other Piping Systems

7.1.2.1 General Piping and Valves

(3) To prevent food contamination, no plumbing lines shall be exposed overhead or on walls where possible accumulation of dust or soil may create a cleaning problem or where leaks would create a potential for food contamination.

CHAPTER 3.2 PRIMARY CARE OUTPATIENT CENTERS

1.3.1 Parking

This section is not being adopted.

CHAPTER 3.3 SMALL PRIMARY (NEIGHBORHOOD) OUTPATIENT FACILITIES

1.3.2 Parking

This section is not adopted.

CHAPTER 3.5 FREESTANDING URGENT CARE FACILITIES

1.2.2 Parking

This section is not adopted.

CHAPTER 3.6 FREESTANDING BIRTHING CENTERS

1.2.1 Parking

This section is not adopted.

CHAPTER 3.7 OUTPATIENT SURGICAL FACILITIES

1.6.1 Parking

This section is not adopted.

CHAPTER 3.9 GASTROINTESTINAL ENDOSCOPY FACILITIES

1.6.1 Parking

This section is not adopted.

CHAPTER 3.11 PSYCHIATRIC OUTPATIENT CENTERS

1.3.1 Parking

This section is not adopted.

[Statutory Authority: Chapter 70.41 RCW. 08-14-023, § 246-320-600, filed 6/20/08, effective 7/21/08.]

WAC 246-320-615 Pharmacy. Hospitals will:

(1) Provide each pharmacy with support facilities meeting requirements in WAC 246-320-535(4) housekeeping supply room;

(2) Locate pharmacy in a separate and secure room;

(3) Provide pharmacy with:

(a) Storage, including locked storage for Schedule II controlled substances in accordance with WAC 246-873-070 and 246-873-080;

(b) All entrance doors equipped with closers;

(c) Automatic locking mechanisms on all entrance doors to preclude entrance without a key or combination;

(d) All perimeter walls of the pharmacy and vault constructed full height from floor to underside of structure above;

(e) Security devices or alarm systems for perimeter doors, windows and relites;

(f) An emergency signal device to signal at a location where twenty-four-hour assistance is available;

(g) Space for files and clerical functions;

(h) Break-out and storage area separate from clean areas; and

(i) Electrical service including emergency power to critical pharmacy areas and equipment;

(4) Provide a general compounding and dispensing unit, room, or area with:

(a) A work counter with impermeable surface;

(b) A corrosion-resistant sink, suitable for handwashing, mounted in counter or integral with counter;

(c) Storage space;

(d) A refrigeration and freezing unit; and

(e) Space for mobile equipment;

(5) Provide manufacturing and unit dose packaging area or room, if planned, with the following:

(a) Work counter with impermeable surface;

(b) Corrosion-resistant sink suitable for handwashing, mounted in counter or integral with counter; and

(c) Storage space;

(6) Locate admixture, radiopharmaceuticals, and other sterile compounding room, if planned, in a low traffic, clean area with:

(a) A preparation area;

(b) A work counter with impermeable surface;

(c) A corrosion-resistant handsfree sink, suitable for hand washing, mounted in counter or integral with counter;

(d) Space for mobile equipment;

(e) Storage space;

(f) A laminar flow hood in admixture area; and

(g) Shielding and appropriate ventilation in accordance with WAC 246-320-525 (4)(k) and (l) for storage and preparation of radiopharmaceuticals and chemotherapeutic agents;

(7) If satellite pharmacies are planned, meet:

(a) Subsections (1) and (3)(a), (b), (c), (d), (e), and (f) of this section when drugs will be stored;

(b) Subsection (3)(g), (h), and (i) of this section, if appropriate; and

(c) Subsections (4)(a) through (e) and (6)(a) through (g) of this section if planned;

(8) Provide separate outpatient pharmacy, if planned, meeting requirements for satellite pharmacy.

[Statutory Authority: RCW 70.41.030 and 43.70.040. 99-04-052, § 246-320-615, filed 1/28/99, effective 3/10/99.]

WAC 246-320-990 Fees. This section establishes the licensure fee for hospitals licensed under chapter 70.41 RCW.

(1) Applicants and licensees shall:

(a) Submit an annual license fee of one hundred thirteen dollars and zero cents for each bed space within the licensed bed capacity of the hospital to the department;

(b) Include all bed spaces in rooms complying with physical plant and movable equipment requirements of this chapter for twenty-four-hour assigned patient rooms;

(c) Include neonatal intensive care bassinet spaces;

(d) Include bed spaces assigned for less than twenty-four-hour patient use as part of the licensed bed capacity when:

(i) Physical plant requirements of this chapter are met without movable equipment; and

(ii) The hospital currently possesses the required movable equipment and certifies this fact to the department;

(e) Exclude all normal infant bassinets;

(f) Limit licensed bed spaces as required under chapter 70.38 RCW;

(g) Submit an application for bed additions to the department for review and approval under chapter 70.38 RCW subsequent to department establishment of the hospital licensed bed capacity;

(h) Set up twenty-four-hour assigned patient beds only within the licensed bed capacity approved by the department.

(2) Refunds. The department shall refund fees paid by the applicant for initial licensure if:

(a) The department has received the application but has not performed an on-site survey or provided technical assistance, the department will refund two-thirds of the fees paid, less a fifty dollar processing fee.

(b) The department has received the application and has conducted an on-site survey or provided technical assistance, the department will refund one-third of the fees paid, less a fifty dollar processing fee.

(c) The department will not refund fees if:

(i) The department has performed more than one on-site visit for any purpose;

(ii) One year has elapsed since an initial licensure application is received by the department, and the department has not issued the license because the applicant has failed to complete requirements for licensure; or

(iii) The amount to be refunded as calculated by (a) or (b) of this subsection is ten dollars or less.

(3) Construction review applicants shall submit the appropriate fee per chapter 246-314 WAC at the time of application to construction review services.

[Statutory Authority: Chapter 70.41 RCW. 08-14-023, § 246-320-990, filed 6/20/08, effective 7/21/08. Statutory Authority: RCW 43.70.250. 07-17-174, § 246-320-990, filed 8/22/07, effective 9/22/07; 05-18-073, § 246-320-990, filed 9/7/05, effective 10/8/05. Statutory Authority: RCW 43.70.250, 18.46.030, 43.70.110, 71.12.470. 04-19-141, § 246-320-990, filed 9/22/04, effective 10/23/04. Statutory Authority: RCW 43.70.250 and 70.38.105(5). 03-22-020, § 246-320-990, filed 10/27/03, effective 11/27/03. Statutory Authority: RCW 43.70.250. 02-13-061, § 246-320-990, filed 6/14/02, effective 7/15/02. Statutory Authority: RCW 70.41.100, 43.20B.110, and 43.70.250. 01-20-119, § 246-320-990, filed 10/3/01, effective 11/3/01; 99-24-096, § 246-320-990, filed 11/30/99, effective 12/31/99. Statutory Authority: RCW 70.41.030 and 43.70.040. 99-04-052, § 246-320-990, filed 1/28/99, effective 3/10/99.]

Chapter 246-322 WAC

PRIVATE PSYCHIATRIC AND ALCOHOLISM HOSPITALS

WAC

246-322-010 Definitions.
246-322-020 Licensure—Initial, renewal, modifications.
246-322-025 Responsibilities and rights—Licensee and department.
246-322-030 Criminal history, disclosure, and background inquiries.
246-322-035 Policies and procedures.
246-322-040 Governing body and administration.
246-322-050 Staff.
246-322-060 HIV/AIDS education and training.
246-322-100 Infection control.
246-322-120 Physical environment.
246-322-140 Patient living areas.
246-322-150 Clinical facilities.
246-322-160 Bathrooms, toilet rooms and handwashing sinks.
246-322-170 Patient care services.
246-322-180 Patient safety and seclusion care.
246-322-190 Provisions for patients with tuberculosis.
246-322-200 Clinical records.
246-322-210 Pharmacy and medication services.
246-322-220 Laboratory services.
246-322-230 Food and dietary services.
246-322-240 Laundry.
246-322-250 Construction.
246-322-500 Exemptions.
246-322-990 Private psychiatric hospital fees.

DISPOSITION OF SECTIONS FORMERLY CODIFIED IN THIS CHAPTER

246-322-001 Purpose and scope. [Statutory Authority: Chapter 71.12 RCW and RCW 43.60.040. 95-22-012, § 246-322-001, filed 10/20/95, effective 11/20/95.] Repealed by 97-20-101, filed 9/29/97, effective 10/30/97. Statutory Authority: RCW 43.70.040.

246-322-070 Patient care services. [Statutory Authority: RCW 43.70.040. 91-02-049 (Order 121), recodified as § 246-322-070, filed 12/27/90, effective 1/31/91. Statutory Authority: Chapter 71.12 RCW. 82-23-003 (Order 1898), § 248-22-021, filed 11/4/82. Statutory Authority: RCW 43.20.050. 81-02-004 (Order 205), § 248-22-021, filed 12/30/80.] Repealed by 95-22-012, filed 10/20/95, effective 11/20/95. Statutory Authority: Chapter 71.12 RCW and RCW 43.60.040.

246-322-080 Food and dietary services. [Statutory Authority: RCW 43.70.040. 91-02-049 (Order 121), recodified as § 246-322-080, filed 12/27/90, effective 1/31/91. Statutory Authority: Chapter 71.12 RCW. 82-23-003 (Order 1898), § 248-22-026, filed 11/4/82. Statutory Authority: RCW 43.20.050. 81-02-004 (Order 205), § 248-22-026, filed 12/30/80.] Repealed by 95-22-012, filed 10/20/95, effective 11/20/95. Statutory Authority: Chapter 71.12 RCW and RCW 43.60.040.

246-322-090 Pharmaceutical services. [Statutory Authority: RCW 43.70.040. 91-02-049 (Order 121), recodified as § 246-322-090, filed 12/27/90, effective 1/31/91. Statutory Authority: Chapter 71.12 RCW. 82-23-003 (Order 1898), § 248-22-031, filed 11/4/82. Statutory Authority: RCW 43.20.050. 81-02-004 (Order 205), § 248-22-031, filed 12/30/80.] Repealed by 95-22-012, filed 10/20/95, effective 11/20/95. Statutory Authority: Chapter 71.12 RCW and RCW 43.60.040.

246-322-110 Clinical records. [Statutory Authority: RCW 43.70.040. 91-02-049 (Order 121), recodified as § 246-322-110, filed 12/27/90, effective 1/31/91. Statutory Authority: Chapter 71.12 RCW. 82-23-003 (Order 1898), § 248-22-041, filed 11/4/82. Statutory Authority: RCW 43.20.050. 81-02-004 (Order 205), § 248-22-041, filed 12/30/80.] Repealed by 95-22-012, filed 10/20/95, effective 11/20/95. Statutory Authority: Chapter 71.12 RCW and RCW 43.60.040.

246-322-130 Laboratory services. [Statutory Authority: RCW 43.70.040. 91-02-049 (Order 121), recodified as § 246-322-130, filed 12/27/90, effective 1/31/91. Statutory Authority: Chapter 71.12 RCW. 82-23-003 (Order 1898), § 248-22-051, filed 11/4/82. Statutory Authority: RCW 43.20.050. 81-02-004 (Order 205), § 248-22-051, filed 12/30/80.] Repealed by 95-22-012, filed 10/20/95, effective 11/20/95. Statutory Authority: Chapter 71.12 RCW and RCW 43.60.040.

246-322-991 Alcoholism hospital fees. [Statutory Authority: RCW 43.70.250, 43.70.110 and 43.20B.020. 95-12-097, § 246-322-991, filed 6/7/95, effective 7/8/95. Statutory Authority: RCW 43.70.250. 92-12-028 (Order 273), § 246-322-991, filed 5/28/92, effective 6/28/92. Statutory Authority: RCW 43.70.040. 91-02-050 (Order 122), § 246-322-991, filed 12/27/90, effective 1/31/91.] Repealed by 95-22-012, filed 10/20/95, effective 11/20/95. Statutory Authority: Chapter 71.12 RCW and RCW 43.60.040.

WAC 246-322-010 Definitions. For the purposes of this chapter, the following words and phrases have the following meanings unless the context clearly indicates otherwise:

(1) "Abuse" means an act by any individual which injures, exploits or in any way jeopardizes a patient's health, welfare, or safety, including but not limited to:

(a) Physically damaging or potentially damaging nonaccidental acts;

(b) Emotionally damaging verbal behavior and harassment or other actions which may result in emotional or behavioral problems; and

(c) Sexual use, exploitation and mistreatment through inappropriate touching, inappropriate remarks or encouraging participation in pornography or prostitution.

(2) "Administrator" means the individual responsible for the day-to-day operation of the hospital.

(3) "Advanced registered nurse practitioner" means a registered nurse authorized to practice specialized and advanced nursing according to the requirements in RCW 18.88.175.

(4) "Authenticate" means to authorize or validate an entry in a record by:

(a) A signature including first initial, last name, and professional title/discipline; or

(b) A unique identifier which clearly indicates the responsible individual.

(5) "Bathing fixture" means a bathtub, shower, or combination bathtub shower.

(6) "Bathroom" means a room containing one or more bathing fixtures.

(7) "Child psychiatrist" means an individual licensed as a physician under chapter 18.71 or 18.57 RCW who is board-certified or board-eligible with a specialty in child psychiatry by:

(a) The American Board of Psychiatry and Neurology; or

(b) The Bureau for Osteopathic Specialists, American Osteopathic Neurology and Psychiatry.

(8) "Clinical record" means a file maintained by the licensee for each patient containing all pertinent psychological, medical, and clinical information.

(9) "Comprehensive treatment plan" means a written plan of care developed by a multidisciplinary treatment team for an individual patient, based on an assessment of the patient's developmental, biological, emotional, psychological, and social strengths and needs, which includes:

(a) Treatment goals with specific time frames;

(b) Specific services to be provided;

(c) The name of each individual responsible for each service provided;

(d) Behavior management; and

(e) Discharge criteria with estimated time frames.

(10) "Construction" means:

(a) A new building to be used as a hospital or part of a hospital;

(b) An addition, modification or alteration which changes the approved use of a room or area; and

(c) An existing building or portion thereof to be converted for use as a hospital.

(11) "Department" means the Washington state department of health.

(12) "Dietitian" means an individual certified under chapter 18.138 RCW.

(13) "Document" means to record, with authentication, date and time.

(14) "Drug administration" means the act of an authorized individual giving a single dose of prescribed drug or biological to a patient according to the laws and regulations governing such acts.

(15) "Drug dispensing" means interpreting a prescription and, pursuant to that prescription, selecting, measuring, labeling, packaging, and issuing the prescribed medication to a patient or service unit of the facility.

(16) "Exemption" means a written authorization from the department which releases a licensee from meeting a specific requirement or requirements in this chapter.

(17) "Family" means an individual or individuals:

(a) Designated by the patient, who may or may not be related to the patient; or

(b) Legally appointed to represent the patient.

(18) "Governing body" means the person legally responsible for the operation and maintenance of the hospital.

(19) "Health care professional" means an individual who provides health or health-related services within the individual's authorized scope of practice, who is:

(a) Licensed, certified or registered under Title 18 RCW; or

(b) A recreational therapist as defined in this section.

(20) "Licensed bed capacity" means the patient occupancy level requested by the applicant or licensee and approved by the department.

(21) "Licensee" means the person to whom the department issues the hospital license.

(22) "Maximum security window" means a security window which, if operable, opens only with a key or special tool.

(23) "Mental health professional" means:

(a) A psychiatrist, psychologist, psychiatric nurse or social worker; or

(b) An individual with:

(i) A masters degree in behavioral science, nursing science, or a related field from an accredited college or university; and

(ii) Two years experience directly treating mentally ill individuals under the supervision of a mental health professional.

(24) "Multidisciplinary treatment team" means a group of individuals from various clinical services who assess, plan, implement and evaluate treatment for patients under care.

(25) "Neglect" means conduct which results in deprivation of care necessary to maintain a patient's minimum physical and mental health, including but not limited to:

(a) Physical and material deprivation;

(b) Lack of medical care;

(c) Inadequate food, clothing or cleanliness;

(d) Refusal to acknowledge, hear or consider a patient's concerns;

(e) Lack of social interaction and physical activity;

(f) Lack of personal care; and

(g) Lack of supervision appropriate for the patient's level of functioning.

(26) "Occupational therapist" means an individual licensed under chapter 18.59 RCW.

(27) "Patient-care staff" means employees, temporary employees, volunteers, or contractors, who provide direct care services for patients.

(28) "Person" means any individual, firm, partnership, corporation, company, association, joint stock association, and the legal successor thereof.

(29) "Pharmacist" means an individual licensed as a pharmacist under chapter 18.64 RCW.

(30) "Pharmacy" means the central area in a hospital where prescriptions are filled, or drugs are stored and issued to hospital departments.

(31) "Physician" means an individual licensed under chapter 18.71 or 18.57 RCW.

(32) "Physician assistant" means an individual licensed under chapter 18.71A or 18.57A RCW.

(33) "Private psychiatric hospital" or "hospital" means a privately owned and operated establishment or institution which:

(a) Provides accommodations and services over a continuous period of twenty-four hours or more; and

(b) Is expressly and exclusively for observing, diagnosing, or caring for two or more individuals with signs or symptoms of mental illness, who are not related to the licensee.

(34) "Professional staff" means health care professionals appointed by the governing body to practice within the parameters of the professional staff bylaws.

(35) "Psychiatric nurse" means a registered nurse with:

(a) A bachelor's degree from an accredited college or university and two years experience directly treating mentally ill or emotionally disturbed individuals under the supervision of a psychiatrist or psychiatric nurse; or

(b) Three years experience directly treating mentally ill or emotionally disturbed individuals under the supervision of a psychiatrist or psychiatric nurse.

(36) "Psychiatrist" means an individual licensed as a physician under chapter 18.71 or 18.57 RCW who is board-certified or board-eligible with a specialty in psychiatry by:

(a) The American Board of Psychiatry and Neurology; or

(b) The Bureau for Osteopathic Specialists, American Osteopathic Neurology and Psychiatry.

(37) "Psychologist" means an individual licensed under chapter 18.83 RCW.

(38) "Recreational therapist" means an individual:

(a) With a bachelor's degree with a major or option in therapeutic recreation or in recreation for the ill and handicapped; or

(b) Certified or certification-eligible under Certification Standards for Therapeutic Recreation Personnel, June 1, 1988, National Council for Therapeutic Recreation Certification, 49 South Main Street, Suite 005, Spring Valley, New York 10977.

(39) "Referred outpatient diagnostic service" means a diagnostic test or examination performed outside the hospital which:

(a) Is ordered by a member of the professional staff legally permitted to order such tests and examinations, to whom the findings and results are reported; and

(b) Does not involve a parenteral injection, local or general anesthesia, or a surgical procedure.

(40) "Registered nurse" means an individual licensed under chapter 18.88 RCW.

(41) "Restraint" means any apparatus or chemical used to prevent or limit volitional body movements.

(42) "Seclusion room" means a small room designed for maximum security and patient protection, with minimal sensory stimuli, for the temporary care of one patient.

(43) "Security room" means a patient sleeping room designed, furnished and equipped to provide maximum safety and security.

(44) "Security window" means a window designed to inhibit exit, entry and injury to a patient, with safety glazing or other security feature to prevent breakage.

(45) "Self-administration" means the act of a patient taking the patient's own medication from a properly labeled container while on hospital premises, with the hospital responsible for appropriate medication use.

(46) "Sink" means a properly trapped plumbing fixture, with hot and cold water under pressure, which prevents back passage or return of air.

(47) "Social worker" means an individual registered or certified as a counselor under chapter 18.19 RCW with a master's degree in social work from an accredited school of social work.

(48) "Special services" means clinical and rehabilitative activities or programs including, but not limited to:

(a) Educational and vocational training;

(b) Dentistry;

(c) Speech therapy;

(d) Physical therapy;

(e) Occupational therapy;

(f) Language translation; and

(g) Training for individuals with hearing or visual impairment.

(49) "Staff" means employees, temporary employees, volunteers, and contractors.

(50) "Toilet" means a fixture fitted with a seat and flushing device used to dispose of bodily waste.

(51) "Useable floor space" means the total floor surface area excluding area used for closets, wardrobes and fixed equipment.

[Statutory Authority: Chapter 71.12 RCW and RCW 43.60.040. 95-22-012, § 246-322-010, filed 10/20/95, effective 11/20/95. Statutory Authority: RCW 43.70.040. 91-02-049 (Order 121), recodified as § 246-322-010, filed 12/27/90, effective 1/31/91. Statutory Authority: Chapter 71.12 RCW. 82-23-003 (Order 1898), § 248-22-001, filed 11/4/82. Statutory Authority: RCW 43.20.050. 81-02-004 (Order 205), § 248-22-001, filed 12/30/80; Regulation .22.001, effective 3/11/60.]

WAC 246-322-020 Licensure—Initial, renewal, modifications. (1) A person shall have a current license issued by the department before operating or advertising a private psychiatric hospital.

(2) An applicant for initial licensure shall submit to the department, forty-five days or more before commencing business:

(a) A completed application on forms provided by the department;

(b) Certificate of need approval according to the provisions of chapter 246-310 WAC for the number of beds indicated on the application;

(c) Verification of department approval of facility plans submitted for construction review according to the provisions of WAC 246-322-250;

(d) A criminal history background check in accordance with WAC 246-322-030(2);

(e) Verification of approval as a private psychiatric hospital from the state director of fire protection according to RCW 71.12.485;

(f) The fee specified in WAC 246-322-990; and

(g) Other information as required by the department.

(3) The licensee shall apply for license renewal annually at least thirty days before the expiration date of the current license by submitting to the department:

(a) A completed application on forms provided by the department;

(b) The fee specified in WAC 246-322-990; and

(c) Other information as required by the department.

(4) At least sixty days prior to transferring ownership of a currently licensed hospital:

(a) The licensee shall submit to the department:

(i) The full name and address of the current licensee and prospective owner;

(ii) The name and address of the currently licensed hospital and the name under which the transferred hospital will operate;

(iii) Name of the new administrator; and

(iv) Date of the proposed change of ownership; and

(b) The prospective owner shall apply for licensure according to subsection (2) of this section.

[Statutory Authority: Chapter 71.12 RCW and RCW 43.60.040. 95-22-012, § 246-322-020, filed 10/20/95, effective 11/20/95. Statutory Authority: RCW 43.70.040. 91-02-049 (Order 121), recodified as § 246-322-020, filed 12/27/90, effective 1/31/91. Statutory Authority: Chapter 34.05 RCW, RCW 34.05.220 (1)(a) and 1989 1st ex.s. c 9 § 106. 90-06-019 (Order 039), § 248-22-005, filed 2/28/90, effective 3/1/90. Statutory Authority: Chapter 71.12 RCW. 82-23-003 (Order 1898), § 248-22-005, filed 11/4/82. Statutory Authority: RCW 43.20.050. 81-02-004 (Order 205), § 248-22-005, filed 12/30/80.]

WAC 246-322-025 Responsibilities and rights—Licensee and department. (1) The licensee shall:

(a) Comply with the provisions of chapter 71.12 RCW and this chapter;

(b) Post the private psychiatric hospital license in a conspicuous place on the premises;

(c) Maintain the bed capacity at or below the licensed bed capacity;

(d) Cooperate with the department during on-site surveys and investigations;

(e) Respond to a statement of deficiencies by submitting to the department, according to the dates specified on the statement of deficiencies form:

(i) A written plan of correction for each deficiency stated in the report and date to be completed; and

(ii) A progress report stating the dates deficiencies were corrected.

(f) Obtain department approval before changing the bed capacity;

(g) Obtain department approval before starting any construction or making changes in department-approved plans or specifications;

(h) Notify the department immediately upon a change of administrator or governing body;

(i) When assuming ownership of an existing hospital, maintain past and current clinical records, registers, indexes, and analyses of hospital services, according to state law and regulations; and

(j) Obtain department approval of a plan for storing and retrieving patient records and reports prior to ceasing operation as a hospital.

(2) An applicant or licensee may contest a disciplinary decision or action of the department according to the provisions of RCW 43.70.115, chapter 34.05 RCW and chapter 246-10 WAC.

(3) The department shall:

(a) Issue or renew a license when the applicant or licensee meets the requirements in chapter 71.12 RCW and this chapter;

(b) Conduct an on-site inspection of the hospital prior to granting an initial license;

(c) Conduct on-site inspections at any time to determine compliance with chapter 71.12 RCW and this chapter;

(d) Give the administrator a written statement of deficiencies of chapter 71.12 RCW and this chapter observed during on-site surveys and investigations; and

(e) Comply with RCW 43.70.115, chapter 34.05 RCW and chapter 246-10 WAC when denying, suspending, modifying, or revoking a hospital license.

(4) The department may deny, suspend, or revoke a private psychiatric hospital license if the department finds the applicant, licensee, its agents, officers, directors, or any person with any interest therein:

(a) Is unqualified or unable to operate or direct operation of the hospital according to chapter 71.12 RCW and this chapter;

(b) Makes a misrepresentation of, false statement of, or fails to disclose a material fact, to the department:

(i) In an application for licensure or renewal of licensure;

(ii) In any matter under department investigation; or

(iii) During an on-site survey or inspection;

(c) Obtains or attempts to obtain a license by fraudulent means or misrepresentation;

(d) Fails or refuses to comply with the requirements of chapter 71.12 RCW or this chapter;

(e) Compromises the health or safety of a patient;

(f) Has a record of a criminal or civil conviction for:

(i) Operating a health care or mental health care facility without a license;

(ii) Any crime involving physical harm to another individual; or

(iii) Any crime or disciplinary board final decision specified in RCW 43.43.830;

(g) Had a license to operate a health care or mental health care facility denied, suspended or revoked;

(h) Refuses to allow the department access to facilities or records, or fails to promptly produce for inspection any book, record, document or item requested by the department, or interferes with an on-site survey or investigation;

(i) Commits, permits, aids or abets the commission of an illegal act on the hospital premises;

(j) Demonstrates cruelty, abuse, negligence, assault or indifference to the welfare and well-being of a patient;

(k) Fails to take immediate appropriate corrective action in any instance of cruelty, assault, abuse, neglect, or indifference to the welfare of a patient;

(l) Misappropriates the property of a patient;

(m) Fails to exercise fiscal accountability and responsibility toward individual patients, the department, or the business community; or

(n) Retaliates against a staff person, patient or other individual for reporting suspected abuse or other alleged improprieties.

(5) The department may summarily suspend a license pending proceeding for revocation or other action if the department determines a deficiency is an imminent threat to a patient's health, safety or welfare.

[Statutory Authority: Chapter 71.12 RCW and RCW 43.60.040. 95-22-012, § 246-322-025, filed 10/20/95, effective 11/20/95.]

WAC 246-322-030 Criminal history, disclosure, and background inquiries. (1) The licensee or license applicant shall require a disclosure statement as defined in RCW 43.43.834 for each prospective employee, volunteer, contractor, student, and any other individual associated with the hospital having direct contact with vulnerable adults as defined under RCW 43.43.830.

(2) The license applicant having direct contact with vulnerable adults shall obtain a Washington state patrol criminal history background disclosure statement and submit it to the department with the initial application for licensure.

(3) The licensee or license applicant shall:

(a) Require a Washington state patrol criminal history background inquiry, as specified in RCW 43.43.842(1), from the Washington state patrol or the department of social and health services for each:

(i) Staff person, student, and any other individual currently associated with the hospital having direct contact with vulnerable adults, when engaged on or since July 22, 1989; and

(ii) Prospective staff person, student, and individual applying for association with the hospital prior to allowing the individual direct contact with vulnerable adults, except as allowed by subsection (4) of this section;

(b) Inform each individual identified in (a) of this subsection of the requirement for a background inquiry;

(c) Require the individual to sign an acknowledgement statement that a background inquiry will be made;

(d) Verbally inform the individual of the background inquiry results within seventy-two hours of receipt; and

(e) Offer to provide a copy of the background inquiry results to the individual within ten days of receipt.

(4) The licensee may conditionally employ, contract with, accept as a volunteer or associate, an individual having direct contact with vulnerable adults pending a background inquiry, provided the licensee:

(a) Immediately obtains a disclosure statement from the individual; and

(b) Requests a background inquiry within three business days of the conditional acceptance of the individual.

(5) Except as provided in RCW 43.43.842 and in subsection (4) of this section, a licensee shall not hire or retain, directly or by contract, any individual having direct contact with vulnerable adults, if that individual has been:

(a) Convicted of a crime against individuals as defined in RCW 43.43.830;

(b) Convicted of a crime relating to financial exploitation as defined in RCW 43.43.830;

(c) Found in any disciplinary board final decision to have abused a vulnerable adult under RCW 43.43.830; or

(d) The subject in a protective proceeding under chapter 74.34 RCW.

(6) The licensee shall establish and implement procedures ensuring that all disclosure statements and background inquiry responses are:

(a) Maintained in a confidential and secure manner;

(b) Used for employment purposes only;

(c) Not disclosed to any individual except:

(i) The individual about whom the licensee made the disclosure or background inquiry;

(ii) Authorized state and federal employees; and

(iii) The Washington state patrol auditor; and

(d) Retained and available for department review:

(i) During the individual's employment or association with a facility; and

(ii) At least two years following termination of employment or association with a facility.

(7) The department shall:

(a) Review records required under this section;

(b) Investigate allegations of noncompliance with RCW 43.43.830 through 43.43.842, when necessary, in consultation with law enforcement personnel; and

(c) Use information collected under this section solely for the purpose of determining eligibility for licensure or relicensure as required under RCW 43.43.842.

(8) The department may require licensees to complete additional disclosure statements or background inquiries for an individual associated with the licensed hospital having direct contact with vulnerable adults if the department has reason to believe that offenses specified under RCW 43.43.830 have occurred since completion of the previous disclosure statement or background inquiry.

[Statutory Authority: Chapter 71.12 RCW and RCW 43.60.040. 95-22-012, § 246-322-030, filed 10/20/95, effective 11/20/95.]

WAC 246-322-035 Policies and procedures. (1) The licensee shall develop and implement the following written policies and procedures consistent with this chapter and services provided:

(a) Criteria for admitting and retaining patients;

(b) Methods for assessing each patient's physical and mental health prior to admission;

(c) Providing or arranging for the care and treatment of patients;

(d) Assuring patient rights according to chapters 71.05 and 71.34 RCW, including posting those rights in a prominent place for the patients to read;

(e) Protecting against abuse and neglect and reporting suspected incidents according to the provisions of chapters 71.05, 71.34, 74.34 and 26.44 RCW;

(f) Fire and disaster plans, including;

(i) Accessing patient-occupied sleeping rooms, toilet rooms and bathrooms;

(ii) Summoning internal or external resource agencies or persons, such as a poison center, fire department, and police;

(g) Emergency medical care, including:

(i) Physician orders;

(ii) Staff actions in the absence of a physician; and

(iii) Storing and accessing emergency supplies and equipment;

(h) Managing assaultive, self-destructive, or out-of-control behavior, including:

(i) Immediate actions and conduct;

(ii) Use of seclusion and restraints consistent with WAC 246-322-180 and other applicable state standards; and

(iii) Documenting in the clinical record;

(i) Pharmacy and medication services consistent with WAC 246-322-210;

(j) Infection control as required by WAC 246-322-100;

(k) Staff actions upon:

(i) Patient elopement;

(ii) A serious change in a patient's condition, and immediately notifying family according to chapters 71.05 and 71.34 RCW;

(iii) Accidents or incidents potentially harmful or injurious to patients, and documentation in the clinical record; and

(iv) Patient death;

(l) Smoking on the hospital premises;

(m) Responsibility for patients' personal property, including recording any valuables left on deposit with the hospital;

(n) Allowing patients to work on the premises, according to WAC 246-322-180;

(o) Maintenance and housekeeping functions, including schedules;

(p) Cleaning, inspecting, repairing and calibrating electrical, biomedical and therapeutic equipment, and documenting actions;

(q) Transporting patients for:

(i) Diagnostic or treatment activities;

(ii) Hospital connected business and programs; and

(iii) Medical care services not provided by the hospital;

(r) Transferring patients to other health care facilities or agencies;

(s) Obtaining and retaining criminal history background checks and disclosure statements consistent with WAC 246-322-030.

(t) Research involving patients;

(u) Clinical records consistent with WAC 246-322-200, the Uniform Medical Records Act, chapter 70.02 RCW and Title 42 CFR, chapter 1, Part 2, 10/1/89;

(v) Food service consistent with chapter 246-215 WAC and WAC 246-322-230.

(2) The licensee shall review and update the policies and procedures annually or more often as needed.

[Statutory Authority: Chapter 71.12 RCW and RCW 43.60.040. 95-22-012, § 246-322-035, filed 10/20/95, effective 11/20/95.]

WAC 246-322-040 Governing body and administration. The governing body shall:

(1) Adopt written policies concerning the purposes, operation and maintenance of the hospital, and the safety, care and treatment of patients;

(2) Provide staff, facilities, equipment, supplies and services to meet the needs of patients within the purposes of the hospital;

(3) Establish and maintain a current written organizational plan delineating positions, responsibilities, authorities, and relationships of positions within the hospital;

(4) Appoint an administrator responsible for implementing the policies adopted by the governing body;

(5) Appoint a psychiatrist as medical director responsible for directing and supervising medical treatment and patient care twenty-four hours per day;

(6) Maintain an organized professional staff accountable to the governing body;

(7) Appoint and periodically reappoint the professional staff;

(8) Require and approve professional staff bylaws and rules concerning, at a minimum:

(a) Organization of the professional staff;

(b) Delineation of privileges;

(c) Requirements for membership;

(d) Specific mechanisms for appointing and reappointing members;

(e) Granting, renewing and revising clinical privileges, including temporary ward privileges for community psychiatrists;

(f) Self-government;

(g) Required functions;

(h) Accountability to the governing body; and

(i) Mechanisms to monitor and evaluate quality of care and clinical performance; and

(9) Require that each person admitted to the hospital is under the care of a professional staff member with clinical privileges.

[Statutory Authority: Chapter 71.12 RCW and RCW 43.60.040. 95-22-012, § 246-322-040, filed 10/20/95, effective 11/20/95. Statutory Authority: RCW 43.70.040. 91-02-049 (Order 121), recodified as § 246-322-040, filed 12/27/90, effective 1/31/91. Statutory Authority: Chapter 71.12 RCW. 82-23-003 (Order 1898), § 248-22-011, filed 11/4/82. Statutory Authority: RCW 43.20.050. 81-02-004 (Order 205), § 248-22-011, filed 12/30/80.]

WAC 246-322-050 Staff. The licensee shall:

(1) Employ sufficient, qualified staff to:

(a) Provide adequate patient services;

(b) Maintain the hospital free of safety hazards; and

(c) Implement fire and disaster plans;

(2) Develop and maintain a written job description for the administrator and each staff position;

(3) Maintain evidence of appropriate qualifications and current credentials prior to hiring, or granting or renewing clinical privileges or association of any health care professional;

(4) Verify work references prior to hiring staff;

(5) Assure all patient-care staff including those transporting patients and supervising patient activities, except licensed staff whose professional training exceeds first-responder training, have within thirty days of employment:

(a) Current cardiopulmonary resuscitation cards from instructors certified by the American Red Cross, American Heart Association, United States Bureau of Mines, or Washington state department of labor and industries; and

(b) Current first-aid cards from instructors certified as in (a) of this subsection;

(6) Provide and document orientation and appropriate training for all staff, including:

(a) Organization of the hospital;

(b) Physical layout of hospital, including buildings, departments, exits, and services;

(c) Fire and disaster plans, including monthly drills;

(d) Infection control;

(e) Specific duties and responsibilities;

(f) Policies, procedures, and equipment necessary to perform duties;

(g) Patient rights according to chapters 71.05 and 71.34 RCW and patient abuse;

(h) Managing patient behavior; and

(i) Appropriate training for expected duties;

(7) Make available an ongoing, documented, in-service education program, including but not limited to:

(a) For each staff person, training to maintain and update competencies needed to perform assigned duties and responsibilities; and

(b) For patient care staff, in addition to (a) of this subsection, the following training:

(i) Methods of patient care;

(ii) Using the least restrictive alternatives;

(iii) Managing assaultive and self-destructive behavior;

(iv) Patient rights pursuant to chapters 71.05 and 71.34 RCW;

(v) Special needs of the patient population, such as children, minorities, elderly, and individuals with disabilities;

(vi) Cardiopulmonary resuscitation; and

(vii) First-aid training;

(8) When volunteer services are used within the hospital:

(a) Designate a qualified employee to be responsible for volunteer services;

(b) Provide and document orientation and training according to subsections (6) and (7) of this section for each volunteer; and

(c) Provide supervision and periodic written evaluations of each volunteer working directly with patients;

(9) In addition to following WISHA requirements, protect patients from tuberculosis by requiring each staff person to have upon employment or starting service, and each year thereafter during the individual's association with the hospital:

(a) A tuberculin skin test by the Mantoux method, unless the staff person:

(i) Documents a previous positive Mantoux skin test, which is ten or more millimeters of induration read at forty-eight to seventy-two hours;

(ii) Documents meeting the requirements of this subsection within the six months preceding the date of employment; or

(iii) Provides a written waiver from the department or authorized local health department stating the Mantoux skin test presents a hazard to the staff person's health;

(b) A second test one to three weeks after a negative Mantoux skin test for staff thirty-five years of age or older; and

(c) A chest X ray within seven days of any positive Mantoux skin test;

(10) Report positive chest X rays to the appropriate public health authority, and follow precautions ordered by a physician or public health authority;

(11) Restrict a staff person's contact with patients when the staff person has a known communicable disease in the infectious stage which is likely to be spread in the hospital setting or by casual contact; and

(12) Maintain a record on the hospital premises for each staff person, during employment and for two years following termination of employment, including, but not limited to:

(a) An employment application;

(b) Verification of required education, training and credentials;

(c) Documentation of contacting work references as required by subsection (4) of this section;

(d) Criminal history disclosure and background checks as required in WAC 246-322-030;

(e) Verification of current cardiopulmonary resuscitation, first-aid and HIV/AIDS training;

(f) Tuberculin test results, reports of X-ray findings, exceptions, physician or public health official orders, and waivers; and

(g) Annual performance evaluations.

[Statutory Authority: Chapter 71.12 RCW and RCW 43.60.040. 95-22-012, § 246-322-050, filed 10/20/95, effective 11/20/95. Statutory Authority: RCW 43.70.040. 91-02-049 (Order 121), recodified as § 246-322-050, filed 12/27/90, effective 1/31/91. Statutory Authority: Chapter 71.12 RCW. 82-23-003 (Order 1898), § 248-22-016, filed 11/4/82. Statutory Authority: RCW 43.20.050. 81-02-004 (Order 205), § 248-22-016, filed 12/30/80.]

WAC 246-322-060 HIV/AIDS education and training. The licensee shall:

(1) Verify or arrange appropriate education and training of staff within thirty days of employment on the prevention, transmission, and treatment of human immunodeficiency virus (HIV) and acquired immunodeficiency syndrome (AIDS) consistent with RCW 70.24.310; and

(2) Use infection control standards and educational material consistent with:

(a) The approved curriculum manual *KNOW - HIV/AIDS Prevention Education for Health Care Facility Employees*, January 1991, or subsequent editions published by the department; and

(b) WAC 296-62-08001, Bloodborne pathogens implementing WISHA.

[Statutory Authority: Chapter 71.12 RCW and RCW 43.60.040. 95-22-012, § 246-322-060, filed 10/20/95, effective 11/20/95. Statutory Authority: RCW 43.70.040. 91-02-049 (Order 121), recodified as § 246-322-060, filed 12/27/90, effective 1/31/91. Statutory Authority: RCW 70.24.310. 89-21-038 (Order 3), § 248-22-017, filed 10/12/89, effective 11/12/89.]

WAC 246-322-100 Infection control. The licensee shall:

(1) Establish and implement an effective hospital-wide infection control program, which includes at a minimum:

(a) Written policies and procedures describing:

(i) Types of surveillance used to monitor rates of nosocomial infections;

(ii) Systems to collect and analyze data; and

(iii) Activities to prevent and control infections;

(b) A review process, using definitions and criteria established by the infection control committee, to determine if staff and patient infections are nosocomial;

(c) A system for reporting communicable diseases consistent with chapter 246-100 WAC, Communicable and certain other diseases;

(d) A procedure for reviewing and approving infection control aspects of policies and procedures used in each area of the hospital;

(e) A procedure to monitor the physical environment of the hospital for situations which may contribute to the spread of infectious diseases;

(f) Provisions for:

(i) Providing consultation regarding patient care practices, equipment and supplies which may influence the risk of infection;

(ii) Providing consultation regarding appropriate procedures and products for cleaning, disinfecting and sterilizing;

(iii) Providing infection control information for orientation and in-service education for staff providing direct patient care;

(iv) Making recommendations, consistent with federal, state, and local laws and rules, for methods of safe and sanitary disposal of:

(A) Sewage;

(B) Solid and liquid wastes; and

(C) Infectious wastes including safe management of sharps;

(g) Identifying specific precautions to prevent transmission of infections; and

(h) Coordinating employee activities to control exposure and transmission of infections to or from employees and others performing patient services;

(2) Assign one or more individuals to manage the infection control program with documented qualifications related to infection surveillance, prevention, and control, including:

(a) Education;

(b) Training;

(c) Certification; or

(d) Supervised experience;

(3) Designate an infection control committee, comprised of the individual or individuals assigned to manage the program and multidisciplinary representatives from the professional staff, nursing staff and administrative staff, to:

(a) Oversee the program;

(b) Develop a committee-approved description of the program, including surveillance, prevention, and control activities;

(c) Delegate authority, approved in writing by administrative and professional staff, to institute surveillance, prevention, and control measures when there is reason to believe any patient or staff may be at risk of infection;

(d) Meet at regularly scheduled intervals, at least quarterly;

(e) Maintain written minutes and reports of findings presented during committee meetings; and

(f) Develop a method for forwarding recommendations to the professional staff, nursing, administration, and other committees and departments as appropriate.

[Statutory Authority: Chapter 71.12 RCW and RCW 43.60.040. 95-22-012, § 246-322-100, filed 10/20/95, effective 11/20/95. Statutory Authority: RCW 43.70.040. 91-02-049 (Order 121), recodified as § 246-322-100, filed 12/27/90, effective 1/31/91. Statutory Authority: Chapter 71.12 RCW. 83-10-079 (Order 1960), § 248-22-036, filed 5/4/83; 82-23-003 (Order 1898), § 248-22-036, filed 11/4/82. Statutory Authority: RCW 43.20.050. 81-02-004 (Order 205), § 248-22-036, filed 12/30/80.]

WAC 246-322-120 Physical environment. The licensee shall:

(1) Provide a safe and clean environment for patients, staff and visitors;

(2) Provide ready access and equipment to accommodate individuals with physical and mental disabilities;

(3) Provide adequate lighting in all areas;

(4) Provide natural or mechanical ventilation sufficient to remove odors, smoke, excessive heat and condensation from all habitable rooms;

(5) Provide a heating system operated and maintained to sustain a comfortable, healthful temperature in all habitable rooms;

(6) Provide an adequate supply of hot and cold running water under pressure meeting the standards in chapters 246-290 and 246-291 WAC, with:

(a) Devices to prevent backflow into the potable water supply system; and

(b) Water temperature not exceeding 120°F automatically regulated at all plumbing fixtures used by patients;

(7) Implement current, written policies, procedures, and schedules for maintenance and housekeeping functions;

(8) Provide housekeeping and service facilities on each floor, including:

(a) One or more service sinks, designed for filling and emptying mop buckets;

(b) Housekeeping closets:

(i) Equipped with shelving;

(ii) Ventilated to the out-of-doors; and

(iii) Kept locked; and

(c) A utility service area designed and equipped for washing, disinfecting, storing, and housing medical and nursing supplies and equipment; and

(9) Provide equipment and facilities to collect and dispose of all sewage, garbage, refuse and liquid waste in a safe and sanitary manner.

[Statutory Authority: Chapter 71.12 RCW and RCW 43.60.040. 95-22-012, § 246-322-120, filed 10/20/95, effective 11/20/95. Statutory Authority: RCW 43.70.040. 91-02-049 (Order 121), recodified as § 246-322-120, filed 12/27/90, effective 1/31/91. Statutory Authority: Chapter 71.12 RCW. 82-23-003 (Order 1898), § 248-22-046, filed 11/4/82. Statutory Authority: RCW 43.20.050. 81-02-004 (Order 205), § 248-22-046, filed 12/30/80.]

WAC 246-322-140 Patient living areas. The licensee shall:

(1) Provide patient sleeping rooms with:

(a) A minimum of eighty square feet of useable floor space in a single bedroom;

(b) A minimum of seventy square feet of useable floor space per bed in a multipatient room;

(c) A minimum ceiling height of seven feet six inches over the required floor area;

(d) A maximum capacity of four patients;

(e) A floor elevation no lower than three feet six inches below grade, with grade extending horizontally ten or more feet from the building;

(f) A clear window area on an outside wall equal to or greater than one-tenth the floor area with a minimum of ten square feet;

(g) Only security or maximum security windows;

(h) Direct access to and from a corridor, common-use activity room, or other common-use area;

(i) Sufficient room furnishings maintained in safe and clean condition including:

(i) A bed for each patient at least thirty-six inches wide or appropriate to the special needs and size of the patient;

(ii) A cleanable, firm mattress; and

(iii) A cleanable or disposable pillow; and

(j) At least three feet between beds, and adequate space between furnishings to allow easy entrance, exit, and traffic flow within the room;

(k) A means to assure patient privacy when appropriate;

(2) Provide, in addition to the requirements in subsection (1) of this section, when security rooms are used:

(a) Security or maximum security windows appropriate to the area and program;

(b) Furnishings, equipment and design for maximum safety and security;

(c) Shielded and tamper-resistant lighting fixtures and electrical outlets;

(d) A door lockable from the outside; and

(e) Provisions for authorized staff to observe occupants;

(3) Provide an enclosed space within the patient sleeping room, or nearby, suitable for each patient to hang garments, and store clothing and personal belongings;

(4) Provide secure storage for each patient's valuables in the patient sleeping room or conveniently available elsewhere in the hospital;

(5) Provide a dining area for patients in a community setting with furnishings appropriate for dining;

(6) Provide and maintain a safe area or areas for patient recreation and physical activity equal to or greater than twenty square feet for each licensed bed space;

(7) Provide a visiting area allowing privacy for patients and visitors;

(8) Provide a readily available telephone for patients to make and receive confidential calls; and

(9) Provide a "nonpay" telephone or equivalent communication device readily accessible on each patient occupied floor for emergency use.

[Statutory Authority: Chapter 71.12 RCW and RCW 43.60.040. 95-22-012, § 246-322-140, filed 10/20/95, effective 11/20/95.]

WAC 246-322-150 Clinical facilities. The licensee shall provide:

(1) An adequate number of counseling or treatment rooms for group or individual therapy programs with reasonable soundproofing to maintain confidentiality;

(2) One or more seclusion rooms, with or without an exterior window, intended for short-term occupancy, with:

(a) Staff-controlled locks and relites in the door, or equivalent;

(b) Provisions for authorized staff to observe the occupant at all times;

(c) A minimum of eighty square feet of floor space, exclusive of fixed equipment, with a minimum room dimension of eight feet; and

(d) Shielded, tamper-proof lighting fixtures;

(3) One or more physical examination rooms, with or without an exterior window, equipped with:

(a) An examination table;

(b) Examination light;

(c) Storage for medical supplies and equipment; and

(d) A readily accessible handwashing sink, soap dispenser, and acceptable single-use hand-drying device; and

(4) Secure areas to properly store and handle medical supplies and medications.

[Statutory Authority: Chapter 71.12 RCW and RCW 43.60.040. 95-22-012, § 246-322-150, filed 10/20/95, effective 11/20/95.]

WAC 246-322-160 Bathrooms, toilet rooms and handwashing sinks. The licensee shall provide:

(1) One toilet, handwashing sink and bathing fixture for each six patients, or fraction thereof, on each patient-occupied floor of the hospital, with:

(a) Provisions for privacy during toileting, bathing, showering, and dressing;

(b) Separate toilet rooms for each sex if the toilet room contains more than one toilet;

(c) Separate bathrooms for each sex if the bathroom contains more than one bathing fixture; and

(d) One or more grab bars at each toilet and bathing fixture appropriate to the needs of patients; and

(2) Toilet rooms and bathrooms directly accessible from patient rooms or corridors, without passing through any kitchen, pantry, food preparation, food storage, or dishwashing area or from one bedroom through another bedroom.

[Statutory Authority: Chapter 71.12 RCW and RCW 43.60.040. 95-22-012, § 246-322-160, filed 10/20/95, effective 11/20/95.]

WAC 246-322-170 Patient care services. (1) The licensee shall:

(a) Provide an initial physical and mental health assessment by a physician, advanced registered nurse practitioner, or physician assistant. The initial mental status exam may be conducted by a mental health professional;

(b) Admit only those patients for whom the hospital is qualified by staff, services and equipment to give adequate care; and

(c) Provide appropriate transfer and acceptance of a patient needing medical care services not provided by the hospital, by:

(i) Transferring relevant data with the patient;

(ii) Obtaining written or verbal approval by the receiving facility prior to transfer; and

(iii) Immediately notifying the patient's family.

(2) The licensee shall provide medical supervision and treatment, transfer, and discharge planning for each patient admitted or retained, including but not limited to:

(a) Admittance by a member of the medical staff as defined by the staff bylaws;

(b) An initial treatment plan upon admission incorporating any advanced directives of the patient;

(c) A physical examination and medical history completed and recorded by a physician, advanced registered nurse practitioner, or physician assistant within twenty-four hours following admission, unless the patient had a physical examination and medical history completed within fourteen days prior to admission, and the information is recorded in the clinical record;

(d) A psychiatric evaluation, including provisional diagnosis, completed and documented within seventy-two hours following admission;

(e) A comprehensive treatment plan developed within seventy-two hours following admission:

(i) Developed by a multidisciplinary treatment team with input, when appropriate, by the patient, family, and other agencies;

(ii) Reviewed and modified by a mental health professional as indicated by the patient's clinical condition;

(iii) Interpreted to staff, patient, and, when possible and appropriate, to family; and

(iv) Implemented by persons designated in the plan;

(f) Physician orders for drug prescriptions, medical treatments and discharge;

(g) Current written policies and orders signed by a physician to guide the action of staff when medical emergencies or threat to life arise and a physician is not present;

(h) A discharge plan including a review of the patient's hospitalization, condition upon discharge, and recommendations for follow-up and continuing care;

(i) Patient education pertaining to the patient's illness, prescribed medications, and health maintenance; and

(j) Referrals to appropriate resources and community services during and after hospitalization.

(3) The licensee shall provide, or arrange for, diagnostic and therapeutic services prescribed by the attending professional staff, including:

(a) Medical services, including:

(i) A physician on call at all times; and

(ii) Provisions for emergency medical services when needed;

(b) Psychiatric services, including:

(i) A staff psychiatrist available for consultation daily and visits as necessary to meet the needs of each patient; and

(ii) A child psychiatrist for regular consultation when hospital policy permits the admission of children or adolescents;

(c) Nursing services, including:

(i) A psychiatric nurse, employed full time, responsible for directing nursing services twenty-four hours per day; and

(ii) One or more registered nurses on duty within the hospital at all times to supervise nursing care;

(d) Social work services coordinated and supervised by a social worker with experience working with psychiatric patients, responsible for:

(i) Reviewing social work activities;

(ii) Integrating social work services into the comprehensive treatment plan; and

(iii) Coordinating discharge with community resources;

(e) Psychological services coordinated and supervised by a psychologist with experience working with psychiatric patients;

(f) Occupational therapy services coordinated and supervised by an occupational therapist with experience working with psychiatric patients, responsible for integrating occupational therapy functions into the patient's comprehensive treatment plan;

(g) Recreational therapy services coordinated and supervised by a recreational or occupational therapist with experience working with psychiatric patients, responsible for integrating recreational therapy functions into the comprehensive treatment plan; and

(h) Special services, within the hospital or contracted outside the hospital, as specified in the comprehensive treatment plan.

[Statutory Authority: Chapter 71.12 RCW and RCW 43.60.040. 95-22-012, § 246-322-170, filed 10/20/95, effective 11/20/95.]

WAC 246-322-180 Patient safety and seclusion care. (1) The licensee shall assure seclusion and restraint are used only to the extent and duration necessary to ensure the safety of patients, staff, and property, as follows:

(a) Staff shall not inflict pain or use restraint and seclusion for retaliation or personal convenience;

(b) Staff shall document all assaultive incidents in the clinical record and review each incident with the appropriate supervisor;

(c) Staff shall observe any patient in restraint or seclusion at least every fifteen minutes, intervening as necessary, and recording observations and interventions in the clinical record;

(d) Staff shall notify, and receive authorization by, a physician within one hour of initiating patient restraint or seclusion;

(e) A physician shall examine each restrained or secluded patient and renew the order for every twenty-four continuous hours of restraint and seclusion; and

(f) A mental health professional or registered nurse shall evaluate the patient when secluded or restrained more than two continuous hours, and reevaluate the patient at least once every eight continuous hours of restraint and seclusion thereafter.

(2) The licensee shall provide adequate emergency supplies and equipment, including airways, bag resuscitators, intravenous fluids, oxygen, sterile supplies, and other equipment identified in the policies and procedures, easily accessible to patient-care staff.

(3) When research is proposed or conducted involving patients, the licensee shall:

(a) Document an initial and continuing review process by a multidisciplinary treatment team;

(b) Require approval by the patient prior to participation;

(c) Allow the patient to discontinue participation at any time; and

(d) Ensure policies and procedures are in accordance with Title 42 Code of Federal Regulations, chapter 1, Part 2, 10/1/89 edition.

(4) The licensee shall prohibit the use of any patient for basic maintenance of the hospital or equipment, housekeeping, or food service in compliance with the Federal Fair Labor Standards Act, 29 USC, paragraph 203 et al., and 29 CFR, section 525 et al., except:

(a) Cleaning or maintaining the patient's private living area, or performing personal housekeeping chores; or

(b) Performing therapeutic activities:

(i) Included in and appropriate to the comprehensive treatment plan;

(ii) As agreed to with the patient;

(iii) Documented as part of the treatment program; and

(iv) Appropriate to the age, physical, and mental condition of the patient.

(5) The licensee shall assure the safety and comfort of patients when construction work occurs in or near occupied areas.

[Statutory Authority: Chapter 71.12 RCW and RCW 43.60.040. 95-22-012, § 246-322-180, filed 10/20/95, effective 11/20/95.]

WAC 246-322-190 Provisions for patients with tuberculosis. A licensee providing inpatient services for mentally ill patients with suspected or known infectious tuberculosis shall:

(1) Design patient rooms with:

(a) Ventilation to maintain a negative pressure condition in each patient room relative to adjacent spaces, except bath and toilet areas, with:

(i) Air movement or exhaust from the patient room to the out-of-doors with the exhaust grille located over the head of the bed;

(ii) Exhaust at the rate of six air changes per hour;

(iii) Make-up or supply air from adjacent ventilated spaces for four or less air changes per hour, and tempered outside air for two or more air changes per hour; and

(iv) Ultraviolet generator irradiation as follows:

(A) Use of ultraviolet fluorescent fixtures with lamps emitting wave length of 253.7 nanometers;

(B) The average reflected irradiance less than 0.2 microwatts per square centimeter in the room at the five foot level;

(C) Wall-mount type of fixture installed over the head of the bed, as close to the ceiling as possible to irradiate the area of the exhaust grille and the ceiling; and

(D) Lamps changed as recommended by the manufacturer; and

(b) An adjoining bathroom and toilet room with bedpan washer; and

(2) Provide discharge information to the health department of the patient's county of residence.

[Statutory Authority: Chapter 71.12 RCW and RCW 43.60.040. 95-22-012, § 246-322-190, filed 10/20/95, effective 11/20/95.]

WAC 246-322-200 Clinical records. (1) The licensee shall establish and maintain an organized clinical record service, consistent with recognized principles of record management, directed, staffed, and equipped to:

(a) Ensure timely, complete and accurate identification, checking, processing, indexing, filing, and retrieval of records;

(b) Facilitate compilation, maintenance, analyses, and distribution of patient care statistics; and

(c) Protect records from undue deterioration and destruction.

(2) The licensee shall develop and maintain an individual clinical record for each person receiving care, treatment, or diagnostic service at the hospital.

(3) The licensee shall ensure prompt entry and filing of the following data into the clinical record for each period a patient receives inpatient or outpatient services:

(a) Identifying information;

(b) Assessment and diagnostic data including history of findings and treatment provided for the psychiatric condition for which the patient is treated in the hospital;

(c) Psychiatric evaluation including:

(i) Medical and psychiatric history and physical examination; and

(ii) Record of mental status;

(d) Comprehensive treatment plan;

(e) Authenticated orders for:

(i) Drugs or other therapies;

(ii) Therapeutic diets; and

(iii) Care and treatment, including standing medical orders used in the care and treatment of the patient, except standing medical emergency orders;

(f) Significant observations and events in the patient's clinical treatment;

(g) Any restraint of the patient;

(h) Data bases containing patient information;

(i) Original reports or durable, legible, direct copies of original reports, of all patient tests, diagnostic procedures and examinations performed on or for the patient;

(j) Description of therapies administered, including drug therapies;

(k) Nursing services;

(l) Progress notes recorded by the professional staff responsible for the care of the patient or others significantly involved in active treatment modalities; and

(m) A discharge plan and discharge summary.

(4) The licensee shall ensure each entry includes:

(a) Date;

(b) Time of day;

(c) Authentication by the individual making the entry; and

(d) Diagnosis, abbreviations and terminology consistent with:

(i) Fourth edition revised 1994 *The American Psychiatry Association Diagnostic and Statistical Manual of Mental Disorders*; and

(ii) *International Classification of Diseases, 9th edition, 1988*.

(5) The licensee shall provide designated areas, designed to assure confidentiality, for reading, recording, and maintaining patient clinical records and for patients to review their own records.

(6) The licensee shall share and release information relating to patients and former patients only as authorized by statute and administrative code, and shall protect patient confidentiality according to confidentiality requirements in chapters 70.02, 71.05, and 71.34 RCW.

(7) The licensee shall retain and preserve:

(a) Each patient's clinical records, excluding reports on referred outpatient diagnostic services, for:

(i) Adult patients, a minimum of ten years following the most recent discharge; or

(ii) Patients who are minors at the time of care, treatment, or diagnosis, a minimum of three years following the patient's eighteenth birth date, or ten years following the most recent discharge, whichever is longer;

(b) Reports on referred outpatient diagnostic services for at least two years;

(c) A master patient index card or equivalent for at least the same period of time as the corresponding clinical records; and

(d) Patients' clinical records, registers, indexes, and analyses of hospital service in original form or in photographic form in accordance with the provisions of chapter 5.46 RCW.

[Statutory Authority: Chapter 71.12 RCW and RCW 43.60.040. 95-22-012, § 246-322-200, filed 10/20/95, effective 11/20/95.]

WAC 246-322-210 Pharmacy and medication services. The licensee shall:

(1) Maintain the pharmacy in the hospital in a safe, clean, and sanitary condition;

(2) Provide evidence of current approval of pharmacy services by the Washington state board of pharmacy under chapter 18.64 RCW;

(3) Develop and implement procedures for prescribing, storing, and administering medications according to state and federal laws and rules, including:

(a) Assuring professional staff who prescribe are authorized to prescribe under chapter 69.41 RCW;

(b) Assuring orders and prescriptions for medications administered and self-administered include:

(i) Date and time;

(ii) Type and amount of drug;

(iii) Route of administration;

(iv) Frequency of administration; and

(v) Authentication by professional staff;

(c) Administering drugs;

(d) Self-administering drugs;

(e) Receiving and recording or transcribing verbal or telephone drug orders by authorized staff;

(f) Authenticating verbal and telephone orders by prescriber in a timely manner, not to exceed forty-eight hours for inpatients;

(g) Use of medications and drugs owned by the patient but not dispensed by the hospital pharmacy, including:

(i) Specific written orders;

(ii) Identification and administration of drug;

(iii) Handling, storage and control;

(iv) Disposition; and

(v) Pharmacist and physician inspection and approval prior to patient use to ensure proper identification, lack of deterioration, and consistency with current medication profile;

(h) Maintaining drugs in patient care areas of the hospital including:

(i) Hospital pharmacist or consulting pharmacist responsibility;

(ii) Legible labeling with generic and/or trade name and strength as required by federal and state laws;

(iii) Access only by staff authorized access under hospital policy;

(iv) Storage under appropriate conditions specified by the hospital pharmacist or consulting pharmacist, including provisions for:

(A) Storing medicines, poisons, and other drugs in a specifically designated, well-illuminated, secure space;

(B) Separating internal and external stock drugs; and

(C) Storing Schedule II drugs in a separate locked drawer, compartment, cabinet, or safe;

(i) Preparing drugs in designated rooms with ample light, ventilation, sink or lavatory, and sufficient work area;

(j) Prohibiting the administration of outdated or deteriorated drugs, as indicated by label;

(k) Restricting access to pharmacy stock of drugs to:

(i) Legally authorized pharmacy staff; and

(ii) Except for Schedule II drugs, to a registered nurse designated by the hospital when all of the following conditions are met:

(A) The pharmacist is absent from the hospital;

(B) Drugs are needed in an emergency, and are not available in floor supplies; and

(C) The registered nurse, not the pharmacist, is accountable for the registered nurse's actions;

(4) The appropriate professional staff committee shall approve all policies and procedures on drugs, after documented consultation with:

(a) The pharmacist or pharmacist consultant directing hospital pharmacy services; and

(b) An advisory group comprised of representatives from the professional staff, hospital administration, and nursing services;

(5) When planning new construction of a pharmacy:

(a) Follow the general design requirements for architectural components, electrical service, lighting, call systems, hardware, interior finishes, heating, plumbing, sewerage, ventilation/air conditioning, and signage in WAC 246-318-540;

(b) Provide housekeeping facilities within or easily accessible to the pharmacy;

(c) Locate pharmacy in a clean, separate, secure room with:

(i) Storage, including locked storage for Schedule II controlled substances;

(ii) All entrances equipped with closers;

(iii) Automatic locking mechanisms on all entrance doors to preclude entrance without a key or combination;

(iv) Perimeter walls of the pharmacy and vault, if used, constructed full height from floor to ceiling;

(v) Security devices or alarm systems for perimeter windows and relites;

(vi) An emergency signal device to signal at a location where twenty-four-hour assistance is available;

(vii) Space for files and clerical functions;

(viii) Break-out area separate from clean areas; and

(ix) Electrical service including emergency power to critical pharmacy areas and equipment;

(d) Provide a general compounding and dispensing unit, room, or area with:

(i) A work counter with impermeable surface;

(ii) A corrosion-resistant sink, suitable for handwashing, mounted in counter or integral with counter;

(iii) Storage space;

(iv) A refrigeration and freezing unit; and

(v) Space for mobile equipment;

(e) If planning a manufacturing and unit dose packaging area or room, provide with:

(i) Work counter with impermeable surface;

(ii) Corrosion-resistant sink, suitable for handwashing, mounted in counter or integral with counter; and

(iii) Storage space;

(f) Locate admixture, radiopharmaceuticals, and other sterile compounding room, if planned, in a low traffic, clean area with:

(i) A preparation area;

(ii) A work counter with impermeable surface;

(iii) A corrosion-resistant sink, suitable for handwashing, mounted in counter or integral with counter;

(iv) Space for mobile equipment;

(v) Storage space;

(vi) A laminar flow hood in admixture area; and

(vii) Shielding and appropriate ventilation according to WAC 246-318-540 (3)(m) for storage and preparation of radiopharmaceuticals;

(g) If a satellite pharmacy is planned, comply with the provisions of:

(i) Subsection (5)(a), (5)(c)(i), (ii), (iii), (iv), (v), and (vi) of this section when drugs will be stored;

(ii) Subsection (5)(c)(vii), (viii), and (ix) of this section, if appropriate; and

(iii) Subsections (5)(d) and (f) of this section if planned;

(h) If a separate outpatient pharmacy is planned, comply with the requirements for a satellite pharmacy including:

(i) Easy access;

(ii) A conveniently located toilet meeting accessibility requirements in WAC 51-20-3100; and

(iii) A private counseling area.

[Statutory Authority: Chapter 71.12 RCW and RCW 43.60.040. 95-22-012, § 246-322-210, filed 10/20/95, effective 11/20/95.]

WAC 246-322-220 Laboratory services. The licensee shall:

(1) Provide access to laboratory services to meet emergency and routine needs of patients;

(2) Ensure laboratory services are provided by licensed or waivered medical test sites in accordance with chapter 70.42 RCW and chapter 246-338 WAC; and

(3) Maintain each medical test site in the hospital in a safe, clean, and sanitary condition.

[Statutory Authority: Chapter 71.12 RCW and RCW 43.60.040. 95-22-012, § 246-322-220, filed 10/20/95, effective 11/20/95.]

WAC 246-322-230 Food and dietary services. The licensee shall:

(1) Comply with chapters 246-215 and 246-217 WAC, food service;

(2) Designate an individual responsible for managing and supervising dietary/food services twenty-four hours per day, including:

(a) Incorporating ongoing recommendations of a dietitian;

(b) Serving at least three meals a day at regular intervals with fifteen or less hours between the evening meal and breakfast, unless the licensee provides a nutritious snack between the evening meal and breakfast;

(c) Providing well-balanced meals and nourishments that meet the current recommended dietary allowances of the *National Research Council*, 10th edition, 1989, adjusted for patient age, sex and activities unless contraindicated;

(d) Making nourishing snacks available as needed for patients, and posted as part of the menu;

(e) Preparing and serving therapeutic diets according to written medical orders;

(f) Preparing and serving meals under the supervision of food service staff;

(g) Maintaining a current diet manual, approved in writing by the dietitian and medical staff, for use in planning and preparing therapeutic diets;

(h) Ensuring all menus:

(i) Are written at least one week in advance;

(ii) Indicate the date, day of week, month and year;

(iii) Include all foods and snacks served that contribute to nutritional requirements;

(iv) Provide a variety of foods;

(v) Are approved in writing by the dietitian;

(vi) Are posted in a location easily accessible to all patients; and

(vii) Are retained for one year;

(3) Substitute foods, when necessary, of comparable nutrient value and record changes on the menu;

(4) Allow sufficient time for patients to consume meals;

(5) Ensure staff from dietary/food services are present in the hospital during all meal times;

(6) Keep policies and procedures pertaining to food storage, preparation, and storage, and cleaning food service equipment and work areas in the food service area for easy reference by dietary staff at all times.

[Statutory Authority: Chapter 71.12 RCW and RCW 43.60.040. 95-22-012, § 246-322-230, filed 10/20/95, effective 11/20/95.]

WAC 246-322-240 Laundry. The licensee shall provide:

(1) Laundry and linen services, on the premises or by commercial laundry;

(2) Storage and sorting areas for soiled laundry in well-ventilated areas, separate from clean linen handling areas;

(3) A clean area with an adequate supply of clean linen;

(4) When laundry is washed on the premises:

(a) An adequate water supply and a minimum water temperature of 140°F in washing machines; and

(b) Laundry facilities in areas separate from food preparation and dining; and

(5) Facilities for patients who wear their own clothing during hospitalization to do personal laundry.

[Statutory Authority: Chapter 71.12 RCW and RCW 43.60.040. 95-22-012, § 246-322-240, filed 10/20/95, effective 11/20/95.]

WAC 246-322-250 Construction. (1) The applicant or licensee shall comply with chapter 31 of the Washington State Building Code for all construction.

(2) Prior to starting construction, the applicant or licensee shall submit the following documentation to the department:

(a) A completed application form, a copy of which is provided in the *Submissions Guide for Health and Residential Facility Construction Projects*, which may be obtained from the department;

(b) The fee specified in chapter 246-314 WAC;

(c) A functional program which describes the services and operational methods affecting the hospital building, premises, and patients;

(d) One set of preliminary documents including, when applicable:

(i) Plot plans drawn to scale showing:

(A) Streets, driveways, parking, vehicle and pedestrian circulation;

(B) Site utilities, water service system, sewage disposal system, electrical service system, elevations; and

(C) Location of existing and new buildings and other fixed equipment;

(ii) Building plans drawn to scale showing:

(A) Floor plans designating function of each room and fixed equipment;

(B) Typical building sections and exterior elevations;

(iii) Outline specifications generally describing the construction and materials including mechanical and electrical systems; and

(e) Three sets of final construction drawings, stamped by a Washington state licensed architect or engineer, complying with the requirements of this chapter including, when applicable:

(i) Plot plans drawn to scale showing all items required in the preliminary plan in final form;

(ii) Building plans drawn to scale showing:

(A) Floor plans designating function of each room and fixed equipment;

(B) Interior and exterior elevations;

(C) Building sections and construction details;

(D) Schedules of room finishes, doors, finish hardware and windows;

(E) Mechanical, including plumbing, heating, venting and air conditioning; and

(F) Electrical, including lighting, power and communication systems; and

(iii) Specifications fully describing the workmanship and finishes;

(f) One copy of specifications and the radiant panel test report for each carpet type used in corridors and exitways;

(g) Three copies of fire sprinkler system shop drawings, hydraulic calculations and equipment specifications, stamped by the fire sprinkler contractor; and

(h) Three copies of fire alarm system shop drawings and equipment specifications.

(3) The licensee shall:

(a) Obtain department approval of final construction documents prior to starting construction;

(b) Conform with the approved plans during construction;

(c) Consult with the department prior to deviating from approved documents;

(d) Provide a written construction project completion notice to the department indicating:

(i) The expected completion date; and

(ii) Compliance with the approved construction documents, requirements of chapter 18.20 RCW and this chapter;

(e) Make adequate provisions for the health, safety, and comfort of patients during construction projects;

(f) Obtain authorization from the department prior to occupying or using new construction; and

(g) Obtain approval of the Washington state fire protection services division prior to construction, modification, and alteration consistent with RCW 18.20.130.

[Statutory Authority: Chapter 71.12 RCW and RCW 43.60.040. 95-22-012, § 246-322-250, filed 10/20/95, effective 11/20/95.]

WAC 246-322-500 Exemptions. (1) A licensee wishing to request an exemption from a requirement in this chapter shall submit a written request to the department, including:

(a) A description of the requested exemption;

(b) Reason for the exemption; and

(c) Impact of the exemption on patient or public health and safety.

(2) If the department determines the exemption will not jeopardize patient or public health or safety, and is not contrary to the intent of chapter 71.12 RCW and this chapter, the department may:

(a) Exempt the licensee from meeting a specific requirement in this chapter; or

(b) Allow the licensee to use another method of meeting the requirement.

(3) The licensee shall retain a copy of each approved exemption in the hospital.

[Statutory Authority: Chapter 71.12 RCW and RCW 43.60.040. 95-22-012, § 246-322-500, filed 10/20/95, effective 11/20/95.]

WAC 246-322-990 Private psychiatric hospital fees. This section establishes the licensure fees for private psychiatric hospitals licensed under chapter 71.12 RCW.

(1) Applicants and licensees shall:

(a) Submit an annual fee of seventy dollars and zero cents for each bed space within the licensed bed capacity of the hospital to the department;

(b) Include all bed spaces and rooms complying with physical plant and movable equipment requirements of this chapter for twenty-four-hour assigned patient rooms;

(c) Include bed spaces assigned for less than twenty-four-hour patient use as part of the licensed bed capacity when:

(i) Physical plant requirements of this chapter are met without movable equipment; and

(ii) The private psychiatric hospital currently possesses the required movable equipment and certifies this fact to the department;

(d) Limit licensed bed spaces as required under chapter 70.38 RCW;

(e) Submit applications for bed additions to the department for review and approval under chapter 70.38 RCW subsequent to department establishment of the private psychiatric hospital's licensed bed capacity;

(f) Set up twenty-four-hour assigned patient beds only within the licensed bed capacity approved by the department.

(2) Refunds. The department shall refund fees paid by the applicant for initial licensure if:

(a) The department has received the application but has not conducted an on-site survey or provided technical assistance, the department will refund two-thirds of the fees paid, less a fifty dollar processing fee.

(b) The department has received the application and has conducted an on-site survey or provided technical assistance, the department will refund one-third of the fees paid, less a fifty dollar processing fee.

(c) The department will not refund fees if:

(i) The department has performed more than one on-site visit for any purpose;

(ii) One year has elapsed since an initial licensure application is received by the department, and the department has not issued the license because the applicant has failed to complete requirements for licensure; or

(iii) The amount to be refunded as calculated by (a) or (b) of this subsection is ten dollars or less.

[Statutory Authority: RCW 43.70.250. 07-17-174, § 246-322-990, filed 8/22/07, effective 9/22/07; 05-18-073, § 246-322-990, filed 9/7/05, effective 10/8/05. Statutory Authority: RCW 43.70.250, 18.46.030, 43.70.110, 71.12.470. 04-19-141, § 246-322-990, filed 9/22/04, effective 10/23/04. Statutory Authority: RCW 43.70.250 and 70.38.105(5). 03-22-020, § 246-322-990, filed 10/27/03, effective 11/27/03. Statutory Authority: RCW 43.70.250. 02-13-061, § 246-322-990, filed 6/14/02, effective 7/15/02. Statutory Authority: RCW 71.12.470, 43.70.110 and 43.70.250. 01-15-092, § 246-322-990, filed 7/18/01, effective 8/18/01. Statutory Authority: RCW 43.70.250 and 43.20B.020. 99-24-060, § 246-322-990, filed 11/29/99, effective 12/30/99. Statutory Authority: RCW 43.70.250, 43.70.110 and 43.20B.020. 95-12-097, § 246-322-990, filed 6/7/95, effective 7/8/95. Statutory Authority: RCW 43.70.250. 92-12-028 (Order 273), § 246-322-990, filed 5/28/92, effective 6/28/92. Statutory Authority: RCW 43.70.040. 91-02-050 (Order 122), § 246-322-990, filed 12/27/90, effective 1/31/91.]

Chapter 246-324 WAC

PRIVATE ALCOHOL AND CHEMICAL DEPENDENCY HOSPITALS

WAC

246-324-010	Definitions.
246-324-020	Licensure—Initial, renewal, modifications.
246-324-025	Responsibilities and rights—Licensee and department.
246-324-030	Criminal history, disclosure, and background inquiries.
246-324-035	Policies and procedures.
246-324-040	Governing body and administration.
246-324-050	Staff.
246-324-060	HIV/AIDS education and training.
246-324-100	Infection control.
246-324-120	Physical environment.
246-324-140	Patient living areas.
246-324-150	Clinical facilities.
246-324-160	Bathrooms, toilet rooms and handwashing sinks.
246-324-170	Patient care services.
246-324-180	Patient safety.
246-324-190	Provisions for patients with tuberculosis.
246-324-200	Clinical records.
246-324-210	Pharmacy and medication services.
246-324-220	Laboratory services.
246-324-230	Food and dietary services.
246-324-240	Laundry.
246-324-250	Construction.
246-324-500	Exemptions.
246-324-990	Fees.

DISPOSITION OF SECTIONS FORMERLY CODIFIED IN THIS CHAPTER

246-324-001 Purpose and scope. [Statutory Authority: Chapter 71.12 RCW and RCW 43.60.040. 95-22-013, § 246-324-001, filed 10/20/95, effective 11/20/95.] Repealed by 97-20-101, filed 9/29/97, effective 10/30/97. Statutory Authority: RCW 43.70.040.

WAC 246-324-010 Definitions. For the purpose of this chapter, the following words and phrases shall have the following meanings unless the context clearly indicates otherwise.

(1) "Abuse" means an act by any individual which injures, exploits or in any way jeopardizes a patient's health, welfare, or safety, including but not limited to:

(a) Physically damaging or potentially damaging nonaccidental acts;

(b) Emotionally damaging verbal behavior and harassment or other actions which may result in emotional or behavioral problems; and

(c) Sexual use, exploitation and mistreatment through inappropriate touching, inappropriate remarks or encouraging participation in pornography or prostitution.

(2) "Administrator" means the individual responsible for the day-to-day operation of the hospital.

(3) "Advanced registered nurse practitioner" means a registered nurse authorized to practice specialized and advanced nursing according to the requirements in RCW 18.88.175.

(4) "Alcoholism" means a chronic, progressive, potentially fatal disease characterized by tolerance and physical dependency, or pathological organic changes, or both, as consequences of alcohol ingestion.

(a) "Chronic and progressive" means the physical, emotional and social changes that develop are cumulative and progress as alcohol ingestion continues;

(b) "Tolerance" means physiological adaptation to the presence of a high concentration of alcohol; and

(c) "Physical dependency" means withdrawal symptoms occur from decreasing or ceasing ingestion of alcohol.

(5) "Authenticate" means to authorize or validate an entry in a record by:

(a) A signature including first initial, last name, and professional title/discipline; or

(b) A unique identifier which clearly indicates the responsible individual.

(6) "Bathing fixture" means a bathtub, shower, or combination bathtub shower.

(7) "Bathroom" means a room containing one or more bathing fixtures.

(8) "Chemical dependency counselor" means an individual who:

(a) Is licensed, certified, or registered as a counselor under chapter 18.19 RCW or possesses a written statement of exemption from this requirement from the department; and

(b) Meets the minimum qualifications in WAC 275-19-145.

(9) "Clinical record" means a file maintained by the licensee for each patient containing all pertinent medical and clinical information.

(10) "Comprehensive treatment plan" means a written plan of care developed by a multidisciplinary treatment team for an individual patient, based on an assessment of the patient's developmental, biological, emotional, psychological, and social strengths and needs, which includes:

(a) Treatment goals with specific time frames;

(b) Specific services to be provided;

(c) The name of each individual responsible for each service provided; and

(d) Discharge criteria with estimated time frames.

(11) "Construction" means:

(a) A new building to be used as a hospital or part of a hospital;

(b) An addition, modification or alteration which changes the approved use of a room or area; and

(c) An existing building or portion thereof to be converted for use as a hospital.

(12) "Department" means the Washington state department of health.

(13) "Detoxification" means the process of ridding the body of the transitory effects of intoxication and any associated physiological withdrawal reaction.

(14) "Dietitian" means an individual certified under chapter 18.138 RCW.

(15) "Document" means to record, with authentication, date and time.

(16) "Family" means an individual or individuals:

(a) Designated by the patient, who may or may not be related to the patient; or

(b) Legally appointed to represent the patient.

(17) "Drug administration" means the act of an authorized individual giving a single dose of prescribed drug or biological to a patient according to the laws and regulations governing such acts.

(18) "Drug dispensing" means interpreting a prescription and, pursuant to that prescription, selecting, measuring, labeling, packaging, and issuing the prescribed medication to a patient or service unit of the facility.

(19) "Exemption" means a written authorization from the department which releases a licensee from meeting a specific requirement or requirements in this chapter.

(20) "Governing body" means the person legally responsible for the operation and maintenance of the hospital.

(21) "Intoxication" means acute poisoning or temporary impairment of mental or physical functioning caused by alcohol or associated substance use.

(22) "Health care professional" means an individual who practices health or health-related services within the individual's authorized scope of practice, who is licensed, certified or registered under Title 18 RCW;

(23) "Licensed bed capacity" means the patient occupancy level requested by the applicant or licensee and approved by the department.

(24) "Licensee" means the person to whom the department issues the hospital license.

(25) "Maximum security window" means a security window which, if operable, opens only with a key or special tool.

(26) "Multidisciplinary treatment team" means a group of individuals from various clinical services who assess, plan, implement and evaluate treatment for patients under care.

(27) "Neglect" means conduct which results in deprivation of care necessary to maintain a patient's minimum physical and mental health, including but not limited to:

(a) Physical and material deprivation;

(b) Lack of medical care;

(c) Inadequate food, clothing or cleanliness;

(d) Refusal to acknowledge, hear or consider a patient's concerns;

(e) Lack of social interaction and physical activity;

(f) Lack of personal care; and

(g) Lack of supervision appropriate for the patient's level of functioning.

(28) "Patient-care staff" means permanent employees, temporary employees, volunteers, or contractors, who provide direct care services for patients.

(29) "Person" means any individual, firm, partnership, corporation, company, association, joint stock association, and the legal successor thereof.

(30) "Pharmacist" means an individual licensed as a pharmacist under chapter 18.64 RCW.

(31) "Pharmacy" means the central area in a hospital where prescriptions are filled, or drugs are stored and issued to hospital departments.

(32) "Physician" means an individual licensed under chapter 18.71 or 18.57 RCW.

(33) "Physician assistant" means an individual licensed under chapter 18.71A or 18.57A RCW.

(34) "Private alcoholism hospital" or "hospital" means a privately owned and operated establishment or institution which:

(a) Provides accommodations and services over a continuous period of twenty-four hours or more for two or more individuals who are not related to the licensee; and

(b) Is expressly for diagnosing, treating and caring for individuals with signs or symptoms of alcoholism and the complications of associated substance use, and other medical diseases appropriately treated and cared for in the facility.

(35) "Professional staff" means health care professionals appointed by the governing body to practice within the parameters of the professional staff bylaws.

(36) "Referred outpatient diagnostic service" means a diagnostic test or examination performed outside the hospital which:

(a) Is ordered by a member of the professional staff legally permitted to order such tests and examinations, to whom the findings and results are reported; and

(b) Does not involve a parenteral injection, local or general anesthesia, or a surgical procedure.

(37) "Registered nurse" means an individual licensed under chapter 18.88 RCW.

(38) "Security room" means a patient sleeping room designed, furnished and equipped to provide maximum safety and security.

(39) "Security window" means a window designed to inhibit exit, entry and injury to a patient, with safety glazing or other security feature to prevent breakage.

(40) "Self-administration" means the act of a patient taking the patient's own medication from a properly labeled container while on hospital premises, with the hospital responsible for appropriate medication use.

(41) "Sink" means a properly trapped plumbing fixture, with hot and cold water under pressure, which prevents back passage or return of air.

(42) "Special services" means clinical and rehabilitative activities or programs including, but not limited to:

(a) Educational and vocational training;

(b) Dentistry;

(c) Speech therapy;

(d) Physical therapy;

(e) Occupational therapy;

(f) Language translation; and

(g) Training for individuals with hearing and visual impairment.

(43) "Staff" means permanent employees, temporary employees, volunteers, and contractors.

(44) "Toilet" means a fixture fitted with a seat and flushing device used to dispose of bodily waste.

(45) "Useable floor space" means the total floor surface area excluding area used for closets, wardrobes and fixed equipment.

[Statutory Authority: Chapter 71.12 RCW and RCW 43.60.040. 95-22-013, § 246-324-010, filed 10/20/95, effective 11/20/95.]

WAC 246-324-020 Licensure—Initial, renewal, modifications. (1) A person shall have a current license issued by the department before operating or advertising a private alcohol and chemical dependency hospital.

(2) An applicant for initial licensure shall submit to the department, forty-five days or more before commencing business:

(a) A completed application on forms provided by the department;

(b) Certificate of need approval according to the provisions of chapter 246-310 WAC for the number of beds indicated on the application;

(c) Verification of department approval of facility plans submitted for construction review according to the provisions of WAC 246-324-250;

(d) A criminal history background check in accordance with WAC 246-324-030(2);

(e) Verification of approval as a private alcohol and chemical dependency hospital from the state director of fire protection according to RCW 71.12.485;

(f) The fee specified in WAC 246-324-990; and

(g) Other information as required by the department.

(3) The licensee shall apply for license renewal annually at least thirty days before the expiration date of the current license by submitting to the department:

(a) A completed application on forms provided by the department;

(b) The fee specified in WAC 246-324-990; and

(c) Other information as required by the department.

(4) At least sixty days prior to transferring ownership of a currently licensed hospital:

(a) The licensee shall submit to the department:

(i) The full name and address of the current licensee and prospective owner;

(ii) The name and address of the currently licensed hospital and the name under which the transferred hospital will operate;

(iii) Name of the new administrator; and

(iv) Date of the proposed change of ownership; and

(b) The prospective owner shall apply for licensure according to subsection (2) of this section.

[Statutory Authority: Chapter 71.12 RCW and RCW 43.60.040. 95-22-013, § 246-324-020, filed 10/20/95, effective 11/20/95.]

WAC 246-324-025 Responsibilities and rights—Licensee and department. (1) The licensee shall:

(a) Comply with the provisions of chapter 71.12 RCW and this chapter;

(b) Post the private alcohol and chemical dependency hospital license in a conspicuous place on the premises;

(c) Maintain the bed capacity at or below the licensed bed capacity;

(d) Cooperate with the department during on-site surveys and investigations;

(e) Respond to a statement of deficiencies by submitting to the department, according to the dates specified on the statement of deficiencies form:

(i) A written plan of correction for each deficiency stated in the report and date to be completed; and

(ii) A progress report stating the dates deficiencies were corrected;

(f) Obtain department approval before changing the bed capacity;

(g) Obtain department approval before starting any construction or making changes in department-approved plans or specifications;

(h) Notify the department immediately upon a change of administrator or governing body;

(i) When assuming ownership of an existing hospital, maintain past and current clinical records, registers, indexes, and analyses of hospital services, according to state law and regulations; and

(j) Obtain department approval of a plan for storing and retrieving patient records and reports prior to ceasing operation as a hospital.

(2) An applicant or licensee may contest a disciplinary decision or action of the department according to the provisions of RCW 43.70.115, chapter 34.05 RCW and chapter 246-10 WAC.

(3) The department shall:

(a) Issue or renew a license when the applicant or licensee meets the requirements in chapter 71.12 RCW and this chapter;

(b) Conduct an on-site inspection of the hospital prior to granting an initial license;

(c) Conduct on-site inspections at any time to determine compliance with chapter 71.12 RCW and this chapter;

(d) Give the administrator a written statement of deficiencies of chapter 71.12 RCW and this chapter observed during on-site surveys and investigations; and

(e) Comply with RCW 43.70.115, chapter 34.05 RCW and chapter 246-10 WAC when denying, suspending, modifying, or revoking a hospital license.

(4) The department may deny, suspend, or revoke a private alcohol and chemical dependency hospital license if the department finds the applicant, licensee, its agents, officers, directors, or any person with any interest therein:

(a) Is unqualified or unable to operate or direct operation of the hospital according to chapter 71.12 RCW and this chapter;

(b) Makes a misrepresentation of, false statement of, or fails to disclose a material fact, to the department:

(i) In an application for licensure or renewal of licensure;

(ii) In any matter under department investigation; or

(iii) During an on-site survey or inspection;

(c) Obtains or attempts to obtain a license by fraudulent means or misrepresentation;

(d) Fails or refuses to comply with the requirements of chapter 71.12 RCW or this chapter;

(e) Compromises the health or safety of a patient;

(f) Has a record of a criminal or civil conviction for:

(i) Operating a health care or mental health care facility without a license;

(ii) Any crime involving physical harm to another individual; or

(iii) Any crime or disciplinary board final decision specified in RCW 43.43.830;

(g) Had a license to operate a health care or mental health care facility denied, suspended or revoked;

(h) Refuses to allow the department access to facilities or records, or fails to promptly produce for inspection any book, record, document or item requested by the department, or interferes with an on-site survey or investigation;

(i) Commits, permits, aids or abets the commission of an illegal act on the hospital premises;

(j) Demonstrates cruelty, abuse, negligence, assault or indifference to the welfare and well-being of a patient;

(k) Fails to take immediate appropriate corrective action in any instance of cruelty, assault, abuse, neglect, or indifference to the welfare of a patient;

(l) Misappropriates the property of a patient;

(m) Fails to exercise fiscal accountability and responsibility toward individual patients, the department, or the business community; or

(n) Retaliates against a staff person, patient or other individual for reporting suspected abuse or other alleged improprieties.

(5) The department may summarily suspend a license pending proceeding for revocation or other action if the department determines a deficiency is an imminent threat to a patient's health, safety or welfare.

[Statutory Authority: Chapter 71.12 RCW and RCW 43.60.040. 95-22-013, § 246-324-025, filed 10/20/95, effective 11/20/95.]

WAC 246-324-030 Criminal history, disclosure, and background inquiries. (1) The licensee or license applicant shall require a disclosure statement as defined in RCW 43.43.834 for each prospective employee, volunteer, contractor, student, and any other individual associated with the hospital having direct contact with vulnerable adults as defined under RCW 43.43.830.

(2) The license applicant having direct contact with vulnerable adults shall obtain a Washington state patrol criminal history background disclosure statement and submit it to the department with the initial application for licensure.

(3) The licensee or license applicant shall:

(a) Require a Washington state patrol criminal history background inquiry, as specified in RCW 43.43.842(1), from the Washington state patrol or the department of social and health services for each:

(i) Staff person, student, and any other individual currently associated with the hospital having direct contact with vulnerable adults, when engaged on or since July 22, 1989; and

(ii) Prospective staff person, student, and individual applying for association with the hospital prior to allowing the individual direct contact with vulnerable adults, except as allowed by subsection (4) of this section;

(b) Inform each individual identified in (a) of this subsection of the requirement for a background inquiry;

(c) Require the individual to sign an acknowledgement statement that a background inquiry will be made;

(d) Verbally inform the individual of the background inquiry results within seventy-two hours of receipt; and

(e) Offer to provide a copy of the background inquiry results to the individual within ten days of receipt.

(4) The licensee may conditionally employ, contract with, accept as a volunteer or associate, an individual having direct contact with vulnerable adults pending a background inquiry, provided the licensee:

(a) Immediately obtains a disclosure statement from the individual; and

(b) Requests a background inquiry within three business days of the conditional acceptance of the individual.

(5) Except as provided in RCW 43.43.842 and in subsection (4) of this section, a licensee shall not hire or retain, directly or by contract, any individual having direct contact with vulnerable adults, if that individual has been:

(a) Convicted of a crime against individuals as defined in RCW 43.43.830;

(b) Convicted of a crime relating to financial exploitation as defined in RCW 43.43.830;

(c) Found in any disciplinary board final decision to have abused a vulnerable adult under RCW 43.43.830; or

(d) The subject in a protective proceeding under chapter 74.34 RCW.

(6) The licensee shall establish and implement procedures ensuring that all disclosure statements and background inquiry responses are:

(a) Maintained in a confidential and secure manner;

(b) Used for employment purposes only;

(c) Not disclosed to any individual except:

(i) The individual about whom the licensee made the disclosure or background inquiry;

(ii) Authorized state and federal employees; and

(iii) The Washington state patrol auditor; and

(d) Retained and available for department review:

(i) During the individual's employment or association with a facility; and

(ii) At least two years following termination of employment or association with a facility.

(7) The department shall:

(a) Review records required under this section;

(b) Investigate allegations of noncompliance with RCW 43.43.830 through 43.43.842, when necessary, in consultation with law enforcement personnel; and

(c) Use information collected under this section solely for the purpose of determining eligibility for licensure or relicensure as required under RCW 43.43.842.

(8) The department may require licensees to complete additional disclosure statements or background inquiries for an individual associated with the licensed hospital having direct contact with vulnerable adults if the department has reason to believe that offenses specified under RCW 43.43.830 have occurred since completion of the previous disclosure statement or background inquiry.

[Statutory Authority: Chapter 71.12 RCW and RCW 43.60.040. 95-22-013, § 246-324-030, filed 10/20/95, effective 11/20/95.]

WAC 246-324-035 Policies and procedures. (1) The licensee shall develop and implement the following written policies and procedures consistent with this chapter and services provided:

(a) Criteria for admitting and retaining patients;

(b) Methods for assessing each patient's physical and mental health prior to admission;

(c) Providing or arranging for the care and treatment of patients;

(d) Assuring patient rights according to chapters 71.05 and 71.34 RCW, including posting those rights in a prominent place for the patients to read;

(e) Protecting against abuse and neglect and reporting suspected incidents according to the provisions of chapters 71.05, 71.34, 74.34 and 26.44 RCW;

(f) Fire and disaster plans, including:

(i) Accessing patient-occupied sleeping rooms, toilet rooms and bathrooms;

(ii) Summoning internal or external resource agencies or persons, such as a poison center, fire department, and police;

(g) Emergency medical care, including:

(i) Physician orders;

(ii) Staff actions in the absence of a physician; and

(iii) Storing and accessing emergency supplies and equipment;

(h) Managing assaultive, self-destructive, or out-of-control behavior, including:

(i) Immediate actions and conduct; and

(ii) Documenting in the clinical record;

(i) Pharmacy and medication services consistent with WAC 246-324-210;

(j) Infection control as required by WAC 246-324-100;

(k) Staff actions upon:

(i) Patient elopement;

(ii) A serious change in a patient's condition, and immediately notifying family according to chapters 71.05 and 71.34 RCW;

(iii) Accidents or incidents potentially harmful or injurious to patients, and documentation in the clinical record; and

(iv) Patient death;

(l) Smoking on the hospital premises;

(m) Responsibility for patients' personal property, including recording any valuables left on deposit with the hospital;

(n) Allowing patients to work on the premises, according to WAC 246-324-180;

(o) Maintenance and housekeeping functions, including schedules;

(p) Cleaning, inspecting, repairing and calibrating electrical, biomedical and therapeutic equipment, and documenting actions;

(q) Transporting patients for:

(i) Diagnostic or treatment activities;

(ii) Hospital connected business and programs; and

(iii) Medical care services not provided by the hospital;

(r) Transferring patients to other health care facilities or agencies;

(s) Obtaining and retaining criminal history background checks and disclosure statements consistent with WAC 246-324-030;

(t) Research involving patients;

(u) Clinical records consistent with WAC 246-324-200, the Uniform Medical Records Act, chapter 70.02 RCW and Title 42 CFR, chapter 1, Part 2, 10/1/89;

(v) Food service consistent with chapter 246-215 WAC and WAC 246-324-230.

(2) The licensee shall review and update the policies and procedures annually or more often as needed.

[Statutory Authority: Chapter 71.12 RCW and RCW 43.60.040. 95-22-013, § 246-324-035, filed 10/20/95, effective 11/20/95.]

WAC 246-324-040 Governing body and administration. The governing body shall:

(1) Adopt written policies concerning the purposes, operation and maintenance of the hospital, and the safety, care and treatment of patients;

(2) Provide staff, facilities, equipment, supplies and services to meet the needs of patients within the purposes of the hospital;

(3) Establish and maintain a current written organizational plan delineating positions, responsibilities, authorities, and relationships of positions within the hospital;

(4) Appoint an administrator responsible for implementing the policies adopted by the governing body;

(5) Appoint a physician as medical director responsible for directing and supervising medical treatment and patient care twenty-four hours per day;

(6) Maintain an organized professional staff accountable to the governing body;

(7) Appoint and periodically reappoint the professional staff;

(8) Require and approve professional staff bylaws and rules concerning, at a minimum:

(a) Organization of the professional staff;

(b) Delineation of privileges;

(c) Requirements for membership;

(d) Specific mechanisms for appointing and reappointing members;

(e) Granting, renewing and revising clinical privileges;

(f) Self-government;

(g) Required functions;

(h) Accountability to the governing body; and

(i) Mechanisms to monitor and evaluate quality of care and clinical performance; and

(9) Require that each person admitted to the hospital is under the care of a professional staff member with clinical privileges.

[Statutory Authority: Chapter 71.12 RCW and RCW 43.60.040. 95-22-013, § 246-324-040, filed 10/20/95, effective 11/20/95.]

WAC 246-324-050 Staff. The licensee shall:

(1) Employ sufficient, qualified staff to:

(a) Provide adequate patient services;

(b) Maintain the hospital free of safety hazards; and

(c) Implement fire and disaster plans;

(2) Develop and maintain a written job description for the administrator and each staff position;

(3) Maintain evidence of appropriate qualifications and current credentials prior to hiring, or granting or renewing clinical privileges or association of any health care professional;

(4) Verify work references prior to hiring staff;

(5) Assure all patient-care staff including those transporting patients and supervising patient activities, except licensed staff whose professional training exceeds first-responder training, have within thirty days of employment:

(a) Current cardiopulmonary resuscitation cards from instructors certified by the American Red Cross, American Heart Association, United States Bureau of Mines, or Washington state department of labor and industries; and

(b) Current first-aid cards from instructors certified as in (a) of this subsection;

(6) Provide and document orientation and appropriate training for all staff, including:

(a) Organization of the hospital;

(b) Physical layout of hospital, including buildings, departments, exits, and services;

(c) Fire and disaster plans, including monthly drills;

(d) Infection control;

(e) Specific duties and responsibilities;

(f) Policies, procedures, and equipment necessary to perform duties;

(g) Patient rights according to chapters 71.05 and 71.34 RCW and patient abuse;

(h) Managing patient behavior; and

(i) Appropriate training for expected duties;

(7) Make available an ongoing, documented, in-service education program, including but not limited to:

(a) For each staff person, training to maintain and update competencies needed to perform assigned duties and responsibilities; and

(b) For patient care staff, in addition to (a) of this subsection, the following training:

(i) Methods of patient care;

(ii) Using the least restrictive alternatives;

(iii) Managing assaultive and self-destructive behavior;

(iv) Patient rights pursuant to chapters 71.05 and 71.34 RCW;

(v) Special needs of the patient population, such as children, minorities, elderly, and individuals with disabilities;

(vi) Cardiopulmonary resuscitation; and

(vii) First-aid training;

(8) When volunteer services are used within the hospital:

(a) Designate a qualified employee to be responsible for volunteer services;

(b) Provide and document orientation and training according to subsections (6) and (7) of this section for each volunteer; and

(c) Provide supervision and periodic written evaluations of each volunteer working directly with patients;

(9) In addition to following WISHA requirements, protect patients from tuberculosis by requiring each staff person to have upon employment or starting service, and each year thereafter during the individual's association with the hospital:

(a) A tuberculin skin test by the Mantoux method, unless the staff person:

(i) Documents a previous positive Mantoux skin test, which is ten or more millimeters of induration read at forty-eight to seventy-two hours;

(ii) Documents meeting the requirements of this subsection within the six months preceding the date of employment; or

(iii) Provides a written waiver from the department or authorized local health department stating the Mantoux skin test presents a hazard to the staff person's health;

(b) A second test one to three weeks after a negative Mantoux skin test for staff thirty-five years of age or older; and

(c) A chest X ray within seven days of any positive Mantoux skin test;

(10) Report positive chest X rays to the appropriate public health authority, and follow precautions ordered by a physician or public health authority;

(11) Restrict a staff person's contact with patients when the staff person has a known communicable disease in the infectious stage which is likely to be spread in the hospital setting or by casual contact; and

(12) Maintain a record on the hospital premises for each staff person, during employment and for two years following termination of employment, including but not limited to:

(a) An employment application;

(b) Verification of required education, training and credentials;

(c) Documentation of contacting work references as required by subsection (4) of this section;

(d) Criminal history disclosure and background checks as required in WAC 246-324-030;

(e) Verification of current cardiopulmonary resuscitation, first-aid and HIV/AIDS training;

(f) Tuberculin test results, reports of X-ray findings, exceptions, physician or public health official orders, and waivers; and

(g) Annual performance evaluations.

[Statutory Authority: Chapter 71.12 RCW and RCW 43.60.040. 95-22-013, § 246-324-050, filed 10/20/95, effective 11/20/95.]

WAC 246-324-060 HIV/AIDS education and training. The licensee shall:

(1) Verify or arrange appropriate education and training of staff within thirty days of employment on the prevention, transmission, and treatment of human immunodeficiency virus (HIV) and acquired immunodeficiency syndrome (AIDS) consistent with RCW 70.24.310; and

(2) Use infection control standards and educational material consistent with:

(a) The approved curriculum manual *KNOW - HIV/AIDS Prevention Education for Health Care Facility Employees*, January 1991, or subsequent editions published by the department; and

(b) WAC 296-62-08001, Bloodborne pathogens implementing WISHA.

[Statutory Authority: Chapter 71.12 RCW and RCW 43.60.040. 95-22-013, § 246-324-060, filed 10/20/95, effective 11/20/95.]

WAC 246-324-100 Infection control. The licensee shall:

(1) Establish and implement an effective hospital-wide infection control program, which includes at a minimum:

(a) Written policies and procedures describing:

(i) Types of surveillance used to monitor rates of nosocomial infections;

(ii) Systems to collect and analyze data; and

(iii) Activities to prevent and control infections;

(b) A review process, using definitions and criteria established by the infection control committee, to determine if staff and patient infections are nosocomial;

(c) A system for reporting communicable diseases consistent with chapter 246-100 WAC, Communicable and certain other diseases;

(d) A procedure for reviewing and approving infection control aspects of policies and procedures used in each area of the hospital;

(e) A procedure to monitor the physical environment of the hospital for situations which may contribute to the spread of infectious diseases;

(f) Provisions for:

(i) Providing consultation regarding patient care practices, equipment and supplies which may influence the risk of infection;

(ii) Providing consultation regarding appropriate procedures and products for cleaning, disinfecting and sterilizing;

(iii) Providing infection control information for orientation and in-service education for staff providing direct patient care;

(iv) Making recommendations, consistent with federal, state, and local laws and rules, for methods of safe and sanitary disposal of:

(A) Sewage;

(B) Solid and liquid wastes; and

(C) Infectious wastes including safe management of sharps;

(g) Identifying specific precautions to prevent transmission of infections; and

(h) Coordinating employee activities to control exposure and transmission of infections to or from employees and others performing patient services;

(2) Assign one or more individuals to manage the infection control program with documented qualifications related to infection surveillance, prevention, and control, including:

(a) Education;

(b) Training;

(c) Certification; or

(d) Supervised experience;

(3) Designate an infection control committee, comprised of the individual or individuals assigned to manage the program and multidisciplinary representatives from the professional staff, nursing staff and administrative staff, to:

(a) Oversee the program;

(b) Develop a committee-approved description of the program, including surveillance, prevention, and control activities;

(c) Delegate authority, approved in writing by administrative and professional staff, to institute surveillance, prevention, and control measures when there is reason to believe any patient or staff may be at risk of infection;

(d) Meet at regularly scheduled intervals, at least quarterly;

(e) Maintain written minutes and reports of findings presented during committee meetings; and

(f) Develop a method for forwarding recommendations to the professional staff, nursing, administration, and other committees and departments as appropriate.

[Statutory Authority: Chapter 71.12 RCW and RCW 43.60.040. 95-22-013, § 246-324-100, filed 10/20/95, effective 11/20/95.]

WAC 246-324-120 Physical environment. The licensee shall:

(1) Provide a safe and clean environment for patients, staff and visitors;

(2) Provide ready access and equipment to accommodate individuals with physical and mental disabilities;

(3) Provide adequate lighting in all areas;

(4) Provide natural or mechanical ventilation sufficient to remove odors, smoke, excessive heat and condensation from all habitable rooms;

(5) Provide a heating system operated and maintained to sustain a comfortable, healthful temperature in all habitable rooms;

(6) Provide an adequate supply of hot and cold running water under pressure meeting the standards in chapters 246-290 and 246-291 WAC, with:

(a) Devices to prevent backflow into the potable water supply system; and

(b) Water temperature not exceeding 120°F automatically regulated at all plumbing fixtures used by patients;

(7) Implement current, written policies, procedures, and schedules for maintenance and housekeeping functions;

(8) Provide housekeeping and service facilities on each floor of the hospital including:

(a) One or more service sinks, designed for filling and emptying mop buckets;

(b) Housekeeping closets:

(i) Equipped with shelving;

(ii) Ventilated to the out-of-doors; and

(iii) Kept locked; and

(c) A utility service area designed and equipped for washing, disinfecting, storing, and housing medical and nursing supplies and equipment; and

(9) Provide equipment and facilities to collect and dispose of all sewage, garbage, refuse and liquid waste in a safe and sanitary manner.

[Statutory Authority: Chapter 71.12 RCW and RCW 43.60.040. 95-22-013, § 246-324-120, filed 10/20/95, effective 11/20/95.]

WAC 246-324-140 Patient living areas. The licensee shall:

(1) Provide patient sleeping rooms with:

(a) A minimum of eighty square feet of useable floor space in a single bedroom;

(b) A minimum of seventy square feet of useable floor space per bed in a multipatient room;

(c) A minimum ceiling height of seven feet six inches over the required floor area;

(d) A maximum capacity of four patients;

(e) A floor elevation no lower than three feet six inches below grade, with grade extending horizontally ten or more feet from the building;

(f) Direct access to and from a corridor, common-use activity room, or other common-use area;

(g) A clear window area on an outside wall equal to or greater than one-tenth the floor area with a minimum of ten square feet;

(h) Sufficient room furnishings maintained in safe and clean condition including:

(i) A bed for each patient at least thirty-six inches wide or appropriate to the special needs and size of the patient;

(ii) A cleanable, firm mattress; and

(iii) A cleanable or disposable pillow;

(i) At least three feet between beds, and adequate space between furnishings to allow easy entrance, exit, and traffic flow within the room;

(j) A means to assure patient privacy when appropriate;

(2) Provide, in addition to the requirements in subsection (1) of this section, when security rooms are used:

(a) Security windows appropriate to the area and program;

(b) Furnishings, equipment and design for maximum safety and security;

(c) Shielded and tamper-resistant lighting fixtures and electrical outlets;

(d) A door lockable from the outside;

(e) Provisions for authorized staff to observe occupants;

(3) Provide an enclosed space within the patient sleeping room, or nearby, suitable for each patient to hang garments, and store clothing and personal belongings;

(4) Provide secure storage for each patient's valuables in the patient sleeping room or conveniently available elsewhere in the hospital;

(5) Provide a dining area for patients in a community setting with furnishings appropriate for dining;

(6) Provide and maintain a safe area or areas for patient recreation and physical activity equal to or greater than twenty square feet for each licensed bed space;

(7) Provide a visiting area allowing privacy for patients and visitors;

(8) Provide a readily available telephone for patients to make and receive confidential calls; and

(9) Provide a "nonpay" telephone or equivalent communication device readily accessible on each patient occupied floor for emergency use.

[Statutory Authority: Chapter 71.12 RCW and RCW 43.60.040. 95-22-013, § 246-324-140, filed 10/20/95, effective 11/20/95.]

WAC 246-324-150 Clinical facilities. The licensee shall provide:

(1) An adequate number of counseling or treatment rooms for group or individual therapy programs with reasonable sound-proofing to maintain confidentiality;

(2) One or more physical examination rooms, with or without an exterior window, equipped with:

(a) An examination table;

(b) Examination light;

(c) Storage for medical supplies and equipment; and

(d) A readily accessible handwashing sink, soap dispenser, and acceptable single-use hand-drying device; and

(3) Secure areas to properly store and handle medical supplies and medications.

[Statutory Authority: Chapter 71.12 RCW and RCW 43.60.040. 95-22-013, § 246-324-150, filed 10/20/95, effective 11/20/95.]

WAC 246-324-160 Bathrooms, toilet rooms and handwashing sinks. The licensee shall provide:

(1) One toilet, handwashing sink and bathing fixture for each six patients, or fraction thereof, on each patient-occupied floor of the hospital, with:

(a) Provisions for privacy during toileting, bathing, showering, and dressing;

(b) Separate toilet rooms for each sex if the toilet room contains more than one toilet;

(c) Separate bathrooms for each sex if the bathroom contains more than one bathing fixture; and

(d) One or more grab bars at each toilet and bathing fixture appropriate to the needs of patients;

(2) Toilet rooms and bathrooms directly accessible from patient rooms or corridors, without passing through any kitchen, pantry, food preparation, food storage, or dish-washing area or from one bedroom through another bedroom.

[Statutory Authority: Chapter 71.12 RCW and RCW 43.60.040. 95-22-013, § 246-324-160, filed 10/20/95, effective 11/20/95.]

WAC 246-324-170 Patient care services. (1) The licensee shall:

(a) Provide an initial physical and dependency assessment by a physician, advanced registered nurse practitioner, or physician assistant;

(b) Admit only those patients for whom the hospital is qualified by staff, services and equipment to give adequate care; and

(c) Provide appropriate transfer and acceptance of a patient needing medical care services not provided by the hospital, by:

(i) Transferring relevant data with the patient;

(ii) Obtaining written or verbal approval by the receiving facility prior to transfer; and

(iii) Immediately notifying the patient's family.

(2) The licensee shall provide medical supervision and treatment, transfer, and discharge planning for each patient admitted or retained, including but not limited to:

(a) Admittance by a member of the medical staff as defined by the staff bylaws;

(b) An initial treatment plan upon admission incorporating any advanced directives of the patient;

(c) A physical examination and medical history completed and recorded by a physician, advanced registered nurse practitioner, or physician assistant within twenty-four hours following admission, unless the patient had a physical examination and medical history completed within fourteen days prior to admission, and the information is recorded in the clinical record;

(d) A comprehensive treatment plan developed within seventy-two hours following admission:

(i) Developed by a multidisciplinary treatment team with input, when appropriate, by the patient, family, and other agencies;

(ii) Reviewed and modified by a chemical dependency counselor as indicated by the patient's clinical condition;

(iii) Interpreted to personnel, staff, patient, and, when possible and appropriate, to family; and

(iv) Implemented by persons designated in the plan;

(e) Physician orders for drug prescriptions, medical treatments and discharge;

(f) Current written policies and orders signed by a physician to guide the action of personnel when medical emergencies or threat to life arise and a physician is not present;

(g) A discharge plan including a review of the patient's hospitalization, condition upon discharge, and recommendations for follow-up and continuing care;

(h) Patient education pertaining to the patient's dependency, prescribed medications, and health maintenance; and

(i) Referrals to appropriate resources and community services during and after hospitalization.

(3) The licensee shall provide, or arrange for, diagnostic and therapeutic services prescribed by the attending professional staff, including:

(a) Medical services, including:

(i) A physician on call at all times;

(ii) Provisions for emergency medical services when needed; and

(iii) Participation of a multidisciplinary treatment team;

(b) Nursing services, including:

(i) A registered nurse, employed full time, responsible for nursing services twenty-four hours per day;

(ii) One or more registered nurses on duty at all times to supervise nursing care;

(c) Chemical dependency counseling services, directed and supervised by a chemical dependency counselor, responsible for:

(i) A twenty-four-hour per day chemical dependency program; and

(ii) Patient education on chemical dependency; and

(d) Special services, within the hospital or contracted outside the hospital, as specified in the comprehensive treatment plan.

[Statutory Authority: Chapter 71.12 RCW and RCW 43.60.040. 95-22-013, § 246-324-170, filed 10/20/95, effective 11/20/95.]

WAC 246-324-180 Patient safety. (1) The licensee shall provide adequate emergency supplies and equipment, including airways, bag resuscitators, intravenous fluids, oxygen, sterile supplies, and other equipment identified in the policies and procedures, easily accessible to patient-care staff;

(2) When research is proposed or conducted involving patients, the licensee shall:

(a) Document an initial and continuing review process by a multidisciplinary treatment team;

(b) Require approval by the patient prior to participation;

(c) Allow the patient to discontinue participation at any time; and

(d) Ensure policies and procedures are in accordance with Title 42 Code of Federal Regulations, chapter 1, Part 2, 10/1/89 edition.

(3) The licensee shall prohibit the use of any patient for basic maintenance of the hospital or equipment, housekeeping, or food service in compliance with the Federal Fair Labor Standards Act, 29 USC, paragraph 203 et al., and 29 CFR, section 525 et al., except:

(a) Cleaning or maintaining the patient's private living area, or performing personal housekeeping chores; or

(b) Performing therapeutic activities:

(i) Included in and appropriate to the comprehensive treatment plan;

(ii) As agreed to with the patient;

(iii) Documented as part of the treatment program; and

(iv) Appropriate to the age, physical, and mental condition of the patient.

(4) The licensee shall assure the safety and comfort of patients when construction work occurs in or near occupied areas.

[Statutory Authority: Chapter 71.12 RCW and RCW 43.60.040. 95-22-013, § 246-324-180, filed 10/20/95, effective 11/20/95.]

WAC 246-324-190 Provisions for patients with tuberculosis. A licensee providing inpatient services for patients with suspected or known infectious tuberculosis shall:

(1) Design patient rooms with:

(a) Ventilation to maintain a negative pressure condition in each patient room relative to adjacent spaces, except bath and toilet areas, with:

(i) Air movement or exhaust from the patient room to the out-of-doors with the exhaust grille located over the head of the bed;

(ii) Exhaust at the rate of six air changes per hour; and

(iii) Make-up or supply air from adjacent ventilated spaces for four or less air changes per hour, and tempered outside air for two or more air changes per hour;

(iv) Ultraviolet generator irradiation as follows:

(A) Use of ultraviolet fluorescent fixtures with lamps emitting wave length of 253.7 nanometers;

(B) The average reflected irradiance less than 0.2 microwatts per square centimeter in the room at the five foot level;

(C) Wall-mount type of fixture installed over the head of the bed, as close to the ceiling as possible to irradiate the area of the exhaust grille and the ceiling; and

(D) Lamps changed as recommended by the manufacturer; and

(b) An adjoining bathroom and toilet room with bedpan washer; and

(2) Provide discharge information to the health department of the patient's county of residence.

[Statutory Authority: Chapter 71.12 RCW and RCW 43.60.040. 95-22-013, § 246-324-190, filed 10/20/95, effective 11/20/95.]

WAC 246-324-200 Clinical records. (1) The licensee shall establish and maintain an organized clinical record service, consistent with recognized principles of record management, directed, staffed, and equipped to:

(a) Ensure timely, complete and accurate identification, checking, processing, indexing, filing, and retrieval of records;

(b) Facilitate compilation, maintenance, analyses, and distribution of patient care statistics; and

(c) Protect records from undue deterioration and destruction.

(2) The licensee shall develop and maintain an individual clinical record for each person receiving care, treatment, or diagnostic service at the hospital.

(3) The licensee shall ensure prompt entry and filing of the following data into the clinical record for each period a patient receives inpatient or outpatient services:

(a) Identifying information;

(b) Assessment and diagnostic data including history of findings and treatment provided for the dependency for which the patient is treated in the hospital;

(c) Comprehensive treatment plan;

(d) Authenticated orders for:

(i) Drugs or other therapies;

(ii) Therapeutic diets; and

(iii) Care and treatment, including standing medical orders used in the care and treatment of the patient, except standing medical emergency orders;

(e) Significant observations and events in the patient's clinical treatment;

(f) Any restraint of the patient;

(g) Data bases containing patient information;

(h) Original reports or durable, legible, direct copies of original reports, of all patient tests, diagnostic procedures and examinations performed on or for the patient;

(i) Description of therapies administered, including drug therapies;

(j) Nursing services;

(k) Progress notes recorded by the professional staff responsible for the care of the patient or others significantly involved in active treatment modalities; and

(l) A discharge plan and discharge summary.

(4) The licensee shall ensure each entry includes:

(a) Date;

(b) Time of day;

(c) Authentication by the individual making the entry; and

(d) Diagnosis, abbreviations and terminology consistent with:

(i) Fourth edition revised 1994 *The American Psychiatry Association Diagnostic and Statistical Manual of Mental Disorders*; and

(ii) *International Classification of Diseases, 9th edition, 1988*.

(5) The licensee shall provide designated areas, designed to assure confidentiality, for reading, recording, and maintaining patient clinical records and for patients to review their own records.

(6) The licensee shall prevent access to clinical records by unauthorized persons.

(7) The licensee shall retain and preserve:

(a) Each patient's clinical records, excluding reports on referred outpatient diagnostic services, for:

(i) Adult patients, a minimum of ten years following the most recent discharge; or

(ii) Patients who are minors at the time of care, treatment, or diagnosis, a minimum of three years following the patient's eighteenth birth date, or ten years following the most recent discharge, whichever is longer;

(b) Reports on referred outpatient diagnostic services for at least two years;

(c) A master patient index card or equivalent for at least the same period of time as the corresponding clinical records; and

(d) Patients' clinical records, registers, indexes, and analyses of hospital service in original form or in photographic form in accordance with the provisions of chapter 5.46 RCW.

[Statutory Authority: Chapter 71.12 RCW and RCW 43.60.040. 95-22-013, § 246-324-200, filed 10/20/95, effective 11/20/95.]

WAC 246-324-210 Pharmacy and medication services. The licensee shall:

(1) Maintain the pharmacy in the hospital in a safe, clean, and sanitary condition;

(2) Provide evidence of current approval of pharmacy services by the Washington state board of pharmacy under chapter 18.64 RCW;

(3) Develop and implement procedures for prescribing, storing, and administering medications according to state and federal laws and rules, including:

(a) Assuring professional staff who prescribe are authorized to prescribe under chapter 69.41 RCW;

(b) Assuring orders and prescriptions for medications administered and self-administered include:

(i) Date and time;

(ii) Type and amount of drug;

(iii) Route of administration;

(iv) Frequency of administration; and

(v) Authentication by professional staff;

(c) Administering drugs;

(d) Self-administering drugs;

(e) Receiving and recording or transcribing verbal or telephone drug orders by authorized staff;

(f) Authenticating verbal and telephone orders by prescriber in a timely manner, not to exceed forty-eight hours for inpatients;

(g) Use of medications and drugs owned by the patient but not dispensed by the hospital pharmacy, including:

(i) Specific written orders;

(ii) Identification and administration of drug;

(iii) Handling, storage and control;

(iv) Disposition; and

(v) Pharmacist and physician inspection and approval prior to patient use to ensure proper identification, lack of deterioration, and consistency with current medication profile;

(h) Maintaining drugs in patient care areas of the hospital including:

(i) Hospital pharmacist or consulting pharmacist responsibility;

(ii) Legible labeling with generic and/or trade name and strength as required by federal and state laws;

(iii) Access only by staff authorized access under hospital policy;

(iv) Storage under appropriate conditions specified by the hospital pharmacist or consulting pharmacist, including provisions for:

(A) Storing medicines, poisons, and other drugs in a specifically designated, well-illuminated, secure space;

(B) Separating internal and external stock drugs; and

(C) Storing Schedule II drugs in a separate locked drawer, compartment, cabinet, or safe; and

(i) Preparing drugs in designated rooms with ample light, ventilation, sink or lavatory, and sufficient work area;

(j) Prohibiting the administration of outdated or deteriorated drugs, as indicated by label;

(k) Restricting access to pharmacy stock of drugs to:

(i) Legally authorized pharmacy staff; and

(ii) Except for Schedule II drugs, to a registered nurse designated by the hospital when all of the following conditions are met:

(A) The pharmacist is absent from the hospital;

(B) Drugs are needed in an emergency, and are not available in floor supplies; and

(C) The registered nurse, not the pharmacist, is accountable for the registered nurse's actions;

(4) The appropriate professional staff committee shall approve all policies and procedures on drugs, after documented consultation with:

(a) The pharmacist or pharmacist consultant directing hospital pharmacy services; and

(b) An advisory group comprised of representatives from the professional staff, hospital administration, and nursing services;

(5) When planning new construction of a pharmacy:

(a) Follow the general design requirements for architectural components, electrical service, lighting, call systems, hardware, interior finishes, heating, plumbing, sewerage, ventilation/air conditioning, and signage in WAC 246-318-540;

(b) Provide housekeeping facilities within or easily accessible to the pharmacy;

(c) Locate pharmacy in a clean, separate, secure room with:

(i) Storage, including locked storage for Schedule II controlled substances;

(ii) All entrances equipped with closers;

(iii) Automatic locking mechanisms on all entrance doors to preclude entrance without a key or combination;

(iv) Perimeter walls of the pharmacy and vault, if used, constructed full height from floor to ceiling;

(v) Security devices or alarm systems for perimeter windows and relites;

(vi) An emergency signal device to signal at a location where twenty-four-hour assistance is available;

(vii) Space for files and clerical functions;

(viii) Break-out area separate from clean areas; and

(ix) Electrical service including emergency power to critical pharmacy areas and equipment;

(d) Provide a general compounding and dispensing unit, room, or area with:

(i) A work counter with impermeable surface;

(ii) A corrosion-resistant sink, suitable for handwashing, mounted in counter or integral with counter;

(iii) Storage space;

(iv) A refrigeration and freezing unit; and

(v) Space for mobile equipment;

(e) If planning a manufacturing and unit dose packaging area or room, provide with:

(i) Work counter with impermeable surface;

(ii) Corrosion-resistant sink, suitable for handwashing, mounted in counter or integral with counter; and

(iii) Storage space;

(f) Locate admixture, radiopharmaceuticals, and other sterile compounding room, if planned, in a low traffic, clean area with:

(i) A preparation area;

(ii) A work counter with impermeable surface;

(iii) A corrosion-resistant sink, suitable for handwashing, mounted in counter or integral with counter;

(iv) Space for mobile equipment;

(v) Storage space;

(vi) A laminar flow hood in admixture area; and

(vii) Shielding and appropriate ventilation according to WAC 246-318-540 (3)(m) for storage and preparation of radiopharmaceuticals;

(g) If a satellite pharmacy is planned, comply with the provisions of:

(i) Subsection (5)(a), (5)(c)(i), (ii), (iii), (iv), (v), and (vi) of this section when drugs will be stored;

(ii) Subsection (5)(c)(vii), (viii), and (ix) of this section, if appropriate; and

(iii) Subsections (5)(d) and (g) of this section if planned;

(h) If a separate outpatient pharmacy is planned, comply with the requirements for a satellite pharmacy including:

(i) Easy access;

(ii) A conveniently located toilet meeting accessibility requirements in WAC 51-20-3100; and

(iii) A private counseling area.

[Statutory Authority: Chapter 71.12 RCW and RCW 43.60.040. 95-22-013, § 246-324-210, filed 10/20/95, effective 11/20/95.]

WAC 246-324-220 Laboratory services. The licensee shall:

(1) Provide access to laboratory services to meet emergency and routine needs of patients;

(2) Ensure laboratory services are provided by licensed or waivered medical test sites in accordance with chapter 70.42 RCW and chapter 246-338 WAC; and

(3) Maintain each medical test site in the hospital in a safe, clean, and sanitary condition.

[Statutory Authority: Chapter 71.12 RCW and RCW 43.60.040. 95-22-013, § 246-324-220, filed 10/20/95, effective 11/20/95.]

WAC 246-324-230 Food and dietary services. The licensee shall:

(1) Comply with chapters 246-215 and 246-217 WAC, food service;

(2) Designate an individual responsible for managing and supervising dietary/food services twenty-four hours per day, including:

(a) Incorporating ongoing recommendations of a dietitian;

(b) Serving at least three meals a day at regular intervals with fifteen or less hours between the evening meal and breakfast, unless the licensee provides a nutritious snack between the evening meal and breakfast;

(c) Providing well-balanced meals and nourishments that meet the current recommended dietary allowances of the *National Research Council*, 10th edition, 1989, adjusted for patient age, sex and activities unless contraindicated;

(d) Making nourishing snacks available as needed for patients, and posted as part of the menu;

(e) Preparing and serving therapeutic diets according to written medical orders;

(f) Preparing and serving meals under the supervision of food service staff;

(g) Maintaining a current diet manual, approved in writing by the dietitian and medical staff, for use in planning and preparing therapeutic diets;

(h) Ensuring all menus:

(i) Are written at least one week in advance;

(ii) Indicate the date, day of week, month and year;

(iii) Include all foods and snacks served that contribute to nutritional requirements;

(iv) Provide a variety of foods;

(v) Are approved in writing by the dietitian;

(vi) Are posted in a location easily accessible to all patients; and

(vii) Are retained for one year;

(3) Substitute foods, when necessary, of comparable nutrient value and record changes on the menu;

(4) Allow sufficient time for patients to consume meals;

(5) Ensure staff from dietary/food services are present in the hospital during all meal times;

(6) Keep policies and procedures pertaining to food storage, preparation, and storage, and cleaning food service equipment and work areas in the food service area for easy reference by dietary staff at all times.

[Statutory Authority: Chapter 71.12 RCW and RCW 43.60.040. 95-22-013, § 246-324-230, filed 10/20/95, effective 11/20/95.]

WAC 246-324-240 Laundry. The licensee shall provide:

(1) Laundry and linen services, on the premises or by commercial laundry;

(2) Storage and sorting areas for soiled laundry in well-ventilated areas, separate from clean linen handling areas;

(3) A clean area with an adequate supply of clean linen;

(4) When laundry is washed on the premises:

(a) An adequate water supply and a minimum water temperature of 140°F in washing machines; and

(b) Laundry facilities in areas separate from food preparation and dining; and

(5) Facilities for patients who wear their own clothing during hospitalization to do personal laundry.

[Statutory Authority: Chapter 71.12 RCW and RCW 43.60.040. 95-22-013, § 246-324-240, filed 10/20/95, effective 11/20/95.]

WAC 246-324-250 Construction. (1) The applicant or licensee shall comply with chapter 31 of the *Washington State Building Code* for all construction.

(2) Prior to starting construction, the applicant or licensee shall submit the following documentation to the department:

(a) A completed application form, a copy of which is provided in the *Submissions Guide for Health and Residential Facility Construction Projects*, which may be obtained from the department;

(b) The fee specified in chapter 246-314 WAC;

(c) A functional program which describes the services and operational methods affecting the hospital building, premises, and patients;

(d) One set of preliminary documents including, when applicable:

(i) Plot plans drawn to scale showing:

(A) Streets, driveways, parking, vehicle and pedestrian circulation;

(B) Site utilities, water service system, sewage disposal system, electrical service system, elevations; and

(C) Location of existing and new buildings and other fixed equipment;

(ii) Building plans drawn to scale showing:

(A) Floor plans designating function of each room and fixed equipment;

(B) Typical building sections and exterior elevations;

(iii) Outline specifications generally describing the construction and materials including mechanical and electrical systems; and

(e) Three sets of final construction drawings, stamped by a Washington state licensed architect or engineer, complying with the requirements of this chapter including, when applicable:

(i) Plot plans drawn to scale showing all items required in the preliminary plan in final form;

(ii) Building plans drawn to scale showing:

(A) Floor plans designating function of each room and fixed equipment;

(B) Interior and exterior elevations;

(C) Building sections and construction details;

(D) Schedules of room finishes, doors, finish hardware and windows;

(E) Mechanical, including plumbing, heating, venting and air conditioning; and

(F) Electrical, including lighting, power and communication systems; and

(iii) Specifications fully describing the workmanship and finishes;

(f) One copy of specifications and the radiant panel test report for each carpet type used in corridors and exitways;

(g) Three copies of fire sprinkler system shop drawings, hydraulic calculations and equipment specifications, stamped by the fire sprinkler contractor; and

(h) Three copies of fire alarm system shop drawings and equipment specifications.

(3) The licensee shall:

(a) Obtain department approval of final construction documents prior to starting construction;

(b) Conform with the approved plans during construction;

(c) Consult with the department prior to deviating from approved documents;

(d) Provide a written construction project completion notice to the department indicating:

(i) The expected completion date; and

(ii) Compliance with the approved construction documents, requirements of chapter 18.20 RCW and this chapter;

(e) Make adequate provisions for the health, safety, and comfort of patients during construction projects;

(f) Obtain authorization from the department prior to occupying or using new construction; and

(g) Obtain approval of the Washington state fire protection services division prior to construction, modification, and alteration consistent with RCW 18.20.130.

[Statutory Authority: Chapter 71.12 RCW and RCW 43.60.040. 95-22-013, § 246-324-250, filed 10/20/95, effective 11/20/95.]

WAC 246-324-500 Exemptions. (1) A licensee wishing to request an exemption from a requirement in this chapter shall submit a written request to the department, including:

(a) A description of the requested exemption;

(b) Reason for the exemption; and

(c) Impact of the exemption on patient or public health and safety.

(2) If the department determines the exemption will not jeopardize patient or public health or safety, and is not contrary to the intent of chapter 71.12 RCW and this chapter, the department may:

(a) Exempt the licensee from meeting a specific requirement in this chapter; or

(b) Allow the licensee to use another method of meeting the requirement.

(3) The licensee shall retain a copy of each approved exemption in the hospital.

[Statutory Authority: Chapter 71.12 RCW and RCW 43.60.040. 95-22-013, § 246-324-500, filed 10/20/95, effective 11/20/95.]

WAC 246-324-990 Fees. This section establishes the licensure fee for private alcohol and chemical dependency hospitals licensed under chapter 71.12 RCW.

(1) Applicants and licensees shall submit:

(a) An initial fee of seventy dollars and zero cents for each bed space within the proposed licensed bed capacity; and

(b) An annual renewal fee of seventy dollars and zero cents for each licensed bed space.

(2) Refunds. The department shall refund fees paid by the applicant for initial licensure if:

(a) The department has received an application but has not conducted an on-site survey or provided technical assistance, the department will refund two-thirds of the fees paid, less a fifty dollar processing fee.

(b) The department has received an application and has conducted an on-site survey or provided technical assistance, the department will refund one-third of the fees paid, less a fifty dollar processing fee.

(c) The department will not refund fees if:

(i) The department has conducted more than one on-site visit for any purpose;

(ii) One year has elapsed since an initial licensure application is received by the department, and the department has not issued the license because applicant has failed to complete requirements for licensure; or

(iii) The amount to be refunded as calculated by (a) or (b) of this subsection is ten dollars or less.

[Statutory Authority: RCW 43.70.250. 07-17-174, § 246-324-990, filed 8/22/07, effective 9/22/07; 05-18-073, § 246-324-990, filed 9/7/05, effective 10/8/05. Statutory Authority: RCW 43.70.250, 18.46.030, 43.70.110, 71.12.470. 04-19-141, § 246-324-990, filed 9/22/04, effective 10/23/04. Statutory Authority: RCW 43.70.250 and 70.38.105(5). 03-22-020, § 246-324-990, filed 10/27/03, effective 11/27/03. Statutory Authority: RCW 43.70.250. 02-13-061, § 246-324-990, filed 6/14/02, effective 7/15/02. Statutory Authority: RCW 71.12.470, 43.70.110 and 43.70.250. 01-15-092, § 246-324-990, filed 7/18/01, effective 8/18/01. Statutory Authority: RCW 43.70.250 and 43.20B.020. 99-24-060, § 246-324-990, filed 11/29/99, effective 12/30/99. Statutory Authority: Chapter 71.12 RCW and RCW 43.60.040. 95-22-013, § 246-324-990, filed 10/20/95, effective 11/20/95.]

Chapter 246-329 WAC
CHILDBIRTH CENTERS

WAC

246-329-005 Scope and purpose.
246-329-010 Definitions.
246-329-020 Licensure.
246-329-025 Exemptions, alternative methods, and interpretations.
246-329-030 Governance.
246-329-045 Applicant or licensee rights and responsibilities.
246-329-055 Department responsibilities.
246-329-065 New construction—Major alterations.
246-329-075 Criminal history, disclosure, and background inquiries.
246-329-085 Client bill of rights.
246-329-095 Staffing.
246-329-110 Personnel policy and procedures and records.
246-329-120 Birth center policies and procedures.
246-329-130 Birth center equipment and supplies.
246-329-140 Client records.
246-329-150 Pharmaceuticals.
246-329-160 Birth center—Physical environment.
246-329-170 Emergency preparedness.
246-329-180 Quality improvement.
246-329-990 Fees.

DISPOSITION OF SECTIONS FORMERLY CODIFIED IN THIS CHAPTER

246-329-001 Purpose. [Statutory Authority: RCW 43.70.040. 91-02-049 (Order 121), recodified as § 246-329-001, filed 12/27/90, effective 1/31/91. Statutory Authority: RCW 18.46.060. 86-04-031 (Order 2338), § 248-29-001, filed 1/29/86. Statutory Authority: RCW 43.20.050. 80-05-099 (Order 197), § 248-29-001, filed 5/2/80.] Repealed by 97-20-101, filed 9/29/97, effective 10/30/97. Statutory Authority: RCW 43.70.040.

246-329-035 Criminal history, disclosure, and background inquiries. [Statutory Authority: RCW 43.43.830 through 43.43.842. 93-16-030 (Order 381), § 246-329-035, filed 7/26/93, effective 8/26/93.] Repealed by 07-07-075, filed 3/16/07, effective 4/16/07. Statutory Authority: Chapter 18.46 RCW and RCW 43.70.040.

246-329-040 Personnel, clinical staff, and volunteers who work directly with clients. [Statutory Authority: RCW 43.70.040. 91-02-049 (Order 121), recodified as § 246-329-040, filed 12/27/90, effective 1/31/91. Statutory Authority: RCW 18.46.060. 86-04-031 (Order 2338), § 248-29-040, filed 1/29/86. Statutory Authority: RCW 43.20.050. 80-05-099 (Order 197), § 248-29-040, filed 5/2/80.] Repealed by 07-07-075, filed 3/16/07, effective 4/16/07. Statutory Authority: Chapter 18.46 RCW and RCW 43.70.040.

246-329-050 HIV/AIDS education and training. [Statutory Authority: RCW 18.46.060 and 70.24.310. 92-02-018 (Order 224), § 246-329-050, filed 12/23/91, effective 1/23/92. Statutory Authority: RCW 43.70.040. 91-02-049 (Order 121), recodified as § 246-329-050, filed 12/27/90, effective 1/31/91. Statutory Authority: RCW 70.24.310. 89-21-038 (Order 3), § 248-29-045, filed 10/12/89, effective 11/12/89.] Repealed by 07-07-075, filed 3/16/07, effective 4/16/07. Statutory Authority: Chapter 18.46 RCW and RCW 43.70.040.

246-329-060 Birth center policies and procedures. [Statutory Authority: RCW 18.46.060. 92-02-018 (Order 224), § 246-329-060, filed 12/23/91, effective 1/23/92. Statutory Authority: RCW 43.70.040. 91-02-049 (Order 121), recodified as § 246-329-060, filed 12/27/90, effective 1/31/91. Statutory Authority: RCW 18.46.060. 86-04-031 (Order 2338), § 248-29-050, filed 1/29/86; 83-07-017 (Order 256), § 248-29-050, filed 3/10/83. Statutory Authority: RCW 43.20.050. 82-06-011 (Order 226), § 248-29-050, filed 2/22/82; 80-05-099 (Order 197), § 248-29-050, filed 5/2/80.] Repealed by 07-07-075, filed 3/16/07, effective 4/16/07. Statutory Authority: Chapter 18.46 RCW and RCW 43.70.040.

246-329-070 Birth center equipment and supplies. [Statutory Authority: RCW 43.70.040. 91-02-049 (Order 121), recodified as § 246-329-070, filed 12/27/90, effective 1/31/91. Statutory Authority: RCW 18.46.060. 86-04-031 (Order 2338), § 248-29-060, filed 1/29/86. Statutory Authority: RCW 43.20.050. 80-05-099 (Order 197), § 248-29-060, filed 5/2/80.] Repealed by 07-07-075, filed 3/16/07, effective 4/16/07. Statutory Authority: Chapter 18.46 RCW and RCW 43.70.040.

246-329-080 Records. [Statutory Authority: RCW 43.70.040. 91-02-049 (Order 121), recodified as § 246-329-080, filed 12/27/90, effective 1/31/91. Statutory Authority: RCW 18.46.060. 86-04-031 (Order 2338), § 248-29-070, filed 1/29/86. Statutory Authority: RCW 43.20.050. 80-05-099 (Order 197), § 248-29-070, filed 5/2/80.] Repealed by 07-07-075, filed 3/16/07, effective 4/16/07. Statutory Authority: Chapter 18.46 RCW and RCW 43.70.040.

246-329-090 Pharmaceuticals. [Statutory Authority: RCW 43.70.040. 91-02-049 (Order 121), recodified as § 246-329-090, filed 12/27/90, effective 1/31/91. Statutory Authority: RCW 18.46.060. 86-04-031 (Order 2338), § 248-29-080, filed 1/29/86. Statutory Authority: RCW 43.20.050. 80-05-099 (Order 197), § 248-29-080, filed 5/2/80.] Repealed by 07-07-075, filed 3/16/07, effective 4/16/07. Statutory Authority: Chapter 18.46 RCW and RCW 43.70.040.

246-329-100 Birth center—Physical environment. [Statutory Authority: RCW 18.46.060. 92-02-018 (Order 224), § 246-329-100, filed 12/23/91, effective 1/23/92. Statutory Authority: RCW 43.70.040. 91-02-049 (Order 121),

recodified as § 246-329-100, filed 12/27/90, effective 1/31/91. Statutory Authority: RCW 18.46.060. 86-04-031 (Order 2338), § 248-29-090, filed 1/29/86. Statutory Authority: RCW 43.20.050. 80-05-099 (Order 197), § 248-29-090, filed 5/2/80.] Repealed by 07-07-075, filed 3/16/07, effective 4/16/07. Statutory Authority: Chapter 18.46 RCW and RCW 43.70.040.

WAC 246-329-005 Scope and purpose. (1) These rules implement chapter 18.46 RCW which requires the department of health to set minimum health and safety standards for childbirth centers.

(2) Applicants and licensees must meet the requirements of this chapter and other applicable state and local laws.

(3) This chapter does not apply to services provided by persons exempt from requirements of chapter 18.46 RCW.

(4) A childbirth center may not provide services unless the childbirth center is licensed under this chapter.

[Statutory Authority: Chapter 18.46 RCW and RCW 43.70.040. 07-07-075, § 246-329-005, filed 3/16/07, effective 4/16/07.]

WAC 246-329-010 Definitions. For purposes of this chapter, the following words and phrases will have the following meanings unless the context clearly indicates otherwise:

(1) "Administration of drugs" means an act in which a single dose of a prescribed drug or biological is given to a client by an authorized person in accordance with all laws and rules governing these acts. The complete act of administration entails removing an individual dose from a previously dispensed, properly labeled container, including a unit dose container, verifying it with the orders of a practitioner who is legally authorized to prescribe, giving the individual dose to the proper client and properly recording the time and dose given.

(2) "Applicant" means a person seeking licensure as a childbirth center under this chapter.

(3) "Authenticated or authentication" means authorization of a written entry in a record by means of a signature which shall include, minimally, first initial, last name, and title or unique identifier verifying accuracy of information.

(4) "Bathing facility" means a bathtub or shower.

(5) "Birthing center" or "childbirth center" or "birth center" means any health facility, not part of a hospital or in a hospital, that provides facilities and clinical staff to support a birth service to low risk maternity clients. This chapter does not apply to any hospital approved by the American College of Surgeons, American Osteopathic Association, or its successor.

(6) "Birthing room" means a room designed, equipped, and arranged to provide for the care of a woman and newborn and to accommodate her support person or persons during the process of vaginal childbirth, (the three stages of labor and recovery of a woman and newborn).

(7) "Birth service" means the prenatal, intrapartum, and postpartum care provided for low-risk maternity clients, including newborn care during transition and stabilization.

(8) "Client" means a woman, fetus, and newborn receiving care and services provided by a birth center during pregnancy and childbirth and recovery.

(9) "Clinical staff" means physicians and midwives, including contractors, appointed by the governing body to practice within the birth center and governed by rules and policies and procedures approved by the governing body.

(10) "Consultation" means the process used by the clinical staff of a childbirth center who maintain primary management responsibilities for the client's care to seek the opinion of a licensed physician on clinical issues that are client specific. The physician consulted must be qualified by training and experience in specific client need for which consultation is sought. Consultation, appropriate to client need, must be available during all times birth services are provided in a childbirth center.

(11) "Contractor" means an individual who has a written contract with a birth center licensee to provide birth services. The written contract must be approved by the governing body, including appointment of clinical privileges by the governing body. Birth services provided by contractors in licensed birth centers must meet requirements of this chapter, unless otherwise noted.

(12) "Department" means the Washington state department of health.

(13) "Emergency" means a medical emergency or injury requiring immediate medical or surgical intervention to prevent death or disability.

(14) "Emergency transfer" means the transfer of a maternal client or newborn in an emergent situation to a facility that can manage obstetrical and neonatal emergencies, including the ability to perform cesarean delivery.

(15) "Governing body" means the person or persons responsible for establishing and approving the purposes and policies and procedures of the childbirth center.

(16) "Hospital" means any institution, place, building, or agency which provides accommodations, facilities, and services over a continuous period of twenty-four hours or more, for observation, diagnosis, or care, of two or more individuals not related to the operator or suffering from any other condition which obstetrical, medical, or surgical services would be appropriate for care or diagnosis. "Hospital" as used in this definition includes facilities licensed under chapter 70.41 RCW. "Hospital" as used in this definition does not include:

(a) Hotels, or similar places furnishing only food and lodging, or simply, domiciliary care;

(b) Clinics or physicians' offices where patients are not regularly kept as bed patients for twenty-four hours or more;

(c) Nursing homes, defined and licensed under chapter 18.51 RCW;

(d) Childbirth centers licensed under this chapter and chapter 18.46 RCW;

(e) Psychiatric hospitals, licensed under chapter 71.12 RCW; or

(f) Any other hospital or institution specifically intended for use and the diagnosis and care of those suffering from mental illness, mental retardation, convulsive disorders, or other abnormal mental conditions. Nothing in this definition shall be construed as authorizing the supervision, regulation, or control of the remedial care or treatment of residents or patients in any hospital conducted for those who rely primarily upon treatment by prayer or spiritual means in accordance with creed or tenets of any well-recognized church or religious denomination.

(17) "Lavatory" means a plumbing fixture designed and equipped with a handwash device.

(18) "Low-risk maternal client" means an individual who:

(a) Is at term gestation, in general good health with uncomplicated prenatal course and participating in ongoing prenatal care, and prospects for a normal uncomplicated birth as defined by reasonable and generally accepted criteria of maternal and fetal health;

(b) Has no previous major uterine wall surgery, cesarean section, or obstetrical complications likely to recur;

(c) Has no significant signs or symptoms of anemia, active herpes genitalia, placenta praevia, known noncephalic presentation during active labor, pregnancy-induced hypertension, persistent polyhydramnios or persistent oligohydramnios, abruptio placenta, chorioamnionitis, known multiple gestation, intrauterine growth restriction, or substance abuse;

(d) Is in progressive labor; and

(e) Is appropriate for a setting where methods of anesthesia are limited.

(19) "Midwife" means a person licensed under chapter 18.79 RCW, or chapter 18.50 RCW, Midwifery.

(20) "New construction" means any of the following:

(a) New buildings to be used as a birth center;

(b) Addition or additions to an existing building or buildings to be used as a childbirth center;

(c) Conversion of existing buildings or portions thereof for use as a childbirth center;

(d) Alterations or modifications other than minor alterations. "Minor alterations" means any structural or physical modification within an existing birth center which does not change the approved use of a room or an area. Minor alterations performed under this definition do not require prior review of the department; however, this does not constitute a release from other applicable requirements;

(e) Changes in the approved use of rooms or areas of the birth center.

(21) "Person" means any individual, firm, partnership, corporation, company, association, or joint stock association, and the legal successor thereof.

(22) "Personnel" means individuals employed by the birth center, contractors of the birth center, students and volunteers.

(23) "Physician" means a person licensed under chapter 18.71 RCW, "Physicians," and rules adopted under chapter 246-919 WAC or chapter 18.57 RCW, "Osteopathy—Osteopathic medicine and surgery," and rules adopted under chapter 246-853 WAC.

(24) "Referral" means the process by which the clinical staff of a childbirth center directs the client to a physician for management of a particular problem or aspect of the client's care.

(25) "Registered nurse" means a person licensed under chapter 18.79 RCW, and rules adopted under chapter 246-840 WAC.

(26) "Recovery" means that period or duration of time starting at birth and ending with discharge of a client from the birth center or the period of time between the birth and the time a client leaves the premises of the birth center.

(27) "Shall" means compliance is mandatory.

(28) "Support person" means the individual or individuals selected or chosen by a maternal client to provide emotional support and to assist her during the process of labor and childbirth.

(29) "Toilet" means a room containing at least one water closet.

(30) "Transfer of care" means the process by which the clinical staff of a childbirth center directs the client or newborn to a physician or other licensed health care provider for complete management of client's care. Transfer of care to an appropriate obstetrical department, patient care area or hospital, or physician(s) qualified in obstetrics or newborn/pediatric care respectively with admitting privileges to a hospital must be available twenty-four hours per day.

(31) "Volunteer" means an individual who is an unpaid worker in the birth center, other than a support person.

(32) "Water closet" means a plumbing fixture for defecation fitted with a seat and a device for flushing the bowl of the fixture with water.

[Statutory Authority: Chapter 18.46 RCW and RCW 43.70.040. 07-07-075, § 246-329-010, filed 3/16/07, effective 4/16/07. Statutory Authority: RCW 18.46.060. 92-02-018 (Order 224), § 246-329-010, filed 12/23/91, effective 1/23/92. Statutory Authority: RCW 43.70.040. 91-02-049 (Order 121), recodified as § 246-329-010, filed 12/27/90, effective 1/31/91. Statutory Authority: RCW 18.46.060. 86-04-031 (Order 2338), § 248-29-010, filed 1/29/86. Statutory Authority: RCW 43.20.050. 80-05-099 (Order 197), § 248-29-010, filed 5/2/80.]

WAC 246-329-020 Licensure. A person must possess a current birth center license issued by the department before advertising, operating, managing, conducting, opening or maintaining a childbirth center unless exempt under chapter 18.46 RCW.

(1) Application for license. An applicant for initial licensure of a childbirth center must:

(a) Submit a completed application on forms provided by the department;

(b) Submit disclosure statements and criminal history background checks no older than three months preceding the application date for the administrator, owner and director of services in accordance with RCW 43.43.830 through 43.43.845;

(c) Submit the following information:

(i) Name of managing personnel, officers, administrator, director of clinical services or supervisor of clinical services, and partners or individuals owning ten percent or more of the applicant's voting stock;

(ii) A description of the organizational structure;

(iii) Name, address, and phone numbers of all office locations that provide services within the state;

(iv) A copy of the current business license(s);

(d) Submit evidence of completion of the department's construction review process;

(e) Submit evidence of compliance with local codes and ordinances;

(f) Submit evidence of approval of the state fire marshal as required per RCW 18.46.110;

(g) Submit evidence that a certificate of occupancy by the local building official has been approved and issued;

(h) Submit other information as required by the department;

(i) Submit fees as specified in WAC 246-329-990;

(j) Furnish to the department full and complete information and promptly report any changes which would affect the

current accuracy of this information as to the identity of each officer and director of the corporation, if the birth center is operated by a legally incorporated entity, profit or nonprofit, and of each partner if the birth center is operated through a legal partnership;

(k) Develop and approve policies and procedures addressing the content of this chapter; and

(l) Meet the requirements of this chapter as determined by an initial survey conducted by the department.

(2) License renewal.

(a) A license, unless suspended or revoked, shall be renewed annually.

Applications for renewal must be on forms provided by the department and must be filed with the department not less than thirty days prior to expiration and must also include disclosure statements and criminal history background checks no older than three months preceding the renewal date for the administrator, owner and director of services when these individuals are new to the birth center since initial licensure or last renewal, in accordance with RCW 43.43.830 through 43.43.845.

(b) The department may inspect and investigate each childbirth center every twenty-four months or as needed to determine compliance with these rules and chapter 18.46 RCW.

(c) Each license shall be issued only for the premises and persons named. Licenses shall be transferrable or assignable only with written approval by the department.

(d) Licenses must be posted in a conspicuous place on the licensed premises.

(3) Change of ownership. At least thirty days prior to changing ownership of a childbirth center:

(a) The licensee must submit in writing to the department:

(i) The full name, address and phone number of the current and prospective owner;

(ii) The name, address, and phone number of the currently licensed childbirth center and the name under which the prospective agency will operate;

(iii) Date of the proposed change of ownership; and

(iv) Any changes in the office location, if relevant;

(b) The prospective new owner must submit:

(i) Information listed in subsection (1)(b) through (c) of this section; and

(ii) The change of ownership fee specified in WAC 246-329-990.

[Statutory Authority: Chapter 18.46 RCW and RCW 43.70.040. 07-07-075, § 246-329-020, filed 3/16/07, effective 4/16/07. Statutory Authority: RCW 18.46.060 and 34.05.220. 92-02-018 (Order 224), § 246-329-020, filed 12/23/91, effective 1/23/92. Statutory Authority: RCW 43.70.040. 91-02-049 (Order 121), recodified as § 246-329-020, filed 12/27/90, effective 1/31/91. Statutory Authority: Chapter 34.05 RCW, RCW 34.05.220 (1)(a) and 18.46.060. 90-06-019 (Order 039), § 248-29-020, filed 2/28/90, effective 3/1/90. Statutory Authority: RCW 18.46.060. 86-04-031 (Order 2338), § 248-29-020, filed 1/29/86; 83-07-016 (Order 255), § 248-29-020, filed 3/10/83. Statutory Authority: RCW 43.20.050. 80-05-099 (Order 197), § 248-29-020, filed 5/2/80.]

WAC 246-329-025 Exemptions, alternative methods, and interpretations. The purpose of this section is to provide birth centers a mechanism to request an interpretation, exemption, or approval to use an alternative method. This chapter is not intended to prevent use of any systems, materials, alternate design, or methods of construction as alternatives to those prescribed by these rules.

(1) A birth center requesting exemption from this chapter must submit a written request to the department asking for an exemption. The request must specify the section or sections, explain the reason for the exemption and, when appropriate, include supporting documentation.

(2) A birth center requesting approval for use of alternative materials, design, and methods must submit a written request to the department asking for approval to use an alternative. The request must explain the reason(s) for the use of an alternative and must be supported by technical documentation.

(3) The department may:

(a) Exempt a birth center from complying with portions of this chapter when:

(i) The exemption is not contrary to the intent of chapter 18.46 RCW and the requirements of these rules.

(ii) After review and consideration, the department determines the exemption will not:

(A) Negate the purpose and intent of these rules;

(B) Place the safety or health of the patients in the birth center in jeopardy;

(C) Lessen any fire and life safety or infection control provision of other codes or regulations; and

(D) Affect any structural integrity of the building;

(b) Approve the use of alternative materials, designs, and methods when:

(i) The birth center complies with subsection (2) of this section; and

(ii) After review and consideration, such alternative:

(A) Meets the intent and purpose of these rules; and

(B) Is at least equivalent to the methods prescribed in these rules.

(4) A birth center requesting an interpretation of rule contained in this chapter must submit a written request to the department. The request must specify the section or sections for which an interpretation is needed and details of the circumstances to which the rule is being applied. The birth center must provide any other information the department deems necessary.

(5) The department will, in response to a written request, send a written interpretation of a rule or regulation within thirty calendar days after the department has received complete information relevant to the requested interpretation.

(6) The department and birth center will keep a copy of each exemption or alternative granted or interpretation issued under this section on file and available at all times.

[Statutory Authority: Chapter 18.46 RCW and RCW 43.70.040. 07-07-075, § 246-329-025, filed 3/16/07, effective 4/16/07.]

WAC 246-329-030 Governance. The purpose of this section is to provide organizational guidance and oversight and to ensure resources and staff to support safe and adequate patient care.

(1) The birth center shall have a governing body.

(2) The governing body shall be responsible for providing personnel, facilities, equipment, supplies, and special services to meet the needs of the clients.

(3) The governing body shall adopt policies for the care of clients within or on the premises of the birth center.

(4) The governing body shall appoint an administrator or director responsible for implementing the policies adopted by the governing body.

(5) The governing body shall establish and maintain a current written organizational plan which includes all positions and delineates responsibilities, authority, and relationship of positions within the birth center.

(6) The governing body shall have the authority and responsibility for appointments and reappointments of clinical staff, approval of written contracts and appointment of contractors, approval of clinical bylaws and to ensure that only members of the clinical staff admit clients to the birth center.

(a) Each birth center shall have access to physician consultation and appropriate clinical services as defined in WAC 246-329-095(2).

(b) Each physician and midwife, including contractors, appointed to the clinical staff shall provide evidence of current licensure in the state of Washington.

(c) Members of the clinical staff shall develop and adopt bylaws, policies, and procedures subject to the approval of the governing body including requirements for clinical staff membership; delineation of clinical privileges and the organization of clinical staff.

(7) The governing body shall be responsible for assuring a quality improvement program is implemented according to WAC 246-329-180.

(8) The governing body shall have responsibility for the legal and financial management of the birth center.

[Statutory Authority: Chapter 18.46 RCW and RCW 43.70.040. 07-07-075, § 246-329-030, filed 3/16/07, effective 4/16/07. Statutory Authority: RCW 18.46.060. 92-02-018 (Order 224), § 246-329-030, filed 12/23/91, effective 1/23/92. Statutory Authority: RCW 43.70.040. 91-02-049 (Order 121), recodified as § 246-329-030, filed 12/27/90, effective 1/31/91. Statutory Authority: RCW 18.46.060. 86-04-031 (Order 2338), § 248-29-030, filed 1/29/86. Statutory Authority: RCW 43.20.050. 80-05-099 (Order 197), § 248-29-030, filed 5/2/80.]

WAC 246-329-045 Applicant or licensee rights and responsibilities. This section describes the applicant or licensee's responsibilities in the fulfillment of the requirements of this chapter.

(1) An applicant or licensee must:

(a) Comply with chapter 18.46 RCW and this chapter;

(b) Establish, implement and periodically review all policies and procedures which address the contents of this chapter;

(c) Display the license issued by the department in an area accessible to the public;

(d) Notify the department in writing:

(i) Within thirty days of changes of an administrator, owner or the director of clinical services;

(ii) Thirty or more days before ceasing operations;

(e) Cooperate with the department during surveys which may include reviewing licensee and client records and conducting client interviews with client consent;

(f) Respond to a statement of deficiencies by submitting to the department:

(i) A written plan of correction, within ten working days of receipt. The applicant or licensee must complete all corrections within sixty days after the survey exit date, unless otherwise specified by the department; and

(ii) A progress report describing corrections made and ongoing monitoring actions, within ninety days after the survey exit date, unless the department specifies another date.

(2) An applicant or licensee may:

(a) Discuss findings observed during a survey with the surveyor; and

(b) Discuss the statement of deficiencies with the department's manager.

(3) As required by chapter 70.56 RCW, the licensed childbirth center shall notify the department if any of the following events have been confirmed to have occurred in the birth center:

(a) An infant abduction or discharge to the wrong family;

(b) Sexual assault or rape of a patient or staff member while in the birth center;

(c) Maternal death or serious disability with labor or delivery in a low-risk pregnancy while being cared for in a health care facility;

(d) Patient death or serious disability associated with:

(i) The use of contaminated drugs, devices, or biologics provided by the health care facility;

(ii) The use or function of a device in which the device is used or functions other than as intended;

(iii) Intravascular air embolism that occurs while being cared for in a health care facility;

(iv) A medication error (errors involving wrong drug, wrong dose, wrong patient, wrong time, wrong rate, wrong preparation or wrong route of administration);

(v) Hypoglycemia, the onset of which occurs while the patient is being cared for in a health care facility;

(vi) Failure to identify and treat hyperbilirubinimia in neonates;

(vii) An electric shock while being cared for in a health care facility; or

(viii) A burn incurred from any source while being cared for in a health care facility.

(e) Any incident in which a line designated for oxygen or other gas to be delivered to a patient contains the wrong gas or is contaminated by toxic substances;

(f) Patient suicide, or attempted suicide resulting in serious disability, that occurs while the patient is receiving care in a health care facility;

(g) Death or significant injury of a patient or staff member resulting from physical assault that occurs within or on the grounds of a health care facility;

(h) Any instance of care ordered by someone impersonating a physician, nurse, pharmacist or other licensed health care provider;

(i) Patient death associated with a fall while being cared for in a health care facility;

(j) Patient death or serious disability associated with the use of restraints or bedrails while being cared for in a health care facility; and

(k) Sexual assault on a patient within or on the grounds of a health care facility.

(4) The licensed childbirth center must also notify the department if either of the following events have been confirmed to have occurred in the birth center:

(a) An unanticipated death, stillbirth or major loss of function; or

(b) Any catastrophic incident, such as fire or flood, or any incident which may cause interruption or cessation of the delivery of services, or another interruption of services which would affect the health and safety of the client.

(5) The report required in subsection (3) and (4) of this section must be submitted in writing to the department as required by chapter 70.56 RCW. The birth center is encouraged to confirm these events through a review or assessment by the birth center's quality improvement or risk management process. Each notice to the department must include:

(a) The licensee's name;

(b) The name of the affected client, if applicable;

(c) The date the event occurred;

(d) A description of the event and a clinical summary if the event is client-related;

(e) Root cause analysis and corrective action plans as required by chapter 70.56 RCW.

(6) The report note in subsection (3) of this section:

(a) Will allow the department to be informed of events which in the interest of the public will be reviewed and reported as required by chapter 70.56 RCW;

(b) Will be confidentially maintained by the department in accordance with the protections of the Public Disclosure Act, chapter 42.17 RCW, and other applicable laws and reporting requirements; and

(c) Does not relieve a birth center from complying with other applicable reporting or notification requirements of this chapter or those requirements relating to law enforcement or professional regulatory agencies.

(7) An applicant or licensee has the right to respond to and contest a statement of charges according to the following provisions:

(a) RCW 43.70.115, department of health authority for license approval, denial, restriction, conditioning, modification, suspension and revocation;

(b) Chapter 34.05 RCW, the Administrative Procedure Act; and

(c) Chapter 246-10 WAC, Adjudicative proceedings.

[Statutory Authority: Chapter 18.46 RCW and RCW 43.70.040. 07-07-075, § 246-329-045, filed 3/16/07, effective 4/16/07.]

WAC 246-329-055 Department responsibilities. This section describes the department's responsibilities in the fulfillment of the requirements of this chapter:

(1) The department may, in accordance with chapter 18.46 RCW:

(a) Issue an initial license for twelve months following submission of a completed application and appropriate fee, and following a survey that documents the applicant meets all the requirements of this chapter;

(b) Issue a renewal license for the twelve-month period following submission of a completed application and appropriate fee;

(c) Issue a license for change of ownership to the new license for the remainder of the current license period following submission of the required information and appropriate fee, under WAC 246-329-990.

(2) The department may:

(a) Conduct surveys and investigations every twenty-four months or as needed to determine compliance with chapter 18.46 RCW and this chapter. Surveys and investigations may be announced or unannounced;

(b) Investigate any person suspected of:

(i) Advertising, operating, managing, conducting, opening or maintaining a childbirth center without a license unless exempt from licensure under chapter 18.46 RCW; or

(ii) Survey a licensee at anytime if the department has reason to believe the licensee is providing unsafe, insufficient, inadequate or inappropriate care;

(c) Investigate allegations of noncompliance with RCW 43.43.830 through 43.43.845, when necessary, in consultation with law enforcement personnel;

(d) Require licensees to complete additional disclosure statements and background inquiries for an individual associated with the licensee or having direct contact with children under sixteen years of age, people with developmental disabilities, or vulnerable adults if the department has reason to believe that offenses specified under RCW 43.43.830 have occurred since completion of the previous disclosure statement and criminal background inquiry; and

(e) Issue a statement of deficiencies following a survey which identifies noncompliance with chapter 18.46 RCW and this chapter.

(3) The department may deny, suspend, or revoke a license if the applicant or licensee fails or refuses to comply with the requirements of chapter 18.46 RCW and/or these rules. The department's notice of denial, suspension, modification, or revocation of a license shall be consistent with RCW 43.70.115. An applicant or license holder has the right to an adjudicative proceeding to contest the decision.

(4) The department may prepare and serve upon the licensee or applicant at the earliest practical time a statement of charges following a survey which identifies noncompliance with chapter 18.46 RCW and this chapter. The statement of charges must include a notice that the licensee or applicant may request a hearing to contest the charges.

[Statutory Authority: Chapter 18.46 RCW and RCW 43.70.040. 07-07-075, § 246-329-055, filed 3/16/07, effective 4/16/07.]

WAC 246-329-065 New construction—Major alterations. The purpose of this section is to provide minimum standards for a safe and efficient patient care environment consistent with other rules. The rules are intended to allow flexibility in achieving desired outcomes and enable birth centers to respond to changes in technologies and health care innovations.

(1) When a licensee or applicant is contemplating new construction or major alteration, the licensee or applicant shall:

(a) Under chapters 70.40 RCW and 246-329 WAC, submit an application and construction documents to the department's construction review services program for all new construction and major alterations, as defined in WAC 246-329-010. In addition to the application and construction documents, the construction review services program may require documentation of approval from local zoning commissions, fire departments, and building departments, if applicable;

(b) Respond in writing when the department requests additional or corrected construction documents;

(c) Not begin construction until the construction documents are approved by the local jurisdictions and same local jurisdictions have issued any required permits;

(d) Complete construction consistent with the final "department approved" documents;

(e) Notify the department in writing when construction is completed; and

(f) Submit to the department a copy of the local jurisdictions' certificate of occupancy.

(2) A childbirth center applicant or licensee must, through its design, construction and necessary permits demonstrate compliance with the following codes and local jurisdiction standards:

(a) The state building code as adopted by the state building code council.

(b) *Accepted Procedure and Practice in Cross-contamination Control, Pacific Northwest Edition, 9th Edition, American Waterworks Association*; and

(c) If planning on caring for patients with mycobacterium tuberculosis, *Guidelines for Preventing the Transmission of Mycobacterium Tuberculosis in Health Care Facilities, 1994. Morbidity and Mortality Weekly Report (MMWR)*, Volume 43, October 28, 1994.

[Statutory Authority: Chapter 18.46 RCW and RCW 43.70.040. 07-07-075, § 246-329-065, filed 3/16/07, effective 4/16/07.]

WAC 246-329-075 Criminal history, disclosure, and background inquiries. The purpose of this section is to ensure criminal history background inquiries are conducted for any employee or prospective employee who has or will have unsupervised access to children, vulnerable adults, and individuals with developmental disabilities.

(1) A childbirth center applicant or licensee must establish and implement policies and procedures regarding Washington state patrol criminal background inquiries and disclosure statements under RCW 43.43.830 through 43.43.845 for the administrator, owner, director of services and personnel, contractors, volunteers, students, and any other individual associated with the licensee having direct contact with children under sixteen years of age, individuals with developmental disabilities, or vulnerable adults.

(2) The department may require licensees to complete additional disclosure statements or background inquiries for a person associated with the licensed facility having direct contact with vulnerable adults if the department has reason to believe that offenses specified under RCW 43.43.830 have occurred since completion of the previous disclosure statement or background inquiry.

[Statutory Authority: Chapter 18.46 RCW and RCW 43.70.040. 07-07-075, § 246-329-075, filed 3/16/07, effective 4/16/07.]

WAC 246-329-085 Client bill of rights. The purpose of this section is to help improve patient outcomes by respecting each client and conducting all relationships with clients and the public in an ethical manner.

The birth center at the time of registration, including clients of contractors, must provide each client with a written bill of rights, verified by client or representative signature, affirming each individual's rights to:

(1) A listing of the services provided by the birth center and a description of other levels of maternal/fetal services available in the community;

(2) Be informed of the policy and procedures for admission and discharge;

(3) Be informed of the definition of a low risk maternal client, the benefits and risks of out-of-hospital labor and birth and complete a written informed consent, prior to the onset of labor that shall include, but not be limited to, evidence of an explanation by personnel of the birth services offered and potential risks and emergency transfer and transport procedures;

(4) Be informed of what constitutes being ineligible for birth center services and the transfer policy and procedures of clients who, during the course of pregnancy or labor or recovery, are determined to be ineligible, including the birth center's plan for provisions of emergency and nonemergency care in the event of complications to mother and newborn;

(5) Be informed that unexpected neonatal emergencies requiring complex resuscitation are rare, but can occur. Be informed that the birth center staff is prepared to provide initial steps of newborn resuscitation (upper airway clearance with a bulb or mechanical suction) and provide bag-and-mask ventilation until emergency medical service providers arrive to provide complete resuscitation procedures if required;

(6) Participate in decisions relating to the plan for management of care and all changes in that plan once established including consultation, referral and transfer to other practitioners or other levels of care;

(7) Be informed of the policy and procedures for consultation, referral, transfer of care and transport of a newborn and maternal client to a hospital where appropriate care is available;

(8) Be informed of prenatal screening under chapter 70.54 RCW and chapter 246-680 WAC;

(9) Be informed of newborn screening requirements under chapter 70.83 RCW and chapter 246-650 WAC, including a provision of a copy of the parent information pamphlet "*Newborn Screening Tests and Your Baby*" which is available from the department's newborn screening program;

(10) Be informed that rapid HIV testing is available for all maternal clients without a documented history of HIV testing during prenatal care;

(11) Be informed of prophylactic treatment of the eyes of the newborn in accordance with WAC 246-100-206 (6)(b);

(12) Be informed that vitamin K administration for the newborn is available;

(13) Be informed that newborn hearing screening tests are offered in most hospitals;

(14) A description of the process for submitting and addressing complaints;

(15) Submit complaints without retaliation and to have the complaint addressed by the licensee;

(16) Be informed of the state complaint hotline number;

(17) Be treated with courtesy, dignity, respect, privacy, and freedom from abuse and discrimination;

(18) Refuse treatment or services;

(19) Privacy of personal information and confidentiality of health care records;

(20) Be cared for by properly trained personnel, contractors, students and volunteers and be informed of the qualifications of clinical staff, consultants and related services and institutions;

(21) Be informed of all diagnostic procedures and reports, recommendations and treatments;

(22) A fully itemized billing statement upon request, including the date of each service and the charge;

(23) Be informed about advanced directives and the licensee's responsibility to implement them;

(24) Be informed of the client's right with regards to participation in research or student education programs;

(25) Be informed of the liability insurance coverage of practitioners on request; and

(26) Be informed of child passenger restraint systems to be used when transporting children in motor vehicles, including information describing the risks of death or serious injury associated with the failure to use a child passenger restraint system.

[Statutory Authority: Chapter 18.46 RCW and RCW 43.70.040. 07-07-075, § 246-329-085, filed 3/16/07, effective 4/16/07.]

WAC 246-329-095 Staffing. The purpose of the staffing section is to ensure the birth center provides competent staff consistent with the scope of services.

(1) The birth center shall have sufficient, qualified personnel and clinical staff to provide the services needed by clients and for safe maintenance and operation of the birth center.

(2) The birth center shall have written plans for consultation, referral, transfer of care, emergency transfer and transport of a newborn to a newborn nursery or neonatal intensive care nursery, and emergency transfer or transport of a maternal client to an appropriate obstetrical department, patient care area or hospital where appropriate care is available.

(3) The birth center shall:

(a) Employ, contract or use appropriately trained personnel and clinical staff; and

(b) Assure clinical staff or personnel have evidence of current training in neonatal and adult resuscitation.

(c) Assure a physician or midwife is present at each birth. A second person who is an employee, student or member of the clinical staff with evidence of current training in neonatal and adult resuscitation skills shall be immediately available in the birthing center during each birth.

(d) Ensure twenty-four hour coverage, including the provision that appropriate, qualified personnel and/or clinical staff shall be present in the birth center at all times when clients are present.

[Statutory Authority: Chapter 18.46 RCW and RCW 43.70.040. 07-07-075, § 246-329-095, filed 3/16/07, effective 4/16/07.]

WAC 246-329-110 Personnel policy and procedures and records. The purpose of this section is to ensure the birth center provides direction and standards in the employment, contracting and recording of personnel procedures.

(1) A childbirth center applicant or licensee must establish and implement policy and procedures which include, but are not limited to:

(a) For those birth centers operated by an employer as defined by RCW 49.60.040(3), employment criteria consistent with chapter 49.60 RCW;

(b) Job descriptions for employees, contractor agreements, volunteer responsibility statements and agreements with students commensurate with responsibilities and consent with health care professional credentialing and scope of practice as defined in relevant practice acts and associated rules;

(c) Verification of clinical staff credentials;

(d) Orientation to current agency policies and procedures and verification of skills or training for all clinical staff;

(e) Current neonatal and adult cardiopulmonary resuscitation training consistent with agency policies and procedures and community standards for all clinical staff;

(f) Infection control practices for clinical staff including communicable disease testing, immunization, vaccination and universal precautions or equivalent method of preventing the transmission of infection according to current local health authorities and shall include the availability of equipment necessary to implement plans of care and infection control policies and procedures;

(i) Birth centers must establish and implement a TB screening program for personnel;

(ii) Birth centers must provide or offer to employees Hepatitis B vaccination according to WAC 296-62-08001; and

(iii) Birth centers must assure that all contractors have received or been offered Hepatitis B vaccination according to WAC 296-62-08001;

(g) Verification of appropriate education and training of all personnel, contractors, student and volunteers on the prevention, transmission, and treatment of human immunodeficiency virus (HIV) and acquired immunodeficiency syndrome (AIDS) consistent with RCW 70.24.310;

(h) Performance evaluations of all personnel, including evaluations of contractor and student agreements to be conducted per birth center's policy and procedure; and

(i) Washington state patrol criminal background inquiries and disclosure statements under RCW 43.43.830 through 43.43.845 for the administrator, owner, director of services and personnel, contractors, volunteers, students, and any other individual associated with the licensee who has direct contact with children under sixteen years of age, people with developmental disabilities or vulnerable adults.

(2) Each employee, contractor, student and volunteer shall have a current record maintained by the birth center which contains, but is not limited to, the following information:

(a) Documentation of the items stated above in subsection (1)(b) through (e) and (g) through (i) of this section.

(b) Evidence of communicable disease testing as required by local health authorities and per birth center policy and procedures and shall include, at a minimum, documented evidence of tuberculin (TB) screening as required in WAC 246-329-110 (1)(f) and documented evidence of Hepatitis B vaccination being provided or offered according to WAC 296-62-08001.

[Statutory Authority: Chapter 18.46 RCW and RCW 43.70.040. 07-07-075, § 246-329-110, filed 3/16/07, effective 4/16/07.]

WAC 246-329-120 Birth center policies and procedures. The purpose of this section is to ensure the birth center is able to provide safe and appropriate care to the clients of the birth center.

(1) An applicant or licensee must establish and implement policy and procedures which include, but are not limited to:

(a) Definition of a low-risk maternal client who is eligible for birth services offered by the birth center.

(b) Definition of a client who is ineligible for birth services at the birth center.

(c) Identification and transfer of clients who, during the course of pregnancy, are determined to be ineligible.

(d) Identification and transfer of clients who, during the course of labor or recovery, are determined to be ineligible for continued care in the birth center.

(e) Written plans for consultation, referral and transfer of care for maternal client and newborn. Written plans for emergency transfer and transport of a newborn to a newborn nursery or neonatal intensive care nursery, and emergency transfer and transport of a maternal client to an appropriate obstetrical department, patient care area, or hospital where appropriate care is available.

(f) Transfer and discharge of neonates to minimize risk of newborn abduction.

(g) Protocol for medications and laboratory testing during labor and recovery if the birth center plans to deliver HIV positive clients.

(h) Rapid HIV testing using the opt out approach for women who have undocumented HIV test results when presenting to the birth center in labor.

(i) Protocol for electronic fetal heart monitoring or intermittent auscultation to monitor fetal status during labor.

(j) Protocol for the provision of MMR vaccine to nonimmune postpartum women.

(k) Protocol for the provision of anti D immune globulin to postpartum women who are unsensitized D-Negative and who deliver a D positive or Du positive infant.

(2) The applicant or licensee shall assure that transfer of care shall be available twenty-four hours per day to an appropriate obstetrical department, patient care area, or hospital where appropriate care is available.

(3) Clients shall receive and sign written informed consent which shall be obtained prior to the onset of labor and shall include, but is not limited to:

(a) Evidence of an explanation by personnel of the birth services offered, limitation of services, and potential risks;

(b) Explanation of the definition of low-risk maternal client;

(c) Explanation of a client who is ineligible for childbirth center services;

(d) Explanation of the birth center policies and procedures for consultation, referral, transfer of care and emergency transfer and transport;

(e) Explanation of prophylactic treatment of the eyes of the newborn in accordance with WAC 246-100-206 (6)(b);

(f) Explanation of screening of newborns under chapter 70.83 RCW and chapter 246-650 WAC; and

(g) Explanation of why rapid HIV testing is available if documentation of an HIV test during prenatal care is not available;

(h) Explanation of the need for prophylactic administration of RhIG (immune globulin) within seventy-two hours of delivery for an Rh negative mother whose newborn(s) are Rh positive.

(4) The birth center shall provide or assure:

(a) Education of clients, family and support persons in childbirth and newborn care.

(b) Plans for immediate and long-term follow-up of clients after discharge from the birth center.

(c) Registration of birth and reporting of complications and anomalies, including sentinel birth defect reporting under chapter 70.58 RCW.

(d) Prophylactic treatment of the eyes of the newborn in accordance with WAC 246-100-206 (5)(b).

(e) Collection of a newborn screening blood specimen, or signed refusal, and submission to the department's newborn screening program under the requirements of WAC 246-650-020.

(f) Rapid HIV testing when documentation of an HIV test during prenatal care is not available, unless the client refuses to give consent and the refusal is documented.

(g) For HIV positive women, the antiretroviral medications during delivery and perform or arrange appropriate lab tests.

(h) Intrapartum intravenous antibiotics for Group B Strep positive women per the CDC protocol.

(i) For Hepatitis B positive women, HBIG and Hepatitis B immunization for the newborn.

(j) Infection control to housekeeping; cleaning, sterilization, sanitization, and storage of supplies and equipment, and health of personnel and clients.

(k) Actions to take when personnel, volunteers, contractors, or patients or clients exhibit or report symptoms of a communicable disease in an infectious stage in accordance with chapter 246-100 WAC, Communicable and certain other diseases and chapter 246-101 WAC, Notifiable conditions.

(l) Authorization and administration of medications, legend drugs and devices per appropriate health profession rules.

(m) Actions to address patient or client communication needs.

(n) Reporting of patient/client abuse and neglect according to chapter 74.34 RCW.

(o) Emergency care of client.

(p) Actions to be taken upon death of a client.

(q) Plans for service delivery when natural or man-made emergencies occur that prevent normal clinical operation.

(r) Waived laboratory tests, if applicable, including the procurement of a medical test site waiver under chapter 246-338 WAC.

[Statutory Authority: Chapter 18.46 RCW and RCW 43.70.040. 07-07-075, § 246-329-120, filed 3/16/07, effective 4/16/07.]

WAC 246-329-130 Birth center equipment and supplies. The purpose of this section is to ensure the birth center provides safe and appropriate equipment and supplies necessary to the safe provision of care to the client of the birth center.

(1) The applicant or licensee shall assure the birth center has the adequate, appropriate size and type equipment and

supplies maintained for the maternal client and the newborn to include:

(a) A bed suitable for labor, birth, and recovery;

(b) Separate oxygen with flow meters and masks or equivalent;

(c) Suction equipment for the maternal client and newborn to include suction apparatus, either operated from a wall outlet or portable equipment, and bulb suction as appropriate. These devices must be immediately available in the birth center;

(d) Resuscitation equipment to include adult and neonate resuscitation bags and term and preterm size face masks, and neonatal-sized oxygen bags for assisted ventilation. Newborn resuscitation equipment shall include method to deliver free flow oxygen;

(e) Firm surfaces suitable for resuscitation;

(f) Fetal monitoring equipment, minimally to include a fetoscope, doppler or electronic monitor;

(g) Equipment for monitoring and maintaining the optimum body temperature of the newborn. A heat source appropriate for use in warming newborns shall be available, and may include an incubator;

(h) A time keeping device;

(i) Sterile suturing equipment and supplies;

(j) Glucose meter appropriately calibrated to screen glucose level in newborn;

(k) Examination lighting device with a shatterproof bulb or protective shield;

(l) Containers for soiled linen and waste materials which shall be closed or covered.

(2) A telephone or equivalent communication device must be accessible in the client care area.

(3) The licensee must clean, sterilize, disinfect and store equipment according to manufacturer guidelines and department requirements, if applicable. Clean and soiled equipment and supplies must be stored in separate areas.

(4) The applicant licensee shall provide and maintain infection control equipment and supplies for clinical staff.

[Statutory Authority: Chapter 18.46 RCW and RCW 43.70.040. 07-07-075, § 246-329-130, filed 3/16/07, effective 4/16/07.]

WAC 246-329-140 Client records. The purpose of this section is to assure the center obtains, manages, and uses information to improve patient outcomes and the performance of the birth center in patient care.

(1) The birth center shall have a defined client record system, policies and procedures which provide for identification, security, confidentiality, control, retrieval, and preservation of client care data and information.

(2) The childbirth center must maintain a health record for each maternal and newborn client in a legally acceptable, integrated and chronological document on the licensee's standardized forms consistent with chapter 70.02 RCW, Medical records—Health care information access and disclosure. Each record must include:

(a) Client's demographic information and client identification to include at a minimum client's name, birth date, age, and address;

(b) Client's informed consent for care, service, treatment and receipt of the client bill of rights;

(c) Signed and authenticated notes describing the newborn and maternal status during prenatal, labor, birth, and recovery including, but not limited to:

(i) Documentation that verifies the client's low-risk maternal client status; and

(ii) Labor summary;

(iii) Newborn status including Apgar scores, maternal newborn interaction; and

(iv) Physical assessment of the mother and newborn during recovery;

(d) Documentation that a newborn screening specimen was collected (or signed refusal on the back of the specimen form) and submitted to the department's newborn screening program under WAC 246-650-020;

(e) Documentation and authentication of orders by clinical staff and birth center personnel who administer drugs and treatments or make observations and assessments;

(f) Laboratory and diagnostic testing results;

(g) Consultation reports;

(h) Referral, transfer of care, emergency transfer and transport documentation;

(i) Prophylactic treatment of the eyes of the newborn in accordance with WAC 246-100-206 (6)(b);

(j) Prenatal screening under chapters 70.54 RCW and 246-680 WAC, including client's refusal;

(k) Documentation of refusal of rapid HIV testing if documentation of an HIV test during prenatal care is not available;

(l) For HIV positive women, the antiretroviral medications during delivery and recommended lab tests;

(m) Intrapartum antibiotics for Group B Strep positive women per the CDC protocol;

(n) For Hepatitis B positive women, HBIG and Hepatitis B immunization for newborn;

(o) Refusal of any recommended test or treatment;

(p) Documentation of birth registration per chapter 70.58 RCW.

(3) For clients managed by a contractor in a birth center, the licensee shall ensure that each client record is maintained by the birth center and must contain the information as stated in subsection (2)(a) through (p) of this section. Services provided by the contractor, prior to the client's admission to the birth center, shall be summarized or placed in the record in their entirety.

(4) Entries in the client record shall be typewritten, retrievable by electronic means or written legibly in ink.

(5) Documentation and record keeping shall include:

(a) Completion of a birth certificate and, if applicable, a sentinel birth defect report under chapters 70.58 RCW and 246-491 WAC.

(b) Documentation of orders for medical treatment and/or medication. Each order shall be specific to the client and shall be authenticated, at the time the order is received, by an appropriate health care professional authorized to approve the order or medication.

(6) The licensee shall:

(a) Assure client records are kept confidential;

(b) Fasten client records together;

(c) Consider client records property of the birth center; and

(d) Provide a client access to their client record under the licensee's policy and procedure and applicable rules.

(7) When a client is transferred or discharged to another provider or facility, the birth center must provide a summary of care to the provider or facility to whom the client is transferred or discharged.

(8) The licensee shall maintain records for:

(a) Adults - three years following the date of termination of services; and

(b) Minors - three years after attaining age eighteen, or five years following discharge, whichever is longer.

(9) The licensee shall:

(a) Store records to prevent loss of information and to maintain the integrity of the record and protect against unauthorized use;

(b) Maintain or release records after a patient's or client's death according to chapter 70.02 RCW, Medical records—Health care information access and disclosure; and

(c) After ceasing operation, retain or dispose of records in a confidential manner according to the time frames in this subsection.

[Statutory Authority: Chapter 18.46 RCW and RCW 43.70.040. 07-07-075, § 246-329-140, filed 3/16/07, effective 4/16/07.]

WAC 246-329-150 Pharmaceuticals. The purpose of this section is to assure that client pharmaceutical needs are met in a planned and organized manner.

(1) The licensee shall maintain written prescriptions or orders signed by a practitioner legally authorized to prescribe for all drugs administered to clients within the birth center.

(2) The licensee shall have written policies and procedures addressing the receiving, transcribing, and implementing of orders for administration of drugs.

(3) The licensee shall establish and implement written policies to address the type and intended use of any drug or device to be used by patients within the facility.

(4) The licensee shall assure that only local anesthetics are used.

(5) The licensee shall ensure:

(a) Drugs are only administered by personnel or clinical staff licensed to administer drugs;

(b) Drugs kept anywhere in the center are clearly labeled with drug name, strength, and expiration date;

(c) Expired drugs are removed from the storage units and destroyed properly;

(d) Drugs are stored and secured in specifically designated cabinets, closets, drawers, or storerooms and made accessible only to authorized persons;

(e) Drugs for external use must be stored apart from drugs for internal use;

(f) Poisonous or caustic medications and materials including housekeeping and personal grooming supplies must show proper warning or poison labels and must be stored safely and separately from other medications and food supplies;

(g) Drugs requiring refrigeration must be kept in a separate refrigeration unit according to manufacturer's directions;

(h) Schedule II-IV controlled substances are:

(i) Kept in a separate locked storage unit; and

(ii) If heat sensitive, kept in a locked refrigeration unit;

(i) Schedule II-IV controlled substances no longer needed by the patient must be disposed of in compliance with chapter 246-865 WAC.

(6) If emergency drugs and intravenous fluids are maintained in the facility, these are considered an extension of the drug supply owned by the legally authorized prescribing practitioner; these drugs remain the responsibility of the legally authorized prescribing practitioner.

[Statutory Authority: Chapter 18.46 RCW and RCW 43.70.040. 07-07-075, § 246-329-150, filed 3/16/07, effective 4/16/07.]

WAC 246-329-160 Birth center—Physical environment. The purpose of this section is to reduce and control environmental hazards and risks, prevent accidents and injuries, and maintain safe conditions and equipment for clients, visitors, and staff.

(1) The licensee shall provide and maintain a safe and clean environment. The licensee shall maintain the facility consistent with this chapter. Birthing centers built before the adoption of this chapter shall be maintained to the standards that were in place at the time the facility was licensed. If the licensee modifies or alters the facility, the altered areas must meet and be maintained consistent with this chapter and in accordance with the approved plans.

(2) The licensee shall provide at least one birthing room that is a minimum of three hundred square feet and has a minimum dimension of fifteen feet. The room shall be adequate and appropriate to provide for the equipment, staff, supplies, and emergency procedures required for the physical and emotional care of a maternal client, her support person or persons, and the newborn during birth, labor, and the recovery period.

(a) Additional birthing rooms shall have a gross floor space of one hundred fifty-six square feet or fourteen and one-half square meters and a minimum room dimension of eleven feet.

(b) The licensee shall locate birthing rooms to provide unimpeded, rapid access to an exit of the building which will accommodate emergency transportation vehicles.

(3) The licensee shall provide at least five square feet of fixed or portable work surface areas for use in the birthing room or rooms.

(4) The licensee shall provide and maintain toilet and bathing facilities.

(a) Toilet and lavatory shall be located in the vicinity of the birthing room or rooms.

(b) A bathing facility must be available for client use.

(c) The licensee shall keep clean and in good repair all floor surfaces, wall surfaces, water closets, lavatories, tubs, and showers.

(5) The licensee shall provide a space suitable for hanging full length garments and secure storage of clients' personal belongings and valuables.

(6) The licensee shall provide visual privacy for each maternal client and her support person or persons.

(7) The licensee shall assure hallways and doors providing access and entry into the birth center and birthing room or rooms are adequate width and conformation to accommodate maneuvering of ambulance stretchers and wheelchairs.

(8) Water supply. The licensee shall assure an adequate supply of hot and cold running water under pressure consis-

tent with chapter 246-290 WAC, regarding public water supplies. The licensee shall provide and maintain equipment required to deliver hot water at point of use as follows:

(a) 120°F or less for handwash sinks and bathing fixtures;

(b) 160°F or more for laundry washers;

(c) 120°F or more for laundry washers using chemical sanitation;

(d) 120°F or more for mechanical dishwashers using chemical sanitation;

(e) 140°F or more for mechanical dishwashers using high temperature sanitation; and

(f) 180°F or more for sanitation cycle in high temperature mechanical dishwashers.

(9) The licensee shall provide heating and ventilation that:

(a) Provides a safe and adequate source of heat capable of maintaining a room temperature of at least 72°F.

(b) Provides ventilation sufficient to remove odors, excessive heat, and condensation.

(10) The licensee shall provide and maintain lighting and power and shall provide and maintain:

(a) Emergency lighting;

(b) General lighting and adequate examination lighting devices with shatterproof bulbs or protective shields, in the birthing room;

(c) Tamperproof electrical receptacles in birthing rooms, toilets, bathing facilities and family rooms and waiting areas; and

(d) Ground fault circuit interrupter (GFCI) receptacle when located within five feet of water source and above counters that contain sinks.

(11) The licensee shall assure linen and laundry service, and shall provide:

(a) Soiled linen/laundry storage and sorting areas physically separated from clean linen storage and handling areas, kitchen and eating facilities;

(b) Laundry services and shall include a commercial laundry service or the following equipment:

(i) Washing machine(s) providing hot water at a temperature of 160°F or 120°F for laundry washers using chemical sanitation;

(ii) Floor drains as required for equipment;

(iii) Dryer(s);

(iv) Dryer exhaust to the exterior; and

(v) A handwash sink.

(12) The licensee shall provide utility, housekeeping, garbage, and waste services and:

(a) Provide and maintain utility and storage facilities designed and equipped for washing, disinfecting, storing, and other handling of equipment and medical supplies in a manner which ensures physical segregation of clean and sterile supplies and equipment from those that are soiled and/or contaminated; and

(b) Assure all sewage, garbage, refuse, biomedical waste, human tissue, needles and sharps and liquid waste are collected and disposed of in a manner to prevent the creation of an unsafe or unsanitary condition.

(13) Medical gases. If oxygen is stored or used on the premises, the licensee shall, in addition to meeting other codes and regulations:

(a) Assure electrical equipment used in oxygen-enriched environments is designed for use with oxygen and is labeled for use with oxygen; and

(b) Post "no smoking" signs where oxygen is being administered.

(14) Food storage and/or preparation. The licensee shall not provide food preparation and service except when the birth center policy allows the preparation or storage of personal food brought in by the client or families of clients for consumption by that family. In this case, the licensee shall provide an electric or gas refrigerator capable of maintaining a temperature of 45°F or lower and if furnishing reusable utensils and dishes for client use, provide dishwashing facilities assuring hot water at a temperature of not less than 140°F or 120°F or more for mechanical dishwashers using chemical sanitation.

(15) The applicant may, as an alternate method for the design of new construction, use the 2006 edition of the *Guidelines for Design and Construction of Health Care Facilities* for the physical environment standards.

[Statutory Authority: Chapter 18.46 RCW and RCW 43.70.040. 07-07-075, § 246-329-160, filed 3/16/07, effective 4/16/07.]

WAC 246-329-170 Emergency preparedness. The purpose of this section is to establish and implement a disaster plan designed to meet both internal and external disasters.

Each applicant or licensee shall:

(1) Develop and implement written policies and procedures governing emergency preparedness and fire protection;

(2) Develop an acceptable written plan, periodically rehearsed with personnel, contractors, and volunteers, to be followed in the event of an internal or external emergency, and for the care of casualties of the patient and family, personnel, contractors and volunteers arising from such emergencies; and

(3) Develop a fire protection plan to include:

(a) Instruction for all personnel, contractors or volunteers in use of alarms, fire fighting equipment, methods of fire containment, evacuation routes and procedures for calling the fire department and the assignment of specific tasks to all personnel, contractors and volunteers in response to an alarm; and

(b) Semiannual evacuation and fire drills for each shift of personnel.

[Statutory Authority: Chapter 18.46 RCW and RCW 43.70.040. 07-07-075, § 246-329-170, filed 3/16/07, effective 4/16/07.]

WAC 246-329-180 Quality improvement. The purpose of this section is to ensure that performance improvement activities of clinical staff result in continuous improvement of client health outcomes.

Each childbirth center licensee must maintain a quality improvement program to assure the quality of care and services provided that includes, at a minimum:

(1) A complaint process that includes a procedure for the receipt, investigation, and disposition of complaints regarding services;

(2) A method to identify, monitor and evaluate:

(a) Services; and

(b) Referral, transfer, consultation, and transport experience and plans; and

(c) Complications of pregnancy, labor and postpartum; and

(d) Other aspects of services which affect quality care.

(3) A method to identify, evaluate, monitor and correct problems identified by clients, families, clinical staff, volunteers, students or consultants.

(4) A method to identify, evaluate, monitor and correct problems associated with events reported to the department in WAC 246-329-045 (3)(a) through (l) and (4)(a) and (b) as required by chapter 70.56 RCW.

(5) A method to monitor, evaluate and modify as needed corrective actions taken.

(6) A system to assess client satisfaction.

[Statutory Authority: Chapter 18.46 RCW and RCW 43.70.040. 07-07-075, § 246-329-180, filed 3/16/07, effective 4/16/07.]

WAC 246-329-990 Fees. The purpose of the fees section is to describe the fees associated with licensing, renewal and other charges assessed by the department.

(1) Childbirth centers licensed under chapter 18.46 RCW shall submit an annual fee of seven hundred thirteen dollars and zero cents to the department unless a center is a charitable, nonprofit, or government-operated institution under RCW 18.46.030.

(2) A change of ownership fee of one hundred seventy-eight dollars. A new license will be issued and valid for the remainder of the current license period.

(3) The department may charge and collect from a licensee a fee of eight hundred ninety-two dollars for:

(a) A second on-site visit resulting from failure of the licensee to adequately respond to a statement of deficiencies;

(b) A complete on-site survey resulting from a substantiated complaint; or

(c) A follow-up compliance survey.

(4) A licensee shall submit an additional late fee in the amount of twenty-nine dollars per day, not to exceed five hundred ninety-five dollars, from the renewal date (which is thirty days before the current license expiration date) until the date of mailing the fee, as evidenced by the postmark.

(5) Refunds. The department shall refund fees paid by the applicant for initial licensure as follows:

(a) If an application has been received but no on-site survey or technical assistance has been performed by the department, two-thirds of the fees paid, less a fifty dollar processing fee; or

(b) If an application has been received and an on-site survey or technical assistance has been performed by the department, one-third of the fees paid, less a fifty dollar processing fee.

(c) The department may not refund applicant fees if:

(i) The department has performed more than one on-site visit for any purpose;

(ii) One year has elapsed since an initial licensure application is received by the department, but no license is issued because applicant failed to complete requirements for licensure; or

(iii) The amount to be refunded as calculated by (a) or (b) of this subsection is ten dollars or less.

[Statutory Authority: RCW 43.70.250, 70.38.105, 18.46.030, 70.127.090, 43.70.040. 08-12-036, § 246-329-990, filed 5/30/08, effective 7/1/08. Statutory Authority: Chapter 18.46 RCW and RCW 43.70.040. 07-07-075, § 246-329-990, filed 3/16/07, effective 4/16/07. Statutory Authority: RCW 43.70.-250. 06-21-108, § 246-329-990, filed 10/17/06, effective 11/17/06; 05-13-189, § 246-329-990, filed 6/22/05, effective 7/23/05. Statutory Authority: RCW 43.70.250, 18.46.030, 43.70.110, 71.12.470. 04-19-141, § 246-329-990, filed 9/22/04, effective 10/23/04. Statutory Authority: RCW 43.70.250 and 70.38.105(5). 03-22-020, § 246-329-990, filed 10/27/03, effective 11/27/03. Statutory Authority: RCW 43.70.250. 02-13-061, § 246-329-990, filed 6/14/02, effective 7/15/02. Statutory Authority: RCW 18.46.030, 43.70.110 and 43.70.250. 01-15-090, § 246-329-990, filed 7/18/01, effective 8/18/01. Statutory Authority: RCW 43.70.040. 91-02-050 (Order 122), § 246-329-990, filed 12/27/90, effective 1/31/91.]

Chapter 246-335 WAC

IN-HOME SERVICES AGENCIES

(Formerly chapters 246-327, 246-331 and 246-336 WAC)

WAC

PART 1
REQUIREMENTS FOR IN-HOME SERVICES AGENCIES LICENSED TO PROVIDE HOME HEALTH, HOME CARE, HOSPICE, AND HOSPICE CARE CENTER SERVICES

246-335-001 Scope and purpose.
246-335-010 Applicability.
246-335-015 Definitions.
246-335-020 License required.
246-335-025 Initial application.
246-335-030 Renewal.
246-335-035 Change of ownership.
246-335-040 Applicant or licensee rights and responsibilities.
246-335-045 Department responsibilities.
246-335-050 Deemed status.
246-335-055 Plan of operation.
246-335-060 Delivery of services.
246-335-065 Personnel, contractor, and volunteer policies.
246-335-070 Personnel, contractor and volunteer records.
246-335-075 Bill of rights.
246-335-080 Home health plan of care.
246-335-085 Hospice plan of care.
246-335-090 Home care plan of care.
246-335-095 Supervision of home health care.
246-335-100 Supervision of hospice care.
246-335-105 Supervision of home care.
246-335-110 Patient/client records.
246-335-115 Quality improvement.
246-335-120 Home medical supplies and equipment.
246-335-125 Exemptions and alternative methods.

PART 2
REQUIREMENTS SPECIFIC TO HOSPICE CARE CENTERS

246-335-130 Applicability.
246-335-135 Definitions.
246-335-140 License required.
246-335-145 Initial application.
246-335-150 Renewal.
246-335-155 Other general hospice care center licensing requirements.
246-335-160 Nutritional services.
246-335-165 Infection control.
246-335-170 Emergency preparedness.
246-335-175 Pharmaceutical services.

PHYSICAL ENVIRONMENT REQUIREMENTS SPECIFIC TO HOSPICE CARE CENTERS

246-335-180 Applicability.
246-335-185 Application and approval.
246-335-190 Construction and design codes.
246-335-195 Construction documents.
246-335-200 Site and site development.

GENERAL HOSPICE CARE CENTER DESIGN REQUIREMENTS

246-335-205 General requirements.

246-335-210 Furnishings.
246-335-220 Pharmaceutical services area.
246-335-225 Food preparation.
246-335-230 Linen handling facilities.
246-335-235 Laundry facilities.
246-335-240 Utility rooms.

PHYSICAL ENVIRONMENT—SPECIFIC DESIGN REQUIREMENTS

246-335-245 Plumbing.
246-335-250 Medical gases.
246-335-255 Heating, ventilating and air conditioning.
246-335-260 Electrical service and distribution.

PATIENT AREAS

246-335-265 Patient rooms.
246-335-270 Patient toilets and bathing facilities.

FAMILY, PERSONNEL, VOLUNTEER, CONTRACTOR AND PUBLIC AREAS

246-335-275 Family, personnel, volunteer, contractor, and public areas.

FACILITY SUPPORT

246-335-280 Environmental services facilities.
246-335-285 Maintenance facilities.
246-335-290 Receiving, storage and distribution facilities.

EXEMPTIONS AND ALTERNATIVE METHODS

246-335-295 Exemptions and alternative methods.

PART 3
FEES

246-335-990 Fees.

PART 1
REQUIREMENTS FOR IN-HOME SERVICES AGENCIES LICENSED TO PROVIDE HOME HEALTH, HOME CARE, HOSPICE, AND HOSPICE CARE CENTER SERVICES

WAC 246-335-001 Scope and purpose. (1) These rules implement chapter 70.127 RCW which requires the department of health to set minimum health and safety standards for in-home services agencies licensed to provide home health, home care, hospice, and hospice care center services.

(2) Applicants and licensees must meet the requirements of this chapter and other applicable state and local laws.

(3) This chapter does not apply to services provided by persons exempt from requirements of chapter 70.127 RCW as provided for in RCW 70.127.040 and 70.127.050.

[Statutory Authority: Chapter 70.127 RCW. 02-18-026, § 246-335-001, filed 8/23/02, effective 10/1/02.]

WAC 246-335-010 Applicability. The requirements in Part 1 of this chapter apply to all in-home services agencies licensed to provide home health, home care, and hospice services unless otherwise noted in the specific sections. The requirements in Part 1 of this chapter also apply to hospice care centers as identified in Part 2. The fee requirements in Part 3 of this chapter apply to all in-home services agencies licensed to provide home health, home care, hospice and hospice care center services.

[Statutory Authority: Chapter 70.127 RCW. 02-18-026, § 246-335-010, filed 8/23/02, effective 10/1/02.]

WAC 246-335-015 Definitions. For the purposes of this chapter, the following words and phrases will have the following meanings unless the context clearly indicates otherwise:

(1) "AAA" means the area agency on aging designated by the aging and adult services administration to contract for home care services with the department of social and health services.

(2) "Acute care" means care provided by an in-home services agency licensed to provide home health services for patients who are not medically stable or have not attained a satisfactory level of rehabilitation. These patients require frequent monitoring by a licensed nurse, therapist, dietician, or social worker to assess health status and progress.

(3) "Administrator" means an individual responsible for managing the operation of an in-home services agency.

(4) "Agency" means an in-home services agency licensed to provide home health, home care, hospice or hospice care center services.

(5) "Assessment" means:

(a) For home health and hospice agencies and hospice care centers, an evaluation of patient needs by an appropriate health care professional; or

(b) For home care agencies, an on-site visit by appropriate agency personnel to determine services requested or recommended to meet client needs.

(6) "Authenticated" means a written signature or unique identifier verifying accuracy of information.

(7) "Authorizing practitioner" means an individual authorized to approve a home health, hospice or hospice care center plan of care.

(a) For home health services:

(i) A physician licensed under chapter 18.57 or 18.71 RCW;

(ii) A podiatric physician and surgeon licensed under chapter 18.22 RCW; or

(iii) An advanced registered nurse practitioner (ARNP), as authorized under chapter 18.79 RCW;

(b) For hospice and hospice care center services:

(i) A physician licensed under chapter 18.57 or 18.71 RCW; or

(ii) An advanced registered nurse practitioner (ARNP), as authorized under chapter 18.79 RCW;

(8) "Bereavement" means care provided to the patient's family with the goal of alleviating the emotional and spiritual discomfort associated with the patient's death.

(9) "Client" means an individual receiving home care services.

(10) "Construction" for the purposes of hospice care centers means:

(a) New building(s) to be used as a hospice care center;

(b) Addition(s) to or conversion(s), either in whole or in part, of an existing building or buildings to be used as a hospice care center or a portion thereof; or

(c) Alteration or modification to a hospice care center.

(11) "Contractor" means an individual, person, or licensee who has a written contract with a licensee to provide patient or client care services or equipment.

(12) "Deemed status" means a designation assigned by the department for an in-home services agency licensed to provide home health, home care, or hospice services meeting the provisions of WAC 246-335-050, certified or accredited by organizations recognized by RCW 70.127.085, or monitored under contract with the department of social and health

services under RCW 70.127.085 to provide home care services.

(13) "Department" means the Washington state department of health.

(14) "Dietician" means a person certified under chapter 18.138 RCW or registered by the American Dietetic Association.

(15) "Director of clinical services" means an individual responsible for nursing, therapy, nutritional, social, or related services that support the plan of care provided by in-home services agencies licensed to provide home health, hospice or hospice care center services.

(16) "Document" means the process of recording information relating to patient or client care verified by signature or unique identifier, title, and date.

(17) "Family" means an individual or individuals who are important to, and designated in writing by, the patient or client and need not be relatives, or who are legally authorized to represent the patient or client.

(18) "Health care professional" means an individual who provides health or health-related services within the individual's authorized scope of practice and who is licensed, registered or certified under Title 18 RCW, Business and professions.

(19) "Home care agency" or "in-home services agency licensed to provide home care services" means a person administering or providing home care services directly or through a contract arrangement to clients in places of permanent or temporary residence. A home care agency that provides delegated tasks of nursing under RCW 18.79.260 (3)(e) and rules adopted thereunder is not considered a home health agency for purposes of this chapter.

(20) "Home care aide" means an individual providing home care services.

(21) "Home care services" means nonmedical services and assistance provided to ill, disabled, or vulnerable clients that enables them to remain in their residences. Home care services include, but are not limited to: Personal care such as assistance with dressing, feeding and personal hygiene to facilitate self-care; homemaker assistance with household tasks, such as housekeeping, shopping, meal planning and preparation, and transportation; respite care assistance and support provided to the family; or other nonmedical tasks, as defined in this section or delegated tasks of nursing under RCW 18.79.260 (3)(e) and rules adopted thereunder.

(22) "Home health agency" or "in-home services agency licensed to provide home health services" means a person administering or providing two or more home health services directly or through a contract arrangement to patients in places of permanent or temporary residence. A person administering or providing only nursing services may elect to be an in-home services agency licensed to provide home health services.

(23) "Home health aide" means an individual registered or certified as a nursing assistant under chapter 18.88A RCW.

(24) "Home health aide services" means services provided by home health aides in an in-home services agency licensed to provide home health, hospice, or hospice care center services under the supervision of a registered nurse, physical therapist, occupational therapist, or speech therapist. Such care may include ambulation and exercise, medication assistance level 1 and level 2, reporting changes in patients' conditions and needs, completing appropriate records, and personal care or homemaker services, and other nonmedical tasks, as defined in this section.

(25) "Home health services" means services provided to ill, disabled, or vulnerable patients. These services include, but are not limited to, nursing services, home health aide services, physical therapy services, occupational therapy services, speech therapy services, respiratory therapy services, nutritional services, medical social services, home medical supplies or equipment services, and professional medical equipment assessment services.

(26) "Home medical supplies or equipment services" means providing diagnostic, treatment, and monitoring equipment and supplies used in the direct care of patients or clients as stated in a plan of care.

(27) "Homelike" for the purposes of a hospice care center means an environment having the qualities of a home, including privacy, comfortable surroundings, opportunities for patient self-expression, and supporting interaction with the family, friends, and community.

(28) "Hospice agency" or "in-home services agency licensed to provide hospice services" means a person administering or providing hospice services directly or through a contract arrangement to patients in places of permanent or temporary residence under the direction of an interdisciplinary team.

(29) "Hospice care center" or "in-home services agency licensed to provide hospice care center services" means a homelike, noninstitutional facility where hospice services are provided, and that meet the requirements for operation under RCW 70.127.280 and applicable rules.

(30) "Hospice care center service category" means the different levels of care provided in a hospice care center, including continuous care, general inpatient care, inpatient respite care, and routine home care.

(a) "Continuous care" means care for patients requiring a minimum of eight hours of one-to-one services in a calendar day, with assessment and supervision by an RN. An RN, LPN or home health aide may provide the care or treatment, according to practice acts and the rules adopted thereunder, of acute or chronic symptoms, including a crisis in their caregiving.

(b) "General inpatient care" means care for patients requiring an RN on-site twenty-four hours a day, for assessment and supervision. An RN, LPN or home health aide may provide the care or treatment, according to practice acts and the rules adopted thereunder, of acute or chronic symptoms, including a crisis in their caregiving.

(c) "Inpatient respite care" means care for patients whose caregivers require short-term relief of their caregiving duties.

(d) "Routine home care" means the core level of service for patients not receiving continuous care, general inpatient care, or inpatient respite care.

(31) "Hospice care center services" means hospice services provided in a hospice care center and may include any of the levels of care defined as hospice care center service categories.

(32) "Hospice services" means symptom and pain management provided to a terminally ill patient, and emotional,

spiritual and bereavement support for the patient and family in a place of temporary or permanent residence, including hospice care centers, and may include the provision of home health and home care services for the terminally ill patient through an in-home services agency licensed to provide hospice or hospice care center services.

(33) "In-home services agency" or "in-home services licensee" means a person licensed to administer or provide home health, home care, hospice or hospice care center services directly or through a contract arrangement to patients or clients in a place of temporary or permanent residence.

(34) "In-home services category" means home health, home care, hospice, or hospice care center services.

(35) "Interdisciplinary team" means the group of individuals involved in patient care providing hospice services or hospice care center services including, at a minimum, a physician, registered nurse, social worker, spiritual counselor and volunteer.

(36) "Licensed practical nurse" or "LPN" means an individual licensed as a practical nurse under chapter 18.79 RCW.

(37) "Licensed nurse" means a licensed practical nurse or registered nurse.

(38) "Licensee" means the person to whom the department issues the in-home services license.

(39) "Maintenance care" means care provided by in-home services agencies licensed to provide home health services that are necessary to support an existing level of health, to preserve a patient from further failure or decline, or to manage expected deterioration of disease. These patients require periodic monitoring by a licensed nurse, therapist, dietician, or social worker to assess health status and progress.

(40) "Managed care plan" means a plan controlled by the terms of the reimbursement source.

(41) "Medical director" means a physician licensed under chapter 18.57 or 18.71 RCW responsible for the medical component of patient care provided in an in-home services agency licensed to provide hospice and hospice care center services according to WAC 246-335-055 (4)(a).

(42) "Medication assistance level 1" means home health aide assistance with medications, that includes the application, instillation or insertion of medications under a plan of care, for patients of an in-home services agency licensed to provide home health, hospice or hospice care center services and are under the direction of appropriate agency health care personnel. The assistance must be provided in accordance with the Nurse Practice Act as defined in chapter 18.79 RCW and rules adopted thereunder and the nursing assistant scope of practice as defined in chapter 18.88A RCW and the rules adopted thereunder.

(43) "Medication assistance level 2" means assistance with medications as defined by the board of pharmacy in chapter 246-888 WAC.

(44) "Nonmedical tasks" means those tasks which do not require clinical judgment and which can be performed by unlicensed individuals. These tasks are ordinarily performed by the patient or client, which if not for the patient or client's cognitive or physical limitation(s), would be completed independently by the patient, client, or family. These tasks may be completed by home health aides or home care aides. These nonmedical tasks include, but are not limited to:

(a) "Ambulation" which means assisting the patient or client to move around. Ambulation includes supervising or guiding the patient or client when walking alone or with the help of a mechanical device such as a walker, assisting with difficult parts of walking such as climbing stairs, supervising or guiding the patient or client if the patient or client is able to propel a wheelchair, pushing of the wheelchair, and providing constant or standby physical assistance to the patient or client if totally unable to walk alone or with a mechanical device.

(b) "Bathing" which means assisting the patient or client to wash. Bathing includes supervising or guiding the patient or client to bathe, assisting the patient or client with difficult tasks such as getting in or out of the tub or washing the back, and completely bathing the patient or client if totally unable to wash self.

(c) "Body care" which means skin care including the application of over the counter ointments or lotions. "Body care" excludes foot care for patients or clients who are diabetic or have poor circulation.

(d) "Feeding" which means assistance with eating. Feeding includes supervising or guiding the patient or client when able to feed self, assisting with difficult tasks such as cutting food or buttering bread, and orally feeding the patient or client when unable to feed self.

(e) "Medication assistance level 2" which means assistance with medications as defined in the board of pharmacy rules, chapter 246-888 WAC, and consistent with nursing assistant rules under chapter 18.88A RCW.

(f) "Positioning" which means assisting the patient or client to assume a desired position, and with turning and exercises to prevent complications, such as contractures and pressure sores. Range of motion ordered as part of a physical therapy treatment is not included, unless such activity is authorized in agency policies and procedures and is supervised by a licensed physical therapist in a home health or hospice agency or hospice care center.

(g) "Protective supervision" which means being available to provide safety guidance protection to the patient or client who cannot be left alone due to impaired judgment.

(h) "Toileting" which means helping the patient or client to and from the bathroom, assisting with bedpan routines, using incontinent briefs, cleaning the patient or client after elimination, and assisting the patient or client on and off the toilet.

(i) "Transfer" which means assistance with getting in and out of a bed or wheelchair or on and off the toilet or in and out of the bathtub. Transfer includes supervising or guiding the patient or client when able to transfer, providing steadying, and helping the patient or client when the patient or client assists in own transfer. This does not include transfers when the patient or client is unable to assist in their own transfer or needs assistive devices unless specific training or skills verification has occurred consistent with agency policies and procedures.

(45) "One-time visit" means a single visit by one individual to provide home health, hospice or home care services with no predictable need for continuing visits, not to exceed twenty-four hours.

(46) "On-site" means the location where services are provided.

(47) "Patient" means an individual receiving home health, hospice, or hospice care center services.

(48) "Person" means any individual, business, firm, partnership, corporation, company, association, joint stock association, public or private organization, or the legal successor thereof that employs or contracts with two or more individuals.

(49) "Personnel" means individuals employed and compensated by the licensee.

(50) "Plan of care" means a written document based on assessment of patient or client needs that identifies services to meet these needs.

(51) "Pressure relationships" of air to adjacent areas means:

(a) Positive (P) pressure is present in a room when the:

(i) Room sustains a minimum of 0.001 inches of H2O pressure differential with the adjacent area, the room doors are closed, and air is flowing out of the room; or

(ii) Sum of the air flow at the supply air outlets (in CFM) exceeds the sum of the air flow at the exhaust/return air outlets by at least 70 CFM with the room doors and windows closed;

(b) Negative (N) pressure is present in a room when the:

(i) Room sustains a minimum of 0.001 inches of H2O pressure differential with the adjacent area, the room doors are closed, and air is flowing into the room; or

(ii) Sum of the air flow at the exhaust/return air outlets (in CFM) exceeds the sum of the air flow at the supply air outlets by at least 70 CFM with the room doors and windows closed;

(c) Equal (E) pressure is present in a room when the:

(i) Room sustains a pressure differential range of plus or minus 0.0002 inches of H2O with the adjacent area, and the room doors are closed; or

(ii) Sum of the air flow at the supply air outlets (in CFM) is within ten percent of the sum of the air flow at the exhaust/return air outlets with the room doors and windows closed.

(52) "Professional medical equipment assessment services" means periodic care provided by a licensed nurse, therapist or dietician, within their scope of practice, for patients who are medically stable, for the purpose of assessing the patient's medical response to prescribed professional medical equipment, including, but not limited to, measurement of vital signs, oximetry testing, and assessment of breath sounds and lung function (spirometry).

(53) "Quality improvement" means reviewing and evaluating appropriateness and effectiveness of services provided under this chapter.

(54) "Registered nurse" or "RN" means an individual licensed under chapter 18.79 RCW.

(55) "Service area" means the geographic area in which the department has given approval to a licensee to provide in-home services based on criteria in WAC 246-335-055 (1)(a)(vi). Service areas do not apply to hospice care centers.

(56) "Sink" means one of the following:

(a) "Clinic service sink (siphon jet)" means a plumbing fixture of adequate size and proper design for waste disposal with siphon jet or similar action sufficient to flush solid matter of at least two and one-eighth inch diameter.

(b) "Service sink" means a plumbing fixture of adequate size and proper design for filling and emptying mop buckets.

(c) "Handwash sink" means a plumbing fixture of adequate size and proper design to minimize splash and splatter and permit handwashing without touching fixtures with hands, with adjacent soap dispenser with foot control or equivalent and single service hand drying device.

(57) "Social worker" means an individual regulated under chapter 18.19 or 18.225 RCW.

(58) "Spiritual counseling" means services provided or coordinated by an individual with knowledge of theology, pastoral counseling or an allied field.

(59) "Statement of deficiencies" means a written notice of any violation of chapter 70.127 RCW or the rules adopted thereunder which describes the reasons for noncompliance.

(60) "Statement of charges" means a document which initiates enforcement action against a licensee or applicant and which creates the right to an adjudicative proceeding. The department shall prepare a statement of charges in accordance with WAC 246-10-201.

(61) "Supervisor of direct care services" means an individual responsible for services that support the plan of care provided by an in-home services agency licensed to provide home care services.

(62) "Survey" means an inspection or investigation, announced or unannounced, conducted by the department to evaluate and monitor a licensee's compliance with this chapter.

(63) "Therapist" means an individual who is:

(a) A physical therapist, licensed under chapter 18.74 RCW;

(b) A respiratory therapist, licensed under chapter 18.89 RCW;

(c) An occupational therapist, licensed under chapter 18.59 RCW; or

(d) A speech therapist licensed under chapter 18.35 RCW.

(64) "Therapy assistant" means a licensed occupational therapy assistant defined under chapter 18.59 RCW or physical therapist assistant defined under chapter 18.74 RCW.

(65) "Volunteer" means an individual who provides direct care to a patient or client and who:

(a) Is not compensated by the in-home services licensee; and

(b) May be reimbursed for personal mileage incurred to deliver services.

(66) "WISHA" means the Washington Industrial Safety and Health Act, chapter 49.17 RCW.

[Statutory Authority: Chapter 70.127 RCW. 04-01-197, § 246-335-015, filed 12/24/03, effective 1/24/04; 02-18-026, § 246-335-015, filed 8/23/02, effective 10/1/02.]

WAC 246-335-020 License required. A person must possess a current license issued by the department before advertising, operating, managing, conducting, opening or maintaining an in-home services agency unless exempt under RCW 70.127.040 or 70.127.050.

[Statutory Authority: Chapter 70.127 RCW. 02-18-026, § 246-335-020, filed 8/23/02, effective 10/1/02.]

WAC 246-335-025 Initial application. An applicant for initial licensure or additional in-home service category must:

(1) Submit to the department:

(a) A completed application on forms provided by the department;

(b) Evidence of current professional liability insurance in the amount of one hundred thousand dollars per occurrence and public liability and property damage insurance in the amount of two hundred thousand dollars per occurrence as a minimum. This subsection does not apply to hospice applicants that provide in-home hospice care without receiving compensation for delivery of services;

(c) Disclosure statements and criminal history background checks obtained within three months of the application date for the administrator and director of clinical services or supervisor of direct care services in accordance with RCW 43.43.830 through 43.43.845;

(d) The following information:

(i) Name of managing personnel, officers, administrator, director of clinical services or supervisor of direct care services, and partners or individuals owning ten percent or more of the applicant's assets;

(ii) A description of the organizational structure;

(iii) A description of the in-home services categories to be offered directly or under contract;

(iv) Name, address, and phone numbers of all office locations that provide services within the state;

(v) A copy of the current business license(s);

(vi) A description of the service area for which the applicant is requesting to provide services;

(vii) Other information as required by the department;

(viii) Fees specified in WAC 246-335-990; and

(2) Develop and approve policies and procedures addressing the content of this chapter; and

(3) Meet the requirements of this chapter as determined by an initial survey conducted by the department.

[Statutory Authority: Chapter 70.127 RCW. 02-18-026, § 246-335-025, filed 8/23/02, effective 10/1/02.]

WAC 246-335-030 Renewal. At least thirty days before the expiration date of the current license, the licensee must submit the following to the department:

(1) A completed application on forms provided by the department;

(2) Evidence of continuing insurance coverage according to WAC 246-335-025 (1)(b);

(3) Disclosure statements and criminal history background checks obtained within three months of the renewal date for the administrator and director of clinical services or supervisor of direct care services when these individuals are new to the agency since initial licensure or the last renewal, in accordance with RCW 43.43.830 through 43.43.845;

(4) Documentation required under WAC 246-335-050, if initially applying or reapplying for deemed status;

(5) A written request for continuation of deemed status, when applicable, including:

(a) The most recent decisions and findings; and

(b) Any changes in accreditation status, from the accrediting organization; and

(6) Information listed in WAC 246-335-025 (1)(d).

[Statutory Authority: Chapter 70.127 RCW. 02-18-026, § 246-335-030, filed 8/23/02, effective 10/1/02.]

WAC 246-335-035 Change of ownership. At least thirty days prior to changing ownership of an in-home services agency:

(1) The licensee must submit in writing to the department:

(a) The full name, address and phone number of the current and prospective owner;

(b) The name, address, and phone number of the currently licensed in-home services agency and the name under which the prospective agency will operate;

(c) Date of the proposed change of ownership; and

(d) Any change in office location and service area, if relevant;

(2) The prospective new owner must submit:

(a) Information listed in WAC 246-335-025 (1)(b) through (d); and

(b) The change of ownership fee specified in WAC 246-335-990.

[Statutory Authority: Chapter 70.127 RCW. 02-18-026, § 246-335-035, filed 8/23/02, effective 10/1/02.]

WAC 246-335-040 Applicant or licensee rights and responsibilities. (1) An applicant or licensee must:

(a) Comply with the provisions of chapter 70.127 RCW and this chapter;

(b) Display the license issued by the department in an area accessible to the public;

(c) Notify the department in writing:

(i) When there are changes of administrator, director of clinical services, or supervisor of direct care services;

(ii) Within thirty days of beginning or ceasing operation of any office location(s);

(iii) Thirty or more days before ceasing operation of any in-home services category licensed by the department;

(iv) To request approval to expand home health, hospice or home care service areas. An agency must submit information based on the criteria in WAC 246-335-055 (1)(a)(vi) and receive approval for service area expansion prior to providing services in the proposed expanded service area;

(v) When decreasing home health, hospice or home care service areas; and

(vi) Within thirty days of receipt, for deemed agencies only, of all decisions and findings from an accrediting entity, including any changes in accreditation or monitored status;

(d) Cooperate with the department during surveys which may include reviewing licensee records and conducting on-site visits with patient or client consent;

(e) Respond to a statement of deficiencies by submitting to the department:

(i) Within ten working days of receipt, a written plan of correction for each deficiency. All corrections must be completed within sixty days after the survey exit date, unless otherwise specified by the department; and

(ii) No longer than ninety days after the survey exit date, a progress report describing corrections made and ongoing monitoring actions, unless otherwise specified by the department.

(2) An applicant or licensee will:

(a) Receive a written statement of deficiencies found during a survey; and

(b) Receive written service area approval or denial;

(3) An applicant or licensee may:

(a) Discuss findings observed during a survey with the surveyor; and

(b) Discuss the statement of deficiencies, denial of service area under WAC 246-335-045 (2)(f), or denial of an exemption under WAC 246-335-125 or 246-335-295 with the department's manager;

(4) An applicant or licensee has the right to respond to and contest a statement of charges according to the following provisions:

(a) RCW 43.70.115, department of health authority for license approval, denial, restriction, conditioning, modification, suspension and revocation;

(b) Chapter 34.05 RCW, the Administrative Procedure Act; and

(c) Chapter 246-10 WAC, Adjudicative proceedings.

[Statutory Authority: Chapter 70.127 RCW. 02-18-026, § 246-335-040, filed 8/23/02, effective 10/1/02.]

WAC 246-335-045 Department responsibilities. (1) The department may, in accordance with chapter 70.127 RCW:

(a) Issue an initial license including the in-home services category(ies) and department approved service area(s), if applicable, for twelve months following submission of a completed application and appropriate fee, and following a survey that documents the applicant meets all the requirements of this chapter;

(b) Issue a renewal license including the in-home services category(ies) and department approved service area(s), if applicable, for a twenty-four month period following submission of a completed application and appropriate fee;

(c) Issue a license for change of ownership including the in-home services category(ies) and department approved service area(s), if applicable, to the new licensee for the remainder of the current license period following submission of the required information and appropriate fee, under WAC 246-335-035.

(2) The department may:

(a) Conduct surveys at any time and at least once during a licensure period to determine compliance with chapter 70.127 RCW and this chapter, except for agencies with deemed status under WAC 246-335-050 (2) and (3);

(b) Conduct one licensing survey inclusive of all in-home services categories;

(c) Investigate any person suspected of:

(i) Advertising, operating, managing, conducting, opening or maintaining an in-home services agency or providing in-home services, including hospice care center services, without a license unless exempt from licensure under RCW 70.127.040 and 70.127.050; or

(ii) Survey a licensee at anytime if the department has reason to believe the licensee is providing unsafe, insufficient, inadequate or inappropriate care;

(d) Investigate allegations of noncompliance with RCW 43.43.830 through 43.43.845, when necessary, in consultation with law enforcement personnel;

(e) Require licensees to complete additional disclosure statements and background inquiries for an individual associated with the licensee or having direct contact with children under sixteen years of age, people with developmental disabilities, or vulnerable adults if the department has reason to believe that offenses specified under RCW 43.43.830 have occurred since completion of the previous disclosure statement and criminal background inquiry;

(f) Approve, deny or revoke requests by home health, hospice or home care agencies for initial service area or service area expansion based on:

(i) The licensee's demonstrated ability or inability to comply with this chapter as illustrated by substantiated complaint history, survey outcomes or enforcement action; and

(ii) Evidence of the licensee's ability or inability to manage and supervise services throughout the approved service area under criteria listed in WAC 246-335-055 (1)(a)(vi);

(g) Approve, deny, restrict, condition, modify, suspend, or revoke a license under this chapter under RCW 70.127.170 and 70.127.180(3);

(h) Issue a statement of deficiencies following a survey which identifies noncompliance with chapter 70.127 RCW and this chapter; and

(i) Prepare and serve upon the licensee or applicant at the earliest practical time a statement of charges following a survey which identifies noncompliance with chapter 70.127 RCW and this chapter. The statement of charges shall be accompanied by a notice that the licensee or applicant may request a hearing to contest the charges.

[Statutory Authority: Chapter 70.127 RCW. 02-18-026, § 246-335-045, filed 8/23/02, effective 10/1/02.]

WAC 246-335-050 Deemed status. (1) A home health or hospice licensee that is certified by the federal medicare program, or accredited by the community health accreditation program, or the joint commission on accreditation of health care organizations is not subject to a state licensure survey when exempt under subsection (3) of this section or the department has granted deemed status under subsection (6) of this section.

(2) An in-home services licensee under contract with and monitored by the department of social and health services or AAA to provide home care services must notify the department when the contract is initiated. The licensee is not required to submit the information noted in subsection (4) of this section and is not subject to a state licensure survey when the department has granted deemed status under subsection (6) of this section.

(3) An agency certified by the federal medicare program is automatically granted deemed status for state licensure survey and is not required to submit the information noted in subsection (4) of this section.

(4) An agency accredited by the community health accreditation program or the joint commission on accreditation of health care organizations requesting deemed status, except as provided in subsection (5) of this section, must submit to the department:

(a) A written request to be considered for deemed status;

(b) Verification of accreditation; and

(c) A copy of the decisions and findings of the accrediting organization based on an on-site survey within the

twenty-four month period preceding the request for deemed status.

(5) A licensee may not request deemed status for an initial license or the survey conducted during the initial licensure period.

(6) The department shall grant deemed status to an in-home services category when:

(a) The department determines, using a liberal interpretation, the survey standards used at the time of certification, accreditation, or monitoring are substantially equivalent to chapter 70.127 RCW; and

(b) The licensee meets the requirements of this chapter and otherwise qualifies for licensure.

(7) If the department determines that the survey standards are not substantially equivalent to those required by this chapter, the department will notify the affected licensees with:

(a) A detailed description of the deficiencies in the alternate survey process; and

(b) An explanation concerning the risk to the consumer.

(8) The department may conduct validation surveys of agencies with deemed status according to RCW 70.127.085.

(9) The department retains authority to:

(a) Survey those in-home services categories not accredited, certified or monitored by the organizations specified in this section; and

(b) Investigate complaints against a deemed agency.

[Statutory Authority: Chapter 70.127 RCW. 02-18-026, § 246-335-050, filed 8/23/02, effective 10/1/02.]

WAC 246-335-055 Plan of operation. (1) The applicant or licensee must establish and implement policies and procedures which include:

(a) A written plan of operation identifying:

(i) A description of the organizational structure;

(ii) Personnel job descriptions;

(iii) Responsibilities of contractors and volunteers;

(iv) Services to be provided;

(v) The days and hours of agency operation; and

(vi) Criteria for management and supervision of services throughout the service area(s) or hospice care center which include:

(A) For home health, hospice or hospice care center applicants or licensees:

(I) How the initial assessment and development of the plan of care will be completed per WAC 246-335-080 and 246-335-085;

(II) How patient needs will be met when assigned personnel, volunteers, or contractors are unable to serve the patient;

(III) How supervision of personnel and volunteers and monitoring of services provided by contractors will occur which meet the requirements of WAC 246-335-095 and 246-335-100;

(IV) How performance evaluations for personnel and volunteers and evaluation of services provided by contractors will be conducted per WAC 246-335-065 (10) and (11); and

(V) How the quality improvement program required in WAC 246-335-115 will be applied throughout the entire service area;

(B) For home care applicants or licensees:

(I) How the initial intake and development of the plan of care will be completed per WAC 246-335-090;

(II) How client needs will be met when assigned personnel, volunteers or contractors are unable to serve the client;

(III) How supervision of personnel and volunteers and monitoring of services provided by contractors will occur which meet the requirements of WAC 246-335-105;

(IV) How performance evaluations for personnel and volunteers and evaluation of services provided by contractors will be conducted per WAC 246-335-065 (10) and (11); and

(V) How the quality improvement program required in WAC 246-335-115 will be applied throughout the entire service area;

(b) A process to inform patients or clients of alternative services prior to ceasing operation or when the licensee is unable to meet the patient's or client's needs;

(c) A plan for preserving records, including the process to preserve or dispose of records prior to ceasing operation; and

(d) Time frames for filing documents in the patient or client records.

(2) The licensee must continue to update policies and procedures to reflect current practice, services provided by the agency, and state and local laws.

(3) The applicant or licensee must identify an administrator who is responsible to:

(a) Oversee the management and fiscal affairs of the licensee;

(b) Implement the provisions of this section;

(c) Designate in writing an alternate to act in the administrator's absence;

(d) Provide management and supervision of services throughout the approved service area or in the hospice care center;

(e) Arrange for necessary services;

(f) Keep contracts current;

(g) Serve as a liaison between the licensee, personnel, contractors and volunteers;

(h) Assure personnel, contractors and volunteers are currently credentialed by the state of Washington, when appropriate, according to applicable practice acts;

(i) Assure personnel, contractors and volunteers comply with the licensee's policies and procedures;

(j) Implement a quality improvement process;

(k) Manage recordkeeping according to this chapter;

(l) Assure supplies and equipment are available and maintained in working order;

(m) Assure the accuracy of public information materials; and

(n) Assure current written policies and procedures are accessible to personnel, contractors and volunteers during hours of operation.

(4) Hospice and hospice care center applicants or licensees must include in the plan of operation:

(a) Responsibilities and availability of the medical director to include:

(i) Advising the licensee on policies and procedures;

(ii) Serving as liaison with a patient's authorizing practitioner;

(iii) Providing patient care and family support;

(iv) Approving modifications in individual plans of care; and

(v) Participating in interdisciplinary team conferences as required by WAC 246-335-085, hospice plan of care and WAC 246-335-155 (9)(a), hospice care center plan of care;

(b) Availability of a bereavement program for up to one year after a patient's death;

(c) Availability of social services, spiritual counseling, volunteer services, and respite care; and

(d) Assuring direct care personnel, contractors and volunteers have training specific to the needs of the terminally ill and their families.

[Statutory Authority: Chapter 70.127 RCW. 02-18-026, § 246-335-055, filed 8/23/02, effective 10/1/02.]

WAC 246-335-060 Delivery of services. The applicant or licensee must establish and implement policies and procedures that describe:

(1) Admission, transfer, discharge and referral processes;

(2) Specific services, including nonmedical tasks, available to meet patient or client, or family needs as identified in plans of care;

(3) Agency personnel, contractor, and volunteer roles and responsibilities related to medication assistance level 1 and level 2;

(4) Coordination of care, including:

(a) Coordination among services being provided by the in-home services agency; and

(b) Coordination with other agencies when care being provided impacts patient or client health;

(5) Actions to address patient or client, or family communication needs;

(6) Infection control practices for direct care personnel, contractors, and volunteers consistent with local health authorities;

(7) Actions to take when personnel, volunteers, contractors, or patients or clients exhibit or report symptoms of a communicable disease in an infectious stage in accordance with chapter 246-100 WAC, Communicable and certain other diseases and chapter 246-101 WAC, Notifiable conditions;

(8) Management of patient or client medications and treatments in accordance with appropriate practice acts;

(9) Food storage, preparation and handling;

(10) Reporting of patient/client abuse and neglect according to chapter 74.34 RCW;

(11) Emergency care of patient or client;

(12) Actions to be taken upon death of a patient or client;

(13) Implementation of advanced directives in accordance with the Natural Death Act; and

(14) Plans for service delivery when natural or man-made emergencies occur that prevent normal agency operation.

(15) Nurse delegation as defined in RCW 18.79.260 (3)(e) and rules adopted thereunder, if applicable.

[Statutory Authority: Chapter 70.127 RCW. 04-01-197, § 246-335-060, filed 12/24/03, effective 1/24/04; 02-18-026, § 246-335-060, filed 8/23/02, effective 10/1/02.]

WAC 246-335-065 Personnel, contractor, and volunteer policies. The applicant or licensee must establish and implement policies and procedures regarding the following:

(1) Employment criteria consistent with chapter 49.60 RCW, Discrimination—Human rights commission;

(2) Job descriptions commensurate with responsibilities and consistent with health care professional credentialing and scope of practice as defined in relevant practice acts and rules adopted thereunder;

(3) References for personnel, contractors and volunteers;

(4) Credentials of health care professionals that are current and in good standing;

(5) In-person contact with personnel, contractors and volunteers prior to service provision;

(6) Orientation to current agency policies and procedures and verification of skills or training specific to the care needs of patients or clients;

(7) Ongoing training pertinent to patient or client care needs;

(8) Current cardiopulmonary resuscitation training consistent with agency policies and procedures for direct care personnel and contractors in home health and hospice agencies, and hospice care centers;

(9) Infection control practices including communicable disease testing, immunization, and vaccination according to current local health authorities and availability of equipment necessary to implement plans of care and infection control policies and procedures;

(10) Annual performance evaluations of all personnel and volunteers providing direct patient or client care, including on-site observation of care and skills specific to the care needs of patients or clients;

(11) Annual evaluations of services provided by contractors providing direct patient or client care; and

(12) Washington state patrol criminal background inquiries and disclosure statements under RCW 43.43.830 through 43.43.845 for the administrator, director of clinical services or supervisor of direct care services per WAC 246-335-025 (1)(c), 246-335-030(3), and 246-335-035 and personnel, contractors, volunteers, students, and any other individual associated with the licensee having direct contact with children under sixteen years of age, people with developmental disabilities or vulnerable adults.

[Statutory Authority: Chapter 70.127 RCW. 02-18-026, § 246-335-065, filed 8/23/02, effective 10/1/02.]

WAC 246-335-070 Personnel, contractor and volunteer records. The applicant or licensee must maintain records on all personnel and volunteers and have access to records on all contractors to include:

(1) Current practice certification, credential or licensure, as applicable;

(2) Documentation of references;

(3) Evidence of orientation to current agency policies and procedures;

(4) Verification of personnel, contractor, and volunteer skills or training specific to meeting the care needs of patients or clients;

(5) Evidence of disclosure statement and Washington state patrol criminal background inquiry according to RCW 43.43.830 through 43.43.845;

(6) Training on current and revised agency policies and procedures, including patient or client care issues;

(7) Current CPR training for direct care personnel and contractors in home health and hospice agencies, and hospice care centers;

(8) Communicable disease testing, immunization, and vaccination according to current local health authorities; and

(9) Documentation of evaluations of personnel and volunteers providing direct patient or client care and evaluations of services provided by contractors providing direct patient or client care as required in WAC 246-335-065 (10) and (11).

[Statutory Authority: Chapter 70.127 RCW. 02-18-026, § 246-335-070, filed 8/23/02, effective 10/1/02.]

WAC 246-335-075 Bill of rights. (1) An in-home services licensee at the time of admission must provide each patient or client, or designated family member with a written bill of rights affirming each individual's right to:

(a) A listing of the services offered by the in-home services licensee and those being provided;

(b) The name of the individual supervising the care and the manner in which that individual may be contacted;

(c) A description of the process for submitting and addressing complaints;

(d) Submit complaints without retaliation and to have the complaint addressed by the licensee;

(e) Be informed of the state complaint hotline number;

(f) A statement advising the patient or client, or designated family member of the right to ongoing participation in the development of the plan of care;

(g) A statement providing that the patient or client, or designated family member is entitled to information regarding access to the department's listing of providers and to select any licensee to provide care, subject to the individual's reimbursement mechanism or other relevant contractual obligations;

(h) Be treated with courtesy, respect, privacy, and freedom from abuse and discrimination;

(i) Refuse treatment or services;

(j) Have property treated with respect;

(k) Privacy of personal information and confidentiality of health care records;

(l) Be cared for by properly trained personnel, contractors and volunteers with coordination of services;

(m) A fully itemized billing statement upon request, including the date of each service and the charge. Licensees providing services through a managed care plan are not required to provide itemized billing statements; and

(n) Be informed about advanced directives and the licensee's responsibility to implement them.

(2) An in-home services licensee must ensure that the rights under this section are implemented and updated as appropriate.

[Statutory Authority: Chapter 70.127 RCW. 02-18-026, § 246-335-075, filed 8/23/02, effective 10/1/02.]

WAC 246-335-080 Home health plan of care. (1) Home health licensees must, except as provided in subsections (2) and (3) of this section:

(a) Develop and implement a written home health plan of care for each patient with input from the patient or designated family member and authorizing practitioner;

(b) Assure each plan of care is developed by appropriate agency personnel and is based on a patient assessment, except when providing one-time visits under subsection (3) of this section;

(c) Assure the home health plan of care includes:

(i) Current diagnoses and information on health status;

(ii) Goals or outcome measures;

(iii) Types and frequency of services to be provided;

(iv) Home medical equipment and supplies used by the patient;

(v) Orders for treatments and their frequency to be provided and monitored by the licensee;

(vi) Special nutritional needs and food allergies;

(vii) Orders for medications to be administered and monitored by the licensee including name, dose, route, and frequency;

(viii) Medication allergies;

(ix) The patient's physical, cognitive and functional limitations;

(x) Discharge and referral plan;

(xi) Patient and family education needs pertinent to the care being provided by the licensee;

(xii) Resuscitation status of the patient according to documentation consistent with the Natural Death Act and advance directives, chapter 70.122 RCW; and

(xiii) The level of medication assistance to be provided.

(d) Develop and implement a system to:

(i) Assure the plan of care is reviewed and updated by appropriate agency personnel according to the following time frames:

(A) For patients requiring acute care services, every two months;

(B) For patients requiring maintenance services, every six months; and

(C) For patients requiring only professional medical equipment assessment services or home health aide only services, every twelve months.

(ii) Assure the plan of care is signed or authenticated and dated by appropriate agency personnel and the authorizing practitioner, according to the time frames in (d)(i)(A), (B) or (C) of this subsection;

(iii) Assure the plan care is returned to the agency within sixty days of the initial date of service or date of review and update;

(iv) Inform the authorizing practitioner regarding changes in the patient's condition that indicate a need to change the plan of care;

(v) Obtain approval from the authorizing practitioner for additions and modifications;

(vi) Assure all verbal orders for modification to the plan of care are immediately documented in writing and signed or authenticated and dated by an agency individual authorized within the scope of practice to receive the order and signed or authenticated by the authorizing practitioner and returned to the agency within sixty days of the date the verbal orders were received.

(2) Home health agencies providing home health aide only services to a patient may develop a modified plan of care

by providing only the following information on the plan of care:

(a) Types and frequency of services to be provided;

(b) Home medical equipment and supplies used by the patient;

(c) Special nutritional needs and food allergies;

(d) The patient's physical, cognitive and functional limitations; and

(e) The level of medication assistance to be provided.

(3) Home health agencies providing a one-time visit for a patient may provide the following written documentation in lieu of the home health plan of care and patient record requirements in WAC 246-335-110 (1)(c):

(a) Patient name, age, current address, and phone number;

(b) Confirmation that the patient was provided a written bill of rights under WAC 246-335-075;

(c) Patient consent for services to be provided;

(d) Authorizing practitioner orders; and

(e) Documentation of services provided.

[Statutory Authority: Chapter 70.127 RCW. 02-18-026, § 246-335-080, filed 8/23/02, effective 10/1/02.]

WAC 246-335-085 Hospice plan of care. (1) Hospice licensees must, except as provided in subsection (2) of this section:

(a) Develop and implement a written hospice plan of care for each patient with input from the authorizing practitioner, appropriate interdisciplinary team members, and the patient or designated family member;

(b) Assure each plan of care is developed by appropriate agency personnel and is based on a patient and family assessment;

(c) Assure the hospice plan of care includes:

(i) Current diagnoses and information on health status;

(ii) Goals or outcome measures;

(iii) Symptom and pain management;

(iv) Types and frequency of services to be provided;

(v) Home medical equipment and supplies used by the patient;

(vi) Orders for treatments and their frequency to be provided and monitored by the licensee;

(vii) Special nutritional needs and food allergies;

(viii) Orders for medications to be administered and monitored by the licensee including name, dose, route, and frequency;

(ix) Medication allergies;

(x) The patient's physical, cognitive and functional limitations;

(xi) Patient and family education needs pertinent to the care being provided by the licensee;

(xii) Resuscitation status of the patient according to documentation consistent with the Natural Death Act and advance directives, chapter 70.122 RCW; and

(xiii) The level of medication assistance to be provided;

(d) Develop and implement a system to:

(i) Assure and document the plan of care is reviewed by the appropriate interdisciplinary team members within the first week of admission and every two weeks thereafter;

(ii) Assure the plan of care is signed or authenticated and dated by appropriate agency personnel and the authorizing practitioner;

(iii) Assure the plan of care is returned to the agency within sixty days from the initial date of service;

(iv) Inform the authorizing practitioner regarding changes in the patient's condition that indicates a need to change the plan of care;

(v) Obtain approval from the authorizing practitioner for additions and modifications; and

(vi) Assure all verbal orders for modification to the plan of care are immediately documented in writing and signed or authenticated and dated by an agency individual authorized within the scope of practice to receive the order and signed or authenticated by the authorizing practitioner and returned to the agency within sixty days from the date the verbal orders were received.

(2) Hospice agencies providing a one-time visit for a patient may provide the following written documentation in lieu of the hospice plan of care and patient record requirements in WAC 246-335-110 (1)(c):

(a) Patient's name, age, current address, and phone number;

(b) Confirmation that the patient was provided a written bill of rights under WAC 246-335-075;

(c) Patient consent for services to be provided;

(d) Authorizing practitioner orders; and

(e) Documentation of services provided.

[Statutory Authority: Chapter 70.127 RCW. 02-18-026, § 246-335-085, filed 8/23/02, effective 10/1/02.]

WAC 246-335-090 Home care plan of care. (1) Home care licensees must, except as provided in subsection (2) of this section:

(a) Develop and implement a written home care plan of care for each client with input and written approval by the client or designated family member;

(b) Assure each plan of care is developed by appropriate agency personnel, lists services requested or recommended to meet client needs, and is based on an on-site visit, under agency policies and procedures;

(c) Assure the home care plan of care includes:

(i) The client's functional limitations;

(ii) Nutritional needs and food allergies for meal preparation;

(iii) Home medical equipment and supplies relevant to the plan of care;

(iv) Type and schedule of services to be provided; and

(v) Nonmedical tasks requested;

(d) Assure the plan of care is reviewed on-site, updated, approved and signed by appropriate agency personnel and the client or designated family member every twelve months and as necessary based on changing client needs.

(2) Home care agencies providing a one-time visit for a client may provide the following written documentation in lieu of the home care plan of care and client record requirements in WAC 246-335-110 (1)(c):

(a) Client name, age, current address, and phone number;

(b) Confirmation that the client was provided a written bill of rights under WAC 246-335-075;

(c) Client consent for services to be provided; and

(d) Documentation of services provided.

[Statutory Authority: Chapter 70.127 RCW. 02-18-026, § 246-335-090, filed 8/23/02, effective 10/1/02.]

WAC 246-335-095 Supervision of home health care. The following supervision requirements only apply to home health agencies:

(1) A licensee must employ a director of clinical services;

(2) The director of clinical services or designee must be available during all hours patient care is being provided;

(3) The director of clinical services must designate in writing a similarly qualified alternate to act in the director's absence;

(4) The director of clinical services or designee must assure:

(a) Coordination, development and revision of written patient care policies and procedures related to each service provided;

(b) Supervision of all patient care provided by personnel and volunteers;

(c) Evaluation of services provided by contractors;

(d) Coordination of services when one or more licensee is providing care to the patient;

(e) Compliance with the plan of care;

(f) All direct care personnel, contractors, and volunteers observe and recognize changes in the patient's conditions, and report any changes to the director or designee; and

(g) All direct care personnel, contractors, and volunteers initiate emergency procedures according to agency policy;

(5) The licensee must document supervision including, but not limited to:

(a) RN supervision when using the services of a RN or LPN, in accordance with chapter 18.79 RCW;

(b) For patients receiving acute care services, supervision of the home health aide services during an on-site visit with or without the home health aide present must occur once a month to evaluate compliance with the plan of care and patient satisfaction with care. The supervisory visit must be conducted by a licensed nurse or therapist in accordance with the appropriate practice acts;

(c) For patients receiving maintenance care or home health aide only services, supervision of the home health aide services during an on-site visit with or without the home health aide present must occur every six months to evaluate compliance with the plan of care and patient satisfaction with care. The supervisory visit must be conducted by a licensed nurse or licensed therapist in accordance with the appropriate practice acts; and

(d) Supervision by a licensed therapist when using the services of a therapy assistant in accordance with the appropriate practice acts; and

(6) The licensee using home health aides must assure:

(a) Each home health aide reviews the plan of care or written instructions for the care of each patient prior to providing home health aide services and whenever there is a change in the plan of care; and

(b) Each home health aide assists with medications according to WAC 246-335-015, and agency policy.

[Statutory Authority: Chapter 70.127 RCW. 02-18-026, § 246-335-095, filed 8/23/02, effective 10/1/02.]

WAC 246-335-100 Supervision of hospice care. The following supervision requirements only apply to hospice agencies:

(1) A licensee must employ a director of clinical services;

(2) The director of clinical services or designee must be available twenty-four hours per day, seven days per week;

(3) The director of clinical services must designate in writing a similarly qualified alternate to act in the director's absence;

(4) The director of clinical services or designee must assure:

(a) Coordination, development and revision of written patient and family care policies and procedures related to each service provided;

(b) Supervision of all patient and family care provided by personnel and volunteers;

(c) Evaluation of services provided by contractors;

(d) Coordination of services when one or more licensee is providing care to the patient and family;

(e) Compliance with the plan of care;

(f) All direct care personnel, contractors, and volunteers observe and recognize changes in the patient's condition, and report any changes to the director or designee; and

(g) All direct care personnel, contractors, and volunteers initiate emergency procedures according to agency policy;

(5) The licensee must document supervision including, but not limited to:

(a) RN supervision when using the services of a RN or LPN, in accordance with chapter 18.79 RCW;

(b) Licensed nurse supervision of home health aide services during an on-site visit with or without the home health aide present once a month to evaluate compliance with the plan of care and patient and family satisfaction with care;

(c) Supervision by a licensed therapist when using the services of a therapy assistant in accordance with the appropriate practice acts; and

(6) The licensee using home health aides must assure:

(a) Each home health aide reviews written instructions for the care of each patient and family prior to providing home health aide services and whenever there is a change to the plan of care; and

(b) Each home health aide assists with medications according to WAC 246-335-015, and agency policy.

[Statutory Authority: Chapter 70.127 RCW. 02-18-026, § 246-335-100, filed 8/23/02, effective 10/1/02.]

WAC 246-335-105 Supervision of home care. The following supervision requirements only apply to home care agencies:

(1) The licensee must employ a supervisor of direct care services;

(2) The supervisor or designee must be available during all hours of client care;

(3) The supervisor of direct care services must designate in writing a similarly qualified alternate to act in the supervisor's absence;

(4) The supervisor of direct care services must assure:

(a) Supervision of all client care provided by personnel and volunteers;

(b) Evaluation of services provided by contractors;

(c) Coordination, development and revision of written client care policies;

(d) Participation in coordination of services when more than one licensee is providing care to the client;

(e) Compliance with the plan of care;

(f) All direct care personnel, contractors, and volunteers observe and recognize changes in the client's needs, and report any changes to the director or designee;

(g) All direct care personnel, contractors, and volunteers initiate emergency procedures according to agency policy;

(h) Each home care aide reviews the plan of care or written instructions for the care of each client prior to providing home care aide services and whenever there is a change in the plan of care; and

(i) Each home care aide assists with medications according to WAC 246-335-015, and agency policy; and

(5) The licensee must document supervision including, but not limited to, client contact every six months by phone or visit to evaluate compliance with the plan of care and to assess client satisfaction.

[Statutory Authority: Chapter 70.127 RCW. 02-18-026, § 246-335-105, filed 8/23/02, effective 10/1/02.]

WAC 246-335-110 Patient/client records. (1) The licensee must:

(a) Maintain a current record for each patient or client consistent with chapter 70.02 RCW, Medical records—Health care information access and disclosure;

(b) Assure that the record is:

(i) Accessible, in an integrated document, in the licensee's office site for review by appropriate direct care personnel, volunteers, contractors, and the department;

(ii) Written legibly in permanent ink or retrievable by electronic means;

(iii) On the licensee's standardized forms;

(iv) In a legally acceptable manner;

(v) Kept confidential;

(vi) Chronological in its entirety or by the service provided;

(vii) Fastened together to avoid loss of record contents; and

(viii) Kept current with all documents filed according to agency time frames per agency policies and procedures;

(c) Include documentation of the following in each record, unless exempted in (d) of this subsection:

(i) Patient or client's name, age, current address and phone number;

(ii) Patient's or client's consent for service, care, and treatment;

(iii) Payment source and patient or client responsibility for payment;

(iv) Initial assessment when providing home health, hospice and hospice care center services, except when providing home health aide only services under WAC 246-335-080(5);

(v) Plan of care according to WAC 246-335-080, 246-335-085, 246-335-090, and 246-335-155(9), depending upon the service provided;

(vi) Signed or authenticated and dated notes documenting and describing services provided during each patient or client contact;

(vii) Observations and changes in the patient's or client's condition or needs;

(viii) For patients receiving home health, hospice and hospice care center services, with the exception of home health aide only services per WAC 246-335-080(5), authorized practitioner orders and documentation of response to medications and treatments ordered;

(ix) Supervision of home health aide and home care aide services according to WAC 246-335-095 (5)(b) and (c), 246-335-100 (5)(b), and 246-335-105(5); and

(x) Other documentation as required by this chapter;

(d) For patients receiving a one-time visit under WAC 246-335-080(3), 246-335-085(2) or 246-335-090(2), provide the documentation required in these sections;

(e) Consider the records as property of the licensee and allow the patient or client access to his or her own record; and

(f) Upon request and according to agency policy and procedure, provide patient or client information or a summary of care when the patient or client is transferred or discharged to another agency or facility.

(2) The licensee must maintain records for:

(a) Adults—three years following the date of termination of services; and

(b) Minors—three years after attaining age eighteen, or five years following discharge, whichever is longer.

(3) The licensee must:

(a) Store records to prevent loss of information and to maintain the integrity of the record and protect against unauthorized use;

(b) Maintain or release records after a patient's or client's death according to chapter 70.02 RCW, Medical records—Health care information access and disclosure; and

(c) After ceasing operation, retain or dispose of records in a confidential manner according to the time frames in subsection (2) of this section.

[Statutory Authority: Chapter 70.127 RCW. 02-18-026, § 246-335-110, filed 8/23/02, effective 10/1/02.]

WAC 246-335-115 Quality improvement. Every in-home services licensee must maintain a quality improvement program to assure the quality of care and services provided throughout its service area or within a hospice care center thatincludes, at a minimum:

(1) A complaint process that includes a procedure for the receipt, investigation, and disposition of complaints regarding services provided under RCW 70.127.120(2);

(2) A method to identify, monitor, evaluate, and correct problems identified by patients or clients, families, personnel, contractors, or volunteers; and

(3) A system to assess patient or client satisfaction.

[Statutory Authority: Chapter 70.127 RCW. 02-18-026, § 246-335-115, filed 8/23/02, effective 10/1/02.]

WAC 246-335-120 Home medical supplies and equipment. This section applies only to home health and hospice agencies and hospice care centers providing or contracting for medical supplies or equipment services. The applicant or licensee must:

(1) If the applicant or licensee provides medical supplies or equipment services, develop and implement policies and procedures to:

(a) Maintain medical supplies and equipment;

(b) Clean, inspect, repair and calibrate equipment per the manufacturers' recommendations, and document the date and name of individual conducting the activity;

(c) Assure safe handling and storage of medical supplies and equipment;

(d) Inform the patient or designated family member of the cost and method of payment for equipment, equipment repairs and equipment replacement;

(e) Document the patient or designated family member's approval;

(f) Instruct each patient or family to use and maintain supplies and equipment in a language or format the patient or family understands, using one or more of the following:

(i) Written instruction;

(ii) Verbal instruction; or

(iii) Demonstration;

(g) Document the patient or family understanding of the instructions provided;

(h) Replace supplies and equipment essential for the health or safety of the patient; and

(i) Identify and replace equipment recalled by the manufacturer.

(2) If the applicant or licensee contracts for medical supplies or equipment services, develop and implement policies and procedures to assure that contractors have policies and procedures consistent with subsection (1) of this section.

[Statutory Authority: Chapter 70.127 RCW. 02-18-026, § 246-335-120, filed 8/23/02, effective 10/1/02.]

WAC 246-335-125 Exemptions and alternative methods. (1) To request an exemption from the minimum requirements in this chapter, the licensee must submit a written request to the department, including:

(a) A description of the requested exemption and alternatives, if appropriate;

(b) Rationale for the exemption;

(c) Impact of the exemption on public health and safety; and

(d) Any other information the department requests.

(2) The department may grant the licensee an exemption from a requirement of this chapter if:

(a) The department determines the exemption will not jeopardize public health or safety; and

(b) The exemption is not contrary to the intent of chapter 70.127 RCW and the requirements of this chapter, a specific requirement of this chapter.

(3) The licensee must retain a copy of each approved exemption and have them available at all times.

(4) An exemption is limited to a specific requirement and for the licensee who receives it. The exemption does not apply to any new applicants or other existing licensees.

[Statutory Authority: Chapter 70.127 RCW. 02-18-026, § 246-335-125, filed 8/23/02, effective 10/1/02.]

PART 2
REQUIREMENTS SPECIFIC TO HOSPICE CARE CENTERS

WAC 246-335-130 Applicability. The requirements in Part 2 of this chapter only apply to hospice care centers.

[Statutory Authority: Chapter 70.127 RCW. 02-18-026, § 246-335-130, filed 8/23/02, effective 10/1/02.]

WAC 246-335-135 Definitions. The definitions for Part 2 of this chapter are located in WAC 246-335-015.

[Statutory Authority: Chapter 70.127 RCW. 02-18-026, § 246-335-135, filed 8/23/02, effective 10/1/02.]

WAC 246-335-140 License required. (1) A person must possess a current license issued by the department before advertising, operating, managing, conducting, opening or maintaining a hospice care center.

(2) Prior to being issued a license as a hospice care center, an applicant must:

(a) Be licensed as an in-home services agency licensed to provide hospice services;

(b) Obtain a certificate of need under chapter 70.38 RCW;

(c) Complete the construction review process;

(d) Receive a certificate of occupancy by local building officials;

(e) Submit a completed application and appropriate fee;

(f) Develop policies and procedures addressing the content of this chapter; and

(g) Meet the requirements of this chapter as determined by an initial survey completed by the department.

[Statutory Authority: Chapter 70.127 RCW. 02-18-026, § 246-335-140, filed 8/23/02, effective 10/1/02.]

WAC 246-335-145 Initial application. An applicant for initial licensure must submit to the department:

(1) A completed application on forms provided by the department;

(2) Evidence of current professional liability insurance in the amount of one hundred thousand dollars per occurrence and public liability and property damage insurance in the amount of two hundred thousand dollars per occurrence as a minimum;

(3) Disclosure statements and criminal history background checks obtained within three months of the application date for the administrator and director of clinical services in accordance with RCW 43.43.830 through 43.43.845;

(4) The following information:

(a) Name of managing personnel, officers, administrator, director of clinical services and partners or individuals owning ten percent or more of the applicant's assets;

(b) A description of the organizational structure;

(c) A description of the hospice care center service categories to be offered directly or under contract;

(d) Documentation that no more than forty-nine percent of patient care days, in the aggregate on a biennial basis will be provided in a hospice care center, under RCW 70.127.280 (1)(d);

(e) Name, address, and phone numbers of the center location(s) within the state;

(f) A copy of their current business license;

(5) Other information as required by the department; and

(6) Fees specified in WAC 246-335-990.

[Statutory Authority: Chapter 70.127 RCW. 02-18-026, § 246-335-145, filed 8/23/02, effective 10/1/02.]

WAC 246-335-150 Renewal. At least thirty days before the expiration date of the current license, a licensee must submit the following to the department:

(1) A completed application on forms provided by the department;

(2) Evidence of continuing insurance coverage according to WAC 246-335-145(2);

(3) Disclosure statements and criminal history background checks obtained within three months of renewal for the administrator and director of clinical services when these individuals are new to the hospice care center since initial licensure or the last renewal, in accordance with RCW 43.43.830 through 43.43.845; and

(4) Information and fees listed in WAC 246-335-145 (4) through (6).

[Statutory Authority: Chapter 70.127 RCW. 02-18-026, § 246-335-150, filed 8/23/02, effective 10/1/02.]

WAC 246-335-155 Other general hospice care center licensing requirements. (1) Change of ownership. A hospice care center licensee must meet the change of ownership requirements in WAC 246-335-035.

(2) Applicant or licensee rights and responsibilities. A hospice care center applicant or licensee must meet the applicant or licensee responsibility requirements in WAC 246-335-040.

(3) Department responsibilities. The department responsibility requirements in WAC 246-335-045 apply to hospice care center licensees and applicants.

(4) Plan of operation. A hospice care center applicant or licensee must meet the plan of operation requirements in WAC 246-335-055, and assure pets or animals living on the premises:

(a) Have regular examinations and immunizations, appropriate for the species, by a veterinarian licensed in Washington state;

(b) Be veterinarian certified as free of diseases transmittable to humans;

(c) Are restricted from food preparation areas; and

(d) Include only those customarily considered domestic pets.

(5) Delivery of services. A hospice care center applicant or licensee must:

(a) Meet the delivery of services requirements in WAC 246-335-060; and

(b) Establish and implement policies and procedures that assure:

(i) Auditory and physical privacy for the patient and family during the admitting process;

(ii) Patient rooms are private, unless the patient requests a roommate. Only two patients may share a room;

(iii) Each patient is provided a bed with a mattress appropriate to the special needs and size of the patient; and

(iv) Availability of clean bed and bath linens that are in good condition and free of holes and stains.

(6) Personnel, contractor, and volunteer policies. A hospice care center applicant or licensee must:

(a) Meet the personnel, contractor and volunteer policy requirements in WAC 246-335-065; and

(b) Assure training in the safe storage and handling of oxygen containers and other equipment as necessary.

(7) Personnel, contractor, and volunteer records. A hospice care center applicant or licensee must meet the personnel, contractor, and volunteer records requirements in WAC 246-335-070.

(8) Bill of rights. A hospice care center applicant or licensee must:

(a) Meet the bill of rights requirements in WAC 246-335-075; or

(b) For patients already being served by the hospice agency operating the hospice care center, assure:

(i) The bill of rights requirements have been provided to the patient and designated family member; and

(ii) Provide any additional information needed specific to the hospice care center.

(9) Plan of care. A hospice care center applicant or licensee must:

(a) Meet the plan of care requirements in WAC 246-335-085; or

(b) For patients already being served by the hospice agency operating the hospice care center, review the plan of care for any necessary revisions, and maintain the plan of care with any revisions in the hospice care center.

(10) Supervision. A hospice care center applicant or licensee must:

(a) Meet the supervision requirements in WAC 246-335-100; and

(b) Develop any necessary supervision requirements specific to:

(i) The hospice care center service category staffing requirements; and

(ii) Supervising personnel, volunteers and evaluating contractor services who are employed by a separately licensed hospice agency.

(11) Patient records. A hospice care center applicant or licensee must meet the requirements in WAC 246-335-110.

(12) Quality improvement. A hospice care center applicant or licensee must:

(a) Meet the quality improvement requirements in WAC 246-335-115; or

(b) Assure the hospice agency operating the hospice care center has a quality improvement program that applies to the hospice care center; or

(c) Implement any needed changes or additions to the current hospice agency quality improvement program.

(13) Home medical supplies and equipment. A hospice care center applicant or licensee must meet the home medical supplies and equipment requirements in WAC 246-335-120.

(14) Staffing requirements. A hospice care center applicant or licensee must implement the following staffing requirements:

(a) There must be adequate staffing on duty at all times. Considerations for determining adequate staffing include, but are not limited to:

(i) Number of patients currently admitted and residing in the center;

(ii) Specific patient care requirements;

(iii) Family care needs; and

(iv) Availability of support from other interdisciplinary team members;

(b) Two people, who may either be personnel, contractors or volunteers, must be on duty twenty-four hours per day, seven days per week;

(c) A registered nurse must be available twenty-four hours per day for consultation and direct participation in nursing care;

(d) A registered nurse must be on-site when required to perform duties specified in chapter 18.79 RCW;

(e) When providing general inpatient services, a hospice care center must comply with the staffing requirements in (a) through (d) of this subsection, and assure:

(i) A registered nurse is present twenty-four hours per day, seven days per week, to direct nursing services; and

(ii) Care is provided by either a RN, LPN or home health aide to meet the needs of each patient in accordance with the plan of care; and

(f) When providing continuous care services, a hospice care center must, in addition to the staffing requirements in (a) through (d) of this subsection, assure:

(i) One-on-one staffing, directed by an RN, for a minimum of eight hours to a maximum of twenty-four hours per calendar day; and

(ii) Care is provided by either a RN, LPN or home health aide to meet the needs of each patient in accordance with the plan of care.

(15) A hospice care center may either be owned or leased. If the hospice agency leases space, all delivery of interdisciplinary services, including staffing and management, must be done by the hospice agency per RCW 70.127.-280 (1)(g).

[Statutory Authority: Chapter 70.127 RCW. 02-18-026, § 246-335-155, filed 8/23/02, effective 10/1/02.]

WAC 246-335-160 Nutritional services. (1) Nutritional services must be supervised by an RN or dietician.

(2) Appropriate nutritional consultation must be provided to the patient and family regarding the patient's dietary needs.

(3) Food must be prepared and served at intervals appropriate to the needs of patients, recognizing the unique dietary needs and changes of the terminally ill.

(4) Nutritional services must either be provided directly or through written agreement with a food service company.

(5) Food service sanitation must meet the requirements of chapter 246-215 WAC.

(6) Policies and procedures on nutritional services must include:

(a) Food storage;

(b) Food preparation;

(c) Food service; and

(d) Scheduled cleaning of all food service equipment and work areas.

(7) A copy of the procedures must be kept within or adjacent to the food service area and must be available for reference by nutritional service personnel and other personnel at all times.

[Statutory Authority: Chapter 70.127 RCW. 02-18-026, § 246-335-160, filed 8/23/02, effective 10/1/02.]

WAC 246-335-165 Infection control. A hospice care center applicant or licensee must develop and implement written policies and procedures addressing infection control pertinent to the hospice care center and consistent with WAC 246-335-060 (6) and (7).

[Statutory Authority: Chapter 70.127 RCW. 02-18-026, § 246-335-165, filed 8/23/02, effective 10/1/02.]

WAC 246-335-170 Emergency preparedness. A hospice care center applicant or licensee must:

(1) Develop and implement written policies and procedures governing emergency preparedness and fire protection;

(2) Develop an acceptable written plan, periodically rehearsed with personnel, contractors, and volunteers, to be followed in the event of an internal or external emergency, and for the care of casualties of the patient and family, personnel, contractors, and volunteers arising from such emergencies; and

(3) Develop a fire protection plan to include:

(a) Instruction for all personnel, contractors or volunteers in use of alarms, fire fighting equipment, methods of fire containment, evacuation routes and procedures for calling the fire department and the assignment of specific tasks to all personnel, contractors and volunteers in response to an alarm; and

(b) Fire drills for each shift of personnel.

[Statutory Authority: Chapter 70.127 RCW. 02-18-026, § 246-335-170, filed 8/23/02, effective 10/1/02.]

WAC 246-335-175 Pharmaceutical services. The licensee must assure that all pharmaceutical services are provided consistent with chapter 246-865 WAC and the following requirements:

(1) Pharmaceutical services must be available twenty-four hours per day to provide medications and supplies through a licensed pharmacy;

(2) A pharmacist must provide sufficient on-site consultation to ensure that medications are ordered, prepared, disposed, secured, stored, accounted for and administered in accordance with the policies of the center and chapter 246-865 WAC;

(3) Medications must be administered only by individuals authorized to administer medications;

(4) Medications may be self-administered or administered by a designated family member in accordance with WAC 246-865-060 (7)(f);

(5) Drugs for external use must be stored apart from drugs for internal use;

(6) Poisonous or caustic medications and materials including housekeeping and personal grooming supplies must show proper warning or poison labels and must be stored safely and separately from other medications and food supplies;

(7) The hospice care center must maintain an emergency medication kit appropriate to the needs of the center;

(8) Medications brought into the hospice care center by patients to be administered by an appropriate health care professional while in the center must be specifically ordered by an authorizing practitioner and must be identified by a pharmacist or licensed nurse with pharmacist consultation prior to administration;

(9) Drugs requiring refrigeration must be kept in a separate refrigeration unit;

(10) Schedule II - IV controlled substances must be:

(a) Kept in a separate keyed storage unit; and

(b) When heat sensitive, be kept in a locked refrigeration unit;

(11) Schedule II - IV controlled substances no longer needed by the patient must be disposed in compliance with chapter 246-865 WAC;

(12) The hospice care center must provide for continuation of drug therapy for patients when temporarily leaving the center in accordance with WAC 246-865-070;

(13) If planning to use an automated drug distribution device, the hospice care center must first receive board of pharmacy approval; and

(14) If planning to provide pharmacy services beyond the scope of services defined in this section, the hospice care center must comply with the requirements for a licensed pharmacy in chapter 246-869 WAC.

[Statutory Authority: Chapter 70.127 RCW. 02-18-026, § 246-335-175, filed 8/23/02, effective 10/1/02.]

PHYSICAL ENVIRONMENT REQUIREMENTS SPECIFIC TO HOSPICE CARE CENTERS

WAC 246-335-180 Applicability. The purpose of the following construction regulations is to provide minimum standards for a safe, homelike, and effective patient care environment in hospice care centers consistent with other applicable rules and regulations without redundancy and contradictory requirements. Rules allow flexibility in achieving desired outcomes and enable hospice care centers to respond to changes in technologies and health care innovations.

(1) These regulations apply to all construction as defined in WAC 246-335-015.

(2) The requirements in this section in effect at the time the application, fee, and construction documents are submitted to the department for review will apply for the duration of the construction project.

[Statutory Authority: Chapter 70.127 RCW. 02-18-026, § 246-335-180, filed 8/23/02, effective 10/1/02.]

WAC 246-335-185 Application and approval. (1) A hospice care center applicant must submit an application and construction documents under WAC 246-335-195 and provide documentation of approval from local zoning commissions, fire departments, and building departments, if applicable, to the department for review and approval for all construction as defined in WAC 246-335-015.

(2) A hospice care center applicant must:

(a) Respond in writing when the department requests additional or corrected construction documents;

(b) Complete construction in accordance with the final "department approved" documents;

(c) Submit to the department for review any change orders, addenda or modifications to the construction documents for review and approval;

(d) Notify the department in writing when construction is completed;

(e) Submit to the department a copy of the local jurisdictions' certificate of occupancy; and

(f) Submit 8 1/2 by 11 inch floor plans.

(3) The department shall notify the hospice care center in writing when:

(a) The construction documents are approved; or

(b) The construction documents are not approved. If the construction documents are not approved, the department shall submit a letter to the applicant identifying sections of this chapter for which a requirement is stated and there is a deficiency.

(4) A hospice care center applicant must not begin construction until the construction documents are approved by the department and the local jurisdictions have issued the appropriate permits.

[Statutory Authority: Chapter 70.127 RCW. 02-18-026, § 246-335-185, filed 8/23/02, effective 10/1/02.]

WAC 246-335-190 Construction and design codes. A hospice care center applicant must, through its design, construction and necessary permits demonstrate compliance with the following codes and local jurisdiction standards:

(1) As adopted by the state building code council, and the *Uniform Building Code Standards*, as published by the International Conference of Building Officials as amended and adopted by the Washington state building code council and published as chapter 51-40 WAC;

(2) *The Uniform Mechanical Code*, (as published by the International Conference of Building Officials and the International Association of Plumbing and Mechanical Officials) as amended and adopted by the Washington state building code council and published as chapter 51-42 WAC;

(3) *Fire Code* and *Uniform Fire Code Standards*, as published by the International Conference of Building Officials and the Western Fire Chiefs Association as amended and adopted by the Washington state building code council and published as chapters 51-44 and 51-45 WAC;

(4) *Plumbing Code* and *Uniform Plumbing Code Standards*, as published by the International Association of Plumbing and Mechanical Officials, as amended and adopted by the Washington state building code council and published as chapters 51-46 and 51-47 WAC;

(5) *State Ventilation and Indoor Air Quality Code*, as adopted by the Washington state building code council and filed as chapter 51-13 WAC;

(6) *The Washington State Energy Code*, as amended and adopted by the Washington state building code council and filed as chapter 51-13 WAC;

(7) Electric Code of the National Fire Protection Association (NFPA-70) as adopted by the Washington state department of labor and industries including chapter 296-46A WAC;

(8) *Accepted Procedure and Practice in Cross-contamination Control*, Pacific Northwest Edition, 9th Edition, American Water Works Association;

(9) If planning on caring for patients with mycobacterium tuberculosis, *Guidelines for Preventing the Transmission of Mycobacterium Tuberculosis in Health Care Facilities*, 1994. Morbidity and Mortality Weekly Report (MMWR), Volume 43, October 28, 1994; and

(10) *National Fire Protection Association Standards 99*, 1999 Edition.

[Statutory Authority: Chapter 70.127 RCW. 02-18-026, § 246-335-190, filed 8/23/02, effective 10/1/02.]

WAC 246-335-195 Construction documents. (1) Construction documents submitted to the department for review and approval must include:

(a) A written functional program that contains information concerning services to be provided and operational methods to be used;

(b) Two sets of coordinated and dimensioned construction drawings, drawn to scale, including:

(i) Site plan showing the location of utility lines, parking, driveways, access for emergency vehicles, sufficient space for garbage storage and disposal, oxygen tank or bulk storage, and delivery areas separated from mechanical air intakes per ventilation and mechanical codes;

(ii) Floor plans identifying each room by number, designating the function of each room, and identifying fixed and moveable equipment and furnishings;

(iii) Interior and exterior elevations;

(iv) Building sections and construction details;

(v) Schedules of room finishes, doors, finish hardware, and windows;

(vi) Mechanical, including plumbing, heating, ventilation, and air conditioning;

(vii) Electrical, including lighting, power, and communication systems;

(viii) Fire and life safety showing paths of egress, rated partitions and interim life safety to the point of egress;

(ix) Two sets of the fire sprinkler shop drawings, hydraulic calculations and equipment specifications, stamped by the fire sprinkler system designer; and

(x) Two sets of the fire alarm shop drawings and equipment specifications;

(c) One copy of the specifications that fully describes the workmanship, finishes, and materials; and

(d) If the project is a remodel of an existing facility, a plan that shows how they will ensure the health and safety of occupants during construction and installation of finishes must be submitted for review and approval prior to construction. This includes taking appropriate infection control measures, keeping the surrounding area free of dust and fumes, and assuring rooms or areas are well-ventilated, unoccupied, and unavailable for use until free of volatile fumes and odors.

(2) Drawings and specifications for construction must be prepared by, or under the direction of, an architect registered under chapter 18.08 RCW. The services of a consulting engineer registered under chapter 18.43 RCW must be used for the various branches of the work where appropriate. The services of a registered professional engineer may be used in lieu of the services of an architect if work involves engineering only. All drawings submitted by a registered professional must be stamped and signed.

(3) Compliance with these standards and regulations does not relieve the hospice care center of the need to comply with applicable state and local building and zoning codes.

[Statutory Authority: Chapter 70.127 RCW. 02-18-026, § 246-335-195, filed 8/23/02, effective 10/1/02.]

WAC 246-335-200 Site and site development. A hospice care center applicant or licensee must provide a site with utilities that meet uniform building code and local regulations including:

(1) Potable water supply meeting requirements in chapters 246-270, 246-290, and 246-291 WAC;

(2) Natural drainage or properly designed/engineered drainage system;

(3) Public or on-site sanitary sewage utilities meeting requirements in chapter 246-271 or 246-272 WAC;

(4) Physical access to community emergency services;

(5) Parking area, drives, and walkways:

(a) Convenient for patients, personnel, contractors, volunteers, and visitors, while avoiding interference with patient privacy and comfort;

(b) With surfaces useable in all weather and traffic conditions; and

(c) Illuminated at night.

[Statutory Authority: Chapter 70.127 RCW. 02-18-026, § 246-335-200, filed 8/23/02, effective 10/1/02.]

GENERAL HOSPICE CARE CENTER DESIGN REQUIREMENTS

WAC 246-335-205 General requirements. A hospice care center applicant or licensee must meet the following general design elements for patient and family care and support areas as described in this chapter.

(1) Design of the hospice care center must take into account:

(a) The number of patient rooms planned which must not include more than twenty patient beds;

(b) The requirements for patient rooms as specified in WAC 246-335-265; and

(c) The family, personnel and public area requirements for space, which may include multiuse areas, as specified in WAC 246-335-275.

(2) A hospice care center may either be freestanding or a separate portion of another building.

(3) The hospice care center must have a separate external entrance, clearly identifiable to the public.

(4) If the hospice care center provides optional services not authorized in this chapter, those services must be physically separate from the area providing hospice care center services by a one-hour fire barrier wall.

(5) Ceiling heights in occupied areas or areas intended for patient use must be sufficiently high to meet the functional needs and equipment requirements of the space. Suspended tracks, rails, lights, or other obstructions located in path of travel can not be less than seven feet above finished floor to lowest point of obstruction.

(6) A corridor system throughout the hospice care center designed for traffic circulation must provide patient safety with:

(a) A width of six feet for hospice care centers accommodating six or more patients and restrictions of no more than seven inches for egress of patient care areas; or

(b) A width of four feet for hospice care centers accommodating five or less patients and restrictions of no more than seven inches for egress of patient care areas.

(7) If patient rooms are located above grade level, the hospice care center must have at least one elevator or lift designed for patient transport by gurney or equivalent.

(8) Doors must be designed with:

(a) Nominal four foot width for patient room doors in the path of egress designed to prevent swinging into corridor widths;

(b) Provision for personnel, contractors, and volunteers to gain immediate emergency access to patient occupied rooms or areas;

(c) Ability to swing outward from patient toilet and bathing rooms; and

(d) Vision panels in all pairs of opposite swinging doors.

(9) The hospice care center must provide a fire suppression system conforming to *National Fire Protection Association 13 Standard for the Installation of Sprinkler Systems*, 1999 Edition.

(10) Stairways must be designed with slip-resistant floor surfaces and ramps with slip-resistant or carpeted floor surfaces are required.

(11) Design and construction must address the prevention of entrance and infestation by pests.

(12) Interior finishes must be suitable to the function of an area including:

(a) Floors must be finished with:

(i) Easily cleanable and/or maintainable surfaces;

(ii) Slip-resistant surfaces at entrances and other areas;

(iii) Edges covered and top set base with toe at all wall junctures; and

(b) Carpets are not permitted in toilets, bathrooms, kitchens, utility rooms, janitor closets, and other areas where flooding or infection control is an issue;

(c) Ceiling finishes must be easily cleanable or maintainable;

(d) Walls must be:

(i) Protected from impact in high traffic areas;

(ii) Finished with easily cleanable surfaces; and

(iii) Finished with water-resistant paint, glaze, or similar water-resistant finish extending above the splash line in all rooms or areas subject to splash or spray.

(13) The design must include space and adequate storage for facility drawings, records, and operation manuals.

[Statutory Authority: Chapter 70.127 RCW. 02-18-026, § 246-335-205, filed 8/23/02, effective 10/1/02.]

WAC 246-335-210 Furnishings. Furnishings of the hospice care center must be home-like and include lounge furniture in addition to furnishings in patient rooms. Accessories such as wallpaper, bedspreads, carpets and lamps must be:

(1) Selected to create a home-like atmosphere; and

(2) Installed per uniform building and fire codes and per manufacturer installation standards.

[Statutory Authority: Chapter 70.127 RCW. 02-18-026, § 246-335-210, filed 8/23/02, effective 10/1/02.]

WAC 246-335-220 Pharmaceutical services area. (1) Pharmaceutical services area(s) must be accessible only to authorized personnel.

(2) A hospice care center must provide pharmacy services area(s) consistent with WAC 246-865-050 which include adequate space for:

(a) A work counter;

(b) A handwash sink;

(c) A soap and paper towel dispenser;

(d) Drug storage units constructed of metal, solid wood, or plywood which provide:

(i) Locked storage for all drugs;

(ii) Separate keyed storage for Schedule II - IV controlled substances;

(iii) Segregated storage for each patient's drugs;

(e) A lockable refrigerator for storage of heat sensitive drugs; and

(f) Other storage needed according to the hospice care center's functional program.

[Statutory Authority: Chapter 70.127 RCW. 02-18-026, § 246-335-220, filed 8/23/02, effective 10/1/02.]

WAC 246-335-225 Food preparation. (1) A hospice care center applicant or licensee must:

(a) Locate food preparation areas to prevent objectionable heat, noise and odors to patient rooms;

(b) Provide a nourishment center for use by patients and family with:

(i) A refrigerator capable of maintaining 45°F or less;

(ii) A two-compartment sink;

(iii) A range with exhaust hood and/or microwave;

(iv) Work surfaces;

(v) Storage for single service utensils and food items;

(vi) Soap and paper towel dispensers or equivalent;

(vii) Space for waste containers; and

(viii) A self-dispensing ice machine (if not provided elsewhere in the hospice care center);

(2) The following requirements only apply if the hospice care center is planning to prepare meals and snacks for patients on-site:

(a) When primarily preparing individual meals or snacks for patients, in addition to the requirements in subsection (1) of this section, the nourishment center must include:

(i) A separate refrigerator for patients' food items capable of maintaining 45°F or less;

(ii) Separate storage for patient food items, cooking and eating utensils;

(iii) A handwash sink; and

(iv) A domestic dishwasher with a continuous supply of 155°F of water;

(b) When primarily preparing meals for fifteen or fewer patients at a time, the kitchen for preparation of patient meals and snacks must comply with chapter 246-215 WAC, Food sanitation, except, the hospice care center may use domestic or home type kitchen appliances including mechanical dishwashers, provided the licensee:

(i) Operates the appliances according to manufacturer's direction; and

(ii) Provides a continuous supply of water maintained at 155°F or more to the dishwasher(s); and

(c) When primarily preparing meals for sixteen or more patients at a time, the kitchen for preparation of patient meals and snacks must comply with chapter 246-215 WAC, Food sanitation.

[Statutory Authority: Chapter 70.127 RCW. 02-18-026, § 246-335-225, filed 8/23/02, effective 10/1/02.]

WAC 246-335-230 Linen handling facilities. A hospice care center applicant or licensee must provide linen handling facilities with the capacity for receiving, holding, sorting, and separating soiled and clean linens either in clean and soiled utility rooms meeting the requirements of WAC 246-335-200 or in a separate linen handling facility meeting the following requirements:

(1) Floor drain(s) located in the soiled linen area;

(2) Handwash sink in soiled and clean processing areas;

(3) Negative air pressure gradient with direction of air flow from clean side of room to dirty side of room if room is shared;

(4) A folding area on clean side of room; and

(5) Separate clean linen storage located to avoid sources of moist or contaminated air with:

(a) Storage for reserve supply of linens, blankets, and pillows; and

(b) Space for carts and/or shelves.

[Statutory Authority: Chapter 70.127 RCW. 02-18-026, § 246-335-230, filed 8/23/02, effective 10/1/02.]

WAC 246-335-235 Laundry facilities. A hospice care center applicant or licensee must provide laundry service through the use of:

(1) A commercial laundry service; or

(2) On-site laundry facilities with:

(a) A system to avoid through traffic or excessive heat, noise and odors to travel to patient rooms;

(b) Equipment capacity for processing laundry;

(c) Arrangement for uninterrupted work flow from soiled to clean function;

(d) Washing machine(s);

(e) Floor drains as required for equipment;

(f) Dryer(s);

(g) Dryer exhaust to the exterior and make-up air; and

(h) A handwash sink.

[Statutory Authority: Chapter 70.127 RCW. 02-18-026, § 246-335-235, filed 8/23/02, effective 10/1/02.]

WAC 246-335-240 Utility rooms. (1) A hospice care center applicant or licensee must provide a clean utility room with no direct connection to soiled utility services, including:

(a) Sufficient clean storage and handling area(s);

(b) Closed storage for clean and sterile supplies and equipment;

(c) A work surface;

(d) Handwash sink;

(e) Soap and towel dispenser; and

(f) A self-closing door.

(2) The hospice care center must provide a soiled utility room on each floor of the center with no direct connection to clean utility services, including:

(a) A clinic service sink, siphon jet or equivalent with bedpan flushing attachment unless bedpan flushing devices are furnished in all patient toilets;

(b) Counter top, two-compartment sink, and gooseneck spout or equivalent;

(c) Storage for cleaning supplies and equipment;

(d) Soap and towel dispenser;

(e) Locked storage for chemicals; and

(f) Self-closing door.

[Statutory Authority: Chapter 70.127 RCW. 02-18-026, § 246-335-240, filed 8/23/02, effective 10/1/02.]

PHYSICAL ENVIRONMENT—SPECIFIC DESIGN REQUIREMENTS

WAC 246-335-245 Plumbing. An applicant must design and install plumbing, including:

(1) Backflow prevention with devices on plumbing fixtures, equipment, facilities, buildings, premises, or areas which may cause actual or potential cross-connections of systems in order to prevent the backflow of water or other liquids, gases, mixtures, or substances into a water distribution system or other fixtures, equipment, facilities, buildings, or areas;

(2) Trap primers in floor drains and stand pipes subject to infrequent use;

(3) Wrist, knee or foot faucet controls or equivalent and gooseneck spouts without aerators on handwash sinks;

(4) Insulation on:

(a) Hot water piping systems;

(b) Cold water and drainage piping; and

(c) Piping exposed to outside temperatures; and

(5) Equipment to deliver hot water at point of use as follows:

(a) 120°F or less for handwash sinks and bathing fixtures;

(b) 160°F or more for laundry washers;

(c) 120°F or more for laundry washers using chemical sanitization;

(d) 120°F or more for mechanical dishwashers using chemical sanitization;

(e) 140°F or more for mechanical dishwashers using high temperature sanitization; and

(f) 180°F or more for sanitization cycle in high temperature mechanical dishwashers.

[Statutory Authority: Chapter 70.127 RCW. 02-18-026, § 246-335-245, filed 8/23/02, effective 10/1/02.]

WAC 246-335-250 Medical gases. If oxygen is stored or used on the premises, the following must apply in addition to other codes and regulations:

(1) Electrical equipment used in oxygen-enriched environments must be properly designed for use with oxygen and should be labeled for use with oxygen; and

(2) "No smoking" signs must be posted where oxygen is being administered.

[Statutory Authority: Chapter 70.127 RCW. 02-18-026, § 246-335-250, filed 8/23/02, effective 10/1/02.]

WAC 246-335-255 Heating, ventilating and air conditioning. (1) Hospice care centers must have systems to provide individual temperature control for patient rooms to assure patient preference and comfort. The hospice care center must have the capacity to maintain:

(a) Patient rooms at 70°F in summer and 80°F in winter; and

(b) Nonpatient care areas at 75°F in summer and 70°F in winter.

(2) Total air circulation rates measured in air changes per hour (ACH) and ventilation air quantities must be provided in the following areas, if applicable, as follows:

(a) Patient rooms - 4 ACH circulated, 2 ACH outside air;

(b) Corridors - 2 ACH with 20% minimum outside air;

(c) Toilets, bathing facilities, locker rooms, housekeeping closets, soiled linen handling facilities, soiled utility rooms and laundry rooms - minimum 10 ACH total or a minimum of 70 CFM exhausted directly to the outdoors;

(d) Clean linen handling facilities, clean utility rooms, and medication distribution rooms - 4 ACH total or a minimum of 70 CFM;

(e) Food preparation areas - 10 ACH with 2 ACH outside air; and

(f) All other areas not specifically addressed above must be designed in accordance with Table 2 of ASHRAE Standard 62-1999.

(3) Heating and air conditioning system fans must continuously operate to maintain required pressure differences. Heating and air conditioning system air flows must be balanced to maintain pressure differences as follows:

(a) Provide negative pressure for any of the following areas, if applicable:

(i) Toilet rooms and showers;

(ii) Janitor rooms;

(iii) Soiled utility rooms; and

(iv) Food service areas and other areas where moisture or odors are generated;

(b) Provide positive pressure for any of the following areas, if applicable:

(i) Medication distribution rooms;

(ii) Clean utility rooms; and

(iii) Other similar areas.

(4) System outdoor air inlets must be located at least ten feet from any exhaust fan outlet, plumbing vent, combustion appliance vent, or other sources of contaminated air.

(5) A kitchen grease hood must be installed, and the applicant must provide a section drawing showing listed assembly type(s), fan discharge type and direction, curb venting, all required clearances both above and below the roof, materials, cleanouts, access doors, hood overhang of cooking equipment and other details in accordance with NFPA 96, Uniform Mechanical Code Sections 507 and 508, WAC 388-78A-070 (2)(e)(ii)(E) and 388-78A-290 (1)(a).

(6) Independent cooling system must be in place for elevator machine rooms.

(7) Combination fire smoke dampers must be in place for penetrations of corridor walls and of occupancy separations required around mechanical rooms, laundry rooms and storage rooms used in common.

[Statutory Authority: Chapter 70.127 RCW. 02-18-026, § 246-335-255, filed 8/23/02, effective 10/1/02.]

WAC 246-335-260 Electrical service and distribution. A hospice care center applicant or licensee must provide general electrical service including:

(1) Tamperproof receptacles in patient rooms, toilets, and bathing facilities, and family, and public areas;

(2) Ground fault circuit interrupter (GFCI) receptacle when located within five feet of water source and above counters that contain sinks;

(3) Emergency electrical service with:

(a) Adequate emergency lighting in patient rooms;

(b) At a minimum, provisions must be made for emergency lighting for means of egress; and

(c) Power, appropriate to provide continuous operation of life support equipment;

(4) Lighting fixtures with:

(a) Number, type, and location to provide illumination for the functions of each area;

(b) A reading light and control, conveniently located for patient use at each bed in the patient rooms; and

(c) Protective lens or protective diffusers on overhead light fixtures:

(i) Over patient beds;

(ii) In areas where patient care equipment and supplies are processed; and

(iii) In nourishment centers or kitchen areas;

(d) A night light or equivalent low level illumination;

(e) Night light switches and general illumination switches located adjacent to the opening side of patient room doors; and

(5) An electronic means of communication that notifies on-duty personnel, contractors, or volunteers and that must:

(a) Be located at the head of the bed in patient rooms and in all common areas accessible by the patients;

(b) Be physically or verbally accessible by patients slumped forward on the floors of either the toilet, bathing facility, or dressing room; and

(c) Consider the patient's communication needs.

[Statutory Authority: Chapter 70.127 RCW. 02-18-026, § 246-335-260, filed 8/23/02, effective 10/1/02.]

PATIENT AREAS

WAC 246-335-265 Patient rooms. (1) A hospice care center applicant or licensee must locate patient rooms to exclude through traffic and minimize the penetration of objectionable odors and noise from other areas of the center.

(2) Hospice care centers must assure each patient room is:

(a) Directly accessible from a corridor; and

(b) A minimum of one hundred square feet for private rooms and one hundred sixty square feet for rooms allowing a roommate.

(3) All operable windows or openings that serve for ventilation must be provided with screening.

(4) Patient room must be located above grade level.

(5) Patient beds must be placed so they do not interfere with entrance, exit or traffic flow within the room.

(6) Patient rooms must be safe, private, clean and comfortable, allowing the patient to use personal belongings to the extent possible and include:

(a) Seating for several family members, with provision for at least one sleeping accommodation in patient rooms;

(b) A window with a view of landscaping to the exterior;

(c) A noncoin-operated telephone readily available for the patient and family to make and receive confidential calls; and

(d) A space suitable for hanging full-length garments and secure storage of personal belongings within the patient room.

[Statutory Authority: Chapter 70.127 RCW. 02-18-026, § 246-335-265, filed 8/23/02, effective 10/1/02.]

WAC 246-335-270 Patient toilets and bathing facilities. (1) Each patient toilet must adjoin the patient room and include:

(a) Bedpan flushing equipment if bedpan flushing equipment is not located in a soiled utility room;

(b) Grab bars located per chapter 51-40 WAC and securely mounted on both sides of the water closet, with at least one horizontal grab bar extending eighteen inches beyond the front of the water closet;

(c) A handwash sink;

(d) Single service soap and towel dispensers;

(e) Slip-resistant floor surfaces;

(f) Toilet paper holder;

(g) Backing to support mounting of all accessories; and

(h) Mirror and shelving or equivalent at each handwash sink.

(2) There must be at least one patient toilet in the hospice care center meeting the accessibility requirements in chapter 51-40 WAC for every four patient beds. A minimum of one patient toilet meeting the accessibility requirements is required for each hospice care center.

(3) Bathing facilities, which may be separate from patient toilet rooms, must include:

(a) With ten or fewer beds, one barrier free roll-in shower or accessible tub designed for ease of entry;

(b) With eleven or more beds one barrier free roll-in shower or accessible tub, and one additional shower or tub, neither of which need to be barrier free or accessible;

(c) Slip resistant floors;

(d) An adequate supply of hot water available at all times;

(e) A towel bar, hook, or ring;

(f) A robe hook; and

(g) Grab bars that are easily cleanable, resistant to corrosion, functionally designed, and securely mounted at patient bathing facilities in accordance with WAC 51-30-1100 including:

(i) One vertical bar at the faucet end; and

(ii) Bars located on two sides of each standard bathtub and shower.

[Statutory Authority: Chapter 70.127 RCW. 02-18-026, § 246-335-270, filed 8/23/02, effective 10/1/02.]

FAMILY, PERSONNEL, VOLUNTEER, CONTRACTOR AND PUBLIC AREAS

WAC 246-335-275 Family, personnel, volunteer, contractor, and public areas. (1) A hospice care center applicant or licensee must provide family use areas with:

(a) A minimum of two hundred square feet;

(b) Comfortable seating for several family members;

(c) Provision for families and patients to share meals;

(d) Drinking water;

(e) Public telephone;

(f) Information desk or directory signage; and

(g) Exterior, clear glass windows with a maximum sill height of thirty-six inches.

(2) Hospice care centers must provide a private space at least one hundred fifty square feet in size for every ten beds and an additional seventy-five square feet for every additional five beds. The private space should be designed for:

(a) Private group, family and individual interviews and counseling;

(b) Interdisciplinary weekly conferences and personnel, contractor, and volunteer breaks; and

(c) Spiritual services.

(3) Hospice care centers must provide additional space for personnel, contractors and volunteers. This space must be designed to accommodate:

(a) Secure storage for medical records;

(b) Personnel, contractor, and volunteer break areas;

(c) Personnel, contractor, and volunteer work areas;

(d) General storage; and

(e) At least one personnel, contractor, and volunteer toilet room with handwash sink.

(4) Hospice care centers must provide one visitor toilet room with handwash sink for every ten beds.

[Statutory Authority: Chapter 70.127 RCW. 02-18-026, § 246-335-275, filed 8/23/02, effective 10/1/02.]

FACILITY SUPPORT

WAC 246-335-280 Environmental services facilities. (1) The hospice care center must provide a waste handling area including storage area in a separate, well-ventilated area designed to maintain pest control and to preclude objectionable odors in other areas of the hospice care center, or in an outside, enclosed space with:

(a) A handwash sink located adjacent to the path of travel back into patient care areas;

(b) If planned, a waste container wash area with floor drain connected to a sanitary sewage system and hose bibs with hot and cold water;

(c) If planned, waste dumpsters and compactor storage area with drain connected to a sanitary sewage system and hose bibs with hot and cold water.

(2) The hospice care center must provide a locked housekeeping supply room on each floor with:

(a) A service sink or equivalent;

(b) Soap and towel dispenser;

(c) A mop rack storage area for mobile housekeeping equipment and supplies; and

(d) Storage for chemicals.

[Statutory Authority: Chapter 70.127 RCW. 02-18-026, § 246-335-280, filed 8/23/02, effective 10/1/02.]

WAC 246-335-285 Maintenance facilities. A hospice care center applicant or licensee must:

(1) If planning a maintenance shop, assure it is located and designed for easy delivery and removal of equipment and to minimize noise and dust to the rest of the hospice care center with:

(a) Storage for solvents, flammable and combustible liquids; and

(b) Storage for supplies and equipment; and

(2) Provide a separate room or area specifically for repair, and testing of electronic or other medical equipment according to the functional program.

[Statutory Authority: Chapter 70.127 RCW. 02-18-026, § 246-335-285, filed 8/23/02, effective 10/1/02.]

WAC 246-335-290 Receiving, storage and distribution facilities. A hospice care center applicant or licensee must:

(1) Provide bulk and general supply storage constructed to control pests, and prevent spoilage, contamination, damage, and corrosion of goods including:

(a) Protection against inclement weather;

(b) Secured spaces with appropriate environmental conditions in accordance with federal and state laws and rules on supplies and medication storage if pharmaceuticals are stored; and

(c) Off-floor storage when required to prevent contamination and water damage to stores;

(2) Provide receiving and unloading area with:

(a) Administrative work space;

(b) Security and protection for supplies; and

(c) Location to prevent vehicle exhaust from entering the hospice care center; and

(3) Provide storage if needed for:

(a) Flammable and combustible liquid storage;

(b) Laboratory chemicals;

(c) Medical compressed gases;

(d) Gaseous oxidizing materials;

(e) Pesticides, cleaning compounds, and toxic substances; and

(f) Mobile housekeeping equipment.

[Statutory Authority: Chapter 70.127 RCW. 02-18-026, § 246-335-290, filed 8/23/02, effective 10/1/02.]

EXEMPTIONS AND ALTERNATIVE METHODS

WAC 246-335-295 Exemptions and alternative methods. Hospice care centers applying for an exemption to any of the requirements of this chapter must comply with the requirements in WAC 246-335-125.

[Statutory Authority: Chapter 70.127 RCW. 02-18-026, § 246-335-295, filed 8/23/02, effective 10/1/02.]

PART 3
FEES

WAC 246-335-990 Fees. (1) A licensee or applicant shall submit to the department:

(a) An initial twelve-month license fee of two thousand one hundred sixty-two dollars for each service category for new persons not currently licensed in that category to provide in-home services in Washington state, or currently licensed businesses which have had statement of charges filed against them;

(b) A twenty-four month renewal fee based on the number of full-time equivalents (FTEs), which is a measurement based on a forty-hour week and is applicable to paid agency personnel or contractors, or the number of beds, as follows:

(c) For single service category licenses:

# of FTEs	Home Health	Hospice	Home Care	# of Beds	Hospice Care Center
5 or less	$2,162.00	$1,081.00	$649.00	5 or less	$720.00
6 to 15	$3,041.00	$1,138.00	$1,174.00	6 to 10	$1,442.00
16 to 50	$3,460.00	$1,694.00	$1,261.00	11 to 15	$2,162.00
51 to 100	$4,361.00	$2,713.00	$1,477.00	16 to 20	$2,883.00
101 or more	$4,491.00	$2,854.00	$1,586.00		

(d) For multiple service category licenses:

(i) One hundred percent of the home health category fee and seventy-five percent of the appropriate service category fee for each additional service category (hospice, home care, hospice care center); or

(ii) One hundred percent of the hospice category fee and seventy-five percent of the appropriate service category fee for each additional service category (home care, hospice care center); and

(e) A change of ownership fee of two hundred sixteen dollars for each licensed service category. A new license will be issued and valid for the remainder of the current license period.

(2) The department may charge and collect from a licensee a fee of one thousand eighty-one dollars for:

(a) A second on-site visit resulting from failure of the licensee to adequately respond to a statement of deficiencies:

(b) A complete on-site survey resulting from a substantiated complaint; or

(c) A follow-up compliance survey.

(3) A licensee with deemed status shall pay fees according to this section.

(4) A licensee shall submit an additional late fee in the amount of thirty-six dollars per day, not to exceed five hundred fifty dollars, from the renewal date (which is thirty days before the current license expiration date) until the date of mailing the fee, as evidenced by the postmark.

(5) Refunds. The department shall refund fees paid by the applicant for initial licensure as follows:

(a) If an application has been received but no on-site survey or technical assistance has been performed by the department, two-thirds of the fees paid, less a fifty dollar processing fee; or

(b) If an application has been received and an on-site survey or technical assistance has been performed by the department, one-third of the fees paid, less a fifty dollar processing fee.

(6) The department may not refund applicant fees if:

(a) The department has performed more than one on-site visit for any purpose;

(b) One year has elapsed since an initial licensure application is received by the department, but no license is issued because applicant failed to complete requirements for licensure; or

(c) The amount to be refunded as calculated by subsection (5)(a) or (b) of this section is ten dollars or less.

[Statutory Authority: RCW 43.70.250, 70.38.105, 18.46.030, 70.127.090, 43.70.040. 08-12-036, § 246-335-990, filed 5/30/08, effective 7/1/08. Statu-

tory Authority: RCW 43.70.250 and 70.127.090. 04-19-142, § 246-335-990, filed 9/22/04, effective 10/23/04. Statutory Authority: RCW 43.70.250 and 70.38.105(5). 03-22-020, § 246-335-990, filed 10/27/03, effective 11/27/03. Statutory Authority: Chapter 70.127 RCW. 02-18-026, § 246-335-990, filed 8/23/02, effective 10/1/02.]

Chapter 246-337 WAC
RESIDENTIAL TREATMENT FACILITY

WAC

246-337-001	Scope and purpose.
246-337-005	Definitions.
246-337-010	Initial licensure and renewal process.
246-337-015	Service categories.
246-337-020	Responsibilities and rights of the licensee and department.
246-337-025	Exemptions and alternative methods.
246-337-030	Retroactivity.
246-337-035	Procedures to deny, suspend, modify or revoke a license.
246-337-040	Review of construction documents and functional program.
246-337-045	Governance and administration.
246-337-050	Management of human resources.
246-337-055	Personnel criminal history, disclosure, and background inquiries.
246-337-060	Infection control.
246-337-065	Health and safety.
246-337-070	Emergency disaster plan.
246-337-075	Resident rights.
246-337-080	Resident care services.
246-337-085	Accepting a child with a parent in treatment.
246-337-090	Food and nutrition services.
246-337-095	Resident health care records.
246-337-100	Health care plan.
246-337-105	Medication management.
246-337-110	Use of seclusion and restraint.
246-337-115	Cleaning, maintenance and refuse disposal.
246-337-120	Facility, environment, and space requirements.
246-337-125	Toilet rooms and bathrooms.
246-337-130	Water supply, sewage and waste disposal.
246-337-135	Heating, ventilation and air conditioning.
246-337-140	Lighting, emergency lighting, and electrical outlets.
246-337-145	Laundry.
246-337-150	Resident rooms, furnishings and storage.
246-337-155	Pet management and safety.
246-337-990	Licensing fees.

WAC 246-337-001 Scope and purpose. (1) This chapter implements chapter 71.12 RCW and sets the minimum health and safety standards for licensure and operations of twenty-four hour private, county or municipal residential treatment facilities (RTF) providing health care services to persons with mental disorders or substance abuse.

(2) Additionally, these rules apply to residential treatment facilities licensed by the department of health under chapter 71.12 RCW and certified by the department of social and health services under chapter 71.05 RCW (Mental illness), chapter 70.96A RCW (Treatment for alcoholism, intoxication and drug addiction), and chapter 71.34 RCW (Mental health services for minors).

(3) These rules are intended to supplement other applicable federal, state and local laws, rules and ordinances. If any provision of this chapter is more restrictive than local codes and ordinances this chapter shall prevail over any less restrictive provision.

[Statutory Authority: Chapter 71.12 RCW. 05-15-157, § 246-337-001, filed 7/20/05, effective 8/20/05.]

WAC 246-337-005 Definitions. For the purpose of this chapter, the following words and phrases have the following meanings unless the context clearly indicates otherwise:

(1) **"Administrator"** means an individual person responsible for managing the day-to-day operations of the RTF.

(2) **"Adult"** means an individual age eighteen years or older.

(3) **"Approved"** means approved by the department, unless otherwise specified.

(4) **"Authorized"** means mandated or permitted, in writing, by the administrator to perform an act that is within a health care provider's lawful scope of practice, or that was lawfully delegated to the health care provider or to the unlicensed staff member.

(5) **"Bathroom"** means a room containing at least one bathtub or shower.

(6) **"Chemical dependency"** means alcoholism, drug addiction, or dependence on alcohol and one or more other psychoactive chemicals, as the context requires.

(7) **"Chemical dependency RTF"** means all or part of an RTF certified by DSHS under chapter 70.96A RCW, that provides twenty-four hour evaluation, stabilization and treatment services for persons with chemical dependency within one or more of the following service categories:

(a) **"Acute detoxification"** as defined in chapter 388-805 WAC;

(b) **"Subacute detoxification"** as defined in chapter 388-805 WAC;

(c) **"Intensive inpatient services"** as defined in chapter 388-805 WAC;

(d) **"Long-term treatment services"** as defined in chapter 388-805 WAC;

(e) **"Recovery house services"** as defined in chapter 388-805 WAC.

(8) **"Child"** or **"minor"** means an individual under the age of eighteen.

(9) **"Communicable disease"** means a disease caused by an infectious agent that can be transmitted from one person, animal, or object to another individual by direct or indirect means including transmission via an intermediate host or vector, food, water or air.

(10) **"Confidential"** means information that may not be disclosed except under specific conditions permitted or mandated by law or legal agreement between the parties concerned.

(11) **"Construction"** means:

(a) The erection of a facility;

(b) An addition, modification, alteration or change of an approved use to an existing facility; or

(c) The conversion of an existing facility or portion of a facility for use as a RTF.

(12) **"DASA"** means division of alcohol and substance abuse, within DSHS.

(13) **"Department"** means the Washington state department of health.

(14) **"DSHS"** means the Washington state department of social and health services.

(15) **"Emergency health care"** means services provided consistent with the health care needs of the resident for an acute illness, injury, or unexpected clinical event as determined by an authorized health care provider.

(16) **"Facility"** means a building or portion of a building.

(17) **"First aid"** means care for a condition that requires immediate assistance from an individual trained and certified in first-aid procedures.

(18) **"Hand hygiene"** means handwashing, antiseptic hand wash, or antiseptic hand or surgical hand antisepsis.

(19) **"Health"** means a state of complete physical and mental well-being and not merely the absence of disease or infirmity.

(20) **"Health assessment"** means a systematic examination of the person's body conducted by an authorized health care provider.

(21) **"Health care"** means any care, service, or procedure provided by a health care provider to diagnose, treat, or maintain a resident's physical or mental condition, or that affects the structure or function of the human body.

(22) **"Health care provider"** means an individual who is licensed, registered or certified under Title 18 RCW to provide health care within a particular profession's statutorily authorized scope of practice.

(23) **"Health care screen"** means the process approved by an authorized health care provider to determine the health care needs of a resident.

(24) **"Licensee"** means the person, corporation, association, organization, county, municipality, public hospital district, or other legal entity, including any lawful successors thereto to whom the department issues a RTF license.

(25) **"Medication"** means a legend drug prescribed for a resident by an authorized health care provider, or nonprescription drugs, also called "over-the-counter medications," that can be purchased by the general public without a prescription.

(26) **"Medication administration"** means the direct application of a medication or device by ingestion, inhalation, injection, or any other means, whether self-administered by a resident, or administered by a parent or guardian (for a minor), or an authorized health care provider.

(27) **"Medication self-administration"** or **"self-medication administration"** means a process by which each resident obtains his/her container of medication from a supervised and secure storage area, removes the dose needed and ingests or applies the medication as directed on the label while being observed by staff.

(28) **"Medication error"** includes any failure to administer or receive a medication according to an authorized health care provider's order, or according to the manufacturer's directions for nonprescription drugs.

(29) **"Medication protocol"** means a specific group of orders to be used for specific symptoms for specific residents and authorized by a health care provider.

(30) **"Mental health RTF"** means all or part of a RTF providing twenty-four hour evaluation, stabilization and treatment services for persons with a mental disorder and certified by DSHS under chapters 71.05 or 71.34 RCW, within one or more of the following service categories:

(a) **"Adult residential treatment"** as defined in chapter 388-865 WAC;

(b) **"Inpatient evaluation and treatment"** as defined in chapter 388-865 WAC;

(c) **"Child inpatient evaluation and treatment"** as defined in chapter 388-865 WAC.

(d) **"Child long-term inpatient treatment"** as defined in chapter 388-865 WAC.

(31) **"Parent"** means:

(a) A biological or adoptive parent who has legal custody of the child, including either parent if custody is shared under joint custody agreement; or

(b) An individual or agency judicially appointed as legal guardian or custodian of the child.

(32) **"Resident"** means an individual (adult or child) admitted to the RTF licensed under this chapter.

(33) **"Residential treatment facility"** or **"RTF"** means a facility for purposes of evaluation and treatment or evaluation and referral of any individual with a chemical dependency or mental disorder.

(34) **"Restraint"** means a continuum of methods used to prevent or limit free body movement.

(35) **"Room"** means a space set apart by floor to ceiling partitions on all sides with all openings provided with doors or windows.

(36) **"Seclusion"** means the involuntary confinement of a resident alone in a room or area from which the resident is physically prevented from leaving.

(37) **"Sink"** means a properly trapped plumbing fixture, capable of holding water, with approved potable hot and cold running water under pressure.

(38) **"Survey"** means an inspection or investigation conducted by the department to evaluate and monitor a licensee's compliance with chapter 71.12 RCW and this chapter.

(39) **"Toilet room"** means a room containing a water closet (toilet).

(40) **"WISHA"** means the state of Washington Industrial Safety and Health Act, chapter 49.17 RCW, administered by the Washington state department of labor and industries.

[Statutory Authority: Chapter 71.12 RCW. 05-15-157, § 246-337-005, filed 7/20/05, effective 8/20/05.]

WAC 246-337-010 Initial licensure and renewal process. (1) **Initial:** An applicant for an initial RTF license must submit to the department, sixty days or more before starting:

(a) A completed application on form(s) provided by the department, signed by the owner or legal designee, including:

(i) The identity of each officer and director, or their equivalent, of the licensee;

(ii) Disclosure statements and criminal history background checks obtained within three months of the application date for the administrator in accordance with chapter 43.43 RCW;

(iii) The license fee specified in WAC 246-337-990; and

(iv) A reduced floor plan on 8-1/2 x 11 size paper that shows each room within the facility in a manner that is easily seen and understood.

(b) Evidence of applicant's compliance with chapter 71.12 RCW and this chapter including:

(i) The department approved construction documents and functional program plan;

(ii) Documentation of application for certification by DSHS under chapter 71.05 RCW (Mental illness), chapter 70.96A RCW (Treatment for alcoholism, intoxication and

drug addiction), or chapter 71.34 RCW (Mental health services for minors);

(iii) Approval of the chief of the Washington state patrol, through the director of fire protection, as required by RCW 71.12.485 and chapter 212-12 WAC;

(iv) Compliance with all applicable federal, state and local laws, rules, and codes; and

(v) Completion of an initial on-site survey.

(c) Other information as required by the department.

(2) If the applicant has met all requirements for licensure set forth in subsection (1) of this section, the department shall issue a RTF license (listing the service categories). An RTF license is effective for one year from the date it is issued.

(3) **Renewal:** At least thirty days before the expiration date of the current license, the licensee must submit to the department:

(a) A completed application on form(s) provided by the department;

(b) Disclosure statements and criminal history background checks obtained within three months of the renewal date for the administrator in accordance with chapter 43.43 RCW;

(c) The fee specified in WAC 246-337-990;

(d) Documentation satisfactory to the department of licensee's compliance with chapter 71.12 RCW and this chapter, including the following:

(i) Compliance with rules adopted by the chief of the Washington state patrol, through the director of fire protection, as required by RCW 71.12.485 and chapter 212-12 WAC;

(ii) Compliance with all applicable federal, state and local laws, and rules; and

(e) Other information as required by the department.

(4) At least sixty days prior to changing any of the license service categories, number of resident beds, location or use of rooms as listed on the licensed room list, or the physical structure of the RTF, the licensee must:

(a) Notify the department in writing of the intended change;

(b) Request the department to determine the need for review by the department's construction review services; and

(c) If the change involves an approved increase in beds, the licensee must pay a fee under WAC 246-337-990;

(5) At least sixty days prior to selling, leasing, renting or otherwise transferring control of a license, that results in a change of the Uniform Business Identifier Number (UBI #), the licensee must submit to the department:

(a) The full name and address of the current licensee and prospective licensee;

(b) The name and address of the licensed RTF and the name under which the RTF will operate;

(c) Date of the proposed change;

(d) Plans for preserving resident records, consistent with WAC 246-337-095; and

(e) Other information required by the department.

(6) A prospective new RTF owner shall apply for licensure by complying with subsection (1) of this section.

(7) A RTF license is not transferable.

[Statutory Authority: Chapter 71.12 RCW. 05-15-157, § 246-337-010, filed 7/20/05, effective 8/20/05.]

WAC 246-337-015 Service categories. A licensee may provide services under a single RTF license for one or more of the following service categories:

(1) Chemical dependency acute detoxification;

(2) Chemical dependency subacute detoxification;

(3) Chemical dependency intensive inpatient;

(4) Chemical dependency long-term treatment;

(5) Chemical dependency recovery house;

(6) Mental health adult residential treatment (includes crisis services for twenty-four hours or more);

(7) Mental health inpatient evaluation and treatment;

(8) Mental health child long-term inpatient treatment;

(9) Mental health child inpatient evaluation and treatment.

[Statutory Authority: Chapter 71.12 RCW. 05-15-157, § 246-337-015, filed 7/20/05, effective 8/20/05.]

WAC 246-337-020 Responsibilities and rights of the licensee and department. (1) The licensee must:

(a) Comply with chapter 71.12 RCW and this chapter;

(b) Maintain and post in a conspicuous place on the premises:

(i) A current RTF license; and

(ii) The name, address and telephone number of the department, appropriate resident advocacy groups, and description of ombudsman services;

(c) Provide services limited to each service category that appears on the RTF license;

(d) Maintain the occupancy level at or below the licensed resident bed capacity of the RTF;

(e) Cooperate with the department during on-site surveys;

(f) Respond to a statement of deficiencies by submitting to the department:

(i) Within ten working days of receipt, a written plan of correction for each deficiency cited that includes a target date and is subject to approval by the department; and

(ii) A written progress report attesting to the final completion of the correction of deficiencies identified in the plan of correction.

(2) The department shall:

(a) Issue or renew a license when the applicant or licensee meets the requirements in chapter 71.12 RCW and this chapter;

(b) List, in writing, the service category(ies) the RTF is licensed to provide under this chapter;

(c) Verify compliance with RCW 71.12.485 and chapter 212-12 WAC administered by the Washington state patrol fire marshal fire protection service;

(d) Verify compliance with applicable state and local codes;

(3) The department may issue a single RTF license to include two or more RTF (campus), if the applicant or licensee:

(a) Meets the licensure requirements of chapter 71.12 RCW and this chapter; and

(b) Operates the multiple RTF as a single integrated system with:

(i) Governance by a single authority or body over all buildings;

(ii) All services provided by an integrated staff; and

(4) Conduct on-site surveys. After completing a survey, the department may:

(a) Give the administrator a written statement of deficiencies identifying failure to meet specific requirements of chapter 71.12 RCW and this chapter observed during an on-site survey;

(b) Obtain, review, and approve written plan of correction with dates to be completed;

(c) Review the progress report attesting to correction of deficiencies;

(d) Conduct a follow up on-site assessment at the discretion of the department;

(e) Document, during an initial survey or as needed, a department-approved room list identifying resident rooms, the dimensions and calculated square footage of each room, the number of approved resident beds, and other information related to the licensed resident bed capacity. This list will be kept as part of the RTF licensure file.

[Statutory Authority: Chapter 71.12 RCW. 05-15-157, § 246-337-020, filed 7/20/05, effective 8/20/05.]

WAC 246-337-025 Exemptions and alternative methods. (1) An applicant or licensee may request an exemption from any part of this chapter by submitting a written request to the department, including:

(a) The specific section, or sections, of rules for which the exemption is requested;

(b) An explanation of the circumstances involved;

(c) A proposed alternative that would ensure the safety and health of residents meeting the intent of the rule; and

(d) Any supporting research or other documentation.

(2) After review and consideration, the department may grant an exemption if the exemption does not:

(a) Negate the purpose and intent of these rules;

(b) Place the safety or health of the residents in the RTF in jeopardy;

(c) Reduce any fire and life safety or infection control laws or rules; or

(d) Adversely affect the structural integrity of a facility.

(3) The department will send a copy of the exemption decision to the licensee, and shall maintain the exemption as part of the current RTF file. The licensee shall maintain the documented exemption decision on file in the RTF.

[Statutory Authority: Chapter 71.12 RCW. 05-15-157, § 246-337-025, filed 7/20/05, effective 8/20/05.]

WAC 246-337-030 Retroactivity. Any construction on or after the effective date of this chapter must comply with this chapter. RTFs that are licensed and operating on the effective date of this chapter may continue to operate without modifications to the facility, unless specifically required under this chapter, or as deemed necessary by either the local building official, the department, other licensing regulators, the state fire marshal, for the general safety and welfare of the occupants and public.

[Statutory Authority: Chapter 71.12 RCW. 05-15-157, § 246-337-030, filed 7/20/05, effective 8/20/05.]

WAC 246-337-035 Procedures to deny, suspend, modify or revoke a license. (1) The department may deny, suspend, modify, or revoke a RTF facility license under chapters 71.12, 43.70, 34.05 RCW and 246-10 WAC, if the applicant or licensees have:

(a) Been denied a license to operate a health care, child care, group care or personal care facility in this state or elsewhere, had the license suspended or revoked, or been found civilly liable or criminally convicted of operating the facility without a license;

(b) Committed, aided or abetted an illegal act in connection with the operation of any RTF or the provision of health care or residential services;

(c) Abandoned, abused, neglected, assaulted, or demonstrated indifference to the welfare and well-being of a resident;

(d) Failed to take immediate corrective action in any instance of assault, abuse, neglect, or indifference to the welfare of a resident;

(e) Retaliated against a staff member, resident or other individual for reporting suspected abuse or other alleged improprieties;

(f) Failed to comply with any of the provisions of chapter 71.12 RCW or this chapter; or

(g) Failed to meet DSHS certification standards under chapters 71.05, 70.96A and 71.34 RCW.

(2) An applicant or licensee may contest a disciplinary decision or action of the department under RCW 43.70.115, chapters 34.05 RCW and 246-10 WAC.

(3) The department may summarily suspend a license pending a proceeding for revocation or other action if the department determines a deficiency is an imminent threat to a resident's health, safety, or welfare.

(4) In addition to any other rights allowed under applicable law, the department may address violations by an applicant or a licensee of chapter 71.12 RCW or this chapter by:

(a) Offering a plan of correction if the department determines that identified deficiencies are not major, broadly systemic, or of a recurring nature. Under this chapter, a "plan of correction" is a proposal devised by the applicant or licensee and approved by the department, that includes specific corrective actions that must be taken to correct identified deficiencies and a time frame in which to complete them. Implementation is required within the approved time frame, and is subject to verification by the department;

(b) Offering a directed plan of correction if the department determines that identified deficiencies are broadly systemic, recurring, or of a significant threat to public health and safety. Under this chapter, a "directed plan of correction" is a plan of correction based on a statement of deficiencies, and includes specific corrective actions that must be taken and a time frame in which to complete them. Under this chapter, a "statement of deficiencies" is a survey or investigation report completed by the department identifying one or more deficiencies. The final content of the directed plan of correction will be reached during meetings between the department and the licensee, following an initial statement of general requirements by the department. Timelines will be reduced to the minimum necessary, even prior to formalization of the directed plan of correction, to redress problems;

(c) Initiating administrative action, under chapter 34.05 RCW, RCW 43.70.115 and chapter 246-10 WAC, either as the department's primary alternative, or in the event the

department requires corrective action under (a) or (b) of this subsection, and the applicant or licensee fails to correct identified deficiencies to the department's satisfaction within the approved time frame; and/or

(d) Taking administrative action initiated under chapter 34.05 RCW:

(i) An administrative action may result in a hearing before a presiding officer and the issuance of formal findings and a directed order;

(ii) The administrative action and any resulting order constitute formal action under the provisions of chapter 34.05 RCW.

[Statutory Authority: Chapter 71.12 RCW. 05-15-157, § 246-337-035, filed 7/20/05, effective 8/20/05.]

WAC 246-337-040 Review of construction documents and functional program. (1) Prior to beginning any construction or remodeling, the applicant or licensee must submit an application and fee, if applicable, to the department and receive written authorization by the department to proceed.

(2) The licensee or applicant must submit a written functional program, in accordance with RCW 71.12.470, outlining the service categories and types of residents to be served and how the needs of the residents will be met including, but not limited to:

(a) Program goals;

(b) Staffing and health care to be provided;

(c) Infection control;

(d) Security and safety;

(e) Seclusion and restraint;

(f) Laundry;

(g) Food and nutrition; and

(h) Medication.

(3) The licensee or applicant must submit accurate, timely, and complete construction documents that comply with all governing rules.

(4) Construction documents must include:

(a) Drawings prepared, stamped, and signed by an architect licensed by the state of Washington under chapter 18.08 RCW. The services of a consulting engineer licensed by the state of Washington may be used for the various branches of the work, if appropriate; and

(b) Drawings with coordinated architectural, mechanical, and electrical work drawn to scale showing complete details for construction, including:

(i) Site plan(s) showing streets, driveways, parking, vehicle and pedestrian circulation, utility line locations, and location of existing and new buildings;

(ii) Dimensioned floor plan(s) with the function of each room and fixed/required equipment designated;

(iii) Elevations, sections, and construction details;

(iv) Schedule of floor, wall, and ceiling finishes;

(v) Schedules of doors and windows - sizes and type, and door finish hardware;

(vi) Mechanical systems - plumbing and heating/venting/air conditioning; and

(vii) Electrical systems, including lighting, power, and communication/notification systems;

(c) Specifications that describe with specificity the workmanship and finishes; and

(d) Shop drawings and related equipment specifications for:

(i) An automatic fire sprinkler system when required by other codes; and

(ii) An automatic fire alarm system when required by other codes.

(5) A license may not be issued for a new RTF, a new facility within an RTF, or changes in resident bed capacity or licensed service category(ies) for a currently licensed RTF, without written approval from the department's construction review services unit and residential care services program.

(6) The applicant or licensee must:

(a) Comply with the standards as adopted by the Washington state building code council;

(b) Assure conformance to the approved plans during construction;

(c) Submit addenda, change orders, construction change directives or any other deviation from the approved plans prior to their installation;

(d) Provide a written construction project completion notice to the department indicating:

(i) The completion date; and

(ii) The actual construction cost;

(e) Make adequate provisions for the health, safety, and comfort of residents during construction projects.

[Statutory Authority: Chapter 71.12 RCW. 05-15-157, § 246-337-040, filed 7/20/05, effective 8/20/05.]

WAC 246-337-045 Governance and administration. The licensee must establish a governing body with responsibility for operating and maintaining the RTF. The governing body must provide organizational guidance and oversight to ensure that resources support and staff provides safe and adequate resident care including, but not limited to:

(1) Adopting, periodically reviewing, and updating as necessary, policies that:

(a) Govern the organization and functions of the RTF including:

(i) A brief narrative explaining the scope of services provided;

(ii) An organization chart specifying the governing body, staff positions, and number of full- or part-time persons for each position; and

(iii) A policy addressing that sufficient resources such as personnel, facilities, equipment, and supplies are provided to meet the needs of the population served;

(b) Provide a process for communication and conflict resolution for both staff and residents; and

(c) Provide clear lines of authority for both management and operation of the RTF.

(2) Establishing procedures for selecting and periodically evaluating a qualified administrator to assure that he or she carries out the goals and policies of the governing body. The administrator must:

(a) Be qualified through appropriate knowledge, experience and capabilities to supervise and administer the services properly;

(b) Be available, or assure that a designated alternate who has similar qualifications is available, one hundred percent of the time, either in person, by telephone or electronic

pager (or similar electronic means), to carry out the goals, objectives and standards of the governing body.

(3) Establishing written policies and procedures that implement all applicable rules, which are routinely reviewed by the administrator and the governing body to ensure they are kept current, made known to staff, made available at all times to all staff, and are complied with within the RTF.

(4) Establishing a personnel system that assures:

(a) Personnel records of all employees and volunteers contain written job descriptions consistent with staff responsibilities and standards for professional licensing;

(b) Staff are assigned, oriented, trained, supervised, monitored, and evaluated;

(c) Staff who provide direct resident care, direct treatment, or manage the safety of a resident are competent by training, experience and capability;

(d) Contractors have current contracts on file clearly stating the responsibilities of the contractor;

(e) Staff with unsupervised access to residents complies with WAC 246-337-055.

(5) Establishing a RTF-wide approach to a coordinated quality improvement program for resident care services under chapter 71.12 RCW addressing health and safety.

[Statutory Authority: Chapter 71.12 RCW. 05-15-157, § 246-337-045, filed 7/20/05, effective 8/20/05.]

WAC 246-337-050 Management of human resources. The licensee must ensure residents receive health care by adequate numbers of staff authorized and competent to carry out assigned responsibilities, including:

(1) A sufficient number of personnel must be present on a twenty-four hour per day basis to meet the health care needs of the residents served; managing emergency situations; crisis intervention, implementation of health care plans; and required monitoring activities.

(2) Personnel trained, authorized and credentialed (where applicable) to carry out assigned job responsibilities consistent with scopes of practice, resident population characteristics and the resident's individual plan of care/treatment;

(3) The presence of at least one individual trained in basic first aid and age appropriate cardiopulmonary resuscitation twenty-four hours per day.

(4) Written documentation to verify credentials, training, and performance evaluations for each staff member including, but not limited to:

(a) Employment application/hire date;

(b) Verification of education, experience and training;

(c) Current job description;

(d) Criminal disclosure statement and results of a Washington state patrol background inquiry;

(e) HIV/AIDS training or verification;

(f) Current license/certification/registration (if applicable);

(g) Current basic first aid and age appropriate cardiopulmonary resuscitation training (if applicable);

(h) Current food and beverage service worker permit (if applicable);

(i) Current driver's license (if applicable);

(j) Tuberculosis screening (refer to WAC 246-337-060);

(k) Performance evaluation(s);

(l) Staff using restraint and seclusion procedures must receive initial and ongoing education and training in the proper and safe use of seclusion and/or restraints;

(m) Initial orientation and ongoing training to address the safety and health care needs of the population served.

(5) If independent contractors, consultants, students, volunteers and trainees are providing direct on-site residential care, the licensee must ensure their compliance with this section.

[Statutory Authority: Chapter 71.12 RCW. 05-15-157, § 246-337-050, filed 7/20/05, effective 8/20/05.]

WAC 246-337-055 Personnel criminal history, disclosure, and background inquiries. The licensee must ensure that all staff, independent contractors, consultants, students, volunteers and trainees with unsupervised access to residents are screened for criminal history disclosure and background requirements consistent with RCW 43.43.830 through 43.43.842.

[Statutory Authority: Chapter 71.12 RCW. 05-15-157, § 246-337-055, filed 7/20/05, effective 8/20/05.]

WAC 246-337-060 Infection control. The licensee must ensure each resident's care is provided in an environment that prevents the transmission of infections and communicable disease among residents, staff, and visitors including:

(1) Implementing and maintaining an infection control program by assignment of responsibility for infection control and monitoring to a specified staff member.

(2) Maintaining an infection control program that includes adoption and implementation of written policies and procedures for:

(a) Meeting the standards as outlined in the most recent edition of the department's *Human Immune Deficiency Virus (HIV) and Acquired Immune Deficiency Syndrome (AIDS) Curriculum Manual*, including;

(i) Hand hygiene;

(ii) Disinfection;

(iii) Standard/universal precautions;

(b) Residents with poor hygiene;

(c) Control of bloodborne pathogens in accordance with WISHA, chapter 296-823 WAC;

(d) Control of tuberculosis consistent with WISHA, department guidelines, and chapter 246-170 WAC;

(e) Exclusion of staff from work who have a communicable disease in an infectious stage; and

(f) Environmental management and housekeeping functions.

(3) Ensuring that staff report notifiable conditions and cooperate with public health authorities to facilitate investigation of a case, suspected case, or outbreak of a notifiable condition, consistent with chapter 246-101 WAC.

(4) Providing the equipment necessary to implement the RTF infection control policies and procedures.

(5) Complying with chapter 246-100 WAC "Communicable and certain other diseases."

[Statutory Authority: Chapter 71.12 RCW. 05-15-157, § 246-337-060, filed 7/20/05, effective 8/20/05.]

WAC 246-337-065 Health and safety. The licensee must protect resident health and safety by developing written policies and procedures that are consistent with the requirements of this chapter, and address:

(1) Coordination of interagency and intra-agency services, if any, to meet and provide for resident health care needs.

(2) The provision of health care services.

(3) The provision for transportation for residents in accordance with Washington state laws and rules governing transportation.

(4) Smoking policies and procedures in compliance with applicable Washington state laws and rules.

(5) Security to protect residents, visitors, staff and property including, but not limited to:

(a) Controlling access to and egress (elopement and evacuation) from the RTF; and

(b) Investigating, and recording all security incidents.

(6) Reporting to the department serious or undesirable resident outcomes including, but not limited to, death, suicide, or major disruption of services through internal or external emergency events.

[Statutory Authority: Chapter 71.12 RCW. 05-15-157, § 246-337-065, filed 7/20/05, effective 8/20/05.]

WAC 246-337-070 Emergency disaster plan. (1) The licensee must ensure resident health and safety by establishing and implementing an emergency plan designed for response to internal and external emergency safety situations. The emergency plan must:

(a) Be specific to the RTF, and each building that comprises the RTF;

(b) Be communicated to the residents and staff;

(c) Be coordinated with local emergency plans;

(d) Address actions the licensee will take if residents cannot return to the facility;

(e) Be posted or readily available to all staff and residents; and

(f) Require emergency phone numbers to be adjacent to appropriate phones.

(2) The emergency plan must identify:

(a) Who is responsible for each aspect of the plan;

(b) Procedures for accounting for all residents and staff during and after the emergency;

(c) How the premises will be evacuated, if necessary, and the meeting location after evacuation;

(d) How to address care of residents with special needs during and after an emergency;

(e) Provisions for emergency medications, food, water, clothing, shelter, heat and power;

(f) How family members will be contacted; and

(g) Transportation arrangements if necessary.

(3) The licensee must evaluate the effectiveness of the emergency plan, including:

(a) Review at least annually and revise as needed;

(b) Conduct and document, at least annually, emergency drills for residents and staff; and

(c) Debrief and evaluate the plan after each emergency incident or drill.

(4) Supplies and first-aid equipment must be:

(a) In a designated location;

(b) Readily available to staff during all hours of operation including during transportation of residents;

(c) Sufficient in type and quantity according to staff and residents' needs; and

(d) Sufficient to maintain a three-day emergency supply of dry or canned food and water for all staff and residents.

[Statutory Authority: Chapter 71.12 RCW. 05-15-157, § 246-337-070, filed 7/20/05, effective 8/20/05.]

WAC 246-337-075 Resident rights. The licensee must establish a process to ensure resident rights are protected in compliance with chapter 71.12 RCW, this chapter, and with chapters 70.96A, 71.05, and/or 71.34 RCW, as applicable, depending on the service categories that are part of the RTF license. This process must address, at a minimum, how the RTF will:

(1) Inform each resident in an understandable manner, his or her personal representative, designee or parent, of all rights, treatment methods, and rules applicable to the proposed health care of a particular resident.

(2) Document that each resident received a written copy of his or her rights on or before admission.

(3) Address use of emergency interventions such as use of youth behavior management guidelines, restraint and/or seclusion, the use of special treatment interventions, restriction of rights and parameters of confidentiality.

(4) Allow residents, their personal representatives, and parents, to review resident files in accordance with chapter 70.02 RCW.

(5) Ensure that each resident is treated in a manner that respects individual identity, human dignity and fosters constructive self-esteem by ensuring each resident has the right to:

(a) Be free of abuse, including being deprived of food, clothes or other basic necessities;

(b) Be free of restraint and/or seclusion, except as provided in WAC 246-337-110;

(c) Participate or abstain from social and religious activities;

(d) Participate in planning his or her own health care and treatment that considers their own medical and/or mental health advance directives;

(e) Refuse to perform services for the benefit of the RTF unless agreed to by the resident, as a part of the individual health care plan and in accordance with applicable law;

(f) Inform each resident of the cost of treatment;

(g) Inform each resident in writing of the department contact information, including telephone number and mailing address;

(h) Inform each resident that the resident may file a complaint with the department regarding the RTF's noncompliance with any part of this chapter, without interference, discrimination or reprisal. The resident may choose whether to notify the RTF of the complaint;

(i) Promote a healthy, safe, clean and comfortable environment;

(j) Protect each resident from invasion of privacy: Provided that reasonable means may be used to detect or prevent items that may be harmful or injurious to the resident or others, from being possessed or used on the premises.

(6) Protect the confidentiality of treatment and personal information when communicating with individuals not associated or listed in the resident individual's treatment plan or confidentiality disclosure form.

(7) Comply with reporting requirements of suspected incidents of child or adult abuse and neglect in accordance with chapters 26.44 and 74.34 RCW.

(8) Account for each resident's assets, including allowance, earnings from federal or state sources and expenditures.

(9) Assist each resident, upon request, in sending written communications of the fact of the resident's commitment in the RTF to friends, relatives, or other persons.

[Statutory Authority: Chapter 71.12 RCW. 05-15-157, § 246-337-075, filed 7/20/05, effective 8/20/05.]

WAC 246-337-080 Resident care services. (1) **Policies and procedures:** The licensee must establish and implement policies and procedures that describe how residents are provided care and personal equipment to meet their health care needs including:

(a) Admission, transfer, discharge and referral process.

(b) Addressing how the licensee provides or makes provision for health care services.

(c) Addressing the action of RTF personnel when medical emergencies or a threat to life arises when a physician or authorized health care provider is not present including:

(i) Having current policies and procedures signed by a physician or authorized health care provider, reviewed as needed and at least biennially;

(ii) How resident medical and related data shall be transmitted in the event of a transfer;

(iii) Need for the notification of legal guardian or next of kin, the department or other regulatory agencies in the event of a serious change in the resident's condition, transfer of a resident to another facility, elopement, death, or when unusual circumstances occur; and

(iv) When to consult with internal or external resource agencies or persons e.g., poison control, fire department and police.

(d) Addressing how the RTF must provide for each resident's need for personal care items and durable medical equipment.

(e) Addressing provisions for transfer and appropriate prenatal and postnatal care services for pregnant residents.

(f) Addressing how a licensee providing twenty-four hours per day nursing service functions provides systems for supervision, assessment and delegation in accordance with applicable statute and rules including chapter 18.79 RCW, Nursing care.

(g) Addressing how a licensee providing acute detoxification services must ensure resident health and safety including:

(i) A licensed nurse must be on-site when a resident is receiving acute detoxification services;

(ii) Registered nurse responsible for supervising resident care nursing services shall be on-site at least four hours per week and available on-call to the licensed practical nurse; and

(iii) Policies and procedures for acute detoxification services approved by an authorized health care provider.

(h) Addressing how licensees providing subacute detoxification services must ensure resident health and safety, including:

(i) Implementing policies and procedures establishing agreements with authorized health care providers or hospitals that includes:

(A) Criteria for determining the degree of medical stability of a potential resident in a subacute detoxification facility;

(B) Monitoring the resident after being admitted;

(C) Reporting abnormal symptoms according to established criteria;

(D) Criteria requiring immediate transfer to a hospital; and

(E) Resident discharge or transfer criteria;

(ii) Monitoring of residents by a staff including observing a resident for signs and symptoms of illness or trauma; and

(iii) Observing the resident to self-administer his or her own medication as prescribed by the resident's health care provider.

(2) **Delivery of resident care services:** The licensee must ensure the provision of or for that resident care services to meet the health care needs of the resident including:

(a) Admission is limited to residents for whom a facility is qualified by staff, services, equipment, building design and occupancy to give safe care.

(b) A health care screen of each resident that is to be conducted upon admission and updated as changes occur or when additional health care needs are identified.

(c) A completed comprehensive health assessment and medical history that is to be conducted by a health care provider following admission to an RTF, unless a current comprehensive health assessment or review was performed and is available upon admission to an RTF providing mental health or acute detoxification services.

(d) A health assessment by a health care provider, any time a resident exhibits signs and symptoms of an injury, illness or abnormality for which medical diagnosis and treatment are indicated.

(e) Access to and availability of authorized health care providers to develop and implement the resident plan of care.

(f) Sufficient numbers of trained personnel who are available to provide health care according to the resident's health care plan.

(g) Provision for or access by referral to health care for residents admitted to the RTF including, but not limited to:

(i) Assisting residents in following all prescribed treatments, modified diets, activities or activity limitations.

(ii) Assisting residents to keep health care appointments.

(iii) Medication administration or observing the resident self-administer his or her own medication as prescribed by the resident's authorized health care provider.

(iv) Incorporating resident's health care needs and behavioral needs into the resident's overall health care plan;

(v) Emergency health care.

(h) Provision for twenty-four hours per day nursing service functions to include availability by phone; when the RTF provides mental health inpatient evaluation and treatment, mental health adult residential treatment, mental health child long-term inpatient treatment, mental health child inpa-

tient evaluation and treatment, and/or chemical dependency acute detoxification.

(i) Provision is made either on the premises, through a contract laboratory or through a health care provider for service(s) required by the resident.

(j) Storing and labeling each resident's personal care items separately preventing contamination and access by other residents.

(3) **Documentation:** The licensee must ensure documentation of health care received or provided in the resident's health care record.

[Statutory Authority: Chapter 71.12 RCW. 05-15-157, § 246-337-080, filed 7/20/05, effective 8/20/05.]

WAC 246-337-085 Accepting a child with a parent in treatment. A chemical dependency facility that accepts a child with a parent in treatment must assure child care services are provided for the child and the services of a health care provider who is responsible for developing health care policies, provides consultation and monitors the child's health care. The facility shall:

(1) Operate or arrange for child care licensed by DSHS under chapter 388-295 WAC, Minimum licensing requirements for child day care centers, chapter 388-151 WAC, School-age child care center minimum licensing requirements, chapter 388-155 WAC, Minimum licensing requirements for family child day care homes which the children will attend during treatment hours of the parent;

(2) Allow an infant under one month of age to be cared for by the staff of the RTF to supplement care by the mother;

(3) Allow the parent to be responsible for the care of his/her own child during the hours the parent is not in treatment, with the following conditions:

(a) The parent's management of the child is subject to the policies and procedures of the RTF;

(b) A parent may designate another resident to care for a child, if the designation is in writing and includes:

(i) A specified time period;

(ii) Any special instructions; and

(iii) Is signed by the parent, designee and staff member who approves of the designation;

(4) Establish policies and procedures addressing the chronological and developmental needs of the children to be accepted;

(5) Obtain a health history for each child following admission;

(6) Develop with the parent a plan of care for each child that addresses the child's health care needs including medications.

[Statutory Authority: Chapter 71.12 RCW. 05-15-157, § 246-337-085, filed 7/20/05, effective 8/20/05.]

WAC 246-337-090 Food and nutrition services. The licensee must ensure that nutritionally adequate and appetizing meals that meet resident needs are stored, prepared and served in accordance with chapter 246-215 WAC.

(1) The licensee shall provide:

(a) Food and dietary services managed by a person knowledgeable in food services, and, when needed, consultative services provided by a registered dietician;

(b) Food and water daily, supplying at least one hundred percent of the current nationally recommended dietary allowance for meals and snacks, adjusted for:

(i) Age, gender, development, activities and health conditions; and

(ii) Reasonable accommodations for cultural and religious preferences.

(2) The licensee shall provide at least three meals at regular intervals without more than fourteen hours between the last meal of the day and the first meal of the next day.

(3) If modified food plans are needed for residents receiving detoxification services or who have other nutritional needs, the licensee must:

(a) Provide modified diets, nutrient supplements and concentrates to residents as prescribed by an authorized health care provider;

(b) Limit modified meal content or frequency to no more than forty-eight hours without an authorized health care provider's orders; and

(c) Notify staff of any resident with food allergies or other medical conditions, symptoms of allergic reactions to watch for, and emergency measures to take if they occur.

(4) The licensee must allow sufficient time for residents to consume meals.

(5) The licensee must designate at least one individual having a current food and beverage service worker's permit to monitor and oversee food handling at the RTF; and require that all residents who do not have food and beverage worker permits, but have been medically screened and cleared to work in the kitchen, be oriented and supervised by staff with current food and beverage worker permits at all times when working in the kitchen.

(6) Menus must be dated, available and conspicuously posted one week or more in advance. The licensee must:

(a) Keep records of all food served, and substitutions;

(b) Retain menu records of food served for at least three months.

(7) All food must be prepared on-site unless the licensee has a signed contract or agreement with a food establishment.

(8) Each licensee must keep on file:

(a) A description of how food will be handled, prepared and stored; and

(b) A written plan of action should food be in an unacceptable condition.

(9) Staff must follow manufacturer's instructions in operating kitchen equipment.

(10) A licensed RTF with sixteen or fewer residents may use domestic or home-type kitchen appliances.

(11) An RTF with more than sixteen residents must use commercial appliances.

[Statutory Authority: Chapter 71.12 RCW. 05-15-157, § 246-337-090, filed 7/20/05, effective 8/20/05.]

WAC 246-337-095 Resident health care records. The licensee must ensure the RTF meets the following requirements:

(1) Develop and implement procedures for maintaining current health care records as required by chapter 70.02 RCW and RCW 71.05.390 or by applicable laws.

(2) Make health care records accessible for review by appropriate direct care staff, the resident and the department in accordance with applicable law.

(3) Ensure health care records are legibly written or retrievable by electronic means.

(4) Document medical information on the licensee's standardized forms.

(5) Record health care information by the health care provider or direct care staff with resident contact to include typed or legible handwriting in blue or black ink, verified by signature or unique identifier, title, date and time.

(6) Maintain the confidentiality and security of health care records in accordance with applicable law.

(7) Maintain health care records in chronological order in their entirety or chronological by sections.

(8) Keep health care records current with all documents filed according to the licensee's written timeline policy.

(9) Inclusion of the following, at a minimum, in each record:

(a) Resident's name, age, sex, marital status, date of admission, voluntary or other commitment, name of physician, diagnosis, date of discharge, previous address and phone number, if any;

(b) Resident's receipt of notification of resident's rights and responsibilities, if applicable;

(c) Resident's consent for health care provided by the RTF;

(d) A copy of any authorizations, advance directives, powers of attorney, letters of guardianship, or other similar documentation provided by the resident;

(e) Original reports, where available or, if not available, durable, legible copies of original reports on all tests, procedures, and examinations performed on the resident;

(f) Health assessments;

(g) Health care plan, including the names, relationship to the resident and addresses of those individuals the resident states with whom the RTF may freely communicate regarding the health care of the resident without violating the resident's right to confidentiality or privacy of health care information;

(h) Dated and signed (or initialed) notes describing health care provided for each contact with the resident pertinent to the resident's health care plan including, but not limited to:

(i) Physical and psychosocial history;

(ii) Medication administration, medical/nursing services, and treatment provided, resident's response to treatment and any adverse reactions and resolution of medical issues;

(iii) Use of restraint or seclusion consistent with WAC 246-337-110;

(iv) Instructions or teaching provided to resident in connection with his or her health care; and

(v) Discharge summary, including:

(A) Concise review of resident's physical and mental history, as applicable;

(B) Condition upon discharge;

(C) Recommendations for services, follow-up or continuing care; and

(D) Date and time of discharge.

(10) Retaining the health care records at least six years beyond resident's discharge or death date, whichever occurs sooner, and at least six years beyond the age of eighteen.

(11) Destroying the health care records in accordance with applicable law and in a manner that preserves confidentiality.

[Statutory Authority: Chapter 71.12 RCW. 05-15-157, § 246-337-095, filed 7/20/05, effective 8/20/05.]

WAC 246-337-100 Health care plan. The licensee must ensure that an individual health care plan is developed and implemented for each resident based on health assessment(s) on admission and updated as additional needs are identified during treatment that includes the following:

(1) The health care plan must be prepared by one or more staff involved in the resident's care with participation by the resident and by either his or her legal representative or parent when minors are involved;

(2) An initial or provisional health care plan addressing the health care needs of the resident on admission to a RTF;

(3) A discharge (aftercare) health care plan if the resident will require less than a fourteen-day treatment, if appropriate; and

(4) A comprehensive health care plan developed by participants providing health care to the resident addressing and including, but not limited to:

(a) Health care needs;

(b) Implementation, modification and review of health care needs documented in the health care plan and health care record;

(c) Needs of a mother and child during pregnancy and after delivery, if applicable;

(d) Work assignments given to residents as part of their health care plan, if applicable; and

(e) Discharge health care needs.

[Statutory Authority: Chapter 71.12 RCW. 05-15-157, § 246-337-100, filed 7/20/05, effective 8/20/05.]

WAC 246-337-105 Medication management. The licensee is responsible for the control and use of all medications within the RTF, including:

(1) Ensuring policies and procedures and medication protocols are developed, approved, reviewed and implemented by licensed health care providers, administration and pharmacist (as needed). The policies and procedures must be consistent with the rules of the department and the department's board of pharmacy and address all aspects of medication administration, including the following:

(a) Timely procurement;

(b) Medication administration;

(c) Prescribing;

(d) Proper storage conditions addressing security, safety, sanitation, temperature, light, moisture and ventilation;

(e) Use of nonprescription drugs:

(i) List of drugs available;

(ii) Parameters of use;

(f) Receipt;

(g) Proper labeling;

(h) Disposal;

(i) Medication brought into RTF by a resident;

(j) Accountability;

(k) Starter supply of psychotropic, detoxification and emergency drugs not for a specific resident;

(l) Emergency allergy response kit of prepackaged medications and supplies for the treatment of anaphylactic shock; and

(m) Medications for short term authorized absence (pass) from the RTF, where applicable.

(2) Establishing and maintaining of an organized system that ensures accuracy in receiving, transcribing and implementing policies and procedures for medication administration, including ensuring residents receive the correct medication, dosage, route, time, and reason.

(3) Documentation of all medications administered or self-administered, including the following data:

(a) Name and dosage of medication;

(b) Start/stop date;

(c) Time;

(d) Route;

(e) Staff or resident initials indicating medication was administered, self-administered or issued;

(f) Notation if medication was refused, held, wasted or not administered or self-administered;

(g) Allergies;

(h) Resident response to medication when given as necessary or as needed (PRN);

(i) Medical staff notification of errors, adverse effects, side effects; and

(j) Within established parameters for nonprescription drugs.

(4) Ensuring written orders are signed by an authorized health care provider with prescriptive authority for all legend drugs and vaccines. Verbal orders for legend drugs and vaccines must be signed by the prescriber as soon as possible, but no later than seven days after the verbal order.

(5) Ensuring use of nonprescription drugs that are self-administered are:

(a) Within parameters established for nonprescription drugs; and

(b) According to established list.

(6) Having a current established drug reference resource available for use by RTF staff.

[Statutory Authority: Chapter 71.12 RCW. 05-15-157, § 246-337-105, filed 7/20/05, effective 8/20/05.]

WAC 246-337-110 Use of seclusion and restraint. Any RTF that utilizes restraint or seclusion must ensure that restraint or seclusion is performed in compliance with chapters 70.96A, 71.05, 71.34 RCW, this chapter, and other applicable federal and state laws and rules. Restraint and seclusion must be performed in a manner that is safe, proportionate and appropriate to the severity of the behavior, the resident's chronological and developmental age, size, gender, physical, medical and psychiatric condition, and personal history.

(1) The licensee may use seclusion or restraint only in emergency situations needed to ensure the physical safety of the individual resident or other residents or staff of the facility, and when less restrictive measures have been found to be ineffective to protect the resident or others from harm.

(2) Seclusion and restraint procedures must be implemented in the least restrictive manner possible in accordance with a written modification to the resident's health care plan and discontinued when the behaviors that necessitated the restraint or seclusion are no longer in evidence.

(3) "Whenever needed" or "as needed" (PRN) orders for use of seclusion or restraint are prohibited.

(4) A physician or other authorized health care provider must authorize use of the restraint or seclusion within one hour of initiating the restraint or seclusion.

(5) Each order of restraint or seclusion is limited in length of time to:

(a) **Adults:** Four hours;

(b) **Children and adolescents ages nine to seventeen:** Two hours; and

(c) **Children under nine years of age:** One hour.

(6) A physician or an authorized health care provider, authorized by the licensee, may only renew the original order in accordance with these limits for up to a total of twenty-four hours.

(7) A physician or an authorized health care provider must examine the resident, before the restraint or seclusion exceeds more than twenty-four hours. This procedure must be repeated for each subsequent twenty-four hour period of restraint or seclusion.

(8) Within one hour of initiation of restraint or seclusion, an authorized health care provider must conduct a face-to-face assessment of the physical and psychological well-being of the resident.

(9) The resident's clinical record must include the following documentation should restraint or seclusion be used:

(a) Order for the restraint or seclusion including name of the physician or authorized health care provider authorizing restraint or seclusion;

(b) Date/time order obtained;

(c) The specific intervention ordered including length of time and behavior that would terminate the intervention;

(d) Time restraint or seclusion began and ended;

(e) Time and results of one hour assessment;

(f) Resident behavior prior to initiation of restraint or seclusion;

(g) Any injuries sustained during the restraint or seclusion; and

(h) Post intervention debriefing with resident to discuss precipitating factors leading to the need for intervention.

(10) Safety health checks must be conducted and documented at a minimum of every fifteen minutes, to include:

(a) Behavior;

(b) Food/nutrition offered;

(c) Toileting; and

(d) Physical condition.

(11) Staff shall continuously observe and monitor residents in seclusion or restraint by an assigned staff member (face-to-face) or by staff using both video and audio equipment.

(12) Staff involved in the restraint or seclusion will debrief and address effectiveness and safety issues.

(13) The licensee must ensure that restraint and seclusion is carried out in a safe environment. This room must:

(a) Be designed to minimize potential for stimulation, escape, hiding, injury, or death;

(b) Have a maximum capacity of one resident;

(c) Have a door that opens outward;

(d) Have a staff-controlled, lockable, adjoining toilet room;

(e) Have a minimum of three feet of clear space on three sides of the bed; and

(f) Have negative pressure with an independent exhaust system with the exhaust fan at the discharge end of the system.

(14) Restraint equipment must be clean and in good repair.

[Statutory Authority: Chapter 71.12 RCW. 05-15-157, § 246-337-110, filed 7/20/05, effective 8/20/05.]

WAC 246-337-115 Cleaning, maintenance and refuse disposal. The licensee must ensure that the RTF, equipment and furnishings are safe, sanitary, and maintained in good repair. The RTF shall provide for:

(1) Sanitary disposal and collection of garbage and refuse, by including:

(a) Use of noncombustible waste containers in resident rooms and common use areas;

(b) Containers constructed of nonabsorbent material, which are water-tight, covered, and adequate to store garbage and refuse generated by the RTF;

(c) A storage area location convenient for resident and staff use;

(d) An area and containers that are cleaned and maintained to prevent:

(i) Entrance of insects, rodents, birds, or other pests;

(ii) Odors; and

(iii) Other nuisances.

(2) Management of biohazardous and nonmedical waste in accordance with applicable federal, state and local rules, including the use of appropriate containers and collection and disposal services if infectious wastes are generated.

(3) A locked housekeeping room on each level of the RTF that is equipped with:

(a) A utility sink or equivalent means of obtaining and disposing of mop water separate from food preparation and service areas; and

(b) Storage for cleaning supplies and wet mops which is mechanically ventilated to the outside according to standards adopted by the state building code council, chapter 51-13 WAC.

(4) Adequate storage space for:

(a) Clean and soiled equipment and linens;

(b) Lockable, shelved storage impervious to moisture, for cleaning supplies, disinfectants and poisonous compounds; and

(c) Separate, locked storage for flammable materials or other fire and safety hazards.

(5) A safe and cleanable area is designated for pouring stock chemicals and cleaning supplies into separate, properly labeled containers if stock chemicals are used.

(6) An effective pest control program so that the RTF is free of pests such as rodents and insects.

[Statutory Authority: Chapter 71.12 RCW. 05-15-157, § 246-337-115, filed 7/20/05, effective 8/20/05.]

WAC 246-337-120 Facility, environment, and space requirements. The licensee must ensure that each RTF, exterior grounds and component parts such as, but not limited to, fences, equipment, outbuildings and landscape items are safe, free of hazards, clean, and maintained in good repair, including:

(1) Each RTF shall be located on a site which is:

(a) Free of standing water; and

(b) Accessible by emergency vehicles on at least one street, road or driveway usable under all weather conditions and free of major potholes or obstructions.

(2) Develop and implement systems for routine preventative maintenance, including:

(a) Heating ventilation and air conditioning, plumbing and electrical equipment;

(b) Certification and calibration of biomedical and therapeutic equipment; and

(c) Documentation of all maintenance.

(3) Rooms shall be provided for dining, multipurpose, counseling, therapy and social activities, including:

(a) At least forty square feet per resident for the total combined area which is utilized for dining, social, educational, recreational activities and group therapies;

(b) A ceiling height of at least seven and one-half feet over the required floor area throughout the RTF;

(c) At least one private area for visitation of residents and guests;

(d) Therapy rooms for individual and group counseling that maintain visual and auditory confidentiality in the ratio of at least one room per twelve residents; and

(e) A medical examination room, when there is routine physical examination of residents within the RTF. The examination room must be equipped with:

(i) An exam table with at least three feet of space on two sides and end of the table for staff access;

(ii) An examination light;

(iii) Storage units for medical supplies and equipment;

(iv) A handwashing sink;

(f) Dining room(s) or area(s) are large enough to accommodate all residents at a single sitting or in no more than three shifts. If the space is used for more than one purpose, that space must be designed to accommodate each of the activities without unreasonable interference with one another.

(4) Equip stairways with more than one riser and ramps with slopes greater than one in twenty with handrails on both sides. Ends of handrails are designed in a manner that eliminates a hooking hazard.

(5) School facilities, excluding child care, serving residents on the same grounds as the RTF must meet all requirements for health and safety and comply with chapter 246-366 WAC, Primary and secondary schools.

[Statutory Authority: Chapter 71.12 RCW. 05-15-157, § 246-337-120, filed 7/20/05, effective 8/20/05.]

WAC 246-337-125 Toilet rooms and bathrooms. The licensee must ensure that private or common-use toilet rooms and bathrooms are available to residents including:

(1) Provision for a minimum of one toilet (water closet) and handwashing sink for every eight residents, or fraction thereof. Urinals may count for up to one-third of the required toilets in a male-only toilet room.

(2) A toilet and handwashing sink in, or immediately accessible to each bathroom.

(3) A minimum of one bathing fixture for every eight residents.

(4) Rooms containing more than one water closet or more than one bathing area must:

(a) Be designated for use by one gender, unless it is a toilet specifically designated for children under the age of six years;

(b) Provide for privacy during toileting, bathing, and dressing through the use of doors or dividers;

(5) Each toilet room and bathroom must be equipped with:

(a) Water resistant, smooth, easily cleanable, slip-resistant bathtubs, showers, and floor surfaces;

(b) Washable walls to the height of splash or spray;

(c) Washable cabinets and counter tops;

(d) Plumbing fixtures designed for easy cleaning;

(e) Clean, nonabsorbent toilet seats free of cracks;

(f) Grab bars installed at each water closet and bathing fixture;

(g) Shatter resistant mirrors when appropriate;

(h) Adequate lighting for general illumination;

(i) One or more handwashing sink with soap and single use or disposable towels with a mounted paper towel dispenser, unless a blower or equivalent hand-drying device is provided;

(j) Toilet tissue with a reachable mounted tissue dispenser by each toilet.

(6) Reasonable access to bath and toilet rooms must be provided by:

(a) Locating a toilet room and bathing facilities on the same floor or level as the sleeping room of the resident; and

(b) Providing access without passage through any food preparation area or from one bedroom through another bedroom.

(7) If a toilet room or bathing facility adjoins a bedroom, the bathing facility is restricted to use by those residents residing in the adjoining bedrooms.

[Statutory Authority: Chapter 71.12 RCW. 05-15-157, § 246-337-125, filed 7/20/05, effective 8/20/05.]

WAC 246-337-130 Water supply, sewage and waste disposal. The licensee must ensure that water supply and waste disposal in each facility meet the provisions of chapter 246-290 or 246-291 WAC, whichever applies, including:

(1) Maintaining tempered water between one hundred and one hundred twenty degrees Fahrenheit in resident areas.

(2) Maintaining the plumbing systems free of cross connections.

(3) Assuring all sewage and waste water drain into a public sewer system in compliance with applicable laws and rules, or meet the requirements of chapters 246-272 and 173-240 WAC, and local laws and rules.

[Statutory Authority: Chapter 71.12 RCW. 05-15-157, § 246-337-130, filed 7/20/05, effective 8/20/05.]

WAC 246-337-135 Heating, ventilation and air conditioning. (1) The licensee must ensure that all rooms used by residents are able to maintain interior temperatures between sixty-five degrees Fahrenheit and seventy-eight degrees Fahrenheit year-round.

(2) Direct evaporative coolers may not be used for cooling. In existing facilities, no new or replacement evaporative coolers may be used after adoption of these rules. Facilities currently using direct evaporative coolers (swamp coolers or similar equipment) shall follow manufacturer's instructions and develop and implement a written preventive maintenance program.

(3) All areas of the building must be ventilated to prevent excessive odors and moisture. The ventilation system must be in compliance with chapter 51-13 WAC. Facilities licensed prior to July 1991 may continue to use windows for ventilating toilet rooms, bathrooms, and janitor rooms if the windows are equipped with sixteen gauge mesh screens.

[Statutory Authority: Chapter 71.12 RCW. 05-15-157, § 246-337-135, filed 7/20/05, effective 8/20/05.]

WAC 246-337-140 Lighting, emergency lighting, and electrical outlets. The licensee must ensure that lighting, emergency lighting, and electrical outlets are adequate and safe including:

(1) Light fixtures are protected against light bulb breakage by using appropriately fitted shields, bulbs, or tubes manufactured with shatter resistant materials in all areas occupied by residents, including common areas, and in medication and food preparation areas.

(2) Each room or area occupied by children under age five or residents with unsafe behaviors must have tamper resistant electrical outlets.

(3) Each electrical outlet within six feet of a sink or wet area must be of the ground fault interrupter type or be controlled by a ground fault circuit interrupter.

(4) Provide emergency lighting on each floor.

(5) Provide operable exterior lighting with solar or battery backup at the exit and entry doors.

[Statutory Authority: Chapter 71.12 RCW. 05-15-157, § 246-337-140, filed 7/20/05, effective 8/20/05.]

WAC 246-337-145 Laundry. The licensee must ensure that laundry facilities, equipment, handling and processes ensure linen and laundered items provided to residents are clean, in good repair and adequate to meet the needs of residents including:

(1) The licensee must provide laundry and linen services on the premises, or by commercial laundry.

(2) The licensee must handle, clean, and store linen according to acceptable methods of infection control. The licensee must:

(a) Provide separate areas for handling clean laundry and soiled laundry;

(b) Ensure clean laundry is not processed in, and does not pass through, areas where soiled laundry is handled;

(c) Ensure areas where clean laundry is stored are not exposed to contamination from other sources;

(d) Ensure all staff wears appropriate personal protective equipment and uses appropriate infection control practices when handling laundry;

(e) Ensure that damp textiles or fabrics are not left in machines for longer than twelve hours;

(f) Ensure that gross soil is removed before washing and proper washing and drying procedures are used; and

(g) Ensure that contaminated textiles and fabrics are handled with minimum agitation to avoid contamination of air, surfaces and persons.

(3) The licensee must use and maintain laundry equipment according to manufacturers' instructions.

(4) The licensee must use washing machines that have a continuous supply of hot water with a temperature of one hundred forty degrees Fahrenheit, or that automatically dispense a chemical sanitizer and detergent or wash additives as specified by the manufacturer, whenever the licensee washes:

(a) Licensee's laundry;

(b) Licensee's laundry is combined with resident's laundry into a single load; or

(c) More than one resident's laundry is combined into a single load.

(5) The licensee or a resident washing an individual resident's personal laundry, separate from other laundry, may wash the laundry at temperatures below one hundred forty degrees Fahrenheit provided chemicals suitable for low temperature washing at proper use concentration and according to the cleaning instructions of the textile, fabric or clothing are used.

(6) The licensee must ventilate laundry rooms and areas to the exterior including areas or rooms where soiled laundry is held for processing by off-site commercial laundry services.

(7) The licensee must locate laundry equipment in rooms other than those used for open food storage, food preparation or food service.

(8) If the licensee provides a laundry area where residents may do their personal laundry, the laundry area must be arranged to reduce the chances of soiled laundry contaminating clean laundry and equipped with:

(a) A utility sink;

(b) A table or counter for folding clean laundry;

(c) At least one washing machine and one clothes dryer; and

(d) Mechanical ventilation to the exterior.

[Statutory Authority: Chapter 71.12 RCW. 05-15-157, § 246-337-145, filed 7/20/05, effective 8/20/05.]

WAC 246-337-150 Resident rooms, furnishings and storage. The RTF shall ensure that residents have an accessible, clean, well-maintained room with sufficient space, light, and comfortable furnishings for sleeping and personal activities including, but not limited to:

(1) Sleeping rooms designed to provide at least a three-foot clear access aisle from the entry door, along at least one side of each bed, and in front of all storage equipment.

(2) If a bunk bed is used, a minimum access aisle of five feet shall be provided along at least one side of the bunk bed.

(3) Room identification and resident capacity per sleeping room consistent with the approved room list and evacuation floor plan.

(4) Direct access to a hallway, living room, lounge, the outside, or other common use area without going through a laundry or utility area, a bath or toilet room, or another resident's bedroom.

(5) Each sleeping room having one or more outside windows that:

(a) Is easily opened if necessary for fire exit or ventilation;

(b) Is marked with a solid color or barriers to prevent residents from accidentally walking into them if clear glass windows or doors extend to the floor;

(c) Has adjustable curtains, shades, blinds, or equivalent installed at the windows for visual privacy; and

(d) Is shatterproof, screened, or of the security type as determined by the resident needs.

(6) Sleeping rooms equipped with:

(a) One or more noncombustible waste containers;

(b) An individual towel and washcloth rack or an equivalent method to provide clean towels and washcloths;

(c) Storage facilities for storing a reasonable quantity of clothing and, when requested by the resident, storage in a lockable drawer, cupboard, locker, or other secure space somewhere in the building;

(d) Furniture appropriate for the age and physical condition of each resident, must be provided, including:

(i) A chair, which may be used in either the bedroom or a group room interchangeably;

(ii) A bed of appropriate size equipped with:

(A) A mattress that is clean, in good repair, and fits the frame;

(B) One or more pillows that are clean, and in good repair for each resident over two and one-half years;

(C) Bedding that includes a tight-fitting sheet or cover for the sleeping surface, and a clean blanket or suitable cover; and

(D) Bedding that is in good repair, changed weekly or more often as necessary to maintain cleanliness;

(iii) A bed thirty-six or more inches wide for adults and appropriate size for children, spaced thirty-six inches apart;

(iv) A single level nonstacking crib, infant bed, bassinet or playpen for children twenty-four months and younger meeting chapter 70.111 RCW, and including:

(A) Sleep equipment having secure latching devices; and

(B) A mattress that is:

(I) Snug-fitting to prevent the infant from becoming entrapped between the mattress and crib side rails;

(II) Waterproof and easily sanitized; and

(III) Free of crib bumpers, stuffed toys or pillows;

(v) A youth bed or regular bed for children twenty-five months and older;

(vi) If bunk beds are used, children six years of age or less are prohibited from utilizing the upper bunk.

[Statutory Authority: Chapter 71.12 RCW. 05-15-157, § 246-337-150, filed 7/20/05, effective 8/20/05.]

WAC 246-337-155 Pet management and safety. The licensee must ensure the health and safety of residents and all service animals, therapy animals, and pets when allowed on the premises.

[Statutory Authority: Chapter 71.12 RCW. 05-15-157, § 246-337-155, filed 7/20/05, effective 8/20/05.]

WAC 246-337-990 Licensing fees. A licensee must submit the following fees to the department:

FEE TYPE	AMOUNT
Administrative processing/ initial application fee	$204.00
License bed fee (per bed)	$190.00
Annual renewal fee (per bed)	$190.00
Late fee (per bed)	$33.00 (up to $660.00)
Follow-up compliance survey fee or a complete on-site survey fee resulting from a substantiated complaint	$1,320.00

(1) The department shall refund fees paid by the applicant for initial licensure if:

(a) The department has received an application but has not conducted an on-site survey or provided technical assistance. The department shall refund two-thirds of the fees paid, less a fifty dollar processing fee;

(b) The department has received an application and has conducted an on-site survey or provided technical assistance. The department shall refund one-third of the fees paid, less a fifty dollar processing fee.

(2) The department will not refund fees paid by the applicant if:

(a) The department has conducted more than one on-site visit for any purpose;

(b) One year has elapsed since the department received an initial licensure application, and the department has not issued a license because the applicant failed to complete requirements for licensure; or

(c) The amount to be refunded as calculated by subsection (1)(a) or (b) of this section is ten dollars or less.

[Statutory Authority: RCW 43.70.250, 70.38.105, 18.46.030, 70.127.090, 43.70.040. 08-12-036, § 246-337-990, filed 5/30/08, effective 7/1/08. Statutory Authority: RCW 43.70.250. 06-21-108, § 246-337-990, filed 10/17/06, effective 11/17/06; 05-23-099, § 246-337-990, filed 11/17/05, effective 12/18/05. Statutory Authority: Chapter 71.12 RCW. 05-15-157, § 246-337-990, filed 7/20/05, effective 8/20/05.]

Chapter 246-338 WAC
MEDICAL TEST SITE RULES

WAC

246-338-001 Purpose.
246-338-010 Definitions.
246-338-020 Licensure—Types of medical test site licenses.
246-338-022 Initial application for medical test site license.
246-338-024 License renewal/reapplication process.
246-338-026 Notification requirements.
246-338-028 On-site inspections.
246-338-040 Approval of accreditation organizations.
246-338-050 Proficiency testing.
246-338-060 Personnel.
246-338-070 Records.
246-338-080 Quality assurance.
246-338-090 Quality control.
246-338-100 Disciplinary action.
246-338-110 Adjudicative proceedings.
246-338-990 Fees.

DISPOSITION OF SECTIONS FORMERLY CODIFIED IN THIS CHAPTER

246-338-030 Waiver from licensure of medical test sites. [Statutory Authority: RCW 70.42.005. 97-14-113, § 246-338-030, filed 7/2/97, effective 8/2/97. Statutory Authority: Chapter 70.42 RCW. 94-17-099, § 246-338-030, filed 8/17/94, effective 9/17/94; 93-18-091 (Order 390), § 246-338-030, filed 9/1/93, effective 10/2/93; 91-21-062 (Order 205), § 246-338-030, filed 10/16/91, effective 10/16/91. Statutory Authority: RCW 43.70.040. 91-02-049 (Order 121), recodified as § 246-338-030, filed 12/27/90, effective 1/31/91. Statutory Authority: Chapter 70.42 RCW. 90-20-017 (Order 090), § 248-38-030, filed 9/21/90, effective 10/22/90.] Repealed by 00-06-079, filed 3/1/00, effective 4/1/00. Statutory Authority: RCW 70.42.005, 70.42.060 and chapter 70.42 RCW.

WAC 246-338-001 Purpose. The purpose of this chapter is to implement chapter 70.42 RCW, by establishing licensing standards for medical test sites, consistent with federal law and regulation, related to quality control, quality assurance, records, personnel requirements, proficiency testing, and licensure waivers.

[Statutory Authority: RCW 70.42.005, 70.42.060 and chapter 70.42 RCW. 00-06-079, § 246-338-001, filed 3/1/00, effective 4/1/00. Statutory Authority: RCW 43.70.040. 91-02-049 (Order 121), recodified as § 246-338-001, filed 12/27/90, effective 1/31/91. Statutory Authority: Chapter 70.42 RCW. 90-20-017 (Order 090), § 248-38-001, filed 9/21/90, effective 10/22/90.]

WAC 246-338-010 Definitions. For the purposes of this chapter, the following words and phrases have these meanings unless the context clearly indicates otherwise.

(1) "Accreditation organization" means a public or private organization or agency approved by CMS as having standards which are consistent with federal law and regulation, and judged by the department to be equivalent to this chapter.

(2) "Authorized person" means any individual allowed by Washington state law or rule to order tests or receive test results.

(3) "Biannual verification" means a system for verifying the accuracy of test results, at least twice a calendar year, for those tests for which proficiency testing is not required by the department.

(4) "Calibration" means a process of testing and adjusting an instrument, kit, or test system to provide a known relationship between the measurement response and the value of the substance that is being measured by the test procedure.

(5) "Calibration verification" means the assaying of materials of known concentration in the same manner as patient samples to confirm that the calibration of the instrument, kit, or test system has remained stable throughout the laboratory's reportable range for patient test results.

(6) "Calibrator" means a material, solution, or lyophilized preparation designed to be used in calibration. The values or concentrations of the analytes of interest in the calibration material are known within limits ascertained during its preparation or before use.

(7) "Case" means any slide or group of slides, from one patient specimen source, submitted to a medical test site, at one time, for the purpose of cytological or histological examination.

(8) "CDC" means the federal Centers for Disease Control and Prevention.

(9) "CMS" means the federal Centers for Medicare and Medicaid Services.

(10) "CLIA" means Section 353 of the Public Health Service Act, Clinical Laboratory Improvement Amendments of 1988, and regulations implementing the federal amend-

ments, 42 CFR Part 493-Laboratory Requirements in effect on September 22, 2003.

(11) "Control" means a material, solution, lyophilized preparation, or pool of collected serum designed to be used in the process of quality control. The concentrations of the analytes of interest in the control material are known within limits ascertained during its preparation or before routine use.

(12) "Control slide" means a preparation of a material known to produce a specific reaction which is fixed on a glass slide and is used in the process of quality control.

(13) "Days" means calendar days.

(14) "Deemed status" means recognition that the requirements of an accreditation organization have been judged to be equal to, or more stringent than, the requirements of this chapter and the CLIA requirements, and the accreditation organization has agreed to comply with all requirements of this chapter and CLIA.

(15) "Deficiency" means a finding from an inspection or complaint investigation that is not in compliance with this chapter and requires corrective action.

(16) "Department" means the department of health.

(17) "Direct staff time" means all state employees' work time; travel time; telephone contacts and staff or management conferences; and expenses involved with a complaint investigation or an on-site follow-up visit.

(18) "Director," defined as the designated test site supervisor in RCW 70.42.010, means the individual responsible for the technical functions of the medical test site. This person must meet the qualifications for Laboratory Director, listed in 42 CFR Part 493 Subpart M - Personnel for Nonwaived Testing.

(19) "Disciplinary action" means license or certificate of waiver denial, suspension, condition, revocation, civil fine, or any combination of the preceding actions, taken by the department against a medical test site.

(20) "Facility" means one or more locations within one campus or complex where tests are performed under one owner.

(21) "Forensic" means investigative testing in which the results are never used for clinical diagnosis, or referral to a health care provider for treatment of an individual.

(22) "HHS" means the federal Department of Health and Human Services.

(23) "High complexity" means a test system, assay, or examination that is categorized under CLIA as a high complexity test.

(24) "May" means permissive or discretionary.

(25) "Medical test site" or "test site" means any facility or site, public or private, which analyzes materials derived from the human body for the purposes of health care, treatment, or screening. A medical test site does not mean:

(a) A facility or site, including a residence, where a test approved for home use by the Federal Food and Drug Administration is used by an individual to test himself or herself without direct supervision or guidance by another and where this test is not part of a commercial transaction; or

(b) A facility or site performing tests solely for forensic purposes.

(26) "Moderate complexity" means a test system, assay, or examination that is categorized under CLIA as a moderate complexity test.

(27) "Must" means compliance is mandatory.

(28) "Nonwaived" means all tests categorized under CLIA as:

(a) Moderate complexity tests, including provider-performed microscopic procedures; or

(b) High complexity tests.

(29) "Owner" means the person, corporation, or entity legally responsible for the business requiring licensure or a certificate of waiver as a medical test site under chapter 70.42 RCW.

(30) "Performance specification" means a value or range of values for a test that describe its accuracy, precision, analytical sensitivity, analytical specificity, reportable range and reference range.

(31) "Person" means any individual, public organization, private organization, agent, agency, corporation, firm, association, partnership, or business.

(32) "Physician" means an individual with a doctor of medicine, doctor of osteopathy, doctor of podiatric medicine, or equivalent degree who is a licensed professional under chapter 18.71 RCW Physicians; chapter 18.57 RCW Osteopathy—Osteopathic medicine and surgery; or chapter 18.22 RCW Podiatric medicine and surgery.

(33) "Provider-performed microscopic procedures" means only those moderate complexity tests listed under WAC 246-338-020 (2)(b)(i) through (x), when the tests are performed in conjunction with a patient's visit by a licensed professional meeting qualifications specified in WAC 246-338-020 (2)(a)(i) through (vi).

(34) "Provisional license" means an interim approval issued by the department to the owner of a medical test site.

(35) "Records" means books, files, reports, or other documentation necessary to show compliance with the quality control and quality assurance requirements under this chapter.

(36) "Reference material" means a material or substance, calibrator, control, or standard where one or more properties are sufficiently well established for use in calibrating a process or for use in quality control.

(37) "Specialty" means a group of similar subspecialties or tests. The specialties for a medical test site are as follows:

(a) Chemistry;

(b) Cytogenetics;

(c) Diagnostic immunology;

(d) Immunohematology;

(e) Hematology;

(f) Histocompatibility;

(g) Microbiology;

(h) Pathology; and

(i) Radiobioassay.

(38) "Standard" means a reference material of fixed and known chemical composition capable of being prepared in essentially pure form, or any certified reference material generally accepted or officially recognized as the unique standard for the assay regardless of level or purity of the analyte content.

(39) "Subspecialty" means a group of similar tests. The subspecialties of a specialty for a medical test site are as follows, for:

(a) Chemistry, the subspecialties are routine chemistry, urinalysis, endocrinology, and toxicology;

(b) Diagnostic immunology, the subspecialties are syphilis serology and general immunology;

(c) Immunohematology, the subspecialties are ABO grouping and Rh typing, antibody detection, antibody identification, and compatibility testing;

(d) Hematology, the subspecialties are routine hematology and coagulation;

(e) Microbiology, the subspecialties are bacteriology, mycology, parasitology, virology, and mycobacteriology; and

(f) Pathology, the subspecialties are histopathology (including dermatopathology), diagnostic cytology, and oral pathology.

(40) "Supervision" means authoritative procedural guidance by an individual qualified under 42 CFR Part 493 Subpart M - Personnel for Non-waived Testing, assuming the responsibility for the accomplishment of a function or activity by technical personnel.

(41) "Technical personnel" means individuals employed to perform any test or part of a test.

(42) "Test" means any examination or procedure conducted on a sample taken from the human body.

(43) "Validation inspection" means an on-site inspection by the department of an accredited medical test site to determine that the accreditation organization's regulations are equivalent to this chapter and are enforced.

(44) "Waived test" means a test system that is:

(a) Cleared by the Food and Drug Administration for home use; or

(b) A simple laboratory examination or procedure that has an insignificant risk of an erroneous result.

In order for a test system to be waived, it must be approved for waiver under CLIA.

(45) "Will" means compliance is mandatory.

[Statutory Authority: RCW 70.42.005 and 42 C.F.R. Part 493. 05-04-040, § 246-338-010, filed 1/27/05, effective 3/19/05. Statutory Authority: RCW 70.42.005, 70.42.060 and chapter 70.42 RCW. 00-06-079, § 246-338-010, filed 3/1/00, effective 4/1/00. Statutory Authority: Chapter 70.42 RCW. 94-17-099, § 246-338-010, filed 8/17/94, effective 9/17/94; 93-18-091 (Order 390), § 246-338-010, filed 9/1/93, effective 10/2/93; 91-21-062 (Order 205), § 246-338-010, filed 10/16/91, effective 10/16/91. Statutory Authority: RCW 43.70.040. 91-02-049 (Order 121), recodified as § 246-338-010, filed 12/27/90, effective 1/31/91. Statutory Authority: Chapter 70.42 RCW. 90-20-017 (Order 090), § 248-38-010, filed 9/21/90, effective 10/22/90.]

WAC 246-338-020 Licensure—Types of medical test site licenses. After July 1, 1990, any person advertising, operating, managing, owning, conducting, opening, or maintaining a medical test site must first obtain a license from the department. License types are described in Table 020-1.

(1) **Certificate of waiver.**

Applicable if the medical test site performs only the tests classified as waived.

(2) **Provider performed microscopic procedures (PPMP).**

Applicable if the medical test site restricts its testing performance to one or more of the following moderate complexity tests performed by one of the licensed professionals listed, in conjunction with a patient's visit. In addition, the medical test site can perform tests classified as waived with this type of license.

(a) PPMP may be performed only by one of the following licensed professionals:

(i) Physician licensed under chapter 18.71 RCW, Physicians; chapter 18.57 RCW, Osteopathy—Osteopathic medicine and surgery; or chapter 18.22 RCW, Podiatric medicine and surgery;

(ii) Advanced registered nurse practitioner, licensed under chapter 18.79 RCW, Nursing care;

(iii) Midwife licensed under chapter 18.50 RCW, Midwifery;

(iv) Physician assistant licensed under chapter 18.71A RCW, Physician assistants;

(v) Naturopath licensed under chapter 18.36A RCW, Naturopathy; or

(vi) Dentist licensed under chapter 18.32 RCW, Dentistry.

(b) Microscopic procedures authorized under a PPMP license are:

(i) All direct wet mount preparations for the presence or absence of bacteria, fungi, parasites, and human cellular elements;

(ii) All potassium hydroxide (KOH) preparations;

(iii) Pinworm examinations;

(iv) Fern tests;

(v) Postcoital direct, qualitative examinations of vaginal or cervical mucous;

(vi) Urine sediment examinations;

(vii) Nasal smears for granulocytes;

(viii) Fecal leukocyte examinations;

(ix) Qualitative semen analysis (limited to the presence or absence of sperm and detection of motility); and

(x) Any other tests subsequently categorized under CLIA as provider-performed microscopy procedures.

(3) **Moderate/high complexity.**

(a) **Low volume, Category A-J,** as described in Table 990-1.

Applicable if the medical test site performs any tests that are not classified as waived or qualified as PPMP under subsection (2) of this section. Under this type of license, the medical test site may also perform tests classified as waived.

(b) **Accredited: Low volume, Category A-J,** as described in Table 990-1.

Applicable if the medical test site performs any tests that are not classified as waived, and is accredited **and** inspected by an accreditation organization approved by the department under WAC 246-338-040. Under this type of license, the medical test site may also perform tests classified as waived.

020-1 Table of Requirements for Each License Type

LICENSE TYPE	REQUIREMENTS	INSPECTIONS	
		TYPE	FREQUENCY
(1) **Certificate of Waiver**	• Restrict testing to tests classified as waived. • Meet the requirements of WAC 246-338-020 Licensure—Types of Medical Test Site Licenses; WAC 246-338-022 Initial Application for Medical Test Site License; WAC 246-338-024 License Renewal/Reapplication Process; WAC 246-338-026 Notification Requirements; WAC 246-338-028 On-site Inspections. • Follow manufacturers' instructions for performing the test.	• Complaint • Technical assistance	• When indicated
(2) **PPMP**	• Restrict testing to tests classified as PPMP or waived. • Meet the requirements of WAC 246-338-020 Licensure—Types of Medical Test Site Licenses; WAC 246-338-022 Initial Application for Medical Test Site License; WAC 246-338-024 License Renewal/Reapplication Process; WAC 246-338-026 Notification Requirements; WAC 246-338-028 On-site Inspections; WAC 246-338-050 Proficiency Testing (if applicable); WAC 246-338-060 Personnel; WAC 246-338-070 Records; WAC 246-338-080 Quality Assurance; WAC 246-338-090 Quality Control. • Follow manufacturers' instructions for performing the test.	• Complaint • Technical assistance	• When indicated
(3) **Moderate/High Complexity**			
(a) **Low Volume, Category A-J**	• Perform tests classified as moderate or high complexity. • Meet the requirements of WAC 246-338-020 Licensure—Types of Medical Test Site Licenses; WAC 246-338-022 Initial Application for Medical Test Site License; WAC 246-338-024 License Renewal/Reapplication Process; WAC 246-338-026 Notification Requirements; WAC 246-338-028 On-site Inspections; WAC 246-338-050 Proficiency Testing (if applicable); WAC 246-338-060 Personnel; WAC 246-338-070 Records; WAC 246-338-080 Quality Assurance; WAC 246-338-090 Quality Control. • Follow manufacturers' instructions for performing test.	• Initial • Routine • Complaint • On-site follow-up • Technical assistance	• First 6 months of license • Every 2 years • When indicated • When indicated • When indicated
(b) **Accredited: Low Volume, Category A-J**	• Perform tests classified as moderate or high complexity. • Meet the requirements of WAC 246-338-020 Licensure—Types of Medical Test Site Licenses; WAC 246-338-022	• Validation • Complaint • On-site follow-up	• 2.5 % of accredited sites annually • When indicated • When indicated

LICENSE TYPE	REQUIREMENTS	INSPECTIONS	
		TYPE	FREQUENCY
	Initial Application for Medical Test Site License; WAC 246-338-024 License Renewal/Reapplication Process; WAC 246-338-026 Notification Requirements; WAC 246-338-028 On-site Inspections; WAC 246-338-050 Proficiency Testing (if applicable); WAC 246-338-060 Personnel; WAC 246-338-070 Records; WAC 246-338-080 Quality Assurance; WAC 246-338-090 Quality Control. • Follow manufacturers' instructions for performing the test. • Submit to the department upon request, or authorize the accreditation organization to submit: • Proof of accreditation; • On-site inspection results; • Statement of deficiencies; • Plan of correction for the deficiencies cited; • Any disciplinary action and results of any disciplinary action taken by the accreditation organization against the medical test site.	• Technical assistance	• When indicated

[Statutory Authority: RCW 70.42.090 and 2002 c 371. 02-12-105, § 246-338-020, filed 6/5/02, effective 7/6/02. Statutory Authority: RCW 70.42.005, 70.42.060. 01-02-069, § 246-338-020, filed 12/29/00, effective 1/29/01. Statutory Authority: RCW 70.42.005, 70.42.060 and chapter 70.42 RCW. 00-06-079, § 246-338-020, filed 3/1/00, effective 4/1/00. Statutory Authority: RCW 70.42.005. 97-14-113, § 246-338-020, filed 7/2/97, effective 8/2/97. Statutory Authority: Chapter 70.42 RCW. 94-17-099, § 246-338-020, filed 8/17/94, effective 9/17/94; 93-18-091 (Order 390), § 246-338-020, filed 9/1/93, effective 10/2/93; 91-21-062 (Order 205), § 246-338-020, filed 10/16/91, effective 10/16/91. Statutory Authority: RCW 43.70.040. 91-02-049 (Order 121), recodified as § 246-338-020, filed 12/27/90, effective 1/31/91. Statutory Authority: Chapter 70.42 RCW. 90-20-017 (Order 090), § 248-38-020, filed 9/21/90, effective 10/22/90.]

WAC 246-338-022 Initial application for medical test site license. (1) **Application procedure.**

Applicants requesting a medical test site license must:

(a) Submit a completed application on forms furnished by the department, signed by the owner or authorized representative;

(b) File a separate application for each test site **except** under the following conditions:

(i) If the test site is not at a fixed location and moves from testing site to testing site, or uses a temporary testing location such as a health fair, the medical test site may apply for a single license for the home base location;

(ii) If the medical test site is a not-for-profit or state or local government and performs a combination of fifteen or less of either waived or moderate complexity test procedures at different locations, the owner may file an application for a single license;

(c) Furnish full and complete information to the department in writing:

(i) Name, address, phone number, and federal tax ID number of the medical test site;

(ii) Name of owner;

(iii) Number and types of tests performed, planned, or projected;

(iv) Name and qualifications including educational background, training, and experience of the director;

(v) Names and qualifications including educational background, training, and experience of technical personnel, if requested by the department;

(vi) Name of proficiency testing program or programs used by the medical test site and a copy of the enrollment confirmation form, if applicable;

(vii) Methodologies for tests performed, if requested by the department; and

(viii) Other information as requested by the department;

(d) Submit the designated fee in the time period indicated, upon receipt of a fee statement from the department;

(e) If applying for an accredited license, submit proof of accreditation by an approved accreditation organization. If application has been made to an accreditation organization, submit a copy of the application, followed by proof of accreditation within eleven months of issuance of the medical test site license.

(2) **Issuing an initial license.**

(a) An initial license will be issued for a medical test site when the applicant:

(i) Submits a completed application and any information requested by the department;

(ii) Pays the designated license fee; and

(iii) Meets the requirements of chapter 70.42 RCW and this chapter.

(b) License expiration dates will be based on a two-year licensure cycle, expiring on June 30th of odd-numbered years. The license period for an initial license begins the day

of the month that payment is received and expires on June 30th of odd-numbered years.

(c) For licenses issued for a period of less than two years, the license fee will be prorated for the remainder of the two-year cycle under WAC 246-338-990.

(d) The department may issue a provisional license valid for a period of up to two years when a medical test site applies for licensure for the first time.

(e) The department will terminate a provisional license at the time a two-year license for the medical test site is issued.

(f) License fees are listed under WAC 246-338-990.

[Statutory Authority: RCW 70.42.090. 06-15-132, § 246-338-022, filed 7/19/06, effective 8/19/06. Statutory Authority: RCW 70.42.005, 70.42.060 and chapter 70.42 RCW. 00-06-079, § 246-338-022, filed 3/1/00, effective 4/1/00.]

WAC 246-338-024 License renewal/reapplication process. (1) The department will issue a renewal license for a medical test site when the owner:

(a) At least thirty days prior to the expiration date of the current license, submits a completed renewal application form, available from the department, in compliance with WAC 246-338-022(1) and submits the designated fee; and

(b) Meets the requirements of chapter 70.42 RCW and this chapter.

(2) A license is issued for a period of two years. License expiration dates are based on a two-year cycle, expiring on June 30th of odd-numbered years.

(3) For licenses issued for a period of less than two years, the license fee shall be prorated based on the two-year fees listed under WAC 246-338-990.

(4) The department may extend a license for a period not to exceed six months beyond the expiration date of the license.

(5) The department will require the owner of the medical test site to reapply for a license if proof of accreditation is not supplied to the department within eleven months of issuance of an accredited license.

(6) The owner or applicant of a medical test site must reapply for licensure within thirty days, if the acceptance of approval of the accreditation organization for the medical test site is denied or terminated.

(7) If at any time any of the changes listed in WAC 246-338-026 occur, the medical test site may require a different type of license than what the medical test site currently holds. If so, the owner must submit a reapplication form, within thirty days of the change, and pay applicable fees.

[Statutory Authority: RCW 70.42.090. 06-15-132, § 246-338-024, filed 7/19/06, effective 8/19/06. Statutory Authority: RCW 70.42.005, 70.42.060 and chapter 70.42 RCW. 00-06-079, § 246-338-024, filed 3/1/00, effective 4/1/00.]

WAC 246-338-026 Notification requirements. (1) The owner must notify the department in writing at least thirty days prior to the date of opening or closing the medical test site.

(2) The owner must notify the department in writing within thirty days of any changes in:

(a) Name of site;

(b) Director;

(c) Location of site;

(d) Tests, specialties, and subspecialties; and

(e) Test methodologies.

(3) Proposed change of ownership. Transfer or reassignment of a license is prohibited without the department's approval, and must be initiated by the current owner sending a written notice to the department thirty days prior to transfer.

(a) The current owner of a medical test site must notify the department, in writing at least thirty days prior to the change and provide the following information:

(i) Name, address, and federal tax ID number of the medical test site;

(ii) Full name, address, and location of the current owner and prospective new owner; and

(iii) The date of the proposed change of ownership.

(b) The prospective new owner must submit the following information at least thirty days prior to the change of ownership:

(i) New name and federal tax ID number of the medical test site;

(ii) Changes in technical personnel and supervisors;

(iii) Any changes in tests, specialties, and subspecialties; and

(iv) Other information as requested by the department.

(4) The medical test site must authorize an approved accreditation organization to notify the department of the test site's compliance with the standards of the accreditation organization.

(5) The owner of an accredited license must notify the department in writing within thirty days of the medical test site having its accreditation denied or terminated by the accreditation organization or voluntarily dropping its accreditation status.

(6) The owner must notify the department in writing within thirty days of any convictions of fraud and abuse, false billing, or kickbacks under state or federal law.

[Statutory Authority: RCW 70.42.005, 70.42.060 and chapter 70.42 RCW. 00-06-079, § 246-338-026, filed 3/1/00, effective 4/1/00.]

WAC 246-338-028 On-site inspections. (1) The department may conduct an on-site review of a licensee or applicant at any time to determine compliance with chapter 70.42 RCW and this chapter as described in Table 020-1.

(2) The department may at any time examine records of the medical test site to determine compliance with chapter 70.42 RCW and this chapter.

(3) The department will:

(a) Provide written notice of deficiencies to the medical test site; and

(b) Allow the owner a reasonable period of time, not to exceed sixty days after department approval of the written plan of correction, to correct a deficiency unless the deficiency is an immediate threat to public health, safety, or welfare.

(4) The medical test site must:

(a) Present a written plan of correction to the department within fourteen days following the date of postmark of the notice of deficiencies;

(b) Comply with the written plan of correction within a specified time, not to exceed sixty days, after department approval of the written plan of correction which must detail

how and when the medical test site will correct the deficiencies;

(c) Submit to inspections by CMS or CMS agents as a condition of licensure for the purpose of validation or in response to a complaint against the medical test site;

(d) Authorize the department to release all records and information requested by CMS to CMS or CMS agents;

(e) Cooperate with any on-site review conducted by the department; and

(f) Authorize the accreditation organization to submit, upon request of the department:

(i) On-site inspection results;

(ii) Reports of deficiencies;

(iii) Plans of corrections for deficiencies cited;

(iv) Any disciplinary or enforcement action taken by the accreditation organization against the medical test site and results of any disciplinary or enforcement action taken by the accreditation organization against the medical test site; and

(v) Any records or other information about the medical test site required for the department to determine whether or not standards are consistent with chapter 70.42 RCW and this chapter.

[Statutory Authority: RCW 70.42.005 and 42 C.F.R. Part 493. 05-04-040, § 246-338-028, filed 1/27/05, effective 3/19/05. Statutory Authority: RCW 70.42.005, 70.42.060. 01-02-069, § 246-338-028, filed 12/29/00, effective 1/29/01. Statutory Authority: RCW 70.42.005, 70.42.060 and chapter 70.42 RCW. 00-06-079, § 246-338-028, filed 3/1/00, effective 4/1/00.]

WAC 246-338-040 Approval of accreditation organizations. (1) The department will recognize the accreditation organizations granted deemed status by CMS.

(2) The CMS-approved accreditation organizations are:

(a) American Association of Blood Banks (AABB);

(b) American Osteopathic Association (AOA);

(c) American Society of Histocompatibility and Immunogenetics (ASHI);

(d) College of American Pathologists (CAP);

(e) COLA; and

(f) Joint Commission on Accreditation of Healthcare Organizations (JCAHO).

(3) The accreditation organizations must:

(a) Allow the department to have jurisdiction to investigate complaints, do random on-site validation inspections, and take disciplinary action against a medical test site if indicated;

(b) Notify the department within fifteen days of any medical test site that:

(i) Has had its accreditation withdrawn, revoked, or limited;

(ii) Is sanctioned as a result of a routine inspection or complaint investigation; or

(iii) When adverse action has been taken for unsuccessful proficiency testing performance;

(c) Notify the department within five days of any deficiency that jeopardizes the public health, safety, or welfare; and

(d) Provide the department with a list of inspection schedules, as requested, for the purpose of conducting on-site validation inspections.

(4) The department will:

(a) Revoke deemed status from any organization which has deeming authority removed by CMS; and

(b) Notify the medical test site if approval of an accreditation organization is withdrawn by the department.

[Statutory Authority: RCW 70.42.005 and 42 C.F.R. Part 493. 05-04-040, § 246-338-040, filed 1/27/05, effective 3/19/05. Statutory Authority: RCW 70.42.005, 70.42.060 and chapter 70.42 RCW. 00-06-079, § 246-338-040, filed 3/1/00, effective 4/1/00. Statutory Authority: Chapter 70.42 RCW. 93-18-091 (Order 390), § 246-338-040, filed 9/1/93, effective 10/2/93; 91-21-062 (Order 205), § 246-338-040, filed 10/16/91, effective 10/16/91. Statutory Authority: RCW 43.70.040. 91-02-049 (Order 121), recodified as § 246-338-040, filed 12/27/90, effective 1/31/91. Statutory Authority: Chapter 70.42 RCW. 90-20-017 (Order 090), § 248-38-040, filed 9/21/90, effective 10/22/90.]

WAC 246-338-050 Proficiency testing. (1) All licensed medical test sites, excluding those granted a certificate of waiver, must:

(a) Comply with federal proficiency testing requirements listed in 42 CFR Part 493 - Laboratory Requirements, Subparts H and I;

(b) Submit to the department a copy of proficiency testing enrollment confirmation form(s) for the tests the medical test site will perform during the following calendar year, by December 31st of each year; and

(c) Authorize the proficiency testing program to release to the department all data required to determine the medical test site's compliance with this section.

(2) The department will:

(a) Recognize only those proficiency testing programs approved by HHS; and

(b) Furnish, upon request:

(i) A copy of 42 CFR Part 493 Subparts H and I;

(ii) A list of the proficiency testing programs approved by HHS; and

(iii) A list of tests that must be covered by proficiency testing.

(3) The department will evaluate proficiency testing results by using the following criteria:

(a) An evaluation of scores for the last three testing events of proficiency testing samples including:

(i) Tests;

(ii) Subspecialties; and

(iii) Specialties;

(b) Maintenance of a minimum acceptable score of eighty percent for all tests, subspecialties, and specialties except one hundred percent for:

(i) ABO grouping and Rh typing;

(ii) Compatibility testing; and

(iii) Antihuman immunodeficiency virus;

(c) Unsatisfactory performance occurs when:

(i) Unsatisfactory scores are obtained in any specialty or subspecialty in a testing event; or

(ii) An unsatisfactory score is obtained on a single test in a testing event.

(4) Unsatisfactory performance on two of any three successive testing events is considered unsuccessful participation, and will result in the following actions:

(a) The department will mail a letter to the director stating that the medical test site may choose to:

(i) Discontinue patient testing for the identified test, specialty or subspecialty; or

(ii) Follow a directed plan of correction; and

(b) The medical test site must notify the department, within fifteen days of receipt of the notice of the decision to:

(i) Discontinue testing patient specimens for the identified test, subspecialty or specialty; or

(ii) Agree to a directed plan of correction.

(5) Continued unsatisfactory performance for a test, specialty or subspecialty in either of the next two consecutive sets of proficiency testing samples, after completing a directed plan of correction, will result in the following action:

(a) The department will send, by certified mail, a notice to the owner and director of the medical test site to cease performing the identified test, subspecialty, or specialty; and

(b) The owner must notify the department in writing within fifteen days of the receipt of the notice of the decision to voluntarily stop performing tests on patient specimens for the identified test, subspecialty, or specialty.

(6) The owner may petition the department for reinstatement of approval to perform tests on patient specimens after demonstrating satisfactory performance on two successive testing events of proficiency testing samples for the identified test, subspecialty, or specialty.

(7) The department will notify the owner in writing, within fifteen days of receipt of petition, of the decision related to the request for reinstatement.

[Statutory Authority: RCW 70.42.005 and 42 C.F.R. Part 493. 05-04-040, § 246-338-050, filed 1/27/05, effective 3/19/05. Statutory Authority: RCW 70.42.005, 70.42.060 and chapter 70.42 RCW. 00-06-079, § 246-338-050, filed 3/1/00, effective 4/1/00. Statutory Authority: Chapter 70.42 RCW. 94-17-099, § 246-338-050, filed 8/17/94, effective 9/17/94; 93-18-091 (Order 390), § 246-338-050, filed 9/1/93, effective 10/2/93; 91-21-062 (Order 205), § 246-338-050, filed 10/16/91, effective 10/16/91. Statutory Authority: RCW 43.70.040. 91-02-049 (Order 121), recodified as § 246-338-050, filed 12/27/90, effective 1/31/91. Statutory Authority: Chapter 70.42 RCW. 90-20-017 (Order 090), § 248-38-050, filed 9/21/90, effective 10/22/90.]

WAC 246-338-060 Personnel. (1) Medical test site owners must:

(a) Have a director responsible for the overall technical supervision and management of the test site personnel including oversight of the performance of test procedures and reporting of test results;

(b) Have technical personnel, competent to perform tests and report test results; and

(c) Meet the standards for personnel qualifications and responsibilities in compliance with federal regulation, as listed in 42 CFR Part 493 Subpart M - Personnel for Nonwaived Testing.

(2) The department will furnish a copy of 42 CFR Part 493 Subpart M upon request.

(3) Medical test site directors must:

(a) Establish and approve policies for:

(i) Performing, recording, and reporting of tests;

(ii) Maintaining an ongoing quality assurance program;

(iii) Supervision of testing; and

(iv) Compliance with chapter 70.42 RCW and this chapter;

(b) Evaluate, verify, and document the following related to technical personnel:

(i) Education, experience, and training in test performance and reporting test results;

(ii) Sufficient numbers to cover the scope and complexity of the services provided;

(iii) Access to training appropriate for the type and complexity of the test site services offered; and

(iv) Maintenance of competency to perform test procedures and report test results;

(c) Be present, on call, or delegate the duties of the director to an on-site technical person during testing.

[Statutory Authority: RCW 70.42.005 and 42 C.F.R. Part 493. 05-04-040, § 246-338-060, filed 1/27/05, effective 3/19/05. Statutory Authority: RCW 70.42.005, 70.42.060. 01-02-069, § 246-338-060, filed 12/29/00, effective 1/29/01. Statutory Authority: RCW 70.42.005, 70.42.060 and chapter 70.42 RCW. 00-06-079, § 246-338-060, filed 3/1/00, effective 4/1/00. Statutory Authority: RCW 70.42.005. 97-14-113, § 246-338-060, filed 7/2/97, effective 8/2/97. Statutory Authority: Chapter 70.42 RCW. 93-18-091 (Order 390), § 246-338-060, filed 9/1/93, effective 10/2/93; 91-21-062 (Order 205), § 246-338-060, filed 10/16/91, effective 10/16/91. Statutory Authority: RCW 43.70.040. 91-02-049 (Order 121), recodified as § 246-338-060, filed 12/27/90, effective 1/31/91. Statutory Authority: Chapter 70.42 RCW. 90-20-017 (Order 090), § 248-38-060, filed 9/21/90, effective 10/22/90.]

WAC 246-338-070 Records. Medical test sites must maintain records as described in this section.

(1) REQUISITIONS must include the following information, in written or electronic form:

(a) Patient name, identification number, or other method of patient identification;

(b) Name and address or other suitable identifiers of the authorized person ordering the test;

(c) Date of specimen collection, and time, if appropriate;

(d) Source of specimen, if appropriate;

(e) Type of test ordered;

(f) Sex, and age or date of birth, of the patient; and

(g) For cytology and histopathology specimens:

(i) Pertinent clinical information; and

(ii) For Pap smears:

(A) Date of last menstrual period; and

(B) Indication whether the patient had a previous abnormal report, treatment, or biopsy.

(2) TEST RECORD SYSTEMS must:

(a) Consist of instrument printouts, worksheets, accession logs, corrective action logs, and other records that ensure reliable identification of patient specimens as they are processed and tested to assure that accurate test results are reported; and

(b) Include:

(i) The patient's name or other method of specimen identification;

(ii) The date and time the specimen was received;

(iii) The reason for specimen rejection or limitation;

(iv) The date of specimen testing; and

(v) The identification of the personnel who performed the test.

(3) TEST REPORTS must:

(a) Be maintained in a manner permitting identification and reasonable accessibility;

(b) Be released only to authorized persons or designees;

(c) Include:

(i) Name and address of the medical test site, or where applicable, the name and address of each medical test site performing each test;

(ii) Patient's name and identification number, or a unique patient identifier and identification number;

(iii) Date reported;

(iv) Time reported, if appropriate;

(v) Specimen source, when appropriate, and any information regarding specimen rejection or limitation; and

(vi) Name of the test performed, test result, and units of measurement, if applicable.

(4) CYTOLOGY REPORTS must:

(a) Distinguish between unsatisfactory specimens and negative results;

(b) Provide narrative descriptions for any abnormal results, such as the 2001 Bethesda system of terminology as published in the Journal of the *American Medical Association*, 2002, Volume 287, pages 2114-2119; and

(c) Include the signature or initials of the technical supervisor, or an electronic signature authorized by the technical supervisor, for nongynecological preparations and gynecological preparations interpreted to be showing reactive or reparative changes, atypical squamous or glandular cells of undetermined significance, or to be in the premalignant (dysplasia, cervical intraepithelial neoplasia or all squamous intraepithelial neoplasia lesions including human papillomavirus-associated changes) or malignant category.

(5) HISTOPATHOLOGY REPORTS must include the signature or initials of the technical supervisor or an electronic signature authorized by the technical supervisor on all reports.

(6) CYTOGENETICS REPORTS must:

(a) Use the International System for Human Cytogenetic Nomenclature on final reports;

(b) Include the number of cells counted and analyzed; and

(c) Include a summary and interpretation of the observations.

(7) If a specimen is referred to another laboratory for testing, the medical test site must:

(a) Report the essential elements of the referred test results without alterations that could affect the clinical interpretation of the results; and

(b) Retain or be able to produce an exact duplicate of each testing report from the referral laboratory.

(8) The medical test site must retain records, slides, and tissues as described in Table 070-1, under storage conditions that ensure proper preservation.

(9) If the medical test site ceases operation, it must make provisions to ensure that all records and, as applicable, slides, blocks and tissue are retained and available for the time frames specified in Table 070-1.

Table 070-1 Record/Slide/Tissue Retention Schedule

	Two Years	Five Years	Ten Years
(a) General Requirements for all Laboratory Specialties	• Test requisitions or equivalent; • Test records, including instrument printouts if applicable; • Test reports; • Quality control records; • Quality assurance records; • Proficiency testing records; • Hard copy of report, or ability to reproduce a copy, for all specimens referred for testing; and • Discontinued procedures for all specialty areas		
(b) Transfusion Services*		• Test requisitions or equivalent; • Test records; • Test reports; • Quality control records; and • Quality assurance records	
(c) Cytology		• All cytology slides, from date of examination of the slide	• All cytology reports

		Two Years	Five Years	Ten Years
(d)	Histopathology/Oral Pathology	• Specimen blocks, from date of examination		• All histopathology and oral pathology • reports; and Stained slides, from date of examination of the slide
(e)	Histopathology/Oral Pathology-Tissues	Retain remnants of tissue specimens in an appropriate preserved state until the portions submitted for microscopic examination have been examined and diagnosed		
(f)	Instrument/method Validation Studies	For life of instrument/method plus two years		

* Must be retained for no less than five years in accordance with 21 CFR 606.160(d).

[Statutory Authority: RCW 70.42.005 and 42 C.F.R. Part 493. 05-04-040, § 246-338-070, filed 1/27/05, effective 3/19/05. Statutory Authority: RCW 70.42.005, 70.42.060. 01-02-069, § 246-338-070, filed 12/29/00, effective 1/29/01. Statutory Authority: RCW 70.42.005, 70.42.060 and chapter 70.42 RCW. 00-06-079, § 246-338-070, filed 3/1/00, effective 4/1/00. Statutory Authority: RCW 70.42.005. 97-14-113, § 246-338-070, filed 7/2/97, effective 8/2/97. Statutory Authority: Chapter 70.42 RCW. 93-18-091 (Order 390), § 246-338-070, filed 9/1/93, effective 10/2/93; 91-21-062 (Order 205), § 246-338-070, filed 10/16/91, effective 10/16/91. Statutory Authority: RCW 43.70.040. 91-02-049 (Order 121), recodified as § 246-338-070, filed 12/27/90, effective 1/31/91. Statutory Authority: Chapter 70.42 RCW. 90-20-017 (Order 090), § 248-38-070, filed 9/21/90, effective 10/22/90.]

WAC 246-338-080 Quality assurance. Each medical test site performing moderate complexity (including PPMP) or high complexity testing, or any combination of these tests, must establish and follow written policies and procedures for a comprehensive quality assurance program. The quality assurance program must be designed to monitor and evaluate the ongoing and overall quality of the total testing process (preanalytic, analytic, postanalytic). The medical test site's quality assurance program must evaluate the effectiveness of its policies and procedures; identify and correct problems; assure the accurate, reliable, and prompt reporting of test results; and assure the adequacy and competency of the staff. As necessary, the medical test site must revise policies and procedures based upon the results of those evaluations. The medical test site must meet the standards as they apply to the services offered, complexity of testing performed and test results reported, and the unique practices of each testing entity. All quality assurance activities must be documented.

(1) The medical test site must establish and implement a written quality assurance plan, including policies and procedures, designed to:

(a) Monitor, evaluate, and review quality control data, proficiency testing results, and test results, including biannual verification of:

(i) Accuracy of test results for:

(A) Tests that are not covered by proficiency testing;

(B) Tests that are covered by proficiency testing but have unsatisfactory scores, are not scored by the proficiency testing program, or where scoring does not reflect actual test performance (e.g., the proficiency testing program does not obtain the agreement required for scoring); and

(ii) Relationship between test results when the medical test site performs the same test on different instruments or at different locations within the medical test site;

(b) Identify and correct problems;

(c) Establish and maintain accurate, reliable, and prompt reporting of test results;

(d) Verify all tests performed and reported by the medical test site conform to specified performance criteria in quality control under WAC 246-338-090;

(e) Establish and maintain the adequacy and competency of the technical personnel; and

(f) Establish and follow written policies and procedures that ensure positive identification and optimum integrity of a patient's specimen from the time of collection or receipt of the specimen through completion of testing and reporting of results.

(2) The quality assurance plan must include mechanisms or systems to:

(a) Establish and apply criteria for specimen acceptance and rejection;

(b) Notify the appropriate individuals as soon as possible when test results indicate potential life-threatening conditions;

(c) Assess problems identified during quality assurance reviews and discuss them with the appropriate staff;

(d) Evaluate all test reporting systems to verify accurate and reliable reporting, transmittal, storage, and retrieval of data;

(e) Document all action taken to identify and correct problems or potential problems;

(f) Issue corrected reports when indicated;

(g) Provide appropriate instructions for specimen collection, handling, preservation, and transportation;

(h) Ensure that specimens are properly labeled, including patient name or unique patient identifier and, when appropriate, specimen source;

(i) Ensure confidentiality of patient information throughout all phases of the testing process; and

(j) Provide clients updates of testing changes that would affect test results or the interpretation of test results.

(3) The medical test site must establish criteria for and maintain appropriate documentation of any remedial action taken in response to quality control, quality assurance, personnel, proficiency testing, and transfusion reaction investigations.

(4) When results of control or calibration materials fail to meet the established criteria for acceptability, the medical test site must have a system in place to determine if patient test results have been adversely affected. The system must include:

(a) A review of all patient test results obtained in the unacceptable test run; and

(b) A review of all patient test results since the last acceptable test run.

(5) The medical test site must have a system in place to assure:

(a) All complaints and problems reported to the medical test site are documented and investigated when appropriate; and

(b) Corrective actions are instituted as necessary.

(6) The owner must:

(a) Maintain adequate space, facilities, and essential utilities for the performance and reporting of tests;

(b) Ensure that molecular amplification procedures that are not contained in closed systems have a unidirectional workflow. This must include separate areas for specimen preparation, amplification and production detection, and as applicable, reagent preparation;

(c) Establish, make accessible, and observe safety precautions to ensure protection from physical, chemical, biochemical, and electrical hazards and biohazards; and

(d) Establish and implement policies and procedures for infectious and hazardous medical wastes consistent with local, state, and federal authorities.

(7) Information that must be available to authorized persons ordering or utilizing the test results includes:

(a) A list of test methods, including performance specifications;

(b) Reference ranges; and

(c) Test method limitations.

(8) If the medical test site refers specimens to another site for testing, the site to which specimens are referred must have a valid medical test site license or meet equivalent requirements as determined by CMS.

[Statutory Authority: RCW 70.42.005 and 42 C.F.R. Part 493. 05-04-040, § 246-338-080, filed 1/27/05, effective 3/19/05. Statutory Authority: RCW 70.42.005, 70.42.060 and chapter 70.42 RCW. 00-06-079, § 246-338-080, filed 3/1/00, effective 4/1/00. Statutory Authority: Chapter 70.42 RCW. 93-18-091 (Order 390), § 246-338-080, filed 9/1/93, effective 10/2/93; 91-21-062 (Order 205), § 246-338-080, filed 10/16/91, effective 10/16/91. Statutory Authority: RCW 43.70.040. 91-02-049 (Order 121), recodified as § 246-338-080, filed 12/27/90, effective 1/31/91. Statutory Authority: Chapter 70.42 RCW. 90-20-017 (Order 090), § 248-38-080, filed 9/21/90, effective 10/22/90.]

WAC 246-338-090 Quality control. The medical test site must use quality control procedures, providing and assuring accurate and reliable test results and reports, meeting the requirements of this chapter.

(1) The medical test site must have written procedures and policies available in the work area for:

(a) Analytical methods used by the technical personnel including:

(i) Principle;

(ii) Specimen collection and processing procedures;

(iii) Equipment/reagent/supplies required;

(iv) Preparation of solutions, reagents, and stains;

(v) Test methodology;

(vi) Quality control procedures;

(vii) Procedures for reporting results (normal, abnormal, and critical values);

(viii) Reference range;

(ix) Troubleshooting guidelines - limitations of methodology;

(x) Calibration procedures; and

(xi) Pertinent literature references; and

(b) Alternative or backup methods for performing tests including the use of a reference facility if applicable.

(2) The medical test site must establish written criteria for and maintain appropriate documentation of:

(a) Temperature-controlled spaces and equipment;

(b) Preventive maintenance activities;

(c) Equipment function checks;

(d) Procedure calibrations; and

(e) Method/instrument validation procedures.

(3) The medical test site must maintain documentation of:

(a) Expiration date, lot numbers, and other pertinent information for:

(i) Reagents;

(ii) Solutions;

(iii) Culture media;

(iv) Controls;

(v) Calibrators;

(vi) Standards;

(vii) Reference materials; and

(viii) Other testing materials; and

(b) Testing of quality control samples.

(4) For **quantitative tests,** the medical test site must perform quality control as follows:

(a) Include two reference materials of different concentrations each day of testing unknown samples, if these reference materials are available; or

(b) Follow an equivalent quality testing procedure that meets federal CLIA regulations.

(5) For **qualitative tests,** the medical test site must perform quality control as follows:

(a) Use positive and negative reference material each day of testing unknown samples; or

(b) Follow an equivalent quality testing procedure that meets federal CLIA regulations.

(6) The medical test site must:

(a) Use materials within their documented expiration date;

(b) Not interchange components of kits with different lot numbers, unless specified by the manufacturer;

(c) Determine the statistical limits for each lot number of unassayed reference materials through repeated testing;

(d) Use the manufacturer's reference material limits for assayed material, provided they are:

(i) Verified by the medical test site; and

(ii) Appropriate for the methods and instrument used by the medical test site;

(e) Make reference material limits readily available;

(f) Report patient results only when reference materials are within acceptable limits; and

(g) Rotate control material testing among all persons who perform the test;

(h) Use calibration material from a different lot number than that used to establish a cut-off value or to calibrate the test system, if using calibration material as a control material; and

(i) Comply with general quality control requirements as described in Table 090-1, unless otherwise specified in subsection (9)(a) through (l) of this section.

(7) The medical test site must perform, when applicable:

(a) Calibration and calibration verification for **moderate and high complexity testing** as described in Table 090-2;

(b) Validation for **moderate complexity testing** by verifying the following performance characteristics when the medical test site introduces a new procedure classified as moderate complexity:

(i) Accuracy;

(ii) Precision;

(iii) Reportable range of patient test results; and

(iv) If using the reference range provided by the manufacturer, that it is appropriate for the patient population;

(c) Validation for **high complexity testing:**

(i) When the medical test site introduces a new procedure classified as high complexity;

(ii) For each method that is developed in-house, is a modification of the manufacturer's test procedure, or is an instrument, kit or test system that has not been cleared by FDA; and

(iii) By verifying the following performance characteristics:

(A) Accuracy;

(B) Precision;

(C) Analytical sensitivity;

(D) Analytical specificity to include interfering substances;

(E) Reference ranges (normal values);

(F) Reportable range of patient test results; and

(G) Any other performance characteristic required for test performance.

(8) When patient values are above the maximum or below the minimum calibration point or the reportable range, the medical test site must:

(a) Report the patient results as greater than the upper limit or less than the lower limit or an equivalent designation; or

(b) Use an appropriate procedure to rerun the sample allowing results to fall within the established linear range.

Table 090-1 General Quality Control Requirements

		Control Material	Frequency
(a)	Each batch or shipment of reagents, discs, antisera, and identification systems	• Appropriate control materials for positive and negative reactivity	• When prepared or opened, unless otherwise specified
(b)	Each batch or shipment of stains	• Appropriate control materials for positive and negative reactivity	• When prepared or opened; and • Each day of use, unless otherwise specified
(c)	Fluorescent and immunohistochemical stains	• Appropriate control materials for positive and negative reactivity	• Each time of use, unless otherwise specified
(d)	Quality control for each specialty and subspecialty	• Appropriate control materials; or • Equivalent mechanism to assure the quality, accuracy, and precision of the test if reference materials are not available	• At least as frequently as specified in this section; • More frequently if recommended by the manufacturer of the instrument or test procedure; or • More frequently if specified by the medical test site
(e)	Direct antigen detection systems without procedural controls	• Positive and negative controls that evaluate both the extraction and reaction phase	• Each batch, shipment, and new lot number; and • Each day of use

Table 090-2 Calibration and Calibration Verification—Moderate and High Complexity Testing

	Calibration Material	Frequency
CALIBRATION	• Calibration materials appropriate for methodology	• Initial on-site installation/implementation of instrument/method; • At the frequency recommended by the manufacturer; and • Whenever calibration verification fails to meet the medical test site's acceptable limits for calibration verification.
CALIBRATION VERIFICATION	• Use assayed material, if available, at the lower, mid-point, and upper limits of procedure's reportable range; or • Demonstrate alternate method of assuring accuracy at the lower, mid-point, and upper limits of procedure's reportable range	• At least every six months; • When there is a complete change of reagents (i.e., new lot number or different manufacturer) is introduced; • When major preventive maintenance is performed or there is a replacement of critical parts of equipment; or • When controls are outside of the medical test site's acceptable limits or exhibit trends.

(9) The medical test site must perform quality control procedures as described for each specialty and subspecialty in (a) through (l) of this subsection.

(a) **Chemistry.**

Perform quality control procedures for chemistry as described in Table 090-3 or follow an equivalent quality testing procedure that meets federal CLIA regulations.

Table 090-3 Quality Control Procedures—Chemistry

Subspecialty/Test	Qualitative		Quantitative	
	Control Material	Frequency	Control Material	Frequency
Routine Chemistry	• Positive and negative reference material	• Each day of use	• Two levels of reference material in different concentrations	• Each day of use
Toxicology • GC/MS for drug screening • Urine drug screen	• Analyte-specific control • Positive control containing at least one drug representative of each drug class to be reported; must go through each phase of use including extraction	• With each run of patient specimens • With each run of patient specimens	• Analyte-specific control	• With each analytical run
Urinalysis • Nonwaived instrument • Refractometer for specific gravity			• Two levels of control material • Calibrate to zero with distilled water • One level of control material	• Each day of use • Each day of use
Blood Gas Analysis			• Calibration • One level of control material • One-point calibration or one control material	• Follow manufacturer's specifications and frequency • Each eight hours of testing, using both low and high values on each day of testing • Each time patient specimen is tested, unless automated instrument internally verifies calibration every thirty minutes
Electrophoresis	• One control containing fractions representative of those routinely reported in patient specimens	• In each electrophoretic cell	• One control containing fractions representative of those routinely reported in patient specimens	• In each electrophoretic cell

(b) **Hematology.**

(i) Run patient and quality control samples in duplicate for manual cell counts;

(ii) If reference material is unavailable, document the mechanism used to assure the quality, accuracy, and precision of the test; and

(iii) Perform quality control procedures for hematology as described in Table 090-4 or follow an equivalent quality testing procedure that meets federal CLIA regulations.

Table 090-4 Quality Control Procedures—Hematology

	Control Material	Frequency
Automated	• Two levels of reference material in different concentrations	• Each day that patient samples are tested
Manual Blood Counts	• One level of reference material	• Every eight hours that patient samples are tested
Qualitative Tests	• Positive and negative reference material	• Each day of testing

(c) **Coagulation.**

(i) Run patient and quality control samples in duplicate for manual coagulation test (tilt tube);

(ii) If reference material is unavailable, document the mechanism used to assure the quality, accuracy, and precision of the test; and

(iii) Perform quality control procedures for coagulation as described in Table 090-5 or follow an equivalent quality testing procedure that meets federal CLIA regulations.

Table 090-5 Quality Control Procedures—Coagulation

	Control Material	Frequency
Automated	• Two levels of reference material in different concentrations	• Every eight hours that patient samples are tested; and • Each time reagents are changed
Manual Tilt Tube Method	• Two levels of reference material in different concentrations	• Every eight hours that patient samples are tested; and • Each time reagents are changed

(d) **General immunology.**

(i) Employ reference materials for all test components to ensure reactivity;

(ii) Report test results only when the predetermined reactivity pattern of the reference material is observed; and

(iii) Perform quality control procedures for general immunology as described in Table 090-6 or follow an equivalent quality testing procedure that meets federal CLIA regulations.

Table 090-6 Quality Control Procedures—General Immunology

	Control Material	Frequency
Serologic tests on unknown specimens	• Positive and negative reference material	• Each day of testing
Kits with procedural (internal) controls	• Positive and negative reference material (external controls) • Procedural (internal) controls	• When kit is opened; and • Each day of testing, or follow an equivalent quality testing procedure that meets federal CLIA regulations • Each time patient sample is tested

(e) **Syphilis serology.**

(i) Use equipment, glassware, reagents, controls, and techniques that conform to manufacturer's specifications;

(ii) Employ reference materials for all test components to ensure reactivity; and

(iii) Perform serologic tests on unknown specimens each day of testing with a positive serum reference material with known titer or graded reactivity and a negative reference material.

(f) **Microbiology.**

(i) Have available and use:

(A) Appropriate stock organisms for quality control purposes; and

(B) A collection of slides, photographs, gross specimens, or text books for reference sources to aid in identification of microorganisms;

(ii) Document all steps (reactions) used in the identification of microorganisms on patient specimens;

(iii) For antimicrobial susceptibility testing:

(A) Record zone sizes or minimum inhibitory concentration for reference organisms; and

(A) **Bacteriology:** Perform quality control procedures

(B) Zone sizes or minimum inhibitory concentration for reference organisms must be within established limits before reporting patient results; and

(C) Perform quality control on antimicrobial susceptibility testing media as described in Table 090-8;

(iv) For noncommercial media, check each batch or shipment for sterility, ability to support growth and, if appropriate, selectivity, inhibition, or biochemical response;

(v) For commercial media:

(A) Verify that the product insert specifies that the quality control checks meet the requirements for media quality control as outlined by the NCCLS, Quality Assurance for Commercially Prepared Microbiological Culture Media-Second Edition; Approved Standard (1996);

(B) Keep records of the manufacturer's quality control results;

(C) Document visual inspection of the media for proper filling of the plate, temperature or shipment damage, and contamination before use; and

(D) Follow the manufacturer's specifications for using the media; and

(vi) For microbiology subspecialties:

for bacteriology as described in Tables 090-7 and 090-8.

Table 090-7 Quality Control Procedures—Bacteriology

	Control Material	Frequency
Reagents, disks, and identification systems Catalase, coagulase, oxidase, and Beta-lactamase Cefinase™ reagents Bacitracin, optochin, ONPG, X and V disks or strips	• Positive and negative reference organisms, unless otherwise specified	• Each batch, shipment, and new lot number unless otherwise specified
Stains, unless otherwise specified; DNA probes; and all beta-lactamase methods other than Cefinase™	• Positive and negative reference organisms	• Each batch, shipment, and new lot number; and • Each day of use
Fluorescent stains	• Positive and negative reference organisms	• Each batch, shipment, and new lot number; and • Each time of use
Gram stains	• Positive and negative reference organisms	• Each batch, shipment, and new lot number; and • Each week of use
Direct antigen detection systems without procedural controls	• Positive and negative controls that evaluate both the extraction and reaction phase	• Each batch, shipment, and new lot number; and • Each day of use
Test kits with procedural (internal) controls	• Positive and negative reference material (external) controls • Procedural (internal) controls	• Each batch, shipment, and new lot number; and • Each day of testing, or follow an equivalent quality testing procedure that meets federal CLIA regulations • Each time patient sample is tested
Antisera	• Positive and negative reference material	• Each batch, shipment, and new lot number; and • Every six months

Table 090-8 Quality Control Procedures—Bacteriology - Media for Antimicrobial Susceptibility Testing

	Control Material	Frequency
Check each new batch of media and each new lot of antimicrobial disks or other testing systems (MIC)	• Approved reference organisms (ATCC organisms)	• Before initial use and each day of testing; or • May be done weekly if the medical test site can meet the quality control requirements for antimicrobial disk susceptibility testing as outlined by NCCLS Performance Standards for Antimicrobial Disk Susceptibility Tests-Eighth Edition; Approved Standard (2003)

(B) **Mycobacteriology:** Perform quality control procedures for mycobacteriology as described in Table 090-9.

Table 090-9 Quality Control Procedures—Mycobacteriology

	Control Material	Frequency
All reagents or test procedures used for mycobacteria identification unless otherwise specified	• Acid-fast organism that produces a positive reaction and an acid-fast organism that produces a negative reaction	• Each day of use
Acid-fast stains	• Acid-fast organism that produces a positive reaction and an organism that produces a negative reaction	• Each day of use
Fluorochrome acid-fast stains	• Acid-fast organism that produces a positive reaction and an acid-fast organism that produces a negative reaction	• Each time of use

	Control Material	Frequency
Susceptibility tests performed on *Mycobacterium tuberculosis* isolates	• Appropriate control organism(s)	• Each batch of media, and each lot number and shipment of anti-mycobacterial agent(s) before, or concurrent with, initial use • Each week of use

(C) **Mycology:** Perform quality control procedures for mycology as described in Table 090-10.

Table 090-10 Quality Control Procedures—Mycology

	Control Material	Frequency
Susceptibility tests: Each drug NOTE: Establish control limits and criteria for acceptable control results prior to reporting patient results	• One control strain that is susceptible to the drug	• Each day of use
Lactophenol cotton blue stain	• Appropriate control organism(s)	• Each batch or shipment and each lot number
Acid-fast stains	• Organisms that produce positive and negative reactions	• Each day of use
Reagents for biochemical and other identification test procedures	• Appropriate control organism(s)	• Each batch or shipment and each lot number
Commercial identification systems utilizing two or more substrates	• Organisms that verify positive and negative reactivity of each media type	• Each batch or shipment and each lot number

(D) **Parasitology:**

(I) Have available and use:

• Reference collection of slides or photographs and, if available, gross specimens for parasite identification; and

• Calibrated ocular micrometer for determining the size of ova and parasites, if size is a critical parameter.

(II) Check permanent stains each month of use with reference materials.

(E) **Virology:**

(I) Have available:

• Host systems for isolation of viruses; and

• Test methods for identification of viruses that cover the entire range of viruses that are etiologically related to the clinical diseases for which services are offered; and

(II) Simultaneously culture uninoculated cells or cell substrate as a negative control when performing virus identification.

(g) **Histopathology:** Include a control slide of known reactivity with each slide or group of slides for differential or special stains and document reactions.

(h) **Cytology.**

(i) Processing specimens:

(A) Stain all gynecological smears using a Papanicolaou or a modified Papanicolaou staining method;

(B) Have methods to prevent cross-contamination between gynecologic and nongynecologic specimens during the staining process; and

(C) Stain nongynecological specimens that have a high potential for cross-contamination separately from other nongynecological specimens, and filter or change the stains following staining.

(ii) Performing specimen examinations:

(A) All cytology preparations must be evaluated on the premises of the medical test site;

(B) Technical personnel must examine, unless federal law and regulation specify otherwise, no more than one hundred cytological slides (one patient specimen per slide; gynecologic, nongynecologic, or both) in a twenty-four-hour period and in no less than an eight-hour work period;

(C) Previously examined negative, reactive, reparative, atypical, premalignant or malignant gynecological cases and previously examined nongynecologic cytology preparations and tissue pathology slides examined by a technical supervisor are not included in the one hundred slide limit;

(D) Each nongynecologic slide preparation made using liquid-based slide preparatory techniques that result in cell dispersion over one-half or less of the total available slide may be counted as one-half slide; and

(E) Records of the total number of slides examined by each individual at all sites during each twenty-four-hour period must be maintained.

(iii) Establish and implement a quality assurance program that ensures:

(A) There is criteria for submission of material;

(B) All providers submitting specimens are informed of these criteria;

(C) All samples submitted are assessed for adequacy;

(D) Records of initial examinations and rescreening results are available and documented;

(E) Rescreening of benign gynecological slides is:

(I) Performed by an individual who meets the personnel requirements for technical or general supervisor in cytology as defined under 42 CFR Part 493 Subpart M;

(II) Completed before reporting patient results on those selected cases;

(III) Performed and documented on:

• No less than ten percent of the benign gynecological slides; and

• Includes cases selected at random from the total caseload and from patients or groups of patients that are identified as having a high probability of developing cervical cancer, based on available patient information;

(F) The technical supervisor:

(I) Confirms all gynecological smears interpreted to be showing reactive or reparative changes, atypical squamous or glandular cells of undetermined significance, or to be in the premalignant (dysplasia, cervical intraepithelial neoplasia or all squamous intraepithelial neoplasia lesions including human papillomavirus-associated changes) or malignant category;

(II) Reviews all nongynecological cytological preparations; and

(III) Establishes, documents, and reassesses, at least every six months, the workload limits for each cytotechnologist;

(G) All cytology reports with a diagnosis of high-grade squamous intraepithelial lesion (HSIL), adenocarcinoma, or other malignant neoplasms are correlated with prior cytology reports and with histopathology reports if available, and the causes of any discrepancies are determined;

(H) Review of all normal or negative gynecological specimens received within the previous five years, if available in the laboratory system, or records of previous reviews, for each patient with a current high grade intraepithelial lesion or moderate dysplasia of CIN-2 or above;

(I) Notification of the patient's physician if significant discrepancies are found that would affect patient care and issuance of an amended report;

(J) An annual statistical evaluation of the number of cytology cases examined, number of specimens processed by specimen type, volume of patient cases reported by diagnosis, number of cases where cytology and histology are discrepant, number of cases where histology results were unavailable for comparison, and number of cases where rescreen of negative slides resulted in reclassification as abnormal; and

(K) Evaluation and documentation of the performance of each individual examining slides against the medical test site's overall statistical values, with documentation of any discrepancies, including reasons for the deviation and corrective action, if appropriate.

(i) **Immunohematology/transfusion services.**

(i) Perform ABO grouping, Rh (D) typing, antibody detection and identification, and compatibility testing as described by the Food and Drug Administration (FDA) under 21 CFR Parts 606 and 640.

(A) Perform ABO grouping:

(I) By concurrently testing unknown red cells with FDA approved anti-A and anti-B grouping sera;

(II) Confirm ABO grouping of unknown serum with known A1 and B red cells;

(B) Perform Rh (D) typing by testing unknown red cells with anti-D (anti-Rh) blood grouping serum; and

(C) Perform quality control procedures for immunohematology as described in Table 090-11.

(ii) Blood and blood products:

(A) Collecting, processing, and distributing:

(I) Must comply with FDA requirements listed under 21 CFR Parts 606, 610.40, 610.53, and 640; and

(II) Must establish, document, and follow policies to ensure positive identification of a blood or blood product recipient.

(B) Labeling and dating must comply with FDA requirements listed under 21 CFR 606 Subpart G, and 610.53.

(C) Storing:

(I) There must be an adequate temperature alarm system that is regularly inspected.

(II) The system must have an audible alarm system that monitors proper blood and blood product storage temperature over a twenty-four-hour period.

(III) High and low temperature checks of the alarm system must be documented.

(D) Collection of heterologous or autologous blood products on-site:

(I) Must register with the FDA; and

(II) Have a current copy of the form FDA 2830 "Blood Establishment Registration and Product Listing."

(iii) Must have an agreement approved by the director for procurement, transfer, and availability to receive products from outside entities.

(iv) Promptly investigate transfusion reactions according to established procedures, and take any necessary remedial action.

Table 090-11 Quality Control Procedures—Immunohematology

Reagent	Control Material	Frequency
ABO antisera	• Positive control	• Each day of use
Rh antisera	• Positive and negative controls	• Each day of use
	• Patient control to detect false positive Rh test results	• When required by the manufacturer
Other antisera	• Positive and negative controls	• Each day of use
ABO reagent red cells	• Positive control	• Each day of use
Antibody screening cells	• Positive control using at least one known antibody	• Each day of use

(j) **Histocompatibility.**

(i) Use applicable quality control standards for immunohematology, transfusion services, and diagnostic immunology as described in this chapter; and

(ii) Meet the standards for histocompatibility as listed in 42 CFR Part 493.1278, Standard: Histocompatibility, available from the department upon request.

(k) **Cytogenetics.**

(i) Document:

(A) Number of metaphase chromosome spreads and cells counted and karyotyped;

(B) Number of chromosomes counted for each metaphase spread;

(C) Media used;

(D) Reactions observed;

(E) Quality of banding; and

(F) Sufficient resolution appropriate for the type of tissue or specimen and the type of study required based on the clinical information provided;

(ii) Assure an adequate number of karyotypes are prepared for each patient according to the indication given for performing cytogenetics study;

(iii) Use an adequate patient identification system for:

(A) Patient specimens;

(B) Photographs, photographic negatives, or computer stored images of metaphase spreads and karyotypes;

(C) Slides; and

(D) Records; and

(iv) Perform full chromosome analysis for determination of sex.

(l) **Radiobioassay and radioimmunoassay.**

(i) Check the counting equipment for stability each day of use with radioactive standards or reference sources; and

(ii) Meet Washington state radiation standards described under chapter 70.98 RCW and chapters 246-220, 246-221, 246-222, 246-232, 246-233, 246-235, 246-239, 246-247, 246-249, and 246-254 WAC.

[Statutory Authority: RCW 70.42.005 and 42 C.F.R. Part 493. 05-04-040, § 246-338-090, filed 1/27/05, effective 3/19/05. Statutory Authority: RCW 70.42.005, 70.42.060. 01-02-069, § 246-338-090, filed 12/29/00, effective 1/29/01. Statutory Authority: RCW 70.42.005, 70.42.060 and chapter 70.42 RCW. 00-06-079, § 246-338-090, filed 3/1/00, effective 4/1/00. Statutory Authority: RCW 70.42.005. 97-14-113, § 246-338-090, filed 7/2/97, effective 8/2/97. Statutory Authority: Chapter 70.42 RCW. 93-18-091 (Order 390), § 246-338-090, filed 9/1/93, effective 10/2/93; 91-21-062 (Order 205), § 246-338-090, filed 10/16/91, effective 10/16/91. Statutory Authority: RCW 43.70.040. 91-02-049 (Order 121), recodified as § 246-338-090, filed 12/27/90, effective 1/31/91. Statutory Authority: Chapter 70.42 RCW. 90-20-017 (Order 090), § 248-38-090, filed 9/21/90, effective 10/22/90.]

WAC 246-338-100 Disciplinary action. (1) Pursuant to chapter 34.05 RCW, the department may deny a license to any applicant, or condition, suspend, or revoke the license of any licensee, or in addition to or in lieu thereof, assess monetary penalties of up to ten thousand dollars per violation, if the applicant or licensee:

(a) Fails or refuses to comply with the requirements of chapter 70.42 RCW or the rules adopted under chapter 70.42 RCW;

(b) Knowingly, or with reason to know, makes a false statement of a material fact in the application for a license or in any data attached thereto or in any record required by the department;

(c) Refuses to allow representatives of the department to examine any book, record, or file required under this chapter;

(d) Willfully prevents, interferes with, or attempts to impede in any way, the work of a representative of the department; or

(e) Misrepresents or is fraudulent in any aspect of the owner's or applicant's business.

(2) The department may impose the sanctions enumerated in subsection (1) of this section individually or in any combination.

(3) The sanction shall be as specified for the following described conduct. If more than one sanction is listed, the department may impose the sanction individually or in any combination:

(a) If the applicant was the holder of a license under chapter 70.42 RCW which was revoked for cause and never reissued by the department, then the license application may be denied;

(b) If the licensee willfully prevents or interferes with preservation of evidence of a known violation of chapter 70.42 RCW or the rules adopted under this chapter, a monetary penalty not exceeding ten thousand dollars per violation may be assessed or the license may be:

(i) Conditioned in a manner limiting or canceling the authority to conduct tests or groups of tests;

(ii) Suspended;

(iii) Revoked;

(c) If the licensee used false or fraudulent advertising, a monetary penalty not exceeding ten thousand dollars per violation may be assessed or the license may be suspended or revoked;

(d) If the licensee failed to pay any civil monetary penalty assessed by the department under chapter 70.42 RCW within twenty-eight days after the assessment becomes final, the license may be suspended or revoked;

(e) If the licensee intentionally referred its proficiency testing samples to another medical test site or laboratory for analysis, the license will be revoked for a period of at least one year and a monetary penalty not exceeding ten thousand dollars per violation may be assessed.

(4) The department may summarily suspend or revoke a license when the department finds continued licensure of a test site immediately jeopardizes the public health, safety, or welfare.

(5) The department will give written notice of any disciplinary action taken by the department to the owner or applicant for licensure, including notice of the opportunity for a hearing.

[Statutory Authority: RCW 70.42.005, 70.42.060 and chapter 70.42 RCW. 00-06-079, § 246-338-100, filed 3/1/00, effective 4/1/00. Statutory Authority: RCW 70.42.005. 97-14-113, § 246-338-100, filed 7/2/97, effective 8/2/97. Statutory Authority: Chapter 70.42 RCW. 93-18-091 (Order 390), § 246-338-100, filed 9/1/93, effective 10/2/93. Statutory Authority: RCW 43.70.040. 91-02-049 (Order 121), recodified as § 246-338-100, filed 12/27/90, effective 1/31/91. Statutory Authority: Chapter 70.42 RCW. 90-20-017 (Order 090), § 248-38-100, filed 9/21/90, effective 10/22/90.]

WAC 246-338-110 Adjudicative proceedings. (1) A licensee or applicant who contests a disciplinary action shall, within twenty-eight days of service of the notice of disciplinary action, file a request for adjudicative proceeding with the Department of Health, Adjudicative Clerk, P.O. Box 47879, Olympia, WA 98504-7879.

(2) The adjudicative proceeding is governed by chapter 34.05 RCW, the Administrative Procedure Act, chapter 70.42 RCW, Medical test sites, this chapter, and chapter 246-10 WAC.

(3) Any licensee or applicant aggrieved upon issuance of the decision after the adjudicative proceeding may, within sixty days of service of the adjudicative proceeding decision, petition the superior court for review of the decision under chapter 34.05 RCW.

[Statutory Authority: RCW 70.42.005, 70.42.060 and chapter 70.42 RCW. 00-06-079, § 246-338-110, filed 3/1/00, effective 4/1/00. Statutory Authority: Chapter 70.42 RCW. 93-18-091 (Order 390), § 246-338-110, filed 9/1/93, effective 10/2/93; 91-21-062 (Order 205), § 246-338-110, filed

10/16/91, effective 10/16/91. Statutory Authority: RCW 43.70.040. 91-02-049 (Order 121), recodified as § 246-338-110, filed 12/27/90, effective 1/31/91. Statutory Authority: Chapter 70.42 RCW. 90-20-017 (Order 090), § 248-38-110, filed 9/21/90, effective 10/22/90.]

WAC 246-338-990 Fees. (1) The department will assess and collect biennial fees for medical test sites as follows:

(a) Charge fees, based on the requirements authorized under RCW 70.42.090 and this section;

(b) Assess additional fees when changes listed in WAC 246-338-026 occur that require a different type of license than what the medical test site currently holds;

(c) Charge prorated fees for the remainder of the two-year cycle when the owner or applicant applies for an initial license during a biennium as defined under WAC 246-338-022 (2)(c);

(d) Charge prorated fees for licenses issued for less than a two-year period under WAC 246-338-024(3); and

(e) Determine fees according to criteria described in Table 990-1.

Table 990-1 License Categories and Fees

Category of License	Number of Tests/Year	Biennial Fee
Certificate of Waiver	N/A	$150
PPMP	N/A	$200
Low Volume	1-2,000 tests	$450
Category A	2,001-10,000 tests, 1-3 specialties	$1,364
Category B	2,001-10,000 tests, 4 or more specialties	$1,769
Category C	10,001-25,000 tests, 1-3 specialties	$2,454
Category D	10,001-25,000 tests, 4 or more specialties	$2,818
Category E	25,001-50,000 tests	$3,382
Category F	50,001-75,000 tests	$4,187
Category G	75,001-100,000 tests	$4,991
Category H	100,001-500,000 tests	$5,835
Category I	500,001-1,000,000 tests	$10,369
Category J	> 1,000,000 tests	$12,443
Accredited:		
Low Volume	1-2,000 tests	$165
Category A	2,001-10,000 tests, 1-3 specialties	$211
Category B	2,001-10,000 tests, 4 or more specialties	$231
Category C	10,001-25,000 tests, 1-3 specialties	$531
Category D	10,001-25,000 tests, 4 or more specialties	$559
Category E	25,001-50,000 tests	$787
Category F	50,001-75,000 tests	$1,254
Category G	75,001-100,000 tests	$1,722
Category H	100,001-500,000 tests	$2,227
Category I	500,001-1,000,000 tests	$6,428
Category J	> 1,000,000 tests	$8,168
Follow-up survey for deficiencies		Direct staff time
Complaint investigation		Direct staff time

(2) The following programs are excluded from fee charges when performing only waived hematocrit or hemoglobin testing for nutritional evaluation and food distribution purposes:

(a) Women, infant and children programs (WIC); and

(b) Washington state migrant council.

[Statutory Authority: RCW 70.42.090. 06-15-132, § 246-338-990, filed 7/19/06, effective 8/19/06. Statutory Authority: RCW 70.42.090 and 2002 c 371. 02-12-105, § 246-338-990, filed 6/5/02, effective 7/6/02. Statutory Authority: RCW 70.42.005, 70.42.060. 01-02-069, § 246-338-990, filed 12/29/00, effective 1/29/01. Statutory Authority: RCW 70.42.090. 99-24-061, § 246-338-990, filed 11/29/99, effective 12/30/99; 96-12-011, § 246-338-990, filed 5/24/96, effective 6/24/96. Statutory Authority: Chapter 70.42 RCW. 94-17-099, § 246-338-990, filed 8/17/94, effective 9/17/94; 93-18-091 (Order 390), § 246-338-990, filed 9/1/93, effective 10/2/93; 91-21-062 (Order 205), § 246-338-990, filed 10/16/91, effective 10/16/91. Statutory Authority: RCW 43.70.040. 91-02-049 (Order 121), recodified as § 246-338-990, filed 12/27/90, effective 1/31/91. Statutory Authority: Chapter 70.42 RCW. 90-20-017 (Order 090), § 248-38-120, filed 9/21/90, effective 10/22/90.]

Chapter 246-358 WAC
TEMPORARY WORKER HOUSING

WAC

246-358-001 Purpose and applicability.
246-358-010 Definitions.
246-358-025 Operating license.
246-358-027 Requirements for self-survey program.
246-358-029 Maximum housing occupancy.
246-358-040 Variance and procedure.
246-358-045 Temporary worker housing sites.
246-358-055 Water supply.
246-358-065 Sewage disposal.
246-358-070 Electricity and lighting.
246-358-075 Building requirements and maintenance.
246-358-090 Laundry facilities.
246-358-095 Handwashing and bathing facilities.
246-358-100 Toilet facilities.
246-358-125 Cooking and food-handling facilities.
246-358-135 Cots, beds, bedding and personal storage.
246-358-145 First aid and safety.
246-358-155 Refuse disposal.
246-358-165 Insect and rodent control.
246-358-175 Disease prevention and control.
246-358-990 Fees.

DISPOSITION OF SECTIONS FORMERLY CODIFIED IN THIS CHAPTER

246-358-020 Exemptions. [Statutory Authority: RCW 70.54.110. 96-02-014, § 246-358-020, filed 12/21/95, effective 1/1/96; 93-03-032 (Order 326B), § 246-358-020, filed 1/12/93, effective 2/12/93.] Repealed by 00-06-082, filed 3/1/00, effective 3/1/00. Statutory Authority: RCW 70.114A.065 and 70.114A.110.

246-358-030 Department authority. [Statutory Authority: RCW 43.70.340. 96-01-084, § 246-358-030, filed 12/18/95, effective 1/1/96. Statutory Authority: RCW 43.70.340 and 43.70.040. 93-03-031 (Order 324), § 246-358-030, filed 1/12/93, effective 2/12/93.] Repealed by 00-06-082, filed 3/1/00, effective 3/1/00. Statutory Authority: RCW 70.114A.065 and 70.114A.110.

246-358-035 Supervision and responsibility. [Statutory Authority: RCW 70.54.110. 92-04-082 (Order 242B), § 246-358-035, filed 2/5/92, effective 3/7/92. Statutory Authority: RCW 43.20.050. 91-02-051 (Order 124B), recodified as § 246-358-035, filed 12/27/90, effective 1/31/91; 88-10-027 (Order 309), § 248-63-035, filed 5/2/88.] Repealed by 93-03-032 (Order 326B), filed 1/12/93, effective 2/12/93. Statutory Authority: RCW 70.54.110.

246-358-085 Worker-supplied housing. [Statutory Authority: RCW 70.54.110. 93-03-032 (Order 326B), § 246-358-085, filed 1/12/93, effective 2/12/93. Statutory Authority: RCW 43.20.050. 91-02-051 (Order 124B), recodified as § 246-358-085, filed 12/27/90, effective 1/31/91; 88-10-027 (Order 309), § 248-63-085, filed 5/2/88.] Repealed by 96-02-014, filed 12/21/95, effective 1/1/96. Statutory Authority: RCW 70.54.110.

246-358-105 Heating. [Statutory Authority: RCW 70.54.110. 93-03-032 (Order 326B), § 246-358-105, filed 1/12/93, effective 2/12/93; 92-04-082 (Order 242B), § 246-358-105, filed 2/5/92, effective 3/7/92. Statutory Authority: RCW 43.20.050. 91-02-051 (Order 124B), recodified as § 246-358-105, filed 12/27/90, effective 1/31/91; 88-10-027 (Order 309), § 248-63-105, filed 5/2/88.] Repealed by 96-02-014, filed 12/21/95, effective 1/1/96. Statutory Authority: RCW 70.54.110.

246-358-115 Lighting. [Statutory Authority: RCW 70.54.110. 93-03-032 (Order 326B), § 246-358-115, filed 1/12/93, effective 2/12/93; 92-04-082 (Order 242B), § 246-358-115, filed 2/5/92, effective 3/7/92. Statutory Authority: RCW 43.20.050. 91-02-051 (Order 124B), recodified as § 246-358-115, filed 12/27/90, effective 1/31/91; 88-10-027 (Order 309), § 248-63-115, filed 5/2/88.] Repealed by 96-02-014, filed 12/21/95, effective 1/1/96. Statutory Authority: RCW 70.54.110.

246-358-140 Use of tents. [Statutory Authority: RCW 70.54.110. 96-02-014, § 246-358-140, filed 12/21/95, effective 1/1/96; 93-03-032 (Order 326B), § 246-358-140, filed 1/12/93, effective 2/12/93.] Repealed by 00-06-082, filed 3/1/00, effective 3/1/00. Statutory Authority: RCW 70.114A.065 and 70.114A.110.

246-358-600 Cherry harvest camps—Applicability. [Statutory Authority: RCW 70.54.110 and 43.20.050(3). 99-12-006, § 246-358-600, filed 5/19/99, effective 5/19/99.] Repealed by 00-06-082, filed 3/1/00, effective 3/1/00. Statutory Authority: RCW 70.114A.065 and 70.114A.110.

246-358-610 Cherry harvest camps—Licensing. [Statutory Authority: RCW 70.54.110 and 43.20.050(3). 99-12-006, § 246-358-610, filed 5/19/99, effective 5/19/99.] Repealed by 00-06-082, filed 3/1/00, effective 3/1/00. Statutory Authority: RCW 70.114A.065 and 70.114A.110.

246-358-620 Cherry harvest camps—Transitional compliance schedule. [Statutory Authority: RCW 70.54.110 and 43.20.050(3). 99-12-006, § 246-358-620, filed 5/19/99, effective 5/19/99.] Repealed by 00-06-082, filed 3/1/00, effective 3/1/00. Statutory Authority: RCW 70.114A.065 and 70.114A.110.

246-358-630 Cherry harvest camps—Location of camp area and camp management plan. [Statutory Authority: RCW 70.54.110 and 43.20.050(3). 99-12-006, § 246-358-630, filed 5/19/99, effective 5/19/99.] Repealed by 00-06-082, filed 3/1/00, effective 3/1/00. Statutory Authority: RCW 70.114A.065 and 70.114A.110.

246-358-640 Cherry harvest camps—Adequate lighting, electricity and alternative power. [Statutory Authority: RCW 70.54.110 and 43.20.050(3). 99-12-006, § 246-358-640, filed 5/19/99, effective 5/19/99.] Repealed by 00-06-082, filed 3/1/00, effective 3/1/00. Statutory Authority: RCW 70.114A.065 and 70.114A.110.

246-358-650 Cherry harvest camps—Bathing, toilet and handwashing areas. [Statutory Authority: RCW 70.54.110 and 43.20.050(3). 99-12-006, § 246-358-650, filed 5/19/99, effective 5/19/99.] Repealed by 00-06-082, filed 3/1/00, effective 3/1/00. Statutory Authority: RCW 70.114A.065 and 70.114A.110.

246-358-660 Cherry harvest camps—Personal storage. [Statutory Authority: RCW 70.54.110 and 43.20.050(3). 99-12-006, § 246-358-660, filed 5/19/99, effective 5/19/99.] Repealed by 00-06-082, filed 3/1/00, effective 3/1/00. Statutory Authority: RCW 70.114A.065 and 70.114A.110.

246-358-670 Cherry harvest camps—Cold food storage areas. [Statutory Authority: RCW 70.54.110 and 43.20.050(3). 99-12-006, § 246-358-670, filed 5/19/99, effective 5/19/99.] Repealed by 00-06-082, filed 3/1/00, effective 3/1/00. Statutory Authority: RCW 70.114A.065 and 70.114A.110.

246-358-680 Cherry harvest camps—Food storage and preparation areas. [Statutory Authority: RCW 70.54.110 and 43.20.050(3). 99-12-006, § 246-358-680, filed 5/19/99, effective 5/19/99.] Repealed by 00-06-082, filed 3/1/00, effective 3/1/00. Statutory Authority: RCW 70.114A.065 and 70.114A.110.

WAC 246-358-001 Purpose and applicability. (1) Purpose. This chapter is adopted by the Washington state department of health to implement the provisions of chapter 70.114A RCW and establish minimum health and safety requirements for temporary worker housing.

(2) Applicability.

(a) This chapter applies only to operators of temporary worker housing. Operators using tents within the cherry harvest season must refer to WAC 296-307-16300, Part L-1, or chapter 246-361 WAC.

(b) Operators with ten or more occupants are required to be licensed under this chapter. Operators with nine or less employees are not required to be licensed, but must comply with these standards.

[Statutory Authority: RCW 70.114A.065 and 70.114A.110. 00-06-082, § 246-358-001, filed 3/1/00, effective 3/1/00. Statutory Authority: RCW 70.54.110. 96-02-014, § 246-358-001, filed 12/21/95, effective 1/1/96; 93-12-043 (Order 365B), § 246-358-001, filed 5/25/93, effective 6/25/93; 93-03-032 (Order 326B), § 246-358-001, filed 1/12/93, effective 2/12/93; 92-04-082 (Order 242B), § 246-358-001, filed 2/5/92, effective 3/7/92. Statutory Authority: RCW 43.20.050. 91-02-051 (Order 124B), recodified as § 246-358-001, filed 12/27/90, effective 1/31/91; 88-10-027 (Order 309), § 248-63-001, filed 5/2/88; 84-18-034 (Order 273), § 248-63-001, filed 8/30/84. Formerly WAC 248-61-001.]

WAC 246-358-010 Definitions. For the purposes of this chapter, the following words and phrases will have the following meanings unless the context clearly indicates otherwise:

(1) "Agricultural employee" means any person who renders personal services to, or under the direction of, an agricultural employer in connection with the employer's agricultural activity.

(2) "Agricultural employer" means any person engaged in agricultural activity, including the growing, producing, or harvesting of farm or nursery products, or engaged in the forestation or reforestation of lands, which includes, but is not limited to, the planting, transplanting, tubing, precommercial thinning, and thinning of trees and seedlings, the clearing, piling, and disposal of brush and slash, the harvest of Christmas trees, and other related activities.

(3) "Building" means any structure used or intended to be used for supporting or sheltering any use or occupancy that may include cooking, eating, sleeping, and sanitation facilities.

(4) "Common food-handling facility" means an area designated by the operator for occupants to store, prepare, cook, and eat their own food supplies.

(5) "Current certificate (first aid)" means a first-aid-training certificate that has not expired.

(6) "Department" means the Washington state department of health and/or the department of labor and industries.

(7) "Dining hall" means a cafeteria-type eating place with food furnished by and prepared under the direction of the operator for consumption, with or without charge, by occupants.

(8) "Drinking fountain" means a fixture equal to a nationally recognized standard or a designed-to-drain faucet which provides potable drinking water under pressure. "Drinking fountain" does not mean a bubble-type water dispenser.

(9) "Dwelling unit" means a shelter, building, or portion of a building, that may include cooking and eating facilities, which is:

(a) Provided and designated by the operator as either a sleeping area, living area, or both, for occupants; and

(b) Physically separated from other sleeping and common-use areas.

(10) "First-aid qualified" means that the person holds a current certificate of first-aid training from the American Red Cross or another course with equivalent content or hours.

(11) "Food-handling facility" means a designated, enclosed area for preparation of food.

(12) "Group A water system" means a public water system and includes community and noncommunity water systems.

(a) A community water system means any Group A water system providing service to fifteen or more service connections used by year-round residents for one hundred eighty or more days within a calendar year, regardless of the number of people, or regularly serving at least twenty-five year-round (i.e., more than one hundred eighty days per year) residents.

(b) A noncommunity water system means a Group A water system that is not a community water system. Noncommunity water systems are further defined as:

(i) Nontransient (NTNC) water system that provides service opportunity to twenty-five or more of the same nonresidential people for one hundred eighty or more days within a calendar year.

(ii) Transient (TNC) water system that serves:

(A) Twenty-five or more different people each day for sixty or more days within a calendar year;

(B) Twenty-five or more of the same people each day for sixty or more days, but less than one hundred eighty days within a calendar year; or

(C) One thousand or more people for two or more consecutive days within a calendar year.

(13) "Group B water system" means a public water system: Constructed to serve less than fifteen residential services regardless of the number of people; or constructed to serve an average nonresidential population of less than twenty-five per day for sixty or more days within a calendar year; or any number of people for less than sixty days within a calendar year.

(14) "Habitable room" means a room or space in a structure with a minimum seven-foot ceiling used for living, sleeping, eating, or cooking. Bathrooms, toilet compartments, closets, halls, storage or utility space, and similar areas are not considered habitable space.

(15) "Health officer" means the individual appointed as such for a local health department under chapter 70.05 RCW or appointed as the director of public health of a combined city-county health department under chapter 70.08 RCW.

(16) "Livestock" means horses, cows, pigs, sheep, goats, poultry, etc.

(17) "Livestock operation" means any place, establishment, or facility consisting of pens or other enclosures in which livestock is kept for purposes including, but not limited to, feeding, milking, slaughter, watering, weighing, sorting, receiving, and shipping. Livestock operations include, among other things, dairy farms, corrals, slaughterhouses, feedlots, and stockyards. Operations where livestock can roam on a pasture over a distance may be treated as outside the definition.

(18) "MSPA" means the Migrant and Seasonal Agricultural Worker Protection Act (96 Stat. 2583; 29 U.S.C. Sec. 1801 et seq.).

(19) "Occupant" means a temporary worker or a person who resides with a temporary worker at the housing site.

(20) "Operating license" means a document issued annually by the department or health officer authorizing the use of temporary worker housing.

(21) "Operator" means a person holding legal title to the land on which temporary worker housing is located. However, if the legal title and the right to possession are in different persons, "operator" means a person having the lawful control or supervision over the temporary worker housing.

(22) "Recreational park trailers" means a trailer-type unit that is primarily designed to provide temporary living quarters for recreational, camping, or seasonal use, that meets the following criteria:

(a) Built on a single chassis, mounted on wheels;

(b) Having a gross trailer area not exceeding 400 square feet (37.15 square meters) in the set-up mode; and

(c) Certified by the manufacturer as complying with ANSI A119.5.

(23) "Recreational vehicle" means a vehicular type unit primarily designed as temporary living quarters for recreational camping, travel, or seasonal use that either has its own motive of power or is mounted on, or towed by, another vehicle. Recreational vehicles include: Camping trailers, fifth-wheel trailers, motor homes, travel trailers, and truck campers, but does not include pickup trucks with camper shells, canopies, or other similar coverings.

(24) "Refuse" means solid wastes, rubbish, or garbage.

(25) "Temporary worker" means an agricultural employee employed intermittently and not residing year-round at the same site.

(26) "Temporary worker housing" or "housing" means a place, area, or piece of land where sleeping places or housing sites are provided by an agricultural employer for his or her agricultural employees or by another person, including a tem-

porary worker housing operator, who is providing such accommodations for employees for temporary, seasonal occupancy.

(27) "WISHA" means the Washington Industrial Safety and Health Act, chapter 49.17 RCW, administered by the Washington state department of labor and industries.

[Statutory Authority: RCW 70.114A.065 and 70.114A.110. 00-06-082, § 246-358-010, filed 3/1/00, effective 3/1/00. Statutory Authority: RCW 70.54.110. 96-02-014, § 246-358-010, filed 12/21/95, effective 1/1/96; 93-03-032 (Order 326B), § 246-358-010, filed 1/12/93, effective 2/12/93; 92-04-082 (Order 242B), § 246-358-010, filed 2/5/92, effective 3/7/92. Statutory Authority: RCW 43.20.050. 91-02-051 (Order 124B), recodified as § 246-358-010, filed 12/27/90, effective 1/31/91; 88-10-027 (Order 309), § 248-63-010, filed 5/2/88; 84-18-034 (Order 273), § 248-63-010, filed 8/30/84. Formerly WAC 248-60A-010 and 248-61-010.]

WAC 246-358-025 Operating license. The operator:

(1) Must request a license from the department of health or health officer when:

(a) Housing consists of:

(i) Five or more dwelling units; or

(ii) Any combination of dwelling units, or spaces that house ten or more occupants;

(b) Compliance with MSPA requires a license; or

(c) Construction of camp buildings requires a license under chapter 246-359 WAC, Temporary worker housing construction standard.

(2) Must apply for an operating license at least forty-five days prior to either the use of housing or the expiration of an existing operating license by submitting to the department of health or health officer:

(a) A completed application on a form provided by the department or health officer;

(b) Proof water system is current with all water tests required by chapter 246-290 or 246-291 WAC; and

(c) A fee as specified in WAC 246-358-990.

(3) Will receive an operating license for the maximum number of occupants as determined by WAC 246-358-029 when:

(a) The application requirements from subsection (2) of this section are met;

(b) The housing is in compliance with this chapter as demonstrated by:

(i) A licensing survey completed by the department of health; or

(ii) A self-survey completed by the operator and approved by the department of health; and

(c) The operator complies with the corrective action plan established by the department.

(4) May allow the use of housing without a renewed license when all of the following conditions exist:

(a) The operator applied for renewal of an operating license in accordance with subsection (2) of this section at least forty-five days before occupancy, as evidenced by the post mark;

(b) The department of health or health officer has not inspected the housing or issued an operating license;

(c) Other local, state, or federal laws, rules, or codes do not prohibit use of the housing; and

(d) The operator provides and maintains housing in compliance with this chapter.

(5) Must post the operating license in a place readily accessible to occupants of the housing.

(6) Must notify the department of health or health officer of a transfer of ownership.

(7) Must cooperate with the department or health officer during on-site inspections.

[Statutory Authority: RCW 70.114A.065 and 70.114A.110. 00-06-082, § 246-358-025, filed 3/1/00, effective 3/1/00. Statutory Authority: RCW 43.70.340. 96-01-084, § 246-358-025, filed 12/18/95, effective 1/1/96. Statutory Authority: RCW 43.70.340 and 43.70.040. 93-03-031 (Order 324), § 246-358-025, filed 1/12/93, effective 2/12/93. Statutory Authority: RCW 70.54.110. 92-04-082 (Order 242B), § 246-358-025, filed 2/5/92, effective 3/7/92. Statutory Authority: RCW 43.20.050. 91-02-051 (Order 124B), recodified as § 246-358-025, filed 12/27/90, effective 1/31/91. Statutory Authority: Chapter 34.05 RCW and RCW 43.20.050. 90-06-049 (Order 040), § 248-63-025, filed 3/2/90, effective 3/2/90. Statutory Authority: RCW 43.20.050. 88-10-027 (Order 309), § 248-63-025, filed 5/2/88.]

WAC 246-358-027 Requirements for self-survey program. If a licensed operator meets the requirements provided in this section, then the operator may participate in the self-survey program. This means an operator is allowed to conduct a self-survey for two years. On the third year the department of health will conduct an on-site verification survey to assure compliance with this chapter and determine if the temporary worker housing still meets the requirements of the self-survey program.

(1) To be in the self-survey program the operator must:

(a) Meet the requirements of WAC 246-358-025;

(b) Not have had any valid complaints;

(c) Have had two consecutive years without any deficiencies or have had very minor deficiencies (for example one or two screens torn, missing a few small trash cans, etc.); and

(d) Be recommended by the health surveyor.

(2) For a licensed operator to remain in the self-survey program the licensed operator must:

(a) Continue to comply with subsection (1) of this section;

(b) Continue to not have any deficiencies or very minor deficiencies; and

(c) Not have a change in ownership.

(3) When licensed temporary worker housing changes ownership, the new licensed operator must comply with the requirements of subsection (1) of this section before being eligible to be on the self-survey program.

[Statutory Authority: RCW 70.114A.065 and 70.114A.110. 00-06-082, § 246-358-027, filed 3/1/00, effective 3/1/00.]

WAC 246-358-029 Maximum housing occupancy. (1) The maximum occupancy for operator-supplied housing will be based on:

(a) The square footage of the housing facility; and

(b) The number of bathing, food handling, handwashing, laundry, and toilet facilities.

(2) The maximum occupancy for worker-supplied housing will be based on:

(a) The number of spaces designated for worker-supplied housing by the operator; and

(b) The number of bathing, food handling, handwashing, laundry, and toilet facilities in excess of those facilities required for operator-supplied housing.

Note: Worker supplied housing includes recreational park trailers, recreational vehicles, OSHA compliant tents or other structures that meet the requirements of this chapter.

[Statutory Authority: RCW 70.114A.065 and 70.114A.110. 00-06-082, § 246-358-029, filed 3/1/00, effective 3/1/00.]

WAC 246-358-040 Variance and procedure. Conditions may exist in operations that a state standard will not have practical use. The director of the department of labor and industries may issue a variance from the requirements of the standard when another means of providing equal protection is provided. The substitute means must provide equal protection in accordance with the requirements of chapter 49.17 RCW and chapter 296-350 WAC, variances.

Applications for variances will be reviewed and may be investigated by the department of labor and industries and the department of health. Variances granted will be limited to the specific case or cases covered in the application and may be revoked for cause. The variance shall remain prominently posted on the premises while in effect.

Variance application forms may be obtained from the Department of Labor and Industries, P.O. Box 44625, Olympia, Washington 98504-4625 or the Department of Health, P.O. Box 47852, Olympia, Washington 98504-7852, upon request. Requests for variances from safety and health standards shall be made in writing to the director or the assistant director, Department of Labor and Industries, P.O. Box 44625, Olympia, Washington 98504-4625. (Reference RCW 49.17.080 and 49.17.090.)

[Statutory Authority: RCW 70.114A.065 and 70.114A.110. 00-06-082, § 246-358-040, filed 3/1/00, effective 3/1/00.]

WAC 246-358-045 Temporary worker housing sites. The operator must:

(1) Locate and operate a site to prevent a health or safety hazard that is:

(a) Adequately drained and any drainage from and through the housing must not endanger any domestic or public water supply;

(b) Free from periodic flooding and depressions in which water may become a nuisance;

(c) At least two hundred feet from a swamp, pool, sink hole, or other surface collection of water unless there is a mosquito prevention program for those areas;

(d) Large enough to prevent overcrowding of necessary structures. The principal housing area for sleeping and for food preparation and eating must be at least five hundred feet from where livestock are kept; and

(e) The grounds and open areas surrounding the shelters must be in a clean and sanitary condition.

(2) Must develop and implement a temporary worker housing management plan and rules for operators with ten or more occupants, to assure that the housing is operated in a safe and secure manner and is kept within the approved capacity. Additionally, the licensed operator must:

(a) Inform occupants of the rules, in a language the occupant understands by providing individual copies of the rules to each occupant or posting the rules in the housing area;

(b) Restrict the number of occupants in the temporary worker housing to the capacity as determined by the department.

(3) When closing housing permanently or for the season, complete the following:

(a) Dispose of all refuse to prevent nuisance;

(b) Fill all abandoned toilet pits with earth; and

(c) Leave the grounds and buildings in a clean and sanitary condition.

[Statutory Authority: RCW 70.114A.065 and 70.114A.110. 00-06-082, § 246-358-045, filed 3/1/00, effective 3/1/00. Statutory Authority: RCW 70.54.110. 96-02-014, § 246-358-045, filed 12/21/95, effective 1/1/96; 93-03-032 (Order 326B), § 246-358-045, filed 1/12/93, effective 2/12/93; 92-04-082 (Order 242B), § 246-358-045, filed 2/5/92, effective 3/7/92. Statutory Authority: RCW 43.20.050. 91-02-051 (Order 124B), recodified as § 246-358-045, filed 12/27/90, effective 1/31/91; 88-10-027 (Order 309), § 248-63-045, filed 5/2/88.]

WAC 246-358-055 Water supply. The operator must:

(1) Provide a water system that is:

(a) Approved as a Group A public water system in compliance with chapter 246-290 WAC if the water system supplies fifteen or more connections or twenty-five or more people at least sixty days per year or provide proof the camp receives water from an approved Group A public water system or provide proof the temporary worker housing receives water from an approved Group A public water system; or

(b) Approved as a Group B water system in compliance with chapter 246-291 WAC if the water system supplies less than fifteen connections and does not supply twenty-five or more people at least sixty days per year.

Note: A "same farm exemption" applies to a public water system with four or fewer connections all of which serve residences on the same farm. "Same farm" means a parcel of land or series of parcels that are connected by covenants and devoted to the production of livestock or agricultural commodities for commercial purposes and does not qualify as a Group A water system.

	Avg. daily population of less than 25 people	Avg. daily population of 25 or more people
At least 60 days or more	Group B	Group A TNC
59 days or less	Group B	Group B

Note: If a system has fifteen or more connections, regardless of the population, it is a Group A water system.

(2) Provide an adequate and convenient hot and cold water supply for drinking, cooking, bathing, and laundry purposes.

Note: An "adequate water supply" means the storage capacity of the potable water system must meet the requirements of ASHRAE 1999 Applications Handbook, chapter 48, Water Systems.

(3) Ensure that the distribution lines are able to maintain the working pressure of the water piping system at not less than fifteen pounds per square inch after allowing for friction and other pressure losses.

(4) When water is not piped to each dwelling unit, provide cold, potable, running water under pressure within one hundred feet of each dwelling unit.

(5) When water sources are not available in each individual dwelling unit, provide one or more drinking fountains for each one hundred occupants or fraction thereof. Prohibit the use of common drinking cups or containers from which water is dipped or poured.

(6) When water is unsafe for drinking purposes and accessible to occupants, post a sign by the source reading "DO NOT DRINK. DO NOT USE FOR WASHING. DO NOT USE FOR PREPARING FOOD." printed in English and in the native language of the persons occupying the housing or marked with easily-understood pictures or symbols.

[Statutory Authority: RCW 70.114A.065 and 70.114A.110. 00-06-082, § 246-358-055, filed 3/1/00, effective 3/1/00. Statutory Authority: RCW 70.54.110. 96-02-014, § 246-358-055, filed 12/21/95, effective 1/1/96; 93-03-032 (Order 326B), § 246-358-055, filed 1/12/93, effective 2/12/93; 92-04-082 (Order 242B), § 246-358-055, filed 2/5/92, effective 3/7/92. Statutory Authority: RCW 43.20.050. 91-02-051 (Order 124B), recodified as § 246-358-055, filed 12/27/90, effective 1/31/91; 88-10-027 (Order 309), § 248-63-055, filed 5/2/88.]

WAC 246-358-065 Sewage disposal. The operator must:

(1) Provide sewage disposal systems in accordance with local health jurisdictions.

(2) Connect all drain, waste, and vent systems from buildings to:

(a) Public sewers, if available; or

(b) Approved on-site sewage disposal systems that are designed, constructed, and maintained as required in chapters 246-272 and 173-240 WAC, and local ordinances.

[Statutory Authority: RCW 70.114A.065 and 70.114A.110. 00-06-082, § 246-358-065, filed 3/1/00, effective 3/1/00. Statutory Authority: RCW 70.54.110. 96-02-014, § 246-358-065, filed 12/21/95, effective 1/1/96; 93-03-032 (Order 326B), § 246-358-065, filed 1/12/93, effective 2/12/93. Statutory Authority: RCW 43.20.050. 91-02-051 (Order 124B), recodified as § 246-358-065, filed 12/27/90, effective 1/31/91; 88-10-027 (Order 309), § 248-63-065, filed 5/2/88.]

WAC 246-358-070 Electricity and lighting. The operator must ensure that:

(1) Electricity is supplied to all dwelling units, kitchen facilities, shower/bathroom facilities, common areas, and laundry facilities.

(2) All electrical wiring, fixtures and electrical equipment must comply with the electrical standards of the department of labor and industries regulations, chapter 19.28 RCW, and local ordinances, and be maintained in a safe condition.

(3) Each habitable room must have at least one ceiling-type light fixture and at least one separate floor-type or wall-type convenience outlet.

(4) Laundry, shower/bathroom facilities, toilet rooms and rooms where people congregate have at least one ceiling-type or wall-type fixture.

(5) General lighting and task lighting is adequate to carry on normal daily activities.

(6) Adequate lighting is provided for safe passage for occupants to handwashing sinks and toilets.

Note: Lighting requirements may be met by natural or artificial means.

[Statutory Authority: RCW 70.114A.065 and 70.114A.110. 00-06-082, § 246-358-070, filed 3/1/00, effective 3/1/00.]

WAC 246-358-075 Building requirements and maintenance. An operator must:

(1) Construct buildings to provide protection against the elements and comply with:

(a) The State Building Code, chapter 19.27 RCW or the Temporary worker housing construction standard, chapter 246-359 WAC;

(b) State and local ordinances, codes, and regulations when applicable; and

(c) This chapter. Any shelter meeting these requirements is acceptable.

(2) Identify each dwelling unit and space used for shelter by posting a number at each site.

(3) Maintain buildings in good repair and sanitary condition.

(4) Provide exits that are unobstructed and remain free of any material or matter where its presence would obstruct or render the exit hazardous.

(5) Provide a ceiling height of at least seven feet for each habitable room. If a building has a sloped ceiling, no portion of the room measuring less than seven feet from the finished floor to the finished ceiling will be included in any computation of the minimum floor space.

(6) Provide at least seventy square feet of floor space for the first occupant and at least fifty square feet of floor space for each additional occupant in each dwelling unit.

(7) Provide each room used for sleeping purposes with at least fifty square feet of floor space for each occupant.

(8) Provide floors in accordance with the State Building Code, chapter 19.27 RCW, or the Temporary worker housing construction standard, chapter 246-359 WAC, that are tightly constructed and in good repair.

(9) Ensure wooden floors are at least one foot above ground-level, or meet the requirements in the State Building Code, chapter 19.27 RCW or temporary worker housing construction standard, chapter 246-359 WAC.

(10) Provide habitable rooms that have:

(a) Windows covering a total area equal to at least one-tenth of the total floor area and at least one-half of each window can be opened to the outside for ventilation; or

(b) Mechanical ventilation in accordance with applicable ASHRAE standards.

(11) Provide sixteen-mesh screening on all exterior openings and screen doors with self-closing devices.

(12) Install all heating, cooking, and water heating equipment according to state and local ordinances, codes, and regulations and maintain in a safe condition.

(13) Provide adequate heating equipment if habitable rooms, including bathrooms, are used during cold weather.

(14) Ensure that all recreational vehicles and park trailers meet the requirements of chapter 296-150P or 296-150R WAC.

[Statutory Authority: RCW 70.114A.065 and 70.114A.110. 00-06-082, § 246-358-075, filed 3/1/00, effective 3/1/00. Statutory Authority: RCW 70.54.110. 96-02-014, § 246-358-075, filed 12/21/95, effective 1/1/96; 93-03-032 (Order 326B), § 246-358-075, filed 1/12/93, effective 2/12/93; 92-04-082 (Order 242B), § 246-358-075, filed 2/5/92, effective 3/7/92. Statutory Authority: RCW 43.20.050. 91-02-051 (Order 124B), recodified as § 246-358-075, filed 12/27/90, effective 1/31/91; 88-10-027 (Order 309), § 248-63-075, filed 5/2/88.]

WAC 246-358-090 Laundry facilities. An operator must:

(1) Provide one laundry tray or tub or one mechanical washing machine for every thirty persons.

(2) Provide facilities for drying clothes.

(3) Provide sloped, coved floors of nonslip impervious materials with floor drains.

(4) Maintain laundry facilities in a clean and sanitary condition.

[Statutory Authority: RCW 70.114A.065 and 70.114A.110. 00-06-082, § 246-358-090, filed 3/1/00, effective 3/1/00. Statutory Authority: RCW 70.54.110. 96-02-014, § 246-358-090, filed 12/21/95, effective 1/1/96.]

WAC 246-358-095 Handwashing and bathing facilities. An operator must:

(1) Provide one handwash sink for each family dwelling unit or for every six persons in centralized facilities. Handwash sinks must be adjacent to toilets.

(2) Provide one showerhead for each family dwelling unit or for every ten persons in centralized facilities.

(3) Provide one "service sink" in each building used for centralized laundry, hand washing, or bathing.

(4) Provide sloped, coved floors of nonslip impervious materials with floor drains.

(5) Ensure shower room walls are smooth and nonabsorbent to the height of four feet. If used, partitions must be smooth and nonabsorbent to the height of four feet.

(6) Provide all showers, baths, or shower rooms with floor drains to remove wastewater.

(7) Provide cleanable, nonabsorbent waste containers.

(8) Maintain centralized bathing and handwashing facilities in a clean and sanitary condition, cleaned at least daily.

(9) Request occupants of family dwelling units to maintain bathing and handwashing facilities in a clean and sanitary condition.

(10) Ensure shower facilities provide privacy from the opposite sex and the public.

(11) Make showers and bathing facilities available when needed.

[Statutory Authority: RCW 70.114A.065 and 70.114A.110. 00-06-082, § 246-358-095, filed 3/1/00, effective 3/1/00. Statutory Authority: RCW 70.54.110. 96-02-014, § 246-358-095, filed 12/21/95, effective 1/1/96; 93-03-032 (Order 326B), § 246-358-095, filed 1/12/93, effective 2/12/93; 92-04-082 (Order 242B), § 246-358-095, filed 2/5/92, effective 3/7/92. Statutory Authority: RCW 43.20.050. 91-02-051 (Order 124B), recodified as § 246-358-095, filed 12/27/90, effective 1/31/91; 88-10-027 (Order 309), § 248-63-095, filed 5/2/88.]

WAC 246-358-100 Toilet facilities. (1) General toilet requirements. Operators must provide water flush toilets unless chemical toilets or pit privies are specifically approved by the department of health or health officer according to requirements in chapter 246-272 WAC and ensure the following:

(a) Flush toilets, chemical toilets, and urinals must not be located in any sleeping room, dining room, or cooking or food handling facility.

(b) When chemical toilets are approved, they must be:

(i) Located at least fifty feet from any dwelling unit or food handling facility;

(ii) Maintained by a licensed waste disposal company; and

(iii) Comply with local ordinances.

(c) When urinals are provided:

(i) There must be one urinal or two linear feet of urinal trough for each twenty-five men;

(ii) The floors and walls surrounding a urinal and extending out at least fifteen inches on all sides, must be constructed of materials which will not be adversely affected by moisture;

(iii) The urinal must have an adequate water flush where water under pressure is available; and

(iv) Urinal troughs are prohibited in pit privies.

(d) When pit privies are approved they must be:

(i) At least one hundred feet away from any sleeping room, dining room, cooking or food handling facilities; and

(ii) Constructed to exclude insects and rodents from the pit.

(2) Centralized toilet facilities. The operator must meet the following requirements when centralized toilet facilities are provided:

(a) Provide toilet rooms with:

(i) One toilet for every fifteen persons;

(ii) One handwashing sink for every six persons;

(iii) Either a window of at least six square feet opening directly to the outside, or be satisfactorily ventilated; and

(iv) All outside openings screened with sixteen-mesh material.

(b) Locate toilet rooms so that:

(i) Toilets are within two hundred feet of the door of each sleeping room; and

(ii) No person has to pass through a sleeping room to reach a toilet room.

(c) Maintain toilets in a clean and sanitary condition, cleaned at least daily.

(d) Provide each toilet compartment with an adequate supply of toilet paper.

(e) When shared facilities will be used for both men and women:

(i) Provide separate toilet rooms for each sex with a minimum of one toilet room for each sex and meet the required ratio as defined in (a) of this subsection;

(ii) Identify each room for "men" and "women" with signs printed in English and in the native language of the persons occupying the camp, or identified with easily understood pictures or symbols; and

(iii) Separate facilities by solid walls or partitions extending from the floor to the roof or ceiling when facilities for each sex are located in the same building.

(3) Individual family/unit dwelling toilet requirements. If providing flush toilets in individual cabins, apartments, or houses, the operator must:

(a) Provide one toilet for each individual family dwelling unit or fifteen persons.

(b) Provide one handwashing sink for each six persons. The sink must be located in the toilet room or immediately adjacent.

(c) Provide a window of at least six square feet opening directly to the outside, or be satisfactorily ventilated.

(d) Ensure all outside openings are screened with sixteen-mesh material.

(e) Ensure toilet facilities are cleaned prior to occupancy and request occupants to maintain the facilities in a clean and sanitary condition.

[Statutory Authority: RCW 70.114A.065 and 70.114A.110. 00-06-082, § 246-358-100, filed 3/1/00, effective 3/1/00. Statutory Authority: RCW 70.54.110. 96-02-014, § 246-358-100, filed 12/21/95, effective 1/1/96.]

WAC 246-358-125 Cooking and food-handling facilities. The operator must provide enclosed or screened cooking and food-handling facilities for all occupants. The operator must provide adequate tables and seating for occupants.

(1) If cooking facilities are located in dwelling units, the operator must provide:

(a) An operable cook stove or hot plate with at least one cooking surface for every two occupants;

(b) A sink with hot and cold running potable water under pressure;

(c) At least two (2) cubic feet of dry food storage space per occupant;

(d) Nonabsorbent, easily cleanable food preparation counters situated off the floor;

(e) Mechanical refrigeration conveniently located and able to maintain a temperature of forty-five degrees Fahrenheit or below, with at least two (2) cubic feet of storage space per occupant;

(f) Fire-resistant, nonabsorbent, nonasbestos, and easily cleanable wall coverings adjacent to cooking areas;

(g) Nonabsorbent, easily cleanable floors; and

(h) Adequate ventilation for cooking facilities.

(2) In common food-handling facilities, the operator must provide:

(a) A room or building, adequate in size, separate from any sleeping quarters;

(b) No direct openings to living or sleeping areas from the common food-handling facility;

(c) An operable cook stove or hot plate with at least one cooking surface for every four occupants, or four cooking surfaces for every two families;

(d) Sinks with hot and cold running potable water under pressure;

(e) At least two (2) cubic feet of dry food storage space per occupant;

(f) Nonabsorbent, easily cleanable food preparation counters situated off the floor;

(g) Mechanical refrigeration conveniently located and able to maintain a temperature of forty-five degrees Fahrenheit or below, with at least two (2) cubic feet of storage space per occupant;

(h) Fire-resistant, nonabsorbent, nonasbestos, and easily cleanable wall coverings adjacent to cooking areas;

(i) Nonabsorbent, easily cleanable floors; and

(j) Adequate ventilation for cooking facilities.

(3) The operator must ensure that centralized dining hall facilities comply with chapter 246-215 WAC, Food service.

[Statutory Authority: RCW 70.114A.065 and 70.114A.110. 00-06-082, § 246-358-125, filed 3/1/00, effective 3/1/00. Statutory Authority: RCW 70.54.110. 96-02-014, § 246-358-125, filed 12/21/95, effective 1/1/96; 93-03-032 (Order 326B), § 246-358-125, filed 1/12/93, effective 2/12/93; 92-04-082 (Order 242B), § 246-358-125, filed 2/5/92, effective 3/7/92. Statutory Authority: RCW 43.20.050. 91-02-051 (Order 124B), recodified as § 246-358-125, filed 12/27/90, effective 1/31/91; 88-10-027 (Order 309), § 248-63-125, filed 5/2/88.]

WAC 246-358-135 Cots, beds, bedding and personal storage. The operator must:

(1) Provide beds, cots, or bunks furnished with clean mattresses in good condition for the maximum occupancy approved by the department of health or health officer for operator-supplied housing.

(2) Maintain bedding, if provided by the operator, in a clean and sanitary condition.

(3) Provide sufficient clearance between each bed or bunk and the floor or provide a commercially available cot, bed or bunk.

(4) Allow space to separate beds laterally and end to end by at least thirty-six inches when single beds are used.

(5) Meet the following requirements when bunk beds are used:

(a) Allow space to separate beds laterally and end to end by at least forty-eight inches;

(b) Maintain a minimum space of twenty-seven inches between the upper and lower bunks; and

(c) Prohibit triple bunks.

(6) Provide storage facilities for clothing and personal articles in each room used for sleeping.

[Statutory Authority: RCW 70.114A.065 and 70.114A.110. 00-06-082, § 246-358-135, filed 3/1/00, effective 3/1/00. Statutory Authority: RCW 70.54.110. 96-02-014, § 246-358-135, filed 12/21/95, effective 1/1/96; 93-03-032 (Order 326B), § 246-358-135, filed 1/12/93, effective 2/12/93; 92-04-082 (Order 242B), § 246-358-135, filed 2/5/92, effective 3/7/92. Statutory Authority: RCW 43.20.050. 91-02-051 (Order 124B), recodified as § 246-358-135, filed 12/27/90, effective 1/31/91; 88-10-027 (Order 309), § 248-63-135, filed 5/2/88.]

WAC 246-358-145 First aid and safety. The operator must:

(1) Comply with chapters 15.58 and 17.21 RCW, chapter 16-228 WAC, chapter 296-307 WAC, Parts I and J, and pesticide label instructions when using pesticides in and around the housing.

(2) Prohibit, in the housing area, the use, storage, and mixing of flammable, volatile, or toxic substances other than those intended for household use.

(3) Provide readily accessible first-aid equipment.

(4) Ensure that a first aid qualified person is readily accessible to administer first aid at all times.

(5) Store or remove unused refrigerator units to prevent access by children.

[Statutory Authority: RCW 70.114A.065 and 70.114A.110. 00-06-082, § 246-358-145, filed 3/1/00, effective 3/1/00. Statutory Authority: RCW 70.54.110. 96-02-014, § 246-358-145, filed 12/21/95, effective 1/1/96; 93-03-032 (Order 326B), § 246-358-145, filed 1/12/93, effective 2/12/93; 92-04-082 (Order 242B), § 246-358-145, filed 2/5/92, effective 3/7/92. Statutory Authority: RCW 43.20.050. 91-02-051 (Order 124B), recodified as § 246-358-145, filed 12/27/90, effective 1/31/91; 88-10-027 (Order 309), § 248-63-145, filed 5/2/88.]

WAC 246-358-155 Refuse disposal. The operator must:

(1) Comply with local sanitation codes for removing and disposing of refuse from housing areas.

(2) Protect against rodent harborage, insect breeding, and other health hazards while storing, collecting, transporting, and disposing of refuse.

(3) Store refuse in fly-tight, rodent-tight, impervious, and cleanable or single-use containers.

(4) Keep refuse containers clean.

(5) Provide a container on a wooden, metal, or concrete stand within one hundred feet of each dwelling unit.

(6) Empty refuse containers at least twice each week, and when full.

[Statutory Authority: RCW 70.114A.065 and 70.114A.110. 00-06-082, § 246-358-155, filed 3/1/00, effective 3/1/00. Statutory Authority: RCW 70.54.110. 96-02-014, § 246-358-155, filed 12/21/95, effective 1/1/96; 93-03-032 (Order 326B), § 246-358-155, filed 1/12/93, effective 2/12/93; 92-04-082 (Order 242B), § 246-358-155, filed 2/5/92, effective 3/7/92. Statutory Authority: RCW 43.20.050. 91-02-051 (Order 124B), recodified as § 246-358-155, filed 12/27/90, effective 1/31/91; 88-10-027 (Order 309), § 248-63-155, filed 5/2/88.]

WAC 246-358-165 Insect and rodent control. The operator must take effective measures to prevent and control insect and rodent infestation.

[Statutory Authority: RCW 70.114A.065 and 70.114A.110. 00-06-082, § 246-358-165, filed 3/1/00, effective 3/1/00. Statutory Authority: RCW 70.54.110. 93-03-032 (Order 326B), § 246-358-165, filed 1/12/93, effective 2/12/93. Statutory Authority: RCW 43.20.050. 91-02-051 (Order 124B), recodified as § 246-358-165, filed 12/27/90, effective 1/31/91; 88-10-027 (Order 309), § 248-63-165, filed 5/2/88.]

WAC 246-358-175 Disease prevention and control. The operator must:

(1) Report immediately to the local health officer the name and address of any occupant known to have or suspected of having a communicable disease.

(2) Report immediately to the local health officer:

(a) Suspected food poisoning;

(b) Unusual prevalence of fever, diarrhea, sore throat, vomiting, or jaundice; or

(c) Productive cough, or when weight loss is a prominent symptom among occupants.

(3) Prohibit any individual with a communicable disease from preparing, cooking, serving, or handling food, foodstuffs, or materials in dining halls.

[Statutory Authority: RCW 70.114A.065 and 70.114A.110. 00-06-082, § 246-358-175, filed 3/1/00, effective 3/1/00. Statutory Authority: RCW 70.54.110. 96-02-014, § 246-358-175, filed 12/21/95, effective 1/1/96; 93-03-032 (Order 326B), § 246-358-175, filed 1/12/93, effective 2/12/93; 92-04-082 (Order 242B), § 246-358-175, filed 2/5/92, effective 3/7/92. Statutory Authority: RCW 43.20.050. 91-02-051 (Order 124B), recodified as § 246-358-175, filed 12/27/90, effective 1/31/91; 88-10-027 (Order 309), § 248-63-175, filed 5/2/88.]

WAC 246-358-990 Fees. (1) License fees. An operator must submit to the department a license fee of twenty-five dollars and an on-site survey fee as specified in Table 990.

Note: A separate on-site survey fee will be charged for each housing site owned or managed by an operator which is more than thirty minutes or twenty-five miles apart.

(2) Self-survey program fee. An operator who meets the self-survey program requirements of WAC 246-358-027 must pay:

(a) An annual licensing fee, according to Table 990; and

(b) An on-site survey fee every third year.

(3) Follow-up surveys. An operator will be charged an additional on-site survey fee for any follow-up surveys, when the department determines additional on-site surveys are necessary to confirm compliance with this chapter.

(4) Complaint investigation fees. An operator will be charged for each on-site survey conducted by the department when a complaint investigation results in the complaint being found valid. This fee will be charged according to Table 990 for on-site survey.

(5) Water test fees. An operator who cannot provide written proof that the water system serving the camp is in compliance with WAC 246-358-055 at the time of survey will be:

(a) Directly billed for the cost of each required water sample collected by department staff;

(b) Cited for noncompliance with WAC 246-358-055; and

(c) If substantiated, cited for operating an unlicensed camp.

(6) Late fees. An operator who does not submit the fee and application as required by WAC 246-358-025, Licensing, may be charged a late fee of one-half the cost of the license fee. If the license fee and the application are not received by the time of the preoccupancy survey, an additional late fee of one-half the cost of the license fee may be charged. If the fee and application are not received within ten days of the preoccupancy survey the TWH may be considered unlicensed and subject to fines according to WAC 246-358-900.

(7) Refunds. The license and on-site survey fee may be refunded when the operator submits:

(a) A written request to the department; and

(b) Provides documentation that the housing was not occupied during the license period.

Table 990

Number of Units or Occupants Whichever is Greater	On-Site Survey Fee (Includes: Initial, Annual Licensing, Follow-Up, and Complaint Investigation Surveys)	License Fee	Total Fee Survey + License
1 to 4 units or 9 occupants or less*	$45.00	$25.00	$70.00
5 to 10 units or 10 to 50 occupants	$70.00	$25.00	$95.00
11 to 20 units or 51 to 100 occupants	$120.00	$25.00	$145.00
21 to 50 units or 101 to 150 occupants	$150.00	$25.00	$175.00
over 50 units or over 150 occupants	$175.00	$25.00	$200.00

Note: The on-site survey fee includes two surveys per year (one preoccupancy and one occupancy). Any additional visits (follow-up and/or complaint investigation) will be considered an additional service and will be billed separately at the rates established in Table 990.

*Operators with four or less units or nine or less occupants are not required to be licensed except when licensure is required by WAC 246-358-025.

[Statutory Authority: RCW 43.70.340. 99-24-095, § 246-358-990, filed 11/30/99, effective 12/31/99. Statutory Authority: RCW 43.70.340 and 43.70.040. 93-03-031 (Order 324), § 246-358-990, filed 1/12/93, effective 2/12/93. Statutory Authority: RCW 43.70.040. 91-02-049 (Order 121), recodified as § 246-358-990, filed 12/27/90, effective 1/31/91. Statutory

Authority: RCW 43.20A.055. 87-24-074 (Order 2564), § 440-44-100, filed 12/2/87; 86-05-029 (Order 2342), § 440-44-100, filed 2/19/86.]

Chapter 246-359 WAC

TEMPORARY WORKER HOUSING CONSTRUCTION STANDARD

WAC

246-359-001 Purpose and scope.
246-359-005 Applicability.
246-359-010 Definitions.
246-359-020 Powers and duties of the department of health.
246-359-030 Cooperation with the department of health—Right of entry.
246-359-040 Appeals.
246-359-050 Minor variances to the temporary worker housing construction standard.
246-359-060 Architect or engineer of record and plan submittal responsibilities.
246-359-070 Application and construction documents required for plan review.
246-359-080 Plan review approval and expiration of plan approval.
246-359-090 Issuing and maintaining a construction permit.
246-359-100 Expiration and extension of construction permits.
246-359-110 Construction without a permit.
246-359-120 Required inspections.
246-359-130 Stop work orders.
246-359-140 Certificate of completion.
246-359-150 Site requirements.
246-359-160 Temporary worker housing minimum floor area and ceiling height.
246-359-170 Wood framed construction and concrete masonry unit (CMU) general limitations.
246-359-180 Concrete footings and foundations for wood framed construction.
246-359-200 Wood framed construction.
246-359-210 Treated wood foundations for wood framed construction.
246-359-220 Floor framing for wood framed construction.
246-359-230 Wall framing for wood framed construction.
246-359-240 Exterior wall covering for wood framed construction.
246-359-250 Roof framing for wood framed construction and concrete masonry units (CMU).
246-359-300 Ceiling framing for wood framed construction and concrete masonry units (CMU).
246-359-310 Roof sheathing for wood framed construction and concrete masonry units.
246-359-320 Roof covering materials for wood framed construction and concrete masonry units (CMU).
246-359-330 Roof framing ventilation for wood framed construction and concrete masonry units (CMU).
246-359-340 Nailing schedule wood framed construction and concrete masonry units.
246-359-350 Roof connections for concrete masonry units (CMU).
246-359-400 Concrete masonry unit (CMU).
246-359-405 Concrete masonry units (CMU) materials.
246-359-410 Foundations and footings for concrete masonry units (CMU) walls.
246-359-420 Placing of concrete masonry units (CMU).
246-359-430 Floors for concrete masonry units (CMU).
246-359-440 Walls of concrete masonry units (CMU).
246-359-500 Window construction requirements.
246-359-510 Door requirements.
246-359-520 Door landings, stairways and guardrails.
246-359-530 Interior finishes.
246-359-540 Lighting and electrical.
246-359-550 Smoke detectors.
246-359-560 Plumbing.
246-359-565 Cooking facilities.
246-359-570 Mechanical installations.
246-359-575 Energy and ventilation and indoor air quality requirement exemptions.
246-359-580 Heating and insulation.
246-359-590 Liquid petroleum gas (LP-gas) storage tanks.
246-359-600 Alternate construction.
246-359-700 Approval of factory assembled structures (FAS).
246-359-710 Installation of factory assembled structures (FAS)—Except for manufactured homes.
246-359-720 Installation requirements for manufactured homes.
246-359-730 Manufactured home installers.
246-359-740 Drain connector to factory assembled structures (FAS).
246-359-750 Water connector to factory assembled structures (FAS).
246-359-760 Gas connections to factory assembled structures (FAS).
246-359-800 WISHA requirements affecting building temporary worker housing.
246-359-990 Fees.

WAC 246-359-001 Purpose and scope. (1) **Purpose.** The purpose of this chapter is to provide minimum requirements to safeguard the health and general welfare of occupants of temporary worker housing by regulating and controlling the design, construction, materials, location and maintenance of all buildings and structures within the authority of chapter 246-358 WAC (the temporary worker housing rules) and this chapter.

(2) **Scope.** This chapter implements the requirements established by RCW 70.114A.081 and 43.70.337 to provide minimum construction requirements for new, relocated, existing or altered buildings and structures or portions thereof intended for use as temporary worker housing. Such buildings and structures must be licensed by the Washington state department of health under chapter 246-358 WAC and designated as "temporary worker housing occupancies." Buildings and structures which are not licensed, inspected and approved by the department must meet the provisions of the state building code under the local authority having jurisdiction and local ordinances.

[Statutory Authority: RCW 70.114A.081. 99-03-065, § 246-359-001, filed 1/18/99, effective 2/18/99.]

WAC 246-359-005 Applicability. (1) This chapter applies only to temporary worker housing as:

(a) Defined in chapter 70.114A RCW; and

(b) Licensed under chapter 246-358 WAC (temporary worker housing rules) according to RCW 43.70.340 (Farmworker housing inspection fund—fee on labor camp operating license).

(2) Existing structures built as nonresidential buildings, according to the state building code, may be licensed as temporary worker housing by complying with the specific requirements of WAC 246-359-600, alternate construction, and approved under the authority of this chapter.

(3) Alterations to residential housing constructed according to the state building code and approved by the authority having jurisdiction must apply to:

(a) The authority having jurisdiction for issuing building permits; or

(b) The department in compliance with this chapter.

(4) Temporary worker housing meeting the requirements of subsection (1) of this section must:

(a) Be located on a rural worksite; and

(b) Comply with:

(i) WISHA labor camp provisions;

(ii) Chapter 246-358 WAC (temporary worker housing rules); and

(iii) The electrical code, chapter 296-46 WAC.

(5) Temporary worker housing built in compliance with this chapter is exempt from state building code accessibility laws, RCW 19.27.031(5).

(6) Temporary worker housing built in compliance with this chapter which is subsequently converted to another use becomes subject to all local requirements for such use as enforced by the authority having jurisdiction.

(7) This chapter does not apply to:

(a) Housing built for use by the general public which is governed by chapter 59.18 RCW (Residential Landlord-Tenant Act) or chapter 59.20 RCW (Mobile Home Landlord-Tenant Act);

(b) Factory assembled structures as defined in this chapter, except for the requirements in subsection (8) of this section; and

(c) The construction of structures governed by the state building code and enforced by the authority having jurisdiction.

(8) This chapter is limited to issuing a construction permit for factory assembled structures to meet the following requirements:

(a) On-site installation; and

(b) Inspection of the site, foundation, and hook-ups, including, but not limited to: Potable water, sewage disposal systems, or gas connections.

[Statutory Authority: RCW 70.114A.081. 99-03-065, § 246-359-005, filed 1/18/99, effective 2/18/99.]

WAC 246-359-010 Definitions. For the purposes of this chapter, the following words and phrases will have the following meanings unless the context clearly indicates otherwise:

(1) "Alter" or "alteration" means any change, major repair, addition or modification in construction.

(2) "Architect" means an individual licensed by chapter 18.08 RCW to practice in the state of Washington.

(3) "Construction permit" means a permit issued by the department which allows the applicant to construct structures according to this chapter.

(4) "Construction standard" means temporary worker housing construction code as defined in RCW 70.114A.081.

(5) "Department" means the Washington state department of health.

(6) "Dormitory" means a building or portion of a building, designed to provide group sleeping accommodations for temporary workers.

(7) "Dwelling unit" means a shelter, building, or portion of a building, for a family that may include cooking, eating, sleeping and sanitation facilities and that is physically separated from other nonsleeping and common-use areas.

(8) "Engineer" means an individual licensed by chapter 18.43 RCW to practice in the state of Washington.

(9) "Factory assembled structures" or "FAS" means those structures under the authority of chapter 43.22 RCW including:

(a) Mobile and manufactured homes;

(b) Commercial coaches;

(c) Recreational vehicles;

(d) Recreational park trailers; and

(e) Factory-built housing which is any structure designed for human occupancy other than a manufactured or mobile home, where the structure or any room of which is either entirely or substantially prefabricated or assembled at a place other than a building site.

(10) "Family" means two or more persons related by blood or marriage or a group of persons living together in a dwelling unit.

(11) "Floor area" is the area included within the surrounding exterior walls of a building or portion thereof.

(12) "Habitable room" or "habitable space" is a room or space in a structure with a minimum seven foot ceiling used for living, sleeping, eating, or cooking. Bathrooms, toilet compartments, closets, halls, storage or utility space, and similar areas, are not considered habitable space.

(13) "Jurisdiction having authority" means, a local county or city building or health or zoning or public works department or state department of health or ecology or labor and industries, etc.

(14) "Labor camp" means the temporary labor camp requirements of WAC 296-307-160 of the Washington Industrial Safety and Health Act of 1993, chapter 49.17 RCW as amended September 10, 1994.

(15) "Occupant" means a temporary worker or a person who resides with a temporary worker at a housing site.

(16) "State building code" means the building code, plumbing code, mechanical code, and fire code as referenced under RCW 19.27.031.

(17) "Special inspector" means a person paid at the applicant's expense to conduct special inspections when the department determines the required inspections are not sufficient.

(18) "Temporary worker" means a person employed intermittently and not residing year-round at the same site.

(19) "Temporary worker housing" or "TWH" means a place, area, or piece of land where sleeping places or housing sites are provided by an employer for his or her employees or by another person, including a temporary worker housing operator, who is providing such accommodations for employees, for temporary, seasonal occupancy, and includes "labor camps" under RCW 70.54.110.

(20) "Temporary worker housing (TWH) occupancies" means buildings, structures or portions thereof used for occupancy by temporary workers.

(21) "WISHA" means the Washington Industrial Safety and Health Act, chapter 49.17 RCW administered by the state of Washington department of labor and industries. Temporary labor camp requirements of WAC 296-307-16001 are in force for temporary labor camps.

[Statutory Authority: RCW 70.114A.081. 99-03-065, § 246-359-010, filed 1/18/99, effective 2/18/99.]

WAC 246-359-020 Powers and duties of the department of health. The department:

(1) Is authorized and directed to enforce all the provisions of this chapter, according to the laws as enacted by the Washington state legislature.

(2) Has the power to issue written interpretations of this chapter as long as the interpretations are in conformance with the intent and purpose of this chapter and the regulated community is informed of these interpretations.

(3) May adopt and enforce rules and supplemental regulations to clarify the application of the provisions of this chapter consistent with the intent and purpose of this chapter.

[Statutory Authority: RCW 70.114A.081. 99-03-065, § 246-359-020, filed 1/18/99, effective 2/18/99.]

WAC 246-359-030 Cooperation with the department of health—Right of entry. (1) **Department authority.** The department has authority to enter any building or area used for temporary worker housing, at reasonable times to:

(a) Inspect the site for compliance with this chapter and related standards; and

(b) Determine, based on reasonable cause, if a building or condition on the premises is unsafe, dangerous or hazardous.

(2) **Refusal of entry.** When the owner or person having lawful control or supervision authority refuses entry or has required a warrant, the department will seek remedies provided by law to secure entry to the temporary worker housing site.

(3) **Occupied temporary worker housing.** The department must present credentials to the occupant and request the right to enter a dormitory or dwelling unit when temporary workers are in residence.

(4) **Unoccupied temporary worker housing.** When a dormitory or dwelling unit does not have temporary workers in residence, the department must make a reasonable effort to locate the owner or person having lawful control or supervision of the temporary worker housing to request entry.

[Statutory Authority: RCW 70.114A.081. 99-03-065, § 246-359-030, filed 1/18/99, effective 2/18/99.]

WAC 246-359-040 Appeals. (1) The department may deny, suspend, modify, or revoke a permit in any case in which it finds that there has been a failure or refusal to comply with the requirements of chapter 70.114A RCW or this chapter.

(2) The department's notice of a denial, suspension, modification, or revocation of a license will be consistent with RCW 43.70.115. An applicant or license holder has the right to an adjudicative proceeding to contest a decision.

(3) An applicant who contests a department permit decision must, within twenty-eight days of receipt of the decision:

(a) File a written application for an adjudicative proceeding by a method showing proof of receipt with the Administrative Hearings Unit, Department of Health, PO Box 47879, Olympia, WA 98504-7879; and

(b) Include in or with the application:

(i) A specific statement of the issue or issues and law involved;

(ii) The grounds for contesting the department decision; and

(iii) A copy of the contested department decision.

(4) The proceeding is governed by the Administrative Procedure Act, chapter 34.05 RCW, this chapter, and chapters 246-08 and 246-10 WAC. If a provision in this chapter conflicts with chapter 246-08 or 246-10 WAC, the provision in this chapter governs.

[Statutory Authority: RCW 70.114A.081. 99-03-065, § 246-359-040, filed 1/18/99, effective 2/18/99.]

WAC 246-359-050 Minor variances to the temporary worker housing construction standard. An applicant may apply for a minor variance from the requirements of this chapter by filing a written request with the department.

(1) **Responsibilities of applicant.** If requesting a minor variance, an applicant must:

(a) Submit the following information in writing:

(i) The specific requirement or requirements from which the variance is requested;

(ii) Adequate justification that the variance is needed to obtain a beneficial use of the housing or to prevent a practical difficulty; and

(iii) How the variance will achieve the same result as the requirement and any specific alternative measures to be taken to protect the health and safety of the occupants;

(b) Pay a fee set by the department according to WAC 246-359-990, Table I; and

(c) Follow the process stated in WAC 246-359-060, alternate construction, when applicable.

(2) **Department response.** The department will provide a written response to the applicant within forty-five days of receipt of the minor variance request. The written response will state the acceptance or denial of the variance, including the reasons for the department's decision. At a minimum the department will make its decision based on:

(a) The applicant's request as described in subsection (1) of this section;

(b) Research into the variance request; and

(c) Expert advice.

(3) **Applicant's response to denials.** According to chapter 34.05 RCW the applicant has twenty-one days after receiving the department's written denial, of the variance request, to contest the decision.

[Statutory Authority: RCW 70.114A.081. 99-03-065, § 246-359-050, filed 1/18/99, effective 2/18/99.]

WAC 246-359-060 Architect or engineer of record and plan submittal responsibilities. (1) The department will require construction documents to be prepared by an architect or engineer under:

(a) WAC 246-359-600, alternate construction;

(b) WAC 246-359-710, installation requirements for factory assembled structures;

(c) WAC 246-359-720, installation requirements for manufactured homes.

(2) The applicant must provide the name of the architect or engineer of record on the construction permit application.

(3) The applicant is responsible to notify the department, in writing, when the architect or engineer of record changes or is no longer able to review and coordinate all the necessary submittal documents for compatibility with the design of the building.

[Statutory Authority: RCW 70.114A.081. 99-03-065, § 246-359-060, filed 1/18/99, effective 2/18/99.]

WAC 246-359-070 Application and construction documents required for plan review. (1) To have construction documents reviewed the applicant must submit to the department:

(a) A completed and signed application, on a form provided by the department, for each structure (individual building);

(b) The required plan review fee, according to WAC 246-359-990;

(c) Two sets of construction documents, on substantial paper, including:

(i) Plans and diagrams drawn to scale;

(ii) Specifications;

(iii) Computations; and

(iv) Other documents needed to determine if the provisions of this chapter and related state rules are being met, for example solid waste disposal management plan or soil testing;

(d) When applicable, manufacturer's installation instructions as required for factory assembled structures, WAC 246-359-710, and manufactured homes, WAC 246-359-720;

(e) Proof of an adequate approved potable water supply to meet the intended use of the temporary worker housing and which meets the requirements of chapters 246-290 and 246-291 WAC (water rules) and WISHA;

(f) Copy of the on-site sewage system permit from the jurisdiction having authority;

(g) Proof of a water right permit from the department of ecology, when required;

(h) Proof of current approval from labor and industries, when required, for factory assembled structures; and

(i) Proof the project meets zoning requirements as established for height, setback and road access under the authority having jurisdiction.

(2) The plans and specifications must clearly identify in detail the location, nature and extent of the work proposed.

(3) The department will only begin plan review when:

(a) All the documents required in this section are submitted; and

(b) The plan review fee is received.

(4) The department can refund up to eighty percent of the plan review fee if the applicant submits a written request to stop the project before the plan review process is complete. Refunds are based on the plan review fee paid as required by Table I in WAC 246-359-990 and the amount of plan review completed as determined by the department.

(5) The department will charge an additional plan review fee according to Table I in WAC 246-359-990, when:

(a) Site inspections determine the project has not been built according to the approved construction documents and an additional plan review is required; or

(b) Revised construction documents are submitted after approval of the initial construction documents.

[Statutory Authority: RCW 70.114A.081. 99-03-065, § 246-359-070, filed 1/18/99, effective 2/18/99.]

WAC 246-359-080 Plan review approval and expiration of plan approval. (1) The department will notify the applicant in writing:

(a) With a "plan review approval letter" when the construction documents meet the requirements of this chapter; or

(b) With a "not approved letter" when the construction documents do not meet the requirements of this chapter and a resubmission of plans or documents is required by the department for approval.

(2) The applicant has a period of one year from the date of the plan review approval letter to submit the construction permit fee or the plan review approval will expire.

(3) The department will destroy all construction documents related to the project when the plan review approval expires.

(4) To renew action on an expired plan review the applicant must resubmit the construction documents and pay a new plan review fee to the department as required in WAC 246-359-990.

(5) Construction documents modified after the department issues approval must be resubmitted for approval with an additional fee as specified in WAC 246-359-070.

[Statutory Authority: RCW 70.114A.081. 99-03-065, § 246-359-080, filed 1/18/99, effective 2/18/99.]

WAC 246-359-090 Issuing and maintaining a construction permit. (1) The department will issue a construction permit when:

(a) Construction documents are approved according to WAC 246-359-080; and

(b) Permit and inspection fees are paid according to WAC 246-359-990.

(2) Construction can begin after the applicant is issued a construction permit by the department;

(3) The following conditions, at a minimum, must be met during construction:

(a) The "inspection record card" must be posted in a visible location at the worksite and be readily accessible to the inspector at the worksite; and

(b) The approved plans must be readily available to the inspector during all scheduled inspections.

(4) The department will void the permit and the applicant's right to continue construction when:

(a) The plans are changed, modified or altered without prior approval by the department as specified in WAC 246-359-080;

(b) Any deviation in construction or design is made from the approved plans; and

(c) The inspection record card and the approved plans are not readily and easily available to the inspector.

[Statutory Authority: RCW 70.114A.081. 99-03-065, § 246-359-090, filed 1/18/99, effective 2/18/99.]

WAC 246-359-100 Expiration and extension of construction permits. (1) **Permit expiration.** The permit will be considered null and void one year from the date the permit was issued if the applicant:

(a) Has not initiated the work authorized by the permit;

(b) Suspends or abandons the authorized work at any time after the work has begun by not calling for the next required inspection within one year after a required inspection;

(c) Has not applied for a time extension according to the requirements in subsection (2) of this section.

(2) **Permit extension.** The applicant can apply for a one time only extension when the request is made in writing to the department:

(a) Before the permit expires;

(b) Stating reasons satisfactory to the department;

(c) The original plans and specifications will be used and no changes have been made or are planned to be made; and

(d) The applicable standards have not changed.

(3) Any applicant who does not apply for an extension according to the requirements in this section cannot resume work unless the applicant:

(a) Resubmits plans according to WAC 246-359-070; and

(b) Pays full plan review and permit fee according to WAC 246-359-990.

(4) The department can refund up to eighty percent of the construction permit fee if the applicant submits a written request before construction starts. The refund will be determined by the department based on the permit fee paid as required by Table I in WAC 246-359-990.

[Statutory Authority: RCW 70.114A.081. 99-03-065, § 246-359-100, filed 1/18/99, effective 2/18/99.]

WAC 246-359-110 Construction without a permit. (1) Construction of temporary worker housing allowed by this chapter can only begin after a construction permit has been issued by the department as described in WAC 246-359-090.

(2) A person who begins any work without a construction permit will be subject to an investigation and an investigation fee as described in WAC 246-359-990 whether or not a permit is then or subsequently issued. An investigation and investigation fee will be in addition to any other "additional" inspections or fees described in WAC 246-359-990.

(3) The department will determine if the person initiating building or work without a required construction permit is:

(a) Under the authority of this chapter and must follow the construction permit process defined in this chapter; or

(b) Found to be outside the authority of this chapter and must be reported to the jurisdiction having authority and the prosecuting attorney of that jurisdiction.

[Statutory Authority: RCW 70.114A.081. 99-03-065, § 246-359-110, filed 1/18/99, effective 2/18/99.]

WAC 246-359-120 Required inspections. The department or its designee, when notified by the applicant in writing has authority to conduct all of the inspections described in this section.

(1) **Site/foundation inspection.** To be made after excavations for footings are complete, and after any required forms and reinforcing steel are in place, **but** before any concrete has been placed.

(2) **Concrete slab or under-floor inspection.** To be made after all in-slab or under-floor building service equipment, conduit, piping accessories and other ancillary equipment items are in place, **but** before any concrete is placed or floor sheathing installed, including the subfloor.

(3) **Framing/rough-in inspection.** To be made after the roof, all framing, wall, and roof members are in place including fire blocking and bracing, heating, and rough electrical and plumbing has been installed.

(4) **Final inspection.** To be made after finish grading and the building is completed and ready for occupancy.

(5) **Additional inspections.** To be made after the applicant has received notification that an additional inspection or inspections are necessary. The department will conduct the following additional inspections to:

(a) Assure the requirements of this chapter are being met, specifically to verify:

(i) Stop work orders, WAC 246-359-130, are adhered to;

(ii) Approved plans, according to WAC 246-359-080, have not been altered without prior department approval; and

(iii) A construction permit has been issued according to WAC 246-359-090;

(b) Determine compliance with other required laws or ordinances necessary to enforce this chapter; and

(c) Determine if an approved variance is being followed, when verification cannot be determined through the inspections described in subsections (1) through (4) of this section.

(6) **Special inspections.** To be made by a special inspector when the applicant is building to the alternate construction standards and the inspections required in subsections (1) through (5) of this section are not sufficient to determine compliance with the alternate construction methods.

(7) **Reinspections.** Reinspections will be conducted and a reinspection fee charged for each reinspection conducted for the following reasons:

(a) Work for which an inspection is requested and is not complete;

(b) Required corrections called for have not been made;

(c) The inspection record card is not posted or readily available at the worksite;

(d) The approved plans are not readily available to the inspector; and

(e) The inspector's request for equipment or information was not provided at the site preventing the inspector from conducting the scheduled inspection.

[Statutory Authority: RCW 70.114A.081. 99-03-065, § 246-359-120, filed 1/18/99, effective 2/18/99.]

WAC 246-359-130 Stop work orders. (1) The department, upon notifying the applicant in writing, will order work to be stopped when the work being done is found to be contrary to:

(a) The approved plans;

(b) The requirements of this chapter; or

(c) Other laws or ordinances required and necessary to enforce this chapter at a minimum as stated in WAC 246-359-005(4), applicability.

(2) If the department finds work being done contrary to subsection (1) of this section the department, in addition to notifying the applicant in writing, will post a "stop work order" on the construction site.

(3) The applicant is prohibited from continuing any work or causing any work to be performed until solutions to rectify the conditions causing the stop work order have been approved by the department.

(4) The department will document removal of the stop work order by:

(a) Providing the applicant written authorization to proceed with the work; and

(b) Removing or causing the "stop work order" to be removed.

[Statutory Authority: RCW 70.114A.081. 99-03-065, § 246-359-130, filed 1/18/99, effective 2/18/99.]

WAC 246-359-140 Certificate of completion. (1) The department will issue a "certificate of completion" when:

(a) The inspector determines the project is completed in compliance with the approved construction documents;

(b) The department determines the project is in compliance with this chapter and related rules including:

(i) Proof the potable water supply is approved and adequate to meet the requirements of chapters 246-290 and 246-291 WAC (water rules) and WISHA;

(ii) Proof the sewage disposal system has been approved by the jurisdiction having authority, for example, city or county health or public works department, state department of health or state department of ecology; and

(iii) Proof the electrical system has been approved by the jurisdiction having authority, for example, Washington state department of labor and industries or the city building or planning departments.

(2) **Approved to apply for a license.** The applicant can apply for a temporary worker housing license according to chapter 246-358 WAC after receiving a certificate of completion from the department.

[Statutory Authority: RCW 70.114A.081. 99-03-065, § 246-359-140, filed 1/18/99, effective 2/18/99.]

WAC 246-359-150 Site requirements. (1) The site used for temporary worker housing must be:

(a) Adequately drained and not subject to periodic flooding;

(b) Located a distance of at least two hundred feet from all surface water;

(c) Located so the drainage from and through the temporary worker housing will not endanger any domestic or public water supply;

(d) Graded, ditched, and made free from depressions which allow water to become a nuisance;

(e) Adequate in size to prevent overcrowding of necessary structures; and

(f) Located on a slope which is not more than one unit (inches, feet, etc.) vertical per twenty units horizontal.

(2) Any structure used for sleeping or preparing and serving food must be located at least five hundred feet from any area in which livestock is kept.

(3) All temporary worker housing structures must be located a minimum of ten feet from any other structure or building.

[Statutory Authority: RCW 70.114A.081. 99-03-065, § 246-359-150, filed 1/18/99, effective 2/18/99.]

WAC 246-359-160 Temporary worker housing minimum floor area and ceiling height. (1) Rooms used for sleeping purposes only must have a minimum of fifty square feet of floor space for each occupant.

(2) Rooms used for cooking, living, and sleeping must have a minimum of seventy square feet for the first occupant and fifty-square feet for each additional occupant.

(3) All habitable rooms and spaces including halls, bathrooms and toilet compartments must have at least a seven foot clear height from the floor to the ceiling or exposed ceiling framing.

[Statutory Authority: RCW 70.114A.081. 99-03-065, § 246-359-160, filed 1/18/99, effective 2/18/99.]

WAC 246-359-170 Wood framed construction and concrete masonry unit (CMU) general limitations. (1) When building with wood or CMU as required by WAC 246-359-200 through 246-359-580 the following requirements apply:

(a) Floor area must be limited to three thousand six hundred square feet per building;

(b) Height must be limited to one story; and

(c) All floor surfaces must be above grade, no basements.

(2) When building to WAC 246-359-600, alternate construction, the limitations in subsection (1) of this section do not apply.

[Statutory Authority: RCW 70.114A.081. 99-03-065, § 246-359-170, filed 1/18/99, effective 2/18/99.]

WAC 246-359-180 Concrete footings and foundations for wood framed construction. (1) Concrete used for footings and foundations must have a minimum compressive strength of two thousand pounds per square inch (psi). Concrete must be mixed and delivered in accordance with the requirements of ASTM C94 (Ready-Mix Concrete), or may be field mixed. Field mixed concrete will be subject to independent compressive strength testing and special inspection.

(2) Concrete footings must be placed on firm, undisturbed soil.

(3) Concrete footings must be continuous, be a minimum of twelve inches wide by six inches thick, be reinforced with a minimum of two No. 4 continuous rebar, and be at least eighteen inches below finished grade measured from the bottom of the footing.

(4) Concrete foundations must be a minimum of six inches thick, be reinforced with a minimum of two continuous horizontal No. 4 at the top, be reinforced vertically with No. 4 at twenty-four inches on center, extend at least six inches above the finished grade, and have a total height of not greater than forty-eight inches.

(5) Concrete foundations that are formed by a thickened concrete slab edge as part of a slab on grade floor must be reinforced with two pieces of No. 4 rebar in the upper part and two pieces of No. 4 rebar in the lower part of the foundation. The concrete floor will be reinforced according to WAC 246-359-430. The thickened concrete slab edge must extend at least eighteen inches below finished grade, be at least twelve inches in width, and provide a slab height of at least six inches above finished grade.

(6) Where the walls are of wood construction, the treated foundation plates or sills must be bolted to the foundation or foundation wall with not less than one-half inch nominal diameter steel bolts embedded at least seven inches into the concrete and spaced not more than seventy-two inches apart. There must be a minimum of two bolts per piece with one bolt located within twelve inches of each end of each piece. A properly sized nut and washer must be tightened on each bolt to secure the place.

[Statutory Authority: RCW 70.114A.081. 99-03-065, § 246-359-180, filed 1/18/99, effective 2/18/99.]

WAC 246-359-200 Wood framed construction. (1) Buildings constructed using wood materials must follow the requirements of WAC 246-359-001 through 246-359-340 to comply with this chapter.

(2) Wood structural members in contact with the ground, and/or concrete must be pressure treated and must bear the proper grade mark of an approved inspection/testing agency.

[Statutory Authority: RCW 70.114A.081. 99-03-065, § 246-359-200, filed 1/18/99, effective 2/18/99.]

WAC 246-359-210 Treated wood foundations for wood framed construction. (1) All lumber and plywood used for wood foundation systems must be pressure treated and bear the grade mark FDN (foundation grade) or better.

(2) Where FDN lumber and plywood is cut or drilled after treatment, the cut surface must be field treated with a preservative that is designated for that purpose.

(3) Hot-dipped zinc-coated steel nails or stainless steel fasteners will be used as fasteners for treated wood foundation walls. Electrogalvanized nails or staples and hot-dipped zinc-coated staples cannot be used.

(4) Treated wood foundations must have composite footings consisting of a minimum two-by-eight lumber footing plate set eighteen inches below finished grade on top of a layer of gravel, coarse sand or crushed stone. The gravel, sand, or crushed stone footing will have a width of not less than sixteen inches and a depth of not less than six inches, and must be placed in firm, undisturbed soil.

(5) The gravel, sand, or crushed stone footing must consist of:

(a) Washed and graded gravel free from organic, clayey or silty soils with a maximum stone size not exceeding three-fourths inch;

(b) Coarse sand free from organic, clayey, or silty soils with a minimum grain size of one-sixteenth inch; or

(c) Crushed stone with a maximum size of one-half inch.

(6) Treated wood foundation walls must be constructed of two-by-six studs at a minimum of sixteen inches on center with a double two-by-six top plate. Cover the studs with a minimum one-half inch thick pressure treated exterior plywood sheathing placed on the exterior of the studs. Treated wood foundation walls will not be greater than forty-eight inches measured from the bottom of the footing plate to the top of the double top plate.

(7) Joints in the footing plate and top plates must be staggered at least one stud space. Framing at locations where openings occur in the wall and floor systems above, and at other points of concentrated loads must have studs added at those points to support the concentrated loads.

(8) Before backfilling, cover the gravel, sand, or crushed stone appearing outside the treated wood foundation wall with strips of six-mil thick polyethylene sheeting, Type 30 felt, or equivalent material with adjacent strips lapped to provide for water seepage while preventing excessive infiltration of fine soils.

(9) Backfill on the outside to eight inches or more below the top of the treated wood foundation walls. Backfill on the inside of the treated wood foundation walls (crawl space) a minimum depth of six inches above the top of the footing plate.

[Statutory Authority: RCW 70.114A.081. 99-03-065, § 246-359-210, filed 1/18/99, effective 2/18/99.]

WAC 246-359-220 Floor framing for wood framed construction. (1) **Girders.**

(a) Girders supporting floor joists must be a minimum four-by-six Hem-Fir #2, spaced not more than eight feet on center, and placed at least twelve inches above ground.

(b) Girders must be continuous, or must be spliced over supports. When a girder is spliced over a support, a positive tie to the support must be provided.

(c) Each end of each girder member must have a minimum three inch of bearing on treated wood plates or treated wood posts.

(2) **Floor joists.**

(a) Floor joists must be a minimum two-by-six spaced sixteen inches on center or two-by-eight spaced twenty-four inches on center, Hem-Fir #2 or better, spanning not more than eight feet between supports, and placed at least eighteen inches above ground.

(b) Floor joists must be continuous or spliced only over a support with a minimum three-inch lap.

(c) The end of each joist must have not less than three inch bearing on treated wood plate.

(d) Notches on the ends of joists cannot not exceed one fourth the joist depth. Holes bored in joists cannot be within two inches of the top or bottom of the joist, and the diameter of any such hole cannot exceed one-third the depth of the joist. Notches in the top or bottom of joists cannot exceed one-sixth the depth and cannot be located in the middle third of the span.

(e) Floor joists must have solid blocking at the ends and at each support. Solid blocking cannot be less than two inches nominal in thickness and the full depth of the joist.

(3) **Interior bearing.** Interior bearing footings (pads) must be of plain concrete at least sixteen inches by sixteen inches by eight inches thick placed on firm undisturbed soil.

(4) **Ventilation.** Under floor areas (crawl spaces) must be ventilated by one-fourth inch screened openings of not less than one square foot of opening for each one hundred fifty square feet of under-floor area.

(5) **Supporting interior bearing partitions.** Interior bearing partitions perpendicular to floor joists must not be offset from support girders more than the joist depth. Interior bearing partitions parallel to the floor joists must be supported by a doubled floor joist located directly under the interior bearing partition.

(6) **Subflooring.** Subflooring must be structural wood panels (plywood or OSB), particleboard subfloor or combination subfloor-underlayment, or solid wood.

(a) Structural wood panels will be tongue-and-groove installed perpendicular to the floor joists with end joints occurring over floor joists. The minimum thickness must be five-eighth inches (eleven-sixteenths inches) over floor joists spaced sixteen inches on center and three-fourths inches (twenty-five thirty-seconds inches) over floor joists spaced twenty-four inches on center. Structural wood panels must be grade stamped for use and span. Secure structural wood panels to the floor joist system by use of either nails or glue and nails combination. In both systems, nails must be 8d common or deformed shank, spaced six inches on center at the edges and twelve inches on center at intermediate supports.

(b) Particleboard subfloor or combination subfloor-underlayment must be installed perpendicular to the floor joists. The minimum thickness must be five-eighths inches over floor joists spaced sixteen inches on center and three-fourths inches over floor joists spaced twenty-four inches on center. Particleboard must be grade stamped for use and span. Secure particleboard to the floor joist system by use of either nails or glue and nails combination. In both systems, nails must be 8d common or deformed shank, spaced six

inches on center at the support edges and twelve inches on center at intermediate supports.

(c) Solid wood must be a minimum size of one-inch by six-inch nominal tongue-and-groove wood strip flooring applied perpendicular or diagonally to the floor joists. Secure solid wood flooring to the floor joist system by use of either nails or glue and nails combination as follows for:

(i) Wood strip flooring six inches or less must be nailed to each floor joist by "2-8d" common or box nails; or

(ii) Wood strip flooring greater than six inches must be nailed to each floor joist by "3-8d" common or box nails.

[Statutory Authority: RCW 70.114A.081. 99-03-065, § 246-359-220, filed 1/18/99, effective 2/18/99.]

WAC 246-359-230 Wall framing for wood framed construction. (1) Exterior walls and interior partitions must be framed as follows:

(a) Studs must be minimum two-by-four wood, Hem-Fir stud grade or better, spaced not more than sixteen inches on center, support no more than one ceiling and one roof, nor exceed eight feet in height for exterior walls.

(b) Studs must be placed with their wide dimension perpendicular to the wall. Not less than three studs must be installed at each corner of an exterior wall.

(c) Studs must be capped with double top plates installed to provide overlapping at corners and at intersections with other partitions. End joints in double top plates must be offset at least forty-eight inches.

(d) Studs must have full bearing on a plate or sill not less than two inches nominal in thickness having a width not less than that of the wall studs.

(2) Headers. All openings four feet wide or less in bearing walls must be provided with headers consisting of either two pieces of two-by-eight Hem-Fir #2, or better, placed on edge and securely fastened together or one piece of four-by-eight Hem-Fir #2 or better. All openings over four feet and up to eight feet wide in bearing walls must be provided with headers consisting of two pieces of two-by-twelve Hem-Fir #2 or better, placed on edge and securely fastened together, or one piece of four-by-twelve Hem-Fir #2 or better.

(3) Wall bracing. Exterior walls must be braced with one of the following methods:

(a) Wood boards of five-eighths inch net minimum thickness applied diagonally to the studs and face nailed with 2-8d common nails per stud.

(b) Minimum forty-eight inch width of wood structural panel sheathing (plywood) with a minimum thickness of three-eighths inches applied vertically at each corner. Provide solid blocking at all edges not supported by studs and secure to studs with 6d common or deformed shank nails spaced at six inches on center at edges and twelve inches on center at intermediate supports. Sheathing must extend from treated plate through double top plate.

(4) Where plumbing, heating or other pipes are placed in studs, a metal tie not less than sixteen galvanized gauge and one and one-half inches wide must be fastened to each plate across and to each side of the opening.

[Statutory Authority: RCW 70.114A.081. 99-03-065, § 246-359-230, filed 1/18/99, effective 2/18/99.]

WAC 246-359-240 Exterior wall covering for wood framed construction. (1) All weather-exposed surfaces must have a weather resistive barrier. Such barrier must be of waterproof building paper or asphalt saturated felt. Building paper, felt, or equivalent materials must be covered with siding as a protection against damage. Weatherproof sheathing may be used to meet this requirement.

(2) When weatherproof sheathing is used for the weather resistive barrier protection, it must be of the exterior type not less than three-eighths inch thick. Joints must occur over framing members and must be protected by built-in edge laps, a continuous wood batten, caulking, flashing, or by an equivalent material installed per the manufacturer's specifications.

(3) All wood siding and trim must be painted to protect from weather damage.

(4) Flashing. All exterior openings exposed to the weather must be flashed in such a manner as to make them weatherproof.

[Statutory Authority: RCW 70.114A.081. 99-03-065, § 246-359-240, filed 1/18/99, effective 2/18/99.]

WAC 246-359-250 Roof framing for wood framed construction and concrete masonry units (CMU). (1) Roof framing must have a minimum slope of three units vertical to twelve units horizontal, and must be framed with one of the following methods:

(a) Factory built trusses. Installed per manufacturer's directions and spaced not more than twenty-four inches on center. Roof trusses must be supported laterally at points of bearing by solid blocking to prevent rotation and lateral displacement;

(b) Rafter spans. Allowable rafter spans for Hem-Fir #2 or better must be in accordance with the spans and load conditions listed in Tables 250-A, 250-B or 250-C;

(c) Rafters. Rafters must be framed directly opposite each other at the ridge. There must be a ridge board at least one inch nominal thickness at all ridges and not less in depth than the cut end of the rafter;

(d) Notching at the ends of rafters cannot exceed one fourth the depth. Notches in the top or bottom must not exceed one sixth the depth and must not be located in the middle one third of the span;

(e) Holes bored in rafters must not be within two inches of the top or bottom and their diameter must not exceed one third the depth of the rafter; and

(f) Rafters must be supported laterally at points of bearing by solid blocking of the same material to prevent rotation and lateral displacement.

Table 250-A
Western Wood Products Table for Hem-Fir #2
Rafter (L/240 Deflection Limit) 30# Snow Load and 10# Dead Load

Rafter Size	Spacing—inches on center	Span—feet-inches
2 x 6	12	12-7
2 x 6	16	11-5
2 x 6	24	9-7
2 x 8	12	16-7
2 x 8	16	14-11

Rafter Size	Spacing—inches on center	Span—feet-inches
2 x 8	24	12-2
2 x 10	12	21-0
2 x 10	16	18-2
2 x 10	24	14-10
2 x 12	12	24-4
2 x 12	16	21-1
2 x 12	24	17-3

Table 250-B
Western Wood Products Table for Hem-Fir #2
Rafter (L/240 Deflection Limit) 40# Snow Load and 10# Dead Load

Rafter Size	Spacing—inches on center	Span—feet-inches
2 x 6	12	11-5
2 x 6	16	10-5
2 x 6	24	8-7
2 x 8	12	15-1
2 x 8	16	13-4
2 x 8	24	10-10
2 x 10	12	18-9
2 x 10	16	16-3
2 x 10	24	13-3
2 x 12	12	21-9
2 x 12	16	18-10
2 x 12	24	15-5

Table 250-C
Western Wood Products Table for Hem-Fir #2
Rafter (L/240 Deflection Limit) 60# Snow Load and 10# Dead Load

Ceiling Joist Size	Spacing—inches on center	Span—feet-inches
2 x 8	12	13-0
2 x 8	16	11-3
2 x 8	24	9-2
2 x 10	12	15-10
2 x 10	16	13-9
2 x 10	24	11-3
2 x 12	12	18-5
2 x 12	16	15-11
2 x 12	24	13-0
2 x 14	12	20-7
2 x 14	16	17-10
2 x 14	24	14-6

(2) The department will allow site built trusses accompanied by structural calculations prepared by a structural engineer.

(3) Trimmer and header rafters must be doubled when the span of the header exceeds four feet. The ends of the header rafters more than six feet long must be supported by framing anchors or rafter hangers unless bearing on a beam, partition, or wall.

(4) Rafters must be nailed to adjacent ceiling joists to form a continuous tie between exterior walls when such joists are parallel to the rafters. Where not parallel, rafters must be nailed to minimum one-by-four cross ties.

(5) Rafter cross ties must be spaced not more than four feet on center, located immediately above the ceiling joists.

(6) Rafter and truss ties must be installed per manufacture's instructions.

(7) Roof assembly must have rafter and truss ties to the wall below and spaced not more than four feet on center.

[Statutory Authority: RCW 70.114A.081. 99-03-065, § 246-359-250, filed 1/18/99, effective 2/18/99.]

WAC 246-359-300 Ceiling framing for wood framed construction and concrete masonry units (CMU). (1) Notching at the ends of ceiling joists must not exceed one fourth the depth. Notches in the top or bottom must not exceed one sixth the depth and must not be located in the middle one third of the span.

(2) Holes bored in ceiling joists must not be within two inches of the top or bottom and their diameter must not exceed one third the depth of the rafter.

(3) Ceiling joists must be supported laterally at points of bearing by solid blocking to prevent rotation and lateral displacement.

(4) Allowable ceiling joist spans for Hem-Fir #2 or better must be in accordance with the spans and load conditions listed in Table 300-A.

(5) The department will allow spans using other wood species or grade or other load conditions when accompanied by structural calculations prepared by a structural engineer.

Table 300-A
Western Wood Products Table for Hem-Fir #2
Ceiling Joists 10# Dead Load

Ceiling Joist Size	Spacing—inches on center	Span—feet-inches
2 x 6	12	14-5
2 x 6	16	12-8
2 x 6	24	10-4
2 x 8	12	18-6
2 x 8	16	16-0
2 x 8	24	13-1
2 x 10	12	22-7
2 x 10	16	19-7
2 x 10	24	16-0
2 x 12	12	26-3
2 x 12	16	22-8
2 x 12	24	18-6

[Statutory Authority: RCW 70.114A.081. 99-03-065, § 246-359-300, filed 1/18/99, effective 2/18/99.]

WAC 246-359-310 Roof sheathing for wood framed construction and concrete masonry units. Roof sheathing shall be structural wood panels (plywood, OSB) with a minimum five-eighths inch thickness, grade stamped for use and span. Secure roof sheathing panels to the roof framing with 8d common nails, spaced six inches on center at the edges and twelve inches on center at intermediate supports.

[Statutory Authority: RCW 70.114A.081. 99-03-065, § 246-359-310, filed 1/18/99, effective 2/18/99.]

WAC 246-359-320 Roof covering materials for wood framed construction and concrete masonry units (CMU). Roof sheathing must be protected by installing a material that has been designed as a roofing covering product. Installation

of the selected roof covering material must be according to manufacturer's instructions and industry standards.

[Statutory Authority: RCW 70.114A.081. 99-03-065, § 246-359-320, filed 1/18/99, effective 2/18/99.]

WAC 246-359-330 Roof framing ventilation for wood framed construction and concrete masonry units (CMU). (1) Ventilation must be provided for enclosed roof framing spaces by providing sixteen-mesh screened openings at:

(a) The eaves;

(b) The gable ends;

(c) The ridge; or

(d) Any combination of (a) through (c) of this subsection.

(2) The minimum amount of ventilation openings must be at the rate of one square foot of net free opening for every three-hundred square feet of attic area.

[Statutory Authority: RCW 70.114A.081. 99-03-065, § 246-359-330, filed 1/18/99, effective 2/18/99.]

WAC 246-359-340 Nailing schedule wood framed construction and concrete masonry units. All nailing must be completed according to Table 340.

Table 340
Nailing Schedule

CONNECTION	NAILING[1]
1. Joist to sill or girder, toenail	3-8d
2. Bridging to joist, toenail each end	2-8d
3. 1" x 6" subfloor or less to each joist, face nail	2-8d
4. Wider than 1" x 6" subfloor to each joist, face nail	3-8d
5. 2" subfloor to joist or girder, blind and face nail	2-16d
6. Sole plate to joist or blocking, typical face nail Sole plate to joist or blocking, at braced wall panels	16d at 16" o.c. 3-16d per 16"
7. Top plate to stud, end nail	2-16d
8. Stud to sole plate	4-8d, toenail or 2-16d, end nail
9. Double studs, face nail	16d at 24" o.c.
10. Doubled top plates, typical face nail Doubled top plates, lap splice	16d at 16" o.c. 8-16d
11. Blocking between joists or rafters to top plate, toenail	3-8d
12. Rim joist to top plate, toenail	8d at 6" o.c.
13. Top plates, laps, and intersections, face nail	2-16d
14. Continuous header, two pieces	16d at 16" o.c. along each edge
15. Ceiling joists to plate, toenail	3-8d
16. Continuous header to stud, toenail	4-8d
17. Ceiling joists, laps over partitions, face nail	3-16d
18. Ceiling joists to parallel rafters, face nail	3-16d
19. Rafter to plate, toenail	3-8d
20. 1" brace to each stud and plate, face nail	2-8d
21. 1" x 8" sheathing or less to each bearing, face nail	2-8d
22. Wider than 1" x 8" sheathing to each bearing, face nail	3-8d
23. Built-up corner studs	16d at 24" o.c.
24. Built-up girder and beams	20d at 32" o.c. at top and bottom and staggered 2-20d at ends and at each splice
25. 2" planks	2-16d at each bearing

[1] Common or boxed nails must be used.

[Statutory Authority: RCW 70.114A.081. 99-03-065, § 246-359-340, filed 1/18/99, effective 2/18/99.]

WAC 246-359-350 Roof connections for concrete masonry units (CMU). (1) Framing members must bear on a two-inch nominal thickness pressure treated plate anchored to the CMU wall with one-half inch diameter bolts. The anchor bolts must be spaced at maximum of six feet on center and a minimum of twelve inches from end of each plate member, and must be embedded into the top of the wall bond beam a minimum of four inches.

(2) Each roof framing member must be secured to the treated plate by installation of a metal tie as approved by the department.

[Statutory Authority: RCW 70.114A.081. 99-03-065, § 246-359-350, filed 1/18/99, effective 2/18/99.]

WAC 246-359-400 Concrete masonry unit (CMU). Buildings constructed using CMU must follow the requirements of WAC 246-359-001 through 246-359-170 and WAC 246-359-400 through 246-359-580 to comply with this chapter.

[Statutory Authority: RCW 70.114A.081. 99-03-065, § 246-359-400, filed 1/18/99, effective 2/18/99.]

WAC 246-359-405 Concrete masonry units (CMU) materials. (1) Solid masonry units must not be used.

(2) **Water.** Water used in mortar or grout must be clean and free of deleterious amounts of acid, alkalis or organic material or other harmful substances.

(3) **Cement.** Cementitious materials for:

(a) Grout must be either lime or portland cement; and

(b) Mortar must be one or more of the following:

(i) Lime;

(ii) Masonry cement;

(iii) Portland cement; or

(iv) Mortar cement.

(4) **Mortar.** Mortar must consist of a mixture of cementitious materials and aggregate to which sufficient water has been added to achieve a workable, plastic consistency.

(5) **Grout.** Grout must consist of a mixture of cementitious materials and aggregate to which water has been added

such that the mixture will flow without segregation of the materials.

(6) **Handling, storage and preparation of materials.** Handling, storage and preparation of materials at the site must conform to the following:

(a) Masonry materials must be stored so that at the time of use the materials are clean and structurally suitable for use.

(b) All metal reinforcement must be free from loose rust and other coatings that would inhibit reinforcing bond.

(c) Concrete masonry units must not be wetted.

(d) Mortar or grout mixed at the job site must be mixed for:

(i) A period of time not less than three minutes; or

(ii) More than ten minutes in a mechanical mixer with the amount of water required to provide the desired workability.

(e) Hand mixing of small amounts of mortar is permitted.

(f) Mortar may be retempered, except that mortar or grout which has hardened or stiffened due to hydration of the cement must not be retempered or used again.

(g) When water has been added to the dry ingredients, at the job site the mixed:

(i) Mortar must not be used after two and one-half hours has passed; and

(ii) Grout must not be used after one and one-half hours has passed.

(h) Mortar and grout dry mixes, blended in the factory, and mixed at the job site must be mixed in mechanical mixers until workable. The on-site mixing time must not exceed ten minutes if the mix is to be acceptable for use.

[Statutory Authority: RCW 70.114A.081. 99-03-065, § 246-359-405, filed 1/18/99, effective 2/18/99.]

WAC 246-359-410 Foundations and footings for concrete masonry units (CMU) walls. (1) Footings for load bearing CMU walls must be continuous concrete having a minimum twelve width-by-ten inch thickness, placed a minimum eighteen inches below the finished grade, and reinforced with a minimum of two No. 4 continuous rebar.

(2) Foundations must be one of the following:

(a) Concrete reinforced vertically and horizontally with No. 4 rebar at twenty-four inches on center; or

(b) CMU reinforced vertically and horizontally with No. 4 rebar and having all cells below finished grade fully grouted.

(3) Vertical reinforcement must be spaced at four feet on center, within twelve inches of each corner, extend at least twenty inches up into the CMU wall, and extend at least six inches into the footing with an additional six inches bent at ninety degrees and tied to the horizontal footing rebar.

(4) Foundations must be six inches in width or the width of the CMU wall, whichever is greater.

[Statutory Authority: RCW 70.114A.081. 99-03-065, § 246-359-410, filed 1/18/99, effective 2/18/99.]

WAC 246-359-420 Placing of concrete masonry units (CMU). (1) CMU must be laid in a running bond pattern with the units in each successive course overlapping the joints in the course below. At corners the length of the corner unit must alternate direction on each successive course.

(2) The mortar must be sufficiently plastic and the units must be placed with sufficient pressure to extrude mortar from the joint and produce a tight joint. Joint furrowing must not exceed the thickness of the shell.

(3) Head joints of open-end CMU designed for use as bond beams that are to be fully grouted need not be mortared.

(4) Surfaces to be in contact with mortar or grout must be clean and free of deleterious materials.

[Statutory Authority: RCW 70.114A.081. 99-03-065, § 246-359-420, filed 1/18/99, effective 2/18/99.]

WAC 246-359-430 Floors for concrete masonry units (CMU). (1) Floors must be concrete slab on grade and not less than three and one-half inches thick reinforced with "6 x 6 10/10 welded wire mesh (wwm)," and be constructed with not less than four sacks of cement per cubic yard.

(2) When concrete is used as the finished floor it must be sealed or finished according to WAC 246-359-530, interior finishes.

[Statutory Authority: RCW 70.114A.081. 99-03-065, § 246-359-430, filed 1/18/99, effective 2/18/99.]

WAC 246-359-440 Walls of concrete masonry units (CMU). (1) **Wall thickness.** CMU blocks used for bearing walls must have a minimum nominal thickness of six inches.

(2) **Rebar cover.** All rebar must be:

(a) Placed within the openings of the hollow masonry units;

(b) Completely embedded in mortar or grout; and

(c) Have a minimum cover of three-fourth inch including the masonry unit. Where masonry is exposed to weather, one and one-half inches of cover is required. Where masonry is exposed to soil, two inches of cover is required.

(3) **Reinforcement.**

(a) Masonry walls must have both vertical and horizontal reinforcement. Spliced rebar must overlap at least twenty inches. Reinforcement must be placed prior to grouting. Bolts must be accurately set and held in place to prevent dislocation during grouting.

(b) Vertical reinforcement must consist of No. 4 rebar placed four feet on center along the full length of walls, on each side of window and door openings, and at corners. Vertical rebar must extend from the top of the foundation to the top of the wall and be grouted in place.

(c) Horizontal reinforcement must consist of bond beams located at four feet above the foundation and repeated at four foot intervals, including one at the top of the wall. Bond beams must be constructed using bond beam masonry units with one continuous No. 4 rebar, grouted in place.

(d) Lintels over door and window openings must be provided and must be sixteen inches deep consisting of bond beam or lintel masonry units extending over the opening and at least twenty inches beyond each side, and with four pieces of No. 4 rebar running the full length of the lintel, grouted in place. The span of lintels over openings must not exceed twelve feet.

(4) **Grouting.**

(a) The grout space must be clean so that all spaces to be filled with grout do not contain mortar projections greater than one-half inch, mortar droppings or other foreign material. Cleanouts must be provided where necessary to clean

and clear the spaces prior to grouting. When cleanouts are needed, they must be sealed before grouting.

(b) Grout must be placed so that all spaces designated to be grouted must be filled with grout and the grout must be confined to those specific spaces.

(c) Where bond beams occur, the grout pour must be stopped a minimum of one-half inch below the top of the masonry.

[Statutory Authority: RCW 70.114A.081. 99-03-065, § 246-359-440, filed 1/18/99, effective 2/18/99.]

WAC 246-359-500 Window construction requirements. (1) All habitable rooms and spaces must be provided with windows the total area of which must be not less than one-tenth of the floor area.

(2) At least one-half of each required window must be able to open for ventilation purposes.

(3) Every sleeping room must have at least one operable window or door for emergency escape or rescue directly opening to an outside area to provide a clear escape away from the building.

(4) Escape or rescue windows must have:

(a) A minimum net clear openable area of five point seven square feet; and

(b) A finished sill height not more than forty-four inches above the floor.

(c) The following minimum net clear openable dimensions:

(i) The height dimension of twenty-four inches; and

(ii) The width dimension of twenty inches.

(5) All operable window openings must be screened with sixteen-mesh material.

[Statutory Authority: RCW 70.114A.081. 99-03-065, § 246-359-500, filed 1/18/99, effective 2/18/99.]

WAC 246-359-510 Door requirements. Temporary worker housing habitable structures:

(1) Must have a primary entrance, which is at a minimum, three foot-by-six foot eight-inch exit door made of solid core wood or other material designed for use as an exterior door.

(2) Must have at least two exit doors when accommodating ten or more occupants. When two exit doors are required, the doors must be placed a distance apart equal to at least one-half of the length of the maximum overall diagonal dimension of the building area used.

(3) Must have all exterior door openings screened with sixteen-mesh material self-closing screen doors.

(4) With a calculated occupant load of fifty occupants or more must have a screen door which swings in the direction of exiting.

(5) With latched screen doors must have a roller type latch.

[Statutory Authority: RCW 70.114A.081. 99-03-065, § 246-359-510, filed 1/18/99, effective 2/18/99.]

WAC 246-359-520 Door landings, stairways and guardrails. (1) **Door landings.** Every door must have, at a minimum, a floor area or landing with:

(a) A width not less than the width of the door or the width of the stairway served, whichever is greater; and

(b) A length not less than thirty-six inches.

(2) **Stairways.** Every stairway having two or more risers must meet the following requirements:

(a) **Rise and run.** The rise of steps and stairs must not be less than four inches nor more than eight inches. The greatest riser height within any flight of stairs must not exceed the smallest by more than three-eighths inch. The run must not be less than nine inches. Stair treads must be of uniform size and shape except the largest tread run within any flight of stairs must not exceed the smallest by more than three-eighths inch.

(b) **Headroom.** Every stairway must have a headroom clearance of not less than 6 feet eight inches.

(3) **Handrails.**

(a) At least one handrail is required when a stairway has three or more risers;

(b) The top of a handrail must be placed not less than thirty-four inches or more than thirty-eight inches above the nosing of the treads.

(c) Handrails must be continuous the full length of the stairs.

(d) The handgrip portion of a handrail must:

(i) Not be less than one and one-quarter inches nor more than two inches in cross-sectional dimension; and

(ii) Have a smooth surface with no sharp corners.

(e) Handrails projecting from a wall must have a space of not less than one and one-half inches between the wall and the handrail.

(4) **Guardrails.** Unenclosed porches, balconies, and landings, which are more than thirty inches above grade or floor below must not be less than thirty-six inches in height and must have intermediate rails spaced such that a sphere four inches in diameter cannot pass through.

[Statutory Authority: RCW 70.114A.081. 99-03-065, § 246-359-520, filed 1/18/99, effective 2/18/99.]

WAC 246-359-530 Interior finishes. (1) Floors must be finished to provide an easily cleanable surface. Acceptable finishes are paint, sheet vinyl, tile, or other materials designed for use as a finished floor surface. All materials must be installed per manufacturer's instructions.

(2) Walls and ceilings must be finished to prevent any injury to an occupant, for example, no protruding nails or other fasteners or any wires.

(3) In toileting and kitchen areas, walls must be finished to provide an easily cleanable surface impervious to moisture.

(4) If material to provide a finished surface for the walls is to be installed, then material such as one-half inch minimum thickness gypsum board (GB) must be secured to the wall structural members by fasteners approved for such attachment such as glue, nails, or screws. If GB is installed, then the joints must be fire taped and the wall surface sealed with paint or covered with another wall finish material.

(5) If materials are installed to provide a finished surface for the ceiling, then material such as five-eighths inch minimum thickness GB must be secured to the ceiling structural members by fasteners approved for such attachment such as

nails or screws. If GB is installed, then the joints must be fire taped and the ceiling surface sealed with paint.

[Statutory Authority: RCW 70.114A.081. 99-03-065, § 246-359-530, filed 1/18/99, effective 2/18/99.]

WAC 246-359-540 Lighting and electrical. (1) The installation of electrical systems and wiring must comply with the state electrical code, chapter 246-46 WAC, as administered by the department of labor and industries and according to the number of outlets or light fixtures required in subsection (2) of this section.

(2) Outlets and light fixtures provided in temporary worker housing must comply with the requirements of subsection (1) of this section and WISHA requirements, including:

(a) Each habitable room must have:

(i) One ceiling light fixture. Additional ceiling light fixtures will be required to comply with the foot candle requirements of chapter 246-358 WAC; and

(ii) One separate floor or wall outlet. Additional outlets will be required as determined by the department to prevent safety hazards when the housing is occupied;

(b) Laundry and toilet rooms, and rooms where people congregate must have at least one ceiling or wall light fixture. Additional ceiling or wall light fixtures will be required:

(i) To comply with the foot candle requirements of chapter 246-358 WAC; and

(ii) As determined by the department to prevent safety hazards when the housing is occupied.

[Statutory Authority: RCW 70.114A.081. 99-03-065, § 246-359-540, filed 1/18/99, effective 2/18/99.]

WAC 246-359-550 Smoke detectors. (1) Temporary worker housing must be provided with approved smoke detectors installed according to the manufacturer's instructions.

(2) Smoke detectors must:

(a) Be installed in each sleeping room;

(b) Be installed at a central point in a corridor or area which gives access to each separate sleeping room; and

(c) Emit a signal when the batteries are low.

(3) In new construction, required smoke detectors must:

(a) Receive their primary power from the building wiring, when the wiring is served from a commercial source; and

(b) Be equipped with a battery backup.

(4) Smoke detector wiring must be permanent and without a disconnecting switch except as required for overcurrent protection.

(5) Battery operated smoke detectors will be accepted:

(a) In existing buildings;

(b) In buildings without commercial power; or

(c) During when alteration, repairs or additions are being conducted to a building.

[Statutory Authority: RCW 70.114A.081. 99-03-065, § 246-359-550, filed 1/18/99, effective 2/18/99.]

WAC 246-359-560 Plumbing. (1) The installation of plumbing systems, fixtures, and fittings must comply with the Uniform Plumbing Code and Uniform Plumbing Code Standards as adopted by the state building code council, chapters 51-46 and 51-47 WAC, except for the following parts of the plumbing code which do not apply:

(a) The provisions for "water conservation performance standards";

(b) The minimum plumbing facilities and requirements for minimum numbers of fixtures, instead the following ratios will apply:

Minimum Number of Required Plumbing Fixtures					
	Water Closets		Lavatory Sinks		Bathtubs or Showers
Dwelling Units	1		1		1
	Male	Female	Male	Female	
Shared Facilities, not in individual dwelling units.	1 per 15 or fraction thereof; with a minimum of 2. (See Note)	1 per 15 or fraction thereof; with a minimum of 2.	1 per 6 or fraction thereof.	1 per 6 or fraction thereof.	1 showerhead for every 10 persons or fraction thereof, for both male and female showers.

Note: Where urinals are provided in addition to water closets, the urinals must be provided in a 1:25 ratio.

(2) The applicant must comply with the following WISHA requirements:

(a) When a toilet is in a separate building from the sleeping room, the toilet room must be at least one-hundred feet but not more than two-hundred feet from the door of each dormitory unit;

(b) Laundry sinks must be provided on a ratio of one to thirty;

(c) When handwashing sinks and bathing facilities are not provided in individual dwelling units the following ratios apply:

(i) Handwashing sinks must be provided on a ratio of one to every six; and

(ii) Bathing facilities must be provided on a ratio of one to every ten.

(3) Water and septic systems must be approved by the jurisdiction having authority, including installation or modification.

[Statutory Authority: RCW 70.114A.081. 99-03-065, § 246-359-560, filed 1/18/99, effective 2/18/99.]

WAC 246-359-565 Cooking facilities. (1) **Individual dwelling units.** Cooking facilities in individual dwelling units must be sufficient to meet the requirements of WAC 246-358-125, temporary worker housing cooking and foodhandling facilities;

(2) **Common use cooking facilities.** Cooking facilities separate from sleeping units and used by multiple individuals or families must:

(a) Meet the requirements of WAC 246-358-125, temporary worker housing cooking and foodhandling facilities;

(b) Comply with WAC 296-307-160, WISHA;

(c) Be located within one hundred feet of the dormitory structure; and

(d) Have mechanical ventilation installed with a one hundred cubic feet per minute (CFM) intermittent fan or a twenty-five CFM continual fan, vented to the outside for each cooking unit.

(3) **Dining halls with cooking facilities.** Cooking facilities which are to be provided by the licensed operator for temporary workers residing in the temporary worker housing must comply with:

(a) WAC 246-358-125(3), dining hall rules for temporary worker housing;

(b) WAC 296-307-160; and

(c) Chapter 246-215 WAC, food service sanitation rules.

[Statutory Authority: RCW 70.114A.081. 99-03-065, § 246-359-565, filed 1/18/99, effective 2/18/99.]

WAC 246-359-570 Mechanical installations. The installation of heating, ventilating, cooling, refrigeration systems, and other miscellaneous heat producing equipment must meet the requirements of the uniform mechanical code as adopted by the state building code council, chapter 51-42 WAC, except as exempted in WAC 246-359-575.

[Statutory Authority: RCW 70.114A.081. 99-03-065, § 246-359-570, filed 1/18/99, effective 2/18/99.]

WAC 246-359-575 Energy and ventilation and indoor air quality requirement exemptions. Temporary worker housing as defined in this chapter are exempt from all versions of the Washington state energy code and the ventilation and indoor air quality code.

[Statutory Authority: RCW 70.114A.081. 99-03-065, § 246-359-575, filed 1/18/99, effective 2/18/99.]

WAC 246-359-580 Heating and insulation. (1) When the temporary worker housing is occupied from October 1st through May 1st:

(a) Department approved heat producing equipment must:

(i) Be available or installed; and

(ii) Comply with WISHA and chapter 246-358 WAC.

(b) A minimum of R-11 insulating material must be used to insulate ceilings and exterior walls.

(2) When insulation is used it must be covered with material which is safe and sturdy and sufficient to protect the building occupants from the insulating material.

[Statutory Authority: RCW 70.114A.081. 99-03-065, § 246-359-580, filed 1/18/99, effective 2/18/99.]

WAC 246-359-590 Liquid petroleum gas (LP-gas) storage tanks. Installed LP-gas, such as propane, propylene, butane, normal butane or isobutane, and butylenes, must comply with uniform fire code article 82 and uniform fire code standard 82-1.

[Statutory Authority: RCW 70.114A.081. 99-03-065, § 246-359-590, filed 1/18/99, effective 2/18/99.]

WAC 246-359-600 Alternate construction. (1) The department will allow alternate construction to the requirements stated in WAC 246-359-200 through 246-359-440 of this chapter when the plans are designed and stamped by an engineer or architect licensed to practice in the state of Washington.

(2) Any changes in the structural design must be stamped by an engineer including:

(a) Fixed construction, which cannot be dismantled and stored. Such fixed construction must comply with the structural requirements of the state building code, for example, wind forces, seismic forces, snow load, live load, and dead load.

(b) Nonfixed construction which can be dismantled and stored for use when ice or snow exceed the snow loads stated in this chapter. Such nonfixed construction must comply with the structural requirements of the state building code, for example, wind forces, seismic forces, live load, and dead load with the exception of snow loads.

(3) To determine compliance with this section the department may require a special inspector to conduct special inspections.

[Statutory Authority: RCW 70.114A.081. 99-03-065, § 246-359-600, filed 1/18/99, effective 2/18/99.]

WAC 246-359-700 Approval of factory assembled structures (FAS). No FAS will be approved unless the FAS has an insignia of approval installed by the manufacturer. Alterations to manufactured housing and mobile homes must be approved by the Washington state department of labor and industries.

[Statutory Authority: RCW 70.114A.081. 99-03-065, § 246-359-700, filed 1/18/99, effective 2/18/99.]

WAC 246-359-710 Installation of factory assembled structures (FAS)—Except for manufactured homes. The department will approve the installation of all FAS except for manufactured homes (see WAC 246-359-720) when the following requirements are met:

(1) New and relocated FAS must be installed according to the manufacturer's written instructions;

(2) If the manufacturer's written instructions are unavailable or insufficient to address safe installation the department will require installation instructions for FAS to be submitted by an engineer or architect;

(3) The department will inspect FAS installation to determine if the site is properly prepared and the FAS is anchored according to the:

(a) Manufacturer's installation instructions; or

(b) Design of either an engineer or an architect.

(4) The requirements stated in WAC 246-359-720 (5) through (8) apply to FAS installation.

[Statutory Authority: RCW 70.114A.081. 99-03-065, § 246-359-710, filed 1/18/99, effective 2/18/99.]

WAC 246-359-720 Installation requirements for manufactured homes. The department will use the following criteria for approving the installation of manufactured homes:

(1) New and relocated manufactured homes must be installed according to the manufacturer's written installation instructions;

(2) If the manufacturer's installation instructions are unavailable for manufactured homes, the department will accept the following:

(a) American National Standards Institute (ANSI) A225.1, 1994 edition, section 3; or

(b) The installation instructions of an engineer or architect licensed in Washington.

(3) The department will inspect the installation to determine if the manufactured home is placed on a properly prepared site and anchored according to the:

(a) Manufacturer's installation instructions;

(b) ANSI A225.1, 1994 edition, section 3; or

(c) Design of an engineer or architect licensed in Washington.

(4) The department will require, at a minimum, specific instructions be obtained from a licensed engineer or architect when a manufactured home is to be installed on a site where the specific soil bearing capacity is not addressed in the manufacturer's instructions.

(5) The department may review, at a minimum, the following installation requirements:

(a) Heat duct crossovers, except that heat duct crossovers supported above the ground by strapping or blocking to avoid standing water and to prevent compression and sharp bends to minimize stress at the connections are also accepted;

(b) Dryer vents exhausted to the exterior side of the wall or skirting, when installed; and

(c) Hot water tank pressure relief lines. These lines must be exhausted to the exterior side of the exterior wall or skirting and downward.

(6) Water lines, waste lines, gas lines and electrical systems must be installed according to the requirements of this chapter.

(7) When skirting is used the skirting must:

(a) Be made of a material suitable for ground contact including all metal fasteners which must be made of galvanized, stainless steel or other corrosion resistant material;

(b) Be recessed behind the siding or trim and attached in such a manner to prevent water from being trapped between the skirting and siding or trim; and

(c) Have vent openings located close to corners which:

(i) Provide cross-ventilation on at least two opposite sides;

(ii) Are designed to prevent the entrance of rodents by covering the vent openings with corrosion-resistant wire mesh with mesh opening of one-fourth inch in dimension; and

(iii) Have a net area of not less than one square foot for each one hundred fifty square feet of under floor area.

(8) Provide access to the under floor area of the manufactured home so that all areas under the home are available for inspection. The opening must not be less than eighteen inches by twenty-four inches. The cover must be of metal, pressure treated wood or vinyl.

[Statutory Authority: RCW 70.114A.081. 99-03-065, § 246-359-720, filed 1/18/99, effective 2/18/99.]

WAC 246-359-730 Manufactured home installers. A manufactured home may be installed by:

(1) The applicant;

(2) A certified installer as required by WAC 296-150M-0630;

(3) An individual supervised by an on-site certified installer; or

(4) A specialty trades person, for certain aspects of installation.

[Statutory Authority: RCW 70.114A.081. 99-03-065, § 246-359-730, filed 1/18/99, effective 2/18/99.]

WAC 246-359-740 Drain connector to factory assembled structures (FAS). (1) A FAS containing plumbing fixtures must be connected to the drain inlet by a drain connector:

(a) Approved by the department;

(b) Consisting of pipe not less than Schedule 40 with appropriate fittings and connectors; and

(c) Not less in size than the FAS outlet.

(2) The fitting connected to the drain inlet must be a directional fitting to discharge the flow into the drain inlet.

(3) A drain connector must be:

(a) Installed and maintained with a grade not less than one-fourth inch per foot;

(b) Gas-tight and no longer than necessary to make the direct connection between the mobile home outlet and drain inlet at the site.

(4) Each drain inlet must be maintained gas-tight when not in use.

[Statutory Authority: RCW 70.114A.081. 99-03-065, § 246-359-740, filed 1/18/99, effective 2/18/99.]

WAC 246-359-750 Water connector to factory assembled structures (FAS). (1) A FAS with plumbing fixtures must be connected to the approved water service outlet by a flexible connector, such as copper tubing or other approved material, not less than three-fourths inch interior diameter.

(2) A separate water service shutoff valve installed on the supply side at or near the water service outlet for each FAS.

[Statutory Authority: RCW 70.114A.081. 99-03-065, § 246-359-750, filed 1/18/99, effective 2/18/99.]

WAC 246-359-760 Gas connections to factory assembled structures (FAS). (1) A FAS, when using gas for heating or cooking purposes, must be connected to the gas outlet by an approved mobile or manufactured home connector. Gas connectors must be of adequate size to supply the total demand of the connected FAS and have a maximum length of six feet.

(2) A shutoff valve controlling the flow of gas to the entire gas piping system must be:

(a) Installed for each FAS;

(b) Readily accessible;

(c) Identified as the "shutoff valve"; and

(d) Installed near the point of connection to the service piping or supply connection of the liquified petroleum gas (LP-gas) tank.

(3) The installation and size of each section of LP-gas piping is determined by the uniform mechanical code.

[Statutory Authority: RCW 70.114A.081. 99-03-065, § 246-359-760, filed 1/18/99, effective 2/18/99.]

WAC 246-359-800 WISHA requirements affecting building temporary worker housing. (1) A separate sleeping area must be provided for the husband and wife in all family units in which one or more children over six years of age are housed.

(2) If a camp is used during cold weather, adequate heating equipment must be provided.

Note: All heating, cooking, and water heating equipment must be installed according to state and local ordinances and codes regulating installations.

[Statutory Authority: RCW 70.114A.081. 99-03-065, § 246-359-800, filed 1/18/99, effective 2/18/99.]

WAC 246-359-990 Fees. (1) **General fee information.**

(a) The plan review fee and permit or inspection fees for:

(i) Wood framed construction and concrete masonry units will be charged based on square footage and the time required to complete the work, according to Table I, Parts A through C;

(ii) The installation of factory assembled structures will be based on Table I, Part D; and

(b) Each fee must be received before the department will:

(i) Conduct plan review of construction or installation documents;

(ii) Issue a construction permit; or

(iii) Conduct any on-site inspection.

(2) **Plan review fee for construction and installation documents.** The plan review fee is:

(a) A separate and additional fee from the construction permit fees or inspection fees;

(b) Based on the initial plan review and assumes all documents required by WAC 246-359-070, application process and WAC 246-359-080, required documents for plan review, have been submitted.

(c) An additional plan review fee will be charged as stated in Table I, Part E when:

(i) The documents submitted are incomplete;

(ii) Plans previously reviewed and approved have been changed;

(iii) The department has determined, by inspection, that the approved plans were not followed during construction.

(3) **Variance requests.** Written variance requests must be accompanied by a fee as stated in Table I, Part E.

(4) **Construction permit fee, includes required inspections.** The construction permit fee:

(a) Is a separate and additional fee from the plan review fee;

(b) Includes the required inspections as stated in WAC 246-359-120 (1) through (4);

(c) Is based on the time required to conduct an inspection and assumes all of the requirements for application and plan review as required by subsection (2) of this section have been met and the plans are approved.

(5) **Additional inspections.** When the department determines additional inspections are necessary to determine compliance with this chapter the additional inspection fee will be charged according to Table I, Part F.

(6) **Investigation inspections.** If the department finds a person has initiated building or work without a permit, a fee will be charged according to Table I, Part F for the time taken to investigate.

(7) **Special inspections.** When an applicant is building to alternate construction standards and the required inspections in this chapter are not deemed sufficient by the department to determine compliance with this chapter special inspections may be required. The applicant must pay the full cost of the special inspections. The department will notify the applicant what is required and the reasons for requiring a special inspection.

(8) The department will provide on-site technical assistance at the applicant's request. A fee will be charged according to Table I, Part G.

Table I, Fee Table

Square footage of project review		Construction plan review fee	Construction permit or inspection fee
Part A.	Up to 1000 square feet	$330	$550
Part B.	For each additional 100 square feet feet or fraction thereof	$ 15	$ 30
Part C.	Preapproved plans For each additional 100 square feet feet or fraction thereof	$ 66 $ 3	$550 $ 30
Part D.	Factory Assembled Structures, for example, manufactured homes, park trailers, modular buildings	$ 66 $ 3	$550 $ 30
Part E.	Additional plan reviews, conducted after initial approval; and Variance requests	$47 per hour (two hour minimum)	
Part F.	Additional and investigation inspections	$47 per hour (two hour minimum)	
Part G.	On-site technical assistance visits	$47 per hour (two hour minimum)	

[Statutory Authority: RCW 70.114A.081. 99-03-065, § 246-359-990, filed 1/18/99, effective 2/18/99.]

Chapter 246-360 WAC
TRANSIENT ACCOMMODATIONS

WAC

246-360-001	Purpose.
246-360-010	Definitions.
246-360-020	Licensure.
246-360-030	Responsibilities and rights—Licensee.
246-360-035	Authority of the department.
246-360-040	Water supply and temperature control.
246-360-050	Sewage and liquid waste disposal.
246-360-070	Refuse and vectors.
246-360-080	Construction and maintenance.
246-360-090	Lodging units.
246-360-100	Bathrooms, water closets, and handwashing sinks.
246-360-110	Lodging unit kitchens.
246-360-120	Heating and cooling.
246-360-130	Lighting.
246-360-140	Ventilation.
246-360-150	Beds and bedding.
246-360-160	Food and beverage services.
246-360-180	Laundry.
246-360-200	Safety, chemical, and physical hazards.
246-360-220	Fire safety.
246-360-230	Rustic resorts.
246-360-500	Exemptions.
246-360-990	Fees.

DISPOSITION OF SECTIONS FORMERLY CODIFIED IN THIS CHAPTER

246-360-060	Swimming pools, spas, hot tubs, wading pools, bathing beaches. [Statutory Authority: RCW 70.62.240. 94-23-077, § 246-360-060, filed 11/16/94, effective 12/17/94. Statutory Authority: RCW 43.20.050. 91-02-051 (Order 124B), recodified as § 246-360-060, filed 12/27/90, effective 1/31/91; 89-11-058 (Order 328), § 248-144-071, filed 5/17/89.] Repealed by 97-20-100, filed 9/29/97, effective 10/30/97. Statutory Authority: RCW 43.20.050.
246-360-170	Travel trailers and mobile homes. [Statutory Authority: RCW 70.62.240. 94-23-077, § 246-360-170, filed 11/16/94, effective 12/17/94. Statutory Authority: RCW 43.20.050. 91-02-051 (Order 124B), recodified as § 246-360-170, filed 12/27/90, effective 1/31/91; 89-11-058 (Order 328), § 248-144-181, filed 5/17/89.] Repealed by 97-20-100, filed 9/29/97, effective 10/30/97. Statutory Authority: RCW 43.20.050.
246-360-190	Housekeeping equipment and procedures. [Statutory Authority: RCW 43.20.050. 91-02-051 (Order 124B), recodified as § 246-360-190, filed 12/27/90, effective 1/31/91; 89-11-058 (Order 328), § 248-144-201, filed 5/17/89.] Repealed by 94-23-077, filed 11/16/94, effective 12/17/94. Statutory Authority: RCW 70.62.240.
246-360-210	Separability. [Statutory Authority: RCW 43.20.050. 91-02-051 (Order 124B), recodified as § 246-360-210, filed 12/27/90, effective 1/31/91; Order 71, § 248-144-250, filed 4/11/72.] Repealed by 97-20-100, filed 9/29/97, effective 10/30/97. Statutory Authority: RCW 43.20.050.

WAC 246-360-001 Purpose. (1) This chapter outlines the minimum public health and safety standards for the licensure and operations of transient accommodations in Washington state.

(2) This chapter applies to facilities offering three or more lodging units to guests for periods of less than thirty days. These facilities include, but are not limited to:

(a) Hotels;

(b) Motels;

(c) Bed and breakfast establishments;

(d) Resorts;

(e) Rustic resorts;

(f) Inns;

(g) Condominiums;

(h) Apartments;

(i) Crisis shelters;

(j) Hostels; and

(k) Retreats.

(3) RCW 70.62.240 requires the board to adopt rules to assure transient accommodations are operated and maintained in a manner consistent with the public's health and safety. RCW 43.70.110 requires the secretary to charge fees for licensure and RCW 43.70.250 requires the cost of business licensing programs to be fully borne by the licensees.

[Statutory Authority: Chapter 70.62 RCW. 04-24-002, § 246-360-001, filed 11/18/04, effective 4/1/05. Statutory Authority: RCW 70.62.240. 94-23-077, § 246-360-001, filed 11/16/94, effective 12/17/94; 92-02-019 (Order 225B), § 246-360-001, filed 12/23/91, effective 1/23/92. Statutory Authority: RCW 43.20.050. 91-02-051 (Order 124B), recodified as § 246-360-001, filed 12/27/90, effective 1/31/91; 89-11-058 (Order 328), § 248-144-010, filed 5/17/89; Order 71, § 248-144-010, filed 4/11/72.]

WAC 246-360-010 Definitions. For the purpose of this chapter, the following words and phrases have the following meanings unless the context clearly indicates otherwise.

(1) "Approved" means a written statement of acceptability issued by a governmental agency or meeting nationally recognized testing standards.

(2) "Bathroom" means a room containing a bathing fixture.

(3) "Bed and breakfast" means a private home or inn offering lodging on a temporary basis to travelers. This type of facility may include food service in accordance with chapter 246-215 WAC.

(4) "Board" means the Washington state board of health established under chapter 43.20 RCW.

(5) "Clean" means without visible or tangible soil or residue.

(6) "Cleanable" means the material and finish is fabricated to permit complete removal of residue through normal cleaning methods.

(7) "Construction" means:

(a) A new building intended for use as a transient accommodation or part of a transient accommodation;

(b) An addition, modification or alteration that changes the functional use of an existing transient accommodation or portion of a transient accommodation;

(c) An existing building or portion thereof to be converted for use as a transient accommodation; or

(d) A modification requiring a building permit by a local authority having responsibility for enforcing state and local building codes or local ordinances.

(8) "Crisis shelter" means a transient accommodation, at a permanent physical location, providing emergency or planned lodging services to a specific population, for periods of less than thirty days. A crisis shelter may or may not be reimbursed for services in the form of rental fee or labor.

(9) "Department" means the Washington state department of health.

(10) "Dormitory" means a lodging unit containing beds, cots, pads, or other furnishings intended for sleeping by a number of guests.

(11) "Exemption" means a written authorization granted by the department under WAC 246-360-500.

(12) "Guest" means any individual occupying, or registered to occupy, a lodging unit.

(13) "Hostel" means a transient accommodation offering lodging and limited services, that may include the use of a common kitchen, to guests on a daily or weekly basis in exchange for a rental fee, labor, or a combination of rental fee and labor.

(14) "Laundry" means a central area or room with equipment intended to be used to clean and dry bedding, linen, towels, and other items, including such areas or rooms provided for guests' use.

(15) "Licensee" means the person to whom the department issues the transient accommodation license.

(16) "Local health jurisdiction" means the county or district that provides public health services within the area consistent with chapters 70.05 and 70.08 RCW.

(17) "Lodging unit" means an individual room or group of interconnected rooms, intended for sleeping, that are for rent or use by a guest, and is individually designated by number, letter, or other means of identification. A lodging unit may or may not include areas for cooking and eating.

(18) "Person" means any individual, firm, partnership, corporation, company, association, organization, or joint stock association, and the legal successor thereof.

(19) "Retreat" means a transient accommodation intended to provide seclusion, meditation, contemplation, religious activities, training, or similar activities.

(20) "Rustic resort" means a rural transient accommodation lacking many modern conveniences. A rustic resort may operate seasonally.

(21) "Sanitary" means hygienic conditions that are conducive to good health.

(22) "Sanitize" means to treat a surface or object with a chemical or physical process, such as heat, to control or limit the presence of germs. For purposes of these regulations, "sanitize" and "disinfect" are equivalent.

(23) "Self-inspect" means the licensee evaluates a transient accommodation for compliance with specific requirements in this chapter.

(24) "Sink" means a properly trapped plumbing fixture, capable of holding water, with approved potable running hot and cold water under pressure.

(25) "State building code" means chapter 19.27 RCW and any codes adopted and any rules and regulations promulgated under chapter 19.27 RCW.

(26) "Survey" means the examination or inspection of a transient accommodation, conducted by the department to determine if minimal health and safety standards in chapter 246-360 WAC are being met. A survey may require one or more site visits and may be announced or unannounced. For purposes of these regulations, a survey and inspection are equivalent.

(27) "Surveyor" means a department employee who conducts a health and safety survey of transient accommodations. For purposes of these regulations, the terms surveyor and inspector are equivalent.

(28) "Transient accommodation" means any facility such as a hotel, motel, condominium, resort, or any other facility or place offering three or more lodging units to guests for periods of less than thirty days and may include food service operations in accordance with chapter 246-215 WAC.

(29) "Utensil" means any food contact implement used in storing, preparing, transporting, dispensing, serving, or selling food or drink, excluding commercial vending and storage equipment.

(30) "Vector" means an animal that transmits a disease-producing organism from one host to another. For example, mosquitoes are vectors that transmit malaria.

(31) "Water closet" means a portable device or a fixture that has a hinged seat and flushing device used to dispose of body waste. This may include water filled, chemical or incineration toilets.

[Statutory Authority: Chapter 70.62 RCW. 04-24-002, § 246-360-010, filed 11/18/04, effective 4/1/05. Statutory Authority: RCW 70.62.240. 94-23-077, § 246-360-010, filed 11/16/94, effective 12/17/94; 92-02-019 (Order 225B), § 246-360-010, filed 12/23/91, effective 1/23/92. Statutory Authority: RCW 43.20.050. 91-02-051 (Order 124B), recodified as § 246-360-010, filed 12/27/90, effective 1/31/91; 89-11-058 (Order 328), § 248-144-020, filed 5/17/89; Order 71, § 248-144-020, filed 4/11/72.]

WAC 246-360-020 Licensure. (1) A person must have a current license issued by the department before operating or advertising a transient accommodation. A license is effective for one year from date of issuance.

(2) An applicant for initial licensure must submit to the department, sixty days or more before commencing business, an application which shall include the following:

(a) A completed application on a form provided by the department;

(b) A completed self-inspection on a form provided by the department;

(c) The fee specified in WAC 246-360-990;

(d) A completed uniform business identifier number form provided by the department; and

(e) Other information as required by the department.

(3) A licensee must apply for license renewal annually on or before the expiration date of the current license by submitting to the department, by mail postmarked no later than midnight on the license expiration date, or by presenting to the department personally or electronically no later than 5:00 p.m. on the expiration date, a renewal application which shall include the following:

(a) A completed application on a form provided by the department;

(b) A completed self-inspection on a form provided by the department;

(c) The fee specified in WAC 246-360-990;

(d) A completed uniform business identifier number form, provided by the department; and

(e) Other information as required by the department.

(4) An applicant must pass, to the satisfaction of the department, an on-site survey prior to the department issuing an initial license or reinstating an invalid license.

(5) If the licensee fails to submit a complete renewal application meeting the requirements of subsection (3) of this section by the license expiration date, the license shall become invalid on the thirty-fifth day after the license expiration date unless:

(a) All deficiencies in the renewal have been corrected; and

(b) The applicable penalty or late fee as specified in WAC 246-360-990 has been received by the department, in each case prior to the thirty-fifth day following the expiration date. In the event the license becomes invalid, the transient accommodation is no longer authorized to operate.

(6) An invalid license may be reinstated upon reapplication for a license under subsections (2) and (4) of this section.

(7) At least fifteen days prior to a transfer of ownership or change in the Uniform Business Identifier number of a transient accommodation the current licensee must submit to the department:

(a) The full name and address of the current licensee and prospective licensee;

(b) The name and address of the currently licensed transient accommodation, and the name under which the transferred transient accommodation will operate;

(c) The date of the proposed change; and

(d) Other information as required by the department.

(8) At least fifteen days prior to a transfer of ownership or a change in the Uniform Business Identifier number of a transient accommodation, the prospective new licensee must apply for licensure by submitting to the department:

(a) A completed application on a form provided by the department;

(b) A completed self-inspection on a form provided by the department;

(c) The fee specified in WAC 246-360-990;

(d) A completed Uniform Business Identifier Number Form provided by the department; and

(e) Other information as required by the department.

(9) A licensee must notify the department when changing the number of lodging units or the name of the transient accommodation by submitting:

(a) A letter describing the intended change;

(b) The fee specified in WAC 246-360-990 for an amended license; and

(c) Other information as required by the department.

(10) The licensee must notify the department prior to construction as defined in WAC 246-360-010(8) by submitting:

(a) A description of the construction;

(b) A description of how the construction will be used;

(c) A description of any changes in the functional use of existing construction;

(d) Documentation of approvals issued by local authorities having jurisdiction; and

(e) Other information as required by the department.

[Statutory Authority: Chapter 70.62 RCW. 04-24-002, § 246-360-020, filed 11/18/04, effective 4/1/05. Statutory Authority: RCW 70.62.240. 94-23-077, § 246-360-020, filed 11/16/94, effective 12/17/94; 92-02-019 (Order 225B), § 246-360-020, filed 12/23/91, effective 1/23/92. Statutory Authority: RCW 43.20.050. 91-02-051 (Order 124B), recodified as § 246-360-020, filed 12/27/90, effective 1/31/91. Statutory Authority: Chapter 34.05 RCW and RCW 42.20.050. 90-06-049 (Order 040), § 248-144-031, filed 3/2/90, effective 3/2/90. Statutory Authority: RCW 43.20.050. 89-11-058 (Order 328), § 248-144-031, filed 5/17/89.]

WAC 246-360-030 Responsibilities and rights—Licensee. (1) The licensee must:

(a) Comply with the provisions of chapter 70.62 RCW, other applicable state and local agency regulations and this chapter;

(b) Conspicuously display the license in the lobby or office of the transient accommodation for which it is issued;

(c) Conduct self-inspections as directed by the department;

(d) Submit a response to a statement of deficiencies to the department by the date specified. For the purposes of this section, a statement of deficiencies means a written notice of any violation of chapter 70.62 RCW or the rules adopted thereunder, that describes the reasons for noncompliance. Responses shall include:

(i) A written plan of correction for each deficiency stated in the report. For the purposes of this section, a plan of correction is a proposal devised by the licensee or applicant that includes specific actions that must be taken and a time frame to accomplish them. The plan of correction must meet the approval of the department. Implementation is required unless modification is agreed to by the department and is subject to verification by the department; and/or

(ii) A progress report of corrections, if required by the department. For the purposes of this section, a progress report means a document prepared by the licensee outlining the completion or ongoing status of efforts to correct deficiencies or violations cited in a survey. The licensee must send the progress report to the department as directed by the statement of deficiencies.

(e) Comply with a compliance schedule if the department issues one. For the purposes of this section, a compliance schedule means a document listing violations and a time schedule for the licensee to follow in correcting violations. This schedule may be called a directed plan of correction (DPOC);

(f) Adequately supervise employees and transient accommodation premises to ensure the transient accommodation is:

(i) Clean, safe, and sanitary; and

(ii) In good repair;

(g) Establish policies and procedures requiring employees to maintain good personal hygiene;

(h) Consult with the department or local health department on any suspected imminent health hazard;

(i) Effective October 1, 2005, have a written basic emergency preparedness plan in the event of fire, power failure, transient accommodation problem, or natural or other disasters. Emergency response training must be conducted and documented annually or more often as needed.

(2) The licensee shall fully cooperate with the department in, and shall in no way impede, its administration and enforcement of the provisions of chapter 70.62 RCW and this chapter.

(3) An applicant or licensee may contest a department decision or action according to the provisions of RCW 43.70.115, chapter 34.05 RCW, and chapter 246-10 WAC.

[Statutory Authority: Chapter 70.62 RCW. 04-24-002, § 246-360-030, filed 11/18/04, effective 4/1/05. Statutory Authority: RCW 70.62.240. 94-23-077, § 246-360-030, filed 11/16/94, effective 12/17/94. Statutory Authority: RCW 43.20.050. 91-02-051 (Order 124B), recodified as § 246-360-030, filed 12/27/90, effective 1/31/91; 89-11-058 (Order 328), § 248-144-041, filed 5/17/89.]

WAC 246-360-035 Authority of the department. (1) The department shall:

(a) Conduct an on-site survey prior to issuing an initial transient accommodation license or reinstating an invalid license;

(b) Conduct announced or unannounced on-site surveys during routine business hours and conduct complaint investigations at any time of its choosing to determine compliance with chapter 70.62 RCW and this chapter;

(c) Issue or renew a license when the applicant or licensee and the transient accommodation meet the requirements in chapter 70.62 RCW and this chapter;

(d) Allow self-inspections to encourage compliance with chapter 70.62 RCW and this chapter;

(e) Comply with RCW 43.70.115, chapter 34.05 RCW, and chapter 246-10 WAC when denying, suspending, modifying, or revoking a transient accommodation license; and

(f) Comply with RCW 43.70.095 when assessing civil fines.

(2) The department may deny, suspend, or revoke a transient accommodation license if the department finds the applicant, licensee, its agents, officers, directors, or any person with any interest therein:

(a) Knowingly or with reason to know, makes a misrepresentation of, false statement of, or fails to disclose, a material fact to the department:

(i) In an application for licensure or renewal of licensure;

(ii) In any matter under department investigation, including in any plan of correction or other document required to be provided to the department;

(iii) During an on-site survey; or

(iv) In a self-inspection;

(b) Obtains or attempts to obtain a license by fraudulent means or misrepresentation;

(c) Fails or refuses to comply with the requirements of chapter 70.62 RCW or this chapter;

(d) Knowingly, or with reason to know, compromises the health or safety of a guest;

(e) Fails to pay a fine within thirty days after the assessment becomes final or as agreed to by the department and the licensee; or

(f) Operates with a suspended or revoked license.

(3) In addition to any other rights allowed under applicable law, the department may address violations by an applicant or a licensee of chapter 70.62 RCW or this chapter by:

(a) A plan of correction may be offered if the department determines that identified deficiencies are not major, broadly systemic, or of a recurring nature. Under this chapter, a "plan of correction" is a proposal devised by the applicant or licensee that includes specific corrective actions that must be taken to correct identified deficiencies and a time frame in which to complete them. The plan of correction must be approved. Implementation is required within the approved time frame, and is subject to verification by the department;

(b) A directed plan of correction may be offered if the department determines that identified deficiencies are broadly systemic, recurring, or of a significant threat to public health and safety. Under this chapter, a "directed plan of correction" is a plan of correction based on a statement of deficiencies, and includes specific corrective actions that must be taken and a time frame in which to complete them. Under this chapter, a "statement of deficiencies" is a survey or investigation report completed by the department identifying one or more deficiencies. The final content of the directed plan of correction will be reached during meetings between the department and the licensee, following an initial statement of general requirements by the department. Timelines will be reduced to the minimum necessary, even prior to formalization of the directed plan of correction, to redress problems; and/or

(c) Initiating administrative action, under chapter 34.05 RCW, RCW 43.70.115 and chapter 246-10 WAC, either as the department's primary alternative, or in the event the department requires corrective action under (a) or (b) of this subsection, and the applicant or licensee fails to correct identified deficiencies to the department's satisfaction within the approved time frame.

(4) In lieu of or in addition to license suspension or revocation, the department may assess a civil fine in accordance with RCW 43.70.095.

(5) The department may summarily suspend a license if the department determines a deficiency is an imminent threat to public health, safety or welfare.

[Statutory Authority: Chapter 70.62 RCW. 04-24-002, § 246-360-035, filed 11/18/04, effective 4/1/05.]

WAC 246-360-040 Water supply and temperature control. The licensee must:

(1) Ensure that the water supply is from an approved source as specified in chapter 246-290 or 246-291 WAC;

(2) Ensure that the plumbing inside the transient accommodation that provides potable water is free of any actual or potential cross connections with any systems that could be a source of nonpotable liquid, solid, or gas that could contaminate the potable water supply by backflow;

(3) Provide hot and cold water under adequate pressure accessible to guests at all times when the lodging unit is rented;

(4) Provide sinks and bathing fixtures used by guests with hot water at 110 degrees plus or minus 10 degrees Fahrenheit accessible at all times when the lodging unit is rented; and

(5) Label nonpotable water supplies at all accessible connections and valves "unsafe for drinking or other domestic use."

[Statutory Authority: Chapter 70.62 RCW. 04-24-002, § 246-360-040, filed 11/18/04, effective 4/1/05. Statutory Authority: RCW 70.62.240. 94-23-077, § 246-360-040, filed 11/16/94, effective 12/17/94; 92-02-019 (Order 225B), § 246-360-040, filed 12/23/91, effective 1/23/92. Statutory Authority: RCW 43.20.050. 91-02-051 (Order 124B), recodified as § 246-360-040, filed 12/27/90, effective 1/31/91; 89-11-058 (Order 328), § 248-144-051, filed 5/17/89.]

WAC 246-360-050 Sewage and liquid waste disposal. The licensee must provide documentation that demonstrates that sewage and liquid waste drain into:

(1) A municipal sewage system if available; or

(2) A sewage disposal system designed, constructed, and maintained in accordance with chapters 246-272, 246-272B, and 173-240 WAC and local ordinances.

[Statutory Authority: Chapter 70.62 RCW. 04-24-002, § 246-360-050, filed 11/18/04, effective 4/1/05. Statutory Authority: RCW 70.62.240. 94-23-077, § 246-360-050, filed 11/16/94, effective 12/17/94; 92-02-019 (Order 225B), § 246-360-050, filed 12/23/91, effective 1/23/92. Statutory Authority: RCW 43.20.050. 91-02-051 (Order 124B), recodified as § 246-360-050, filed 12/27/90, effective 1/31/91; 89-11-058 (Order 328), § 248-144-061, filed 5/17/89.]

WAC 246-360-070 Refuse and vectors. The licensee must:

(1) Provide in each lodging unit one or more washable, leak-proof refuse containers of adequate size, kept in sanitary condition, or an equivalent container(s) with a leak-proof disposable liner;

(2) Collect refuse as necessary to maintain a clean, and sanitary environment in and around the transient accommodation;

(3) Collect refuse from lodging units:

(a) After each guest occupancy; and

(b) At least every three days or more often as necessary to maintain a clean and sanitary environment in each guest's room;

(4) Handle refuse in a safe, clean and sanitary manner;

(5) Store outside refuse in washable, leak-proof, and closed covered containers, bins or dumpsters until removed for disposal, no less often than every two weeks;

(6) Remove and dispose of refuse in a manner consistent with state and local sanitation codes and ordinances; and

(7) Take measures to control vectors including insects, rodents and other pests, in and around the transient accommodation.

[Statutory Authority: Chapter 70.62 RCW. 04-24-002, § 246-360-070, filed 11/18/04, effective 4/1/05. Statutory Authority: RCW 70.62.240. 94-23-077, § 246-360-070, filed 11/16/94, effective 12/17/94. Statutory Authority: RCW 43.20.050. 91-02-051 (Order 124B), recodified as § 246-360-070, filed 12/27/90, effective 1/31/91; 89-11-058 (Order 328), § 248-144-081, filed 5/17/89.]

WAC 246-360-080 Construction and maintenance. The licensee must:

(1) Ensure all transient accommodations, including any construction, buildings, facilities, fixtures, furnishings and surroundings meet the requirements of:

(a) Chapter 70.62 RCW and this chapter;

(b) The state building code;

(c) All other applicable municipal and county codes and ordinances.

(2) Provide documentation of compliance with WAC 246-360-080 (1)(b) and (c) under the following conditions:

(a) For construction that is on-going or has been completed since the last survey; or

(b) For existing buildings, facilities and conditions that appear to pose an imminent hazard to life or property.

(3) Ensure that all buildings, facilities, fixtures, common areas such as exercise rooms, public bathrooms, kitchens, utility sinks and guest laundry rooms and furnishings are structurally sound, safe, clean, cleanable, sanitary, and in good repair.

[Statutory Authority: Chapter 70.62 RCW. 04-24-002, § 246-360-080, filed 11/18/04, effective 4/1/05. Statutory Authority: RCW 70.62.240. 94-23-077, § 246-360-080, filed 11/16/94, effective 12/17/94. Statutory Authority: RCW 43.20.050. 91-02-051 (Order 124B), recodified as § 246-360-080, filed 12/27/90, effective 1/31/91; 89-11-058 (Order 328), § 248-144-091, filed 5/17/89.]

WAC 246-360-090 Lodging units. The licensee must provide lodging units with:

(1) An occupancy level not to exceed the number of persons accommodated by the beds present, based on their intended maximum usage; and

(2) Adequate space to provide a clear path of egress from each bed, including any cot, crib, mat or mattress, to the exit of the sleeping room or unit in case of fire:

(a) An aisle at least thirty-six inches wide from one side of each bed that is part of the regular furnishings of the unit;

(b) An aisle at least eighteen inches wide from one side of each temporary bed, other than an infant's crib, that is no more than thirty-eight inches high, provided that the placement of the temporary bed does not obstruct the egress aisles required for other beds;

(c) An aisle at least twenty-eight inches wide from one side of each temporary infant's crib and each temporary bed above a height of thirty-eight inches, provided that the placement of the temporary bed does not obstruct the egress aisle required for other beds; and

(d) For purposes of this section, a temporary bed is any easily transported bed, cot, crib, mattress, pad or other furnishing intended for sleeping that is provided only at the request of a guest and is removed or stored when the guest departs.

(3) Floors, ceilings, doors, walls, carpet, windowsills, window tracks, electrical switches, locking mechanisms and receptacle plates kept clean, cleanable and in good repair;

(4) Wall and ceiling mounted lighting fixtures firmly secured and in good repair; and

(5) If a phone or other reliable communication device is provided for a lodging unit, it must be capable of allowing immediate communication and connection to police, fire department, paramedic, poison control, hazardous material team or other local emergency responder.

[Statutory Authority: Chapter 70.62 RCW. 04-24-002, § 246-360-090, filed 11/18/04, effective 4/1/05. Statutory Authority: RCW 70.62.240. 94-23-077, § 246-360-090, filed 11/16/94, effective 12/17/94. Statutory Authority: RCW 43.20.050. 91-02-051 (Order 124B), recodified as § 246-360-090, filed 12/27/90, effective 1/31/91; 89-11-058 (Order 328), § 248-144-101, filed 5/17/89.]

WAC 246-360-100 Bathrooms, water closets, and handwashing sinks. The licensee must:

(1) Provide adequate private or common-use bathrooms, water closets, and handwashing sinks to meet the needs of guests;

(2) Provide private and common-use bathrooms, water closets, and handwashing areas with cleanable floors, walls, ceilings, fixtures and furnishings;

(3) Provide an uncarpeted, easily cleanable area around each water closet and adjacent to each bathing fixture;

(4) Maintain safe and properly working fixtures and drains;

(5) Provide slip-resistant surfaces or other devices in bathtubs and/or showers;

(6) Provide a means to maintain privacy for toileting and bathing;

(7) Provide water flush water closets unless the licensee has approval from the department and local health jurisdiction for alternative devices;

(8) Provide a handwashing sink or equivalent within, or adjacent to, each water closet room;

(9) Provide easy access to an acceptable single-use drying device from each common-use handwashing sink;

(10) Provide toilet tissue conveniently located by each toilet;

(11) Provide soap for each handwashing and bathing fixture;

(12) Provide an adequate supply of clean towels, washcloths and floor mats:

(a) For guests upon arrival; and

(b) At least weekly or at the request of the guest;

(13) Assure clean towels, washcloths and floor mats kept in lodging units and common bathrooms are stored in a clean area off the floor; and

(14) For lodging units that do not have water closets, and handwashing sinks, provide common-use bathrooms, water closet rooms and handwashing sinks meeting the requirements of this section in a ratio of one bathing fixture, one water closet and one handwashing sink for each fifteen or fewer guests. A bathing fixture means a shower, bathtub or combination bathtub/shower.

[Statutory Authority: Chapter 70.62 RCW. 04-24-002, § 246-360-100, filed 11/18/04, effective 4/1/05. Statutory Authority: RCW 70.62.240. 94-23-077, § 246-360-100, filed 11/16/94, effective 12/17/94. Statutory Authority: RCW 43.20.050. 91-02-051 (Order 124B), recodified as § 246-360-100, filed 12/27/90, effective 1/31/91; 89-11-058 (Order 328), § 248-144-111, filed 5/17/89.]

WAC 246-360-110 Lodging unit kitchens. (1) A licensee offering kitchens in lodging units must provide each kitchen with:

(a) Cleanable and durable floors and walls in good repair. Effective April 1, 2007, lodging unit kitchens must be uncarpeted and covered with a cleanable floor covering;

(b) Ventilation according to the provisions of WAC 246-360-140;

(c) A sink, other than a "handwashing sink," and defined as a "kitchen sink" that shall be of a sufficient size to accommodate the largest utensil in the lodging unit;

(d) Hot running water according to the provisions of WAC 246-360-040;

(e) A refrigeration device that is:

(i) Capable of maintaining food at a temperature of 45 degrees Fahrenheit or lower; and

(ii) Kept in good repair and in sanitary condition;

(f) Permanently installed cooking equipment meeting nationally recognized testing standards and installed according to local building codes;

(g) A cleanable, nonabsorbent food storage area;

(h) A cleanable table, counter, and chairs, or equivalent; and

(i) A washable, leak-proof waste food container kept in sanitary condition or equivalent container with a disposable leak-proof liner.

(2) The licensee shall clean and sanitize food preparation areas, refrigerator and reusable utensils between each guest occupancy.

(3) A licensee providing utensils shall comply with the provisions of WAC 246-360-160(2).

(4) A licensee shall discard all opened or unused food items left in the units by previous guests.

(5) A licensee offering lodging units that are equipped with only a microwave and mini refrigerator is exempted from this section.

[Statutory Authority: Chapter 70.62 RCW. 04-24-002, § 246-360-110, filed 11/18/04, effective 4/1/05. Statutory Authority: RCW 70.62.240. 94-23-077, § 246-360-110, filed 11/16/94, effective 12/17/94; 92-02-019 (Order 225B), § 246-360-110, filed 12/23/91, effective 1/23/92. Statutory Authority: RCW 43.20.050. 91-02-051 (Order 124B), recodified as § 246-360-110, filed 12/27/90, effective 1/31/91; 89-11-058 (Order 328), § 248-144-121, filed 5/17/89.]

WAC 246-360-120 Heating and cooling. (1) The licensee must provide a safe, adequate means of maintaining an ambient air temperature of at least 65 degrees Fahrenheit in each lodging unit.

(2) A licensee providing a cooling system must keep the system safe, clean, and in good working condition.

(3) All air filters must be cleaned or replaced regularly or as needed.

[Statutory Authority: Chapter 70.62 RCW. 04-24-002, § 246-360-120, filed 11/18/04, effective 4/1/05. Statutory Authority: RCW 70.62.240. 94-23-077, § 246-360-120, filed 11/16/94, effective 12/17/94. Statutory Authority: RCW 43.20.050. 91-02-051 (Order 124B), recodified as § 246-360-120, filed 12/27/90, effective 1/31/91; 89-11-058 (Order 328), § 248-144-131, filed 5/17/89.]

WAC 246-360-130 Lighting. The licensee must:

(1) Maintain light intensities adequate for safety;

(2) Upon request from a guest, provide additional light for tasks or general illumination; and

(3) Provide sufficient emergency lighting for guests to be able to exit the facility safely in the event of a power outage.

[Statutory Authority: Chapter 70.62 RCW. 04-24-002, § 246-360-130, filed 11/18/04, effective 4/1/05. Statutory Authority: RCW 70.62.240. 94-23-077, § 246-360-130, filed 11/16/94, effective 12/17/94. Statutory Authority: RCW 43.20.050. 91-02-051 (Order 124B), recodified as § 246-360-130, filed 12/27/90, effective 1/31/91; 89-11-058 (Order 328), § 248-144-141, filed 5/17/89.]

WAC 246-360-140 Ventilation. (1) The licensee must provide ventilation in all lodging units, kitchen areas, bathrooms, water closet rooms, and laundry rooms.

(2) All areas of the building must be ventilated to minimize odors and moisture. The ventilation system must be in compliance with the Washington Ventilation and Indoor Air Quality Code, chapter 51-13 WAC.

[Statutory Authority: Chapter 70.62 RCW. 04-24-002, § 246-360-140, filed 11/18/04, effective 4/1/05. Statutory Authority: RCW 70.62.240. 94-23-077, § 246-360-140, filed 11/16/94, effective 12/17/94. Statutory Authority: RCW 43.20.050. 91-02-051 (Order 124B), recodified as § 246-360-140, filed 12/27/90, effective 1/31/91; 89-11-058 (Order 328), § 248-144-151, filed 5/17/89.]

WAC 246-360-150 Beds and bedding. A licensee providing beds must:

(1) Provide clean, sanitary mattresses and bedding in good repair;

(2) Maintain durable, clean, and safe beds, cots, bunks, or other furniture for sleeping;

(3) Ensure bunk beds have sufficient unobstructed vertical space so that an adult may sit up comfortably between the bottom and top bunk, or the top bunk and ceiling;

(4) Not provide, or allow the use of, triple bunk beds;

(5) Supply each bed, cot, or bunk with a clean mattress or cushioned pad, top and bottom sheet, mattress pad, pillow, pillowcase, and blankets unless the transient accommodation is a hostel.

(6) Ensure that blankets, bedspreads and mattress pads are cleaned regularly or more often when visibly soiled.

(7) Provide clean replacement pillowcases and sheets:

(a) For guests upon arrival; and

(b) At least weekly when occupied; or

(c) As requested by a guest.

(8) Ensure that bedding kept in the lodging unit is stored in a clean area off the floor.

[Statutory Authority: Chapter 70.62 RCW. 04-24-002, § 246-360-150, filed 11/18/04, effective 4/1/05. Statutory Authority: RCW 70.62.240. 94-23-077, § 246-360-150, filed 11/16/94, effective 12/17/94. Statutory Authority: RCW 43.20.050. 91-02-051 (Order 124B), recodified as § 246-360-150, filed 12/27/90, effective 1/31/91; 89-11-058 (Order 328), § 248-144-161, filed 5/17/89.]

WAC 246-360-160 Food and beverage services. (1) A licensee providing food service to guests must meet the requirements of:

(a) Chapter 246-215 WAC, Food service;

(b) Chapter 246-217 WAC, Food worker permits; and

(c) Local ordinances.

(2) A licensee providing cooking utensils and ice buckets for guests must:

(a) Ensure multiple-use ice buckets are clean and sanitary between guest occupancies;

(b) Wash, handle and store utensils in a safe and sanitary manner to protect from contamination;

(c) Maintain reusable cooking utensils and ice buckets in good condition, free from cracks, chips and distortions caused by damage or excessive use; and

(d) If a lodging unit is equipped with a kitchen that meets the requirements in WAC 246-360-110, the licensee must clean and sanitize utensils and ice buckets in a clean and sanitary area separate from bathrooms, water closet rooms, and adjoining handwashing sinks.

(3) If ice is provided, the licensee must store and dispense ice in a sanitary manner by:

(a) Cleaning and sanitizing ice machines at least twice a year or more often as needed or in accordance with the manufacturer's instructions; and

(b) Restricting guest access to unprotected bulk ice by:

(i) Providing self-dispensing ice machines or other "no contact" dispensing methods; or

(ii) Having employees dispense bulk ice to guests.

(4) The licensee must clean, maintain, and properly adjust the water flow in drinking fountains to ensure there is adequate pressure.

(5) Upon the department's request, the licensee must provide: A copy of the transient accommodations' current food service permit, and food handlers' permits issued by the local health jurisdiction.

[Statutory Authority: Chapter 70.62 RCW. 04-24-002, § 246-360-160, filed 11/18/04, effective 4/1/05. Statutory Authority: RCW 70.62.240. 94-23-077, § 246-360-160, filed 11/16/94, effective 12/17/94; 92-02-019 (Order 225B), § 246-360-160, filed 12/23/91, effective 1/23/92. Statutory Authority: RCW 43.20.050. 91-02-051 (Order 124B), recodified as § 246-360-160, filed 12/27/90, effective 1/31/91; 89-11-058 (Order 328), § 248-144-171, filed 5/17/89.]

WAC 246-360-180 Laundry. The licensee must:

(1) Provide clean, sanitary bedding, linens, towels, washcloths, and other items intended for guest use by:

(a) Using a commercial laundry service; or

(b) Washing and sanitizing laundry in accordance with the washer's manufacturer's recommendations and detergent and sanitizer instructions; and drying laundry in accordance with the dryer manufacturer's instructions when using a dryer.

(2) Ensure lint screens on on-site dryers are cleaned daily during normal operation or as needed.

(3) Store clean and sanitized bedding, linens, towels, washcloths and other items in an area:

(a) Designated for clean items only;

(b) Off the floor;

(c) Protected from contamination;

(d) Inaccessible to guests, pets or other animals; and

(e) Away from excessive moisture or humidity.

(4) Provide a means for handling, transporting, and separating soiled bedding, linens, towels, washcloths, and other items to prevent cross-contamination of clean items;

(5) Provide handwashing facilities that are readily accessible to employees as described in WAC 296-823-14030.

(6) Effective April 1, 2007, ensure that laundry room flooring is uncarpeted and covered with a cleanable floor covering.

[Statutory Authority: Chapter 70.62 RCW. 04-24-002, § 246-360-180, filed 11/18/04, effective 4/1/05. Statutory Authority: RCW 70.62.240. 94-23-077, § 246-360-180, filed 11/16/94, effective 12/17/94; 92-02-019 (Order 225B), § 246-360-180, filed 12/23/91, effective 1/23/92. Statutory Authority: RCW 43.20.050. 91-02-051 (Order 124B), recodified as § 246-360-180, filed 12/27/90, effective 1/31/91; 89-11-058 (Order 328), § 248-144-191, filed 5/17/89.]

WAC 246-360-200 Safety, chemical, and physical hazards. The licensee must:

(1) Establish and follow policies and procedures for properly and safely storing, labeling, and using all hazardous chemical agents or any substance bearing a warning label, such as cleaners, solvents, disinfectants and insecticides to assure they are:

(a) Stored to prevent contamination of clothing, towels, washcloths, and bedding materials, and away from food items or anything intended for consumption; and

(b) Used according to manufacturer's precautions and recommendations;

(2) Provide adequate and safe hand railing for all stairways, porches, and balconies including appropriate spacing between slats;

(3) Eliminate all known environmental health and safety hazards in and around the transient accommodation, including hazards resulting from fire, natural or other disasters and chemical or biological contamination. The presence of any hazard must be fully eliminated prior to reoccupancy of any affected area or living unit. When a hazard is confirmed, approval from any and all appropriate local authorities is required prior to reoccupancy;

(4) Ensure all doors providing access to a lodging unit are equipped with a suitable locking security device in compliance with applicable building and fire codes; and

(5) If spas, pools and/or hot tubs are provided, have available for review a copy of a current water recreation facility permit issued by the local health jurisdiction.

[Statutory Authority: Chapter 70.62 RCW. 04-24-002, § 246-360-200, filed 11/18/04, effective 4/1/05. Statutory Authority: RCW 70.62.240. 94-23-

077, § 246-360-200, filed 11/16/94, effective 12/17/94. Statutory Authority: RCW 43.20.050. 91-02-051 (Order 124B), recodified as § 246-360-200, filed 12/27/90, effective 1/31/91; 89-11-058 (Order 328), § 248-144-211, filed 5/17/89.]

WAC 246-360-220 Fire safety. The licensee must establish and maintain a fire-safe environment:

(1) Except as described in subsection (2) of this section, effective October 1, 2005, the licensee must establish and implement a written plan to ensure:

(a) Smoke detectors are installed and maintained in all sleeping rooms or sleeping areas. Nonrechargeable batteries in smoke detectors must be replaced each year or per manufacturer's instructions. Rechargeable batteries must be charged and maintained or replaced per the manufacturer's instructions.

(b) Fire extinguishers are inspected when initially placed in service and at approximately thirty-day intervals or at more frequent intervals when circumstances require. Fire extinguishers must be inspected manually or by electronic monitoring. Periodic inspection of fire extinguishers must include a check of at least the following items:

(i) Location in designated place;

(ii) No obstruction to access or visibility;

(iii) Operating instructions on nameplate, legible and facing outward;

(iv) Safety seals and tamper indicators not broken or missing;

(v) Fullness determined by weighing or "hefting";

(vi) Examination for obvious physical damage, corrosion, leakage, or clogged nozzle;

(vii) Pressure gauge reading or indicator in the operable range or position;

(viii) Condition of tires, wheels, carriage, hose, and nozzle checked (for wheeled units); and

(ix) Hazardous material identification system label in place.

(c) If a fire alarm system is installed:

(i) The system, including initiating devices and notification appliances, is regularly inspected, tested, and maintained by the owner or the owner's designated representative in accordance with the requirements of NFPA 72 and records of this inspection are maintained for review by the department during survey;

(ii) Unless otherwise recommended by the manufacturer, single and multiple station smoke alarms installed in one- and two-family dwellings must:

(A) Be replaced when they fail to respond to operability tests; and

(B) Must not remain in service longer than ten years from the date of manufacture.

(d) If an automatic fire suppression system is installed:

(i) The system must be inspected, tested and maintained in accordance with procedures established in NFPA 25; and

(ii) Valves designed to be open under normal system operation must be kept in open position and only closed with approval of the authority having jurisdiction.

(e) Obstructions, including storage, are not placed in the required means of egress, except projections allowed by the building code. Means of egress must not be obstructed in any manner and must remain free of any material or matter where its presence would obstruct or render the means of egress hazardous. Exit doors must not be locked in the direction of egress unless a special egress control device is installed per the building code.

(2) In lieu of the requirements of subsection (1) of this section, the licensee may provide evidence satisfactory to the department of a current fire, life, and safety inspection conducted by the local fire jurisdiction.

(3) The licensee must ensure that gas, oil-fired, or other fuel-burning appliances including fireplaces, dryers, stoves and water heaters, are vented to the out-of-doors as specified in the manufacturer's instructions and current applicable state codes adopted by the state building code council.

(4) The licensee may not use extension cords in the lodging units unless prior written approval from the local fire jurisdiction is available for the surveyor's review.

(5) If candle holders and other open flame candles, lanterns or other open flame light sources and decorations are present:

(a) Candle holders and other open flame devices must be designed to return to the upright position after being tilted to an angle of forty-five degrees from vertical.

(b) Liquid or solid-fueled lighting devices containing more than eight ounces of fuel must:

(i) Self-extinguish and not leak fuel at a rate of more than one-quarter teaspoon per minute if tipped over.

(ii) Have a fully enclosed flame except as follows:

(A) Openings on the side must not be more than three-eights inch in diameter;

(B) Openings on the top and the distance to the top must be such that a piece of tissue paper placed on the top will not ignite in less than ten seconds; and

(C) Candelabras with flame lit candles must be securely fastened in place to prevent overturning and must be located away from the occupant using the area and away from possible contact with drapes, curtains, or other combustibles.

(6) Portable space heaters, which are prohibited unless prior written approval from the local fire authority has been obtained and made available for the surveyor's review.

[Statutory Authority: Chapter 70.62 RCW. 04-24-002, § 246-360-220, filed 11/18/04, effective 4/1/05.]

WAC 246-360-230 Rustic resorts. (1) If the transient accommodation is a rustic resort, the licensee must ensure the transient accommodation meets the requirements of:

(a) The administrative regulations specified in:

(i) WAC 246-360-020 Licensure;

(ii) WAC 246-360-030 Responsibilities and rights—Licensee and department;

(iii) WAC 246-360-500 Exemptions; and

(iv) WAC 246-360-990 Fees.

(b) The environmental regulations specified in:

(i) WAC 246-360-040 Water supply and temperature control;

(ii) WAC 246-360-050 Sewage and liquid waste disposal;

(iii) WAC 246-360-070 (1), (4), (5), (6) and (7) Refuse and vectors;

(iv) WAC 246-360-100 (1) through (10) and (14) Bathrooms, water closets, and handwashing sinks;

(c) The transient accommodation regulations specified in:

(i) WAC 246-360-080 Construction and maintenance; and

(ii) WAC 246-360-090 Lodging units;

(d) Safety related regulations specified in:

(i) WAC 246-360-200 Safety, chemical and physical hazards; and

(ii) WAC 246-360-220 Fire safety.

(2) If the licensee provides the amenities and services addressed in all or part of the following sections, the licensee must also meet the requirements as specified in the sections:

(a) WAC 246-360-100 (11), (12) and (13) Bathrooms, water closets, and handwashing sinks;

(b) WAC 246-360-110 Lodging unit kitchens;

(c) WAC 246-360-120 Heating and cooling;

(d) WAC 246-360-150 Beds and bedding;

(e) WAC 246-360-160 Food and beverage services;

(f) WAC 246-360-180 Laundry;

(g) WAC 246-360-130 Lighting; and

(h) WAC 246-360-140 Ventilation.

(3) If the licensee does not provide the services and amenities addressed in subsection (2) of this section, the licensee must adopt the decision as written policy and upon request must make the policy available to the surveyor.

(4) A licensee may not advertise as providing services that are not provided at the rustic resort.

[Statutory Authority: Chapter 70.62 RCW. 04-24-002, § 246-360-230, filed 11/18/04, effective 4/1/05.]

WAC 246-360-500 Exemptions. (1) A licensee may request an exemption from a requirement in this chapter for part or all of a particular licensure period by submitting a written request to the department, including:

(a) The specific section number or numbers of the rule for which exemption is requested;

(b) An explanation of the circumstances involved;

(c) A proposed alternative that meets the intent of the rule and ensures guest safety and health;

(d) Any supporting research or other documentation; and

(e) The time period for which an exemption is requested.

(2) The department will grant or deny exemption requests after the department has received an exemption request with complete relevant information from the licensee. After review and consideration, the exception may be granted if it will not:

(a) Negate the purpose and intent of these rules;

(b) Place the safety or health of the guests in the transient accommodation in jeopardy;

(c) Lessen any fire and life safety or infection control provision of this chapter or other codes or regulations; and

(d) Affect any structural integrity of the building.

(3) The department will document the exemption decision and will keep the decision as a part of the current transient accommodation file. The licensee must maintain the documented exemption decision on file in the transient accommodation.

[Statutory Authority: Chapter 70.62 RCW. 04-24-002, § 246-360-500, filed 11/18/04, effective 4/1/05. Statutory Authority: RCW 70.62.240. 94-23-077, § 246-360-500, filed 11/16/94, effective 12/17/94.]

WAC 246-360-990 Fees. (1) The licensee or applicant must submit:

(a) An annual fee according to the following schedule:

NUMBER OF LODGING UNITS	FEE
3 - 10	$164.10
11 - 49	$326.30
50 - over	$657.00

(b) A late fee of fifty-four dollars and sixty cents, in addition to the full license renewal fee, if the full license renewal fee is not received by the department on the expiration date (see RCW 70.62.260);

(c) An additional fee of fifty-four dollars and sixty cents for an amended license due to changing the number of lodging units or the name of the transient accommodation.

(2) The department shall refund fees paid by the applicant for initial licensure as follows:

(a) If an application has been received but no on-site survey or technical assistance has been performed by the department, two-thirds of the fees paid, less a fifty dollar processing fee.

(b) If an application has been received and an on-site survey or technical assistance has been performed by the department, one-third of the fees paid, less a fifty dollar processing fee.

(c) No fees paid by the applicant will be refunded if any of the following applies:

(i) More than one on-site visit for any purpose has been performed by the department;

(ii) One year has elapsed since an initial licensure application is received by the department, but no license is issued because applicant failed to complete requirements for licensure; or

(iii) The amount to be refunded as calculated by (a) or (b) of this subsection is ten dollars or less.

[Statutory Authority: RCW 43.70.250. 06-21-108, § 246-360-990, filed 10/17/06, effective 11/17/06; 05-13-189, § 246-360-990, filed 6/22/05, effective 7/23/05. Statutory Authority: RCW 70.62.260. 05-05-072, § 246-360-990, filed 2/15/05, effective 3/18/05. Statutory Authority: RCW 43.70.-250, 18.46.030, 43.70.110, 71.12.470. 04-19-141, § 246-360-990, filed 9/22/04, effective 10/23/04. Statutory Authority: RCW 43.70.250 and 2002 c 371. 02-18-115, § 246-360-990, filed 9/4/02, effective 10/5/02. Statutory Authority: RCW 70.62.220, 43.70.110 and 43.70.250. 01-15-093, § 246-360-990, filed 7/18/01, effective 8/18/01; 99-23-015, § 246-360-990, filed 11/5/99, effective 12/6/99. Statutory Authority: RCW 43.70.110 and 43.70.250. 94-21-016, § 246-360-990, filed 10/6/94, effective 11/6/94. Statutory Authority: RCW 70.62.220, 70.62.230 and 43.70.250. 92-21-089 (Order 312), § 246-360-990, filed 10/21/92, effective 11/21/92. Statutory Authority: RCW 43.70.040. 91-02-049 (Order 121), recodified as § 246-360-990, filed 12/27/90, effective 1/31/91. Statutory Authority: RCW 43.20A.055. 87-17-045 (Order 2524), § 440-44-075, filed 8/17/87; 85-12-029 (Order 2236), § 440-44-075, filed 5/31/85. Statutory Authority: 1982 c 201. 82-13-011 (Order 1825), § 440-44-075, filed 6/4/82.]

Chapter 246-361 WAC
CHERRY HARVEST CAMPS

WAC

246-361-001 Cherry harvest camps—Purpose and applicability.
246-361-010 Definitions.
246-361-020 Technical assistance.
246-361-025 Operating license.
246-361-030 Maximum camp occupancy.
246-361-035 Variance and procedure.
246-361-045 Cherry harvest camp sites.
246-361-055 Water supply.

246-361-065	Sewage disposal.
246-361-070	Electricity and lighting.
246-361-075	Tents.
246-361-080	Recreation vehicles.
246-361-090	Laundry facilities.
246-361-095	Handwashing and bathing facilities.
246-361-100	Toilet facilities.
246-361-125	Cooking and food-handling facilities.
246-361-135	Cots, beds, bedding, and personal storage.
246-361-145	First aid and safety.
246-361-155	Refuse disposal.
246-361-165	Insect and rodent control.
246-361-175	Disease prevention and control.
246-361-990	Fees for cherry harvest camps.

WAC 246-361-001 Cherry harvest camps—Purpose and applicability. (1) Purpose. This chapter is adopted by the Washington state department of health to implement the provisions of chapter 70.114A RCW and establish minimum health and safety requirements for cherry harvest camps.

(2) Applicability.

(a) This chapter applies only to operators of cherry harvest camps using tents during the cherry harvest season. Operators using other housing must refer to WAC 296-307-16100, Part L1, or chapter 246-358 WAC.

(b) Operators with ten or more occupants are required to be licensed under this chapter. Operators with nine or less employees are not required to be licensed, but must comply with these standards.

[Statutory Authority: RCW 70.114A.065 and 70.114A.110. 00-06-082, § 246-361-001, filed 3/1/00, effective 3/1/00.]

WAC 246-361-010 Definitions. For the purposes of this chapter, the following words and phrases will have the following meanings unless the context clearly indicates otherwise:

"Building" means any structure used or intended for supporting or sheltering any use or occupancy that may include cooking, eating, sleeping and sanitation facilities.

"Cherry harvest camp" or **"camp"** means a place, area, or piece of land where dwelling units or camp sites are provided by an operator during the cherry harvest.

"Common food-handling facility" means an area designated by the operator for occupants to store, prepare, cook, and eat their own food supplies.

"Current certificate (first aid)" means a first-aid-training certificate that has not expired.

"Department" means the Washington state department of health and/or the department of labor and industries.

"Dining hall" means a cafeteria-type eating-place with food furnished by and prepared under the direction of the operator for consumption, with or without charge, by occupants.

"Drinking fountain" means a fixture equal to a nationally recognized standard or a designed-to-drain faucet, which provides potable drinking water under pressure. "Drinking fountain" does not mean a bubble-type water dispenser.

"Dwelling unit" means a shelter, building, or portion of a building, that may include cooking and eating facilities, which is:

• Provided and designated by the operator as either a sleeping area, living area, or both, for occupants; and

• Physically separated from other sleeping and common-use areas.

Note: For the purpose of this chapter, a "tent" is considered a dwelling unit.

"First-aid qualified" means that the person holds a current certificate of first-aid training from the American Red Cross or another course with equivalent content or hours.

"Food-handling facility" means a designated, enclosed area for preparation of food.

"Group A water system" means a public water system and includes community and noncommunity water systems.

(a) A community water system means any Group A water system providing service to fifteen or more service connections used by year-round residents for one hundred eighty or more days within a calendar year, regardless of the number of people, or regularly serving at least twenty-five year-round (i.e., more than one hundred eighty days per year) residents.

(b) Noncommunity water system means a Group A water system that is not a community water system. Noncommunity water systems are further defined as:

(i) Nontransient (NTNC) water system that provides service opportunity to twenty-five or more of the same nonresidential people for one hundred eighty or more days within a calendar year.

(ii) Transient (TNC) water system that serves:

• Twenty-five or more different people each day for sixty or more days within a calendar year;

• Twenty-five or more of the same people each day for sixty or more days, but less than one hundred eighty days within a calendar year; or

• One thousand or more people for two or more consecutive days within a calendar year.

"Group B water system" means a public water system: Constructed to serve less than fifteen residential services regardless of the number of people; or constructed to serve an average nonresidential population of less than twenty-five per day for sixty or more days within a calendar year; or any number of people for less than sixty days within a calendar year.

"Health officer" means the individual appointed as such for a local health department under chapter 70.05 RCW or appointed as the director of public health of a combined city-county health department under chapter 70.08 RCW.

"Livestock" means horses, cows, pigs, sheep, goats, poultry, etc.

"Livestock operation" means any place, establishment, or facility consisting of pens or other enclosures in which livestock is kept for purposes including, but not limited to, feeding, milking, slaughter, watering, weighing, sorting, receiving, and shipping. Livestock operations include, among other things, dairy farms, corrals, slaughterhouses, feedlots, and stockyards. Operations where livestock can roam on a pasture over a distance may be treated as outside the definition.

"MSPA" means the Migrant and Seasonal Agricultural Worker Protection Act (96 Stat. 2583; 29 U.S.C. Sec. 1801 et seq.).

"Occupant" means a temporary worker or a person who resides with a temporary worker at the camp site.

"Operating license" means a document issued annually by the department of health or contracted health officer authorizing the use of temporary-worker housing.

"Operator" means a person holding legal title to the land on which the camp is located. However, if the legal title and the right to possession are in different persons, "operator" means a person having the lawful control or supervision over the camp.

"Recreational park trailers" means a trailer-type unit that is primarily designed to provide temporary living quarters for recreational, camping, or seasonal use, that meets the following criteria:

• Built on a single chassis, mounted on wheels;

• Having a gross trailer area not exceeding 400 square feet (37.15 square meters) in the set-up mode; and

• Certified by the manufacturer as complying with ANSI A119.5.

"Recreational vehicle" means a vehicular type unit primarily designed as temporary living quarters for recreational camping, travel, or seasonal use that either has its own mode of power or is mounted on, or towed by, another vehicle. Recreational vehicles include: Camping trailers, fifth-wheel trailers, motor homes, travel trailers, and truck campers, but does not include pickup trucks with camper shells, canopies, or other similar coverings.

"Refuse" means solid wastes, rubbish, or garbage.

"Temporary worker" means an agricultural employee employed intermittently and not residing year-round at the same site.

"Tent" means an enclosure or shelter constructed of fabric or pliable material composed of rigid framework to support tensioned membrane that provides the weather barrier.

"WISHA" means the Washington Industrial Safety and Health Act, chapter 49.17 RCW, administered by the Washington state department of labor and industries.

[Statutory Authority: RCW 70.114A.110 and 2002 c 23. 02-23-071, § 246-361-010, filed 11/19/02, effective 1/1/03. Statutory Authority: RCW 70.114A.065 and 70.114A.110. 00-06-082, § 246-361-010, filed 3/1/00, effective 3/1/00.]

WAC 246-361-020 Technical assistance. An operator may request technical assistance from the department of health or the department of labor and industries to assist in compliance with this chapter.

[Statutory Authority: RCW 70.114A.065 and 70.114A.110. 00-06-082, § 246-361-020, filed 3/1/00, effective 3/1/00.]

WAC 246-361-025 Operating license. A cherry tent camp license is limited to one week before the commencement through one week following the conclusion of the cherry harvest within the state. The operator:

(1) Must request a license from the department of health or health officer when:

(a) The camp will house ten or more occupants;

(b) Compliance with MSPA requires a license; or

(c) Construction of camp buildings requires a license under chapter 246-359 WAC, Temporary worker housing construction standard.

(2) Must apply for an operating license at least forty-five days prior to either the use of the camp or the expiration of an existing operating license by submitting to the department of health or health officer:

(a) A completed application on a form provided by the department or health officer;

(b) Proof water system is current with all water tests required by chapter 246-290 or 246-291 WAC; and

(c) A fee as specified in WAC 246-361-990.

(3) Will receive an operating license for the maximum number of occupants as determined by WAC 246-361-030 when:

(a) The application requirements from subsection (2) of this section are met;

(b) The site is in compliance with this chapter as demonstrated by a licensing survey completed by the department; and

(c) The operator complies with the corrective action plan established by the department.

(4) Must post the operating license in a place readily accessible to workers.

(5) Must notify the department of health in the event of a transfer of ownership.

(6) Must cooperate with the department during on-site inspections.

[Statutory Authority: RCW 70.114A.110 and 2002 c 23. 02-23-071, § 246-361-025, filed 11/19/02, effective 1/1/03. Statutory Authority: RCW 70.114A.065 and 70.114A.110. 00-06-082, § 246-361-025, filed 3/1/00, effective 3/1/00.]

WAC 246-361-030 Maximum camp occupancy. The maximum occupancy for a camp will be based on:

(1) The number of shelters provided; and

(2) The number of bathing, food handling, handwashing, laundry, and toilet facilities.

[Statutory Authority: RCW 70.114A.065 and 70.114A.110. 00-06-082, § 246-361-030, filed 3/1/00, effective 3/1/00.]

WAC 246-361-035 Variance and procedure. Conditions may exist in operations that a state standard will not have practical use. The director of the department of labor and industries may issue a variance from the requirements of the standard when another means of providing equal protection is provided. The substitute means must provide equal protection in accordance with the requirements of chapter 49.17 RCW and chapter 296-350 WAC, variances.

Applications for variances will be reviewed and may be investigated by the department of labor and industries and the department of health. Variances granted will be limited to the specific case or cases covered in the application and may be revoked for cause. The variance must remain prominently posted on the premises while in effect.

Variance application forms may be obtained from the Department of Labor and Industries, P.O. Box 44625, Olympia, Washington 98504-4625 or the Department of Health, P.O. Box 47852, Olympia, Washington 98504-7852, upon request. Requests for variances from safety and health standards must be made in writing to the director or the assistant director, Department of Labor and Industries, P.O. Box 44625, Olympia, Washington 98504-4625. (Reference RCW 49.17.080 and 49.17.090.)

[Statutory Authority: RCW 70.114A.065 and 70.114A.110. 00-06-082, § 246-361-035, filed 3/1/00, effective 3/1/00.]

WAC 246-361-045 Cherry harvest camp sites. The operator must:

(1) Locate and operate a site to prevent a health or safety hazard that is:

(a) Adequately drained and any drainage from and through the camp must not endanger any domestic or public water supply;

(b) Free from periodic flooding and depressions in which water may become a nuisance;

(c) At least two hundred feet from a swamp, pool, sink hole, or other surface collection of water unless there is a mosquito prevention program for those areas;

(d) Large enough to prevent overcrowding of necessary structures. The principal camp area for sleeping and for food preparation and eating must be at least five hundred feet from where livestock are kept; and

(e) Maintained in a clean and sanitary condition.

(2) Develop and implement a cherry harvest camp management plan and rules for camps with ten or more occupants to assure that the camp is operated in a safe and secure manner and is kept within the approved capacity. Additionally, the licensed operator must:

(a) Inform residents of the rules, in a language the resident understands, by providing individual copies of the rules to each camp resident or posting the rules in the camp area; and

(b) Restrict the number of occupants in the camp to the capacity as determined by the department.

(3) When closing the camp permanently or for the season, complete the following:

(a) Dispose of all refuse to prevent nuisance;

(b) Fill all abandoned toilet pits with earth; and

(c) Leave the grounds and buildings in a clean and sanitary condition.

[Statutory Authority: RCW 70.114A.065 and 70.114A.110. 00-06-082, § 246-361-045, filed 3/1/00, effective 3/1/00.]

WAC 246-361-055 Water supply. The operator must:

(1) Provide a water system that is:

(a) Approved as a Group A public water system in compliance with chapter 246-290 WAC if the water system supplies fifteen or more connections or twenty-five or more people at least sixty days per year or provide proof the camp receives water from an approved Group A public water system; or

(b) Approved as a Group B water system in compliance with chapter 246-291 WAC if the water system supplies less than fifteen connections and does not supply twenty-five or more people at least sixty days per year.

Note: A "same farm exemption" applies to a public water system with four or fewer connections, all of which serve residences on the same farm. "Same farm" means a parcel of land or series of parcels that are connected by covenants and devoted to the production of livestock or agricultural commodities for commercial purposes and does not qualify as a Group A water system.

	Avg. daily population of less than 25 people	Avg. daily population of 25 or more people
At least 60 days or more	Group B	Group A TNC
59 days or less	Group B	Group B

Note: If your system has 15 or more connections, regardless of the population, it is a Group A water system.

(2) Provide an adequate and convenient hot and cold water supply for drinking, cooking, bathing, and laundry purposes.

Note: An "adequate water supply" means the storage capacity of the potable water system must meet the requirements of ASHRAE 1999 Applications Handbook, chapter 48, Water Systems.

(3) Ensure that the distribution lines are able to maintain the working pressure of the water piping system at not less than fifteen pounds per square inch after allowing for friction and other pressure losses.

(4) When water is not piped to each dwelling unit, provide cold, potable, running water under pressure within one hundred feet of each dwelling unit.

(5) When water sources are not available in each individual tent, provide one or more drinking fountains for each one hundred occupants or fraction thereof. Prohibit the use of common drinking cups or containers from which water is dipped or poured.

(6) When water is unsafe for drinking purposes and accessible to occupants, post a sign by the source reading "Do not drink. Do not use for washing. Do not use for preparing food." printed in English and in the native language of the persons occupying the camp, or marked with easily understood pictures or symbols.

[Statutory Authority: RCW 70.114A.065 and 70.114A.110. 00-06-082, § 246-361-055, filed 3/1/00, effective 3/1/00.]

WAC 246-361-065 Sewage disposal. An operator must:

(1) Provide sewage disposal systems in accordance with local health jurisdictions.

(2) Connect all drain, waste, and vent systems from buildings to:

(a) Public sewers, if available; or

(b) Approved on-site sewage disposal systems that are designed, constructed, and maintained as required in chapter 246-272 WAC, chapter 173-240 WAC, and local ordinances.

[Statutory Authority: RCW 70.114A.065 and 70.114A.110. 00-06-082, § 246-361-065, filed 3/1/00, effective 3/1/00.]

WAC 246-361-070 Electricity and lighting. (1) **General electricity requirements.**

(a) The operator must supply electricity to all dwelling units, kitchen facilities, bathroom facilities, common areas, and laundry facilities.

(b) All electrical wiring, fixtures and electrical equipment must comply with department of labor and industries regulations, chapter 19.28 RCW and local ordinances, and maintained in a safe condition.

(2) **Electricity requirements in tents.**

(a) Each individual tent must have at least one separate floor-type or wall-type convenience outlet. If the operator provides a refrigerator in the tent, a dedicated outlet must be provided for it.

(b) All electrical wiring and equipment installed in tents must meet the requirements of WAC 296-46-100.

(c) All electrical appliances to be connected to the electrical supply must meet the requirements for the load calculations as required by chapter 19.28 RCW.

(d) Electrical wiring exiting the tent to connect to the GFI outside outlet must be placed in approved flexible conduit not to exceed six feet in length.

(e) All wiring located inside the tent must be placed in conduit for protection and connected to a surface to secure the wiring to prevent movement. Wiring must be located to prevent tripping or safety hazards.

(f) Receptacles and lighting fixtures must be UL Listed and approved by the department for use in the tent.

(3) **General lighting requirements.**

(a) The operator must provide adequate lighting sufficient to carry on normal daily activities in all common use areas.

(b) Laundry and toilet rooms and rooms where people congregate must have at least one ceiling-type or wall-type fixture. Where portable toilets are used, lighting requirements can be met by area illumination.

(c) The operator must provide adequate lighting for safe passage for camp occupants to handwashing sinks and toilets.

(d) The operator must provide adequate lighting for shower rooms during hours of operation.

Note: Lighting requirements may be met by natural or artificial means.

(4) **Lighting requirements in tents.**

(a) Tents must have adequate lighting sufficient to carry on all normal daily activities. For example: Three 100-watt bulbs located at the top ridge of the frame and are UL Listed or equivalent.

(b) Each tent must have at least one ceiling-type light fixture.

(c) Food preparation areas, if located in the tent, must have at least one lighting fixture located to provide task lighting over the food preparation area.

(d) Alternate lighting appliances must provide adequate lighting. In addition, if using two or more propane, butane, or white gas lighting appliances, a carbon monoxide monitor must be provided and located not more than thirty inches from the floor.

[Statutory Authority: RCW 70.114A.065 and 70.114A.110. 00-06-082, § 246-361-070, filed 3/1/00, effective 3/1/00.]

WAC 246-361-075 Tents. (1) **Tents must provide protection from the elements.**

(2) **Structural stability and floors.**

(a) Tents and their supporting framework must be adequately braced and anchored to prevent weather related collapse. Documentation of the structural stability must be furnished to the department.

(b) Floors must be smooth, flat, and without breaks or holes to provide a hard, stable walking surface. Nonridged flooring supported by grass, dirt, soil, gravel, etc., are not acceptable. Floors that are constructed of wood or concrete must comply with the building code, chapter 19.27 RCW or temporary worker housing construction standard, chapter 246-359 WAC.

(c) Floor systems must be designed to prevent the entrance of snakes and rodents.

(3) **Flame-retardant treatments.**

(a) The sidewalls, drops, and tops of tents shall be composed of flame-resistant material or treated with a flame retardant in an approved manner.

(b) Floor coverings, which are integral to the tent, and the bunting shall be composed of flame-resistant material or treated with a flame retardant in an approved manner and in accordance with Uniform Building Code, Standard 31.1.

(c) All tents must have a permanently affixed label bearing the following information:

(i) Identification of tent size and fabric or material type;

(ii) For flame-resistant materials, the necessary information to determine compliance with this section and National Fire Protection Association Standard 701, Standard Methods of Fire Tests for Flame-resistant Textiles and Films;

(iii) For flame-retardant materials, the date that the tent was last treated with an approved flame-retardant;

(iv) The trade name and type of flame-retardant utilized in the flame-retardant treatment; and

(v) The name of the person and firm that applied the flame-retardant.

(4) **Means of egress.**

(a) At least one door must lead to the outside of the tent and the area designated for refuge must be accessible and remain clear of storage materials or hazards.

(b) The door must not be obstructed in any manner and must remain free of any material or matter where its presence would obstruct or render the exit hazardous.

(c) If cooking facilities are provided in tents, the window located opposite the door must have a means to open the window or provide an easily openable space, for example, a zipper which opens downward toward the floor.

(5) **Floor area.** The operator must:

(a) If cooking facilities are provided in the tent, provide at least seventy square feet of floor space for one occupant and fifty square feet for each additional occupant; or

(b) If cooking facilities are not provided in the tent, provide at least fifty square feet of floor space for each occupant in rooms used for sleeping purposes.

(6) **Ceiling height.**

(a) If the tent has a sloped ceiling, a ceiling height of at least seven feet is required in fifty percent of the total area.

(b) No portion of the tent measuring less than six feet from the flooring to the ceiling will be included in any computation of the minimum floor area.

(7) **Windows and ventilation.**

(a) Provide a window area equal to one-tenth of the total floor area in each habitable room which opens at least half way or more directly to the outside for cross-ventilation and has sixteen-mesh screens on all exterior openings.

(b) The windows must have weather-resistant flaps, which will cover the window area and a means of fastening the flaps to provide protection from the elements and allow privacy for the occupants.

[Statutory Authority: RCW 70.114A.065 and 70.114A.110. 00-06-082, § 246-361-075, filed 3/1/00, effective 3/1/00.]

WAC 246-361-080 Recreation vehicles. The operator must ensure that all recreational vehicles and park trailers meet the requirements of chapters 296-150P and 296-150R WAC.

[Statutory Authority: RCW 70.114A.065 and 70.114A.110. 00-06-082, § 246-361-080, filed 3/1/00, effective 3/1/00.]

WAC 246-361-090 Laundry facilities. An operator must:

(1) Provide one laundry tray or tub or one mechanical washing machine for every thirty persons.

(2) Provide facilities for drying clothes.

(3) Provide sloped, coved floors of nonslip impervious materials with floor drains.

(4) Maintain laundry facilities in a clean and sanitary condition.

[Statutory Authority: RCW 70.114A.065 and 70.114A.110. 00-06-082, § 246-361-090, filed 3/1/00, effective 3/1/00.]

WAC 246-361-095 Handwashing and bathing facilities. An operator must:

(1) Provide one handwash sink for every six persons in centralized facilities. Handwash sinks must be adjacent to toilets.

(2) Provide one showerhead for every ten persons in centralized facilities.

(3) Provide one "service sink" in each building used for centralized laundry, handwashing, or bathing.

(4) Provide sloped, coved floors of nonslip impervious materials with floor drains.

(5) Provide walls that are smooth and nonabsorbent to the height of four feet. If partitions are used, they must be smooth and nonabsorbent to the height of four feet.

(6) Provide all showers, baths, and shower rooms with floor drains to remove wastewater.

(7) Provide cleanable, nonabsorbent waste containers.

(8) Maintain bathing and handwashing facilities in a clean and sanitary condition, cleaned at least daily.

(9) Ensure shower facilities provide privacy from the opposite sex and the public.

(10) Make showers and bathing facilities available when needed.

[Statutory Authority: RCW 70.114A.065 and 70.114A.110. 00-06-082, § 246-361-095, filed 3/1/00, effective 3/1/00.]

WAC 246-361-100 Toilet facilities. (1) **General toilet requirements.** Operators must provide flush toilets, chemical toilets, or pit privies. The department of health or health officer according to requirements in chapter 246-272 WAC, must approve pit privies. The operator must comply with the following:

(a) Flush toilets, chemical toilets, and urinals must not be located in any tent.

(b) When chemical toilets are provided they must be:

(i) Located at least fifty feet from any dwelling unit or food-handling facility;

(ii) Maintained by a licensed waste disposal company; and

(iii) Comply with local ordinances.

(c) When urinals are provided:

(i) There must be one urinal or two linear feet of urinal trough for each twenty-five men;

(ii) The floors and walls surrounding a urinal and extending out at least fifteen inches on all sides, must be constructed of materials which will not be adversely affected by moisture;

(iii) The urinal must have an adequate water flush where water under pressure is available; and

(iv) Urinal troughs are prohibited in pit privies.

(d) When pit privies are approved they must be:

(i) At least one hundred feet away from any dwelling unit or food-handling facility; and

(ii) Constructed to exclude insects and rodents from the pit.

(2) **Centralized toilet facilities.** The operator must meet the following requirements when centralized toilet facilities are provided:

(a) Provide toilet rooms with:

(i) One toilet for every fifteen persons;

(ii) One handwashing sink for every six persons;

(iii) Either a window of at least six square feet opening directly to the outside, or be satisfactorily ventilated; and

(iv) All outside openings screened with sixteen-mesh material.

(b) Locate toilet rooms so that:

(i) Toilets are within two hundred feet of the door of each tent; and

(ii) No person has to pass through a sleeping room to reach a toilet room.

(c) Maintain toilets in a clean and sanitary condition, cleaned at least daily.

(d) Provide each toilet compartment with an adequate supply of toilet paper.

(e) When shared facilities will be used for both men and women:

(i) Provide separate toilet rooms for each sex with a minimum of one toilet room for each sex and meet the required ratios as defined in (a) of this subsection;

(ii) Identify each room "men" and "women" with signs printed in English and in the native language of the persons occupying the camp, or identified with easily understood pictures or symbols; and

(iii) Separate facilities by solid walls or partitions extending from the floor to the roof or ceiling when facilities for each sex are located in the same building.

[Statutory Authority: RCW 70.114A.065 and 70.114A.110. 00-06-082, § 246-361-100, filed 3/1/00, effective 3/1/00.]

WAC 246-361-125 Cooking and food-handling facilities. The operator must provide enclosed or screened cooking and food-handling facilities for all occupants. Adequate tables and chairs or seating must be provided for camp occupants.

(1) If the operator provides cooking facilities in tents, the operator must provide:

(a) An operable cook stove or hot plate with at least one cooking surface for every four occupants;

(b) A sink with hot and cold running potable water under pressure at each tent site;

(c) At least two (2) cubic feet of dry food storage space per occupant;

(d) Nonabsorbent, easily cleanable food preparation counters situated off the floor;

(e) Mechanical refrigeration conveniently located and able to maintain a temperature of 45°F or below, with at least one (1) cubic foot of storage space per occupant; and

(f) Adequate ventilation for cooking facilities.

(2) If the operator provides common food-handling facilities, the operator must provide:

(a) A room or building, adequate in size, separate from any tent;

(b) No direct openings to living or sleeping areas from the common food-handling facility;

(c) An operable cook stove or hot plate with at least one cooking surface for every four occupants, or four cooking surfaces for every two families;

(d) Sinks with hot and cold running potable water under pressure;

(e) At least two (2) cubic feet of dry food storage space per occupant;

(f) Nonabsorbent, easily cleanable food preparation counters situated off the floor;

(g) Mechanical refrigeration conveniently located and able to maintain a temperature of 45°F or below, with at least one (1) cubic foot of storage space per occupant;

(h) Fire-resistant, nonabsorbent, nonasbestos, and easily cleanable wall coverings adjacent to cooking areas;

(i) Nonabsorbent, easily cleanable floors; and

(j) Adequate ventilation for cooking facilities.

(3) The operator must ensure that dining hall facilities comply with chapter 246-215 WAC, Food service.

[Statutory Authority: RCW 70.114A.065 and 70.114A.110. 00-06-082, § 246-361-125, filed 3/1/00, effective 3/1/00.]

WAC 246-361-135 Cots, beds, bedding, and personal storage. The operator must provide cots, beds or bunks for each occupant, not to exceed the maximum occupancy approved by the department or health officer.

(1) Beds or bunks must be furnished with clean mattresses and maintained in a clean and sanitary condition.

(2) The operator must:

(a) Provide sufficient clearance between each cot, bed, or bunk and the floor or provide a commercially available cot, bed, or bunk; and

(b) Allow space to separate beds laterally and end to end by at least thirty-six inches when single beds are used.

(3) When bunk beds are used the operator must:

(a) Allow space to separate beds laterally and end to end by at least forty-eight inches; and

(b) Maintain a minimum space of twenty-seven inches between the upper and lower bunks.

(4) Locate cots, beds, or bunks at least thirty inches or more from cooking surfaces.

(5) The use of triple bunk beds is prohibited.

(6) The operator must provide suitable storage facilities for clothing and personal articles in each tent.

[Statutory Authority: RCW 70.114A.065 and 70.114A.110. 00-06-082, § 246-361-135, filed 3/1/00, effective 3/1/00.]

WAC 246-361-145 First aid and safety. The operator must:

(1) Comply with chapters 15.58 and 17.21 RCW, chapter 16-228 WAC, chapter 296-307 WAC Part I and J, and pesticide label instructions when using pesticides in and around the camp.

(2) Prohibit, in the housing area, the use, storage, and mixing of flammable, volatile, or toxic substances other than those intended for household use.

(3) Provide readily accessible first-aid equipment.

(4) Ensure that a first-aid qualified person is readily accessible to administer first aid at all times.

(5) Store or remove unused refrigerator units to prevent access by children.

[Statutory Authority: RCW 70.114A.065 and 70.114A.110. 00-06-082, § 246-361-145, filed 3/1/00, effective 3/1/00.]

WAC 246-361-155 Refuse disposal. The operator must:

(1) Comply with local sanitation codes for removing refuse from camp areas and disposing of refuse.

(2) Protect against rodent harborage, insect breeding, and other health hazards while storing, collecting, transporting, and disposing of refuse.

(3) Store refuse in fly-tight, rodent-tight, impervious, and cleanable or single-use containers.

(4) Keep refuse containers clean.

(5) Provide a container on a wooden, metal, or concrete stand within one hundred feet of each dwelling unit.

(6) Empty refuse containers at least twice each week, and when full.

[Statutory Authority: RCW 70.114A.065 and 70.114A.110. 00-06-082, § 246-361-155, filed 3/1/00, effective 3/1/00.]

WAC 246-361-165 Insect and rodent control. The operator must take effective measures to prevent and control insect and rodent infestation.

[Statutory Authority: RCW 70.114A.065 and 70.114A.110. 00-06-082, § 246-361-165, filed 3/1/00, effective 3/1/00.]

WAC 246-361-175 Disease prevention and control. The operator must:

(1) Report immediately to the local health officer the name and address of any individual in the camp known to have or suspected of having a communicable disease.

(2) Report immediately to the local health officer:

(a) Suspected food poisoning;

(b) An unusual prevalence of fever, diarrhea, sore throat, vomiting, or jaundice; or

(c) Productive cough, or when weight loss is a prominent symptom among occupants.

(3) Prohibit any individual with a communicable disease from preparing, cooking, serving, or handling food, foodstuffs, or materials in dining halls.

[Statutory Authority: RCW 70.114A.065 and 70.114A.110. 00-06-082, § 246-361-175, filed 3/1/00, effective 3/1/00.]

WAC 246-361-990 Fees for cherry harvest camps. (1) **License and survey fees.** A cherry camp operator must submit to the department a license fee of twenty-five dollars and an on-site survey fee as specified in Table 990.

Note: The on-site survey fee for licensing includes four surveys (one prior to camp being occupied, two while camp is occupied, and one to verify the camp has been closed).

(2) **Additional survey fees.** An operator will be charged an additional on-site survey fee for any follow-up surveys, when the department determines additional on-site surveys are necessary to confirm compliance with this chapter. The additional survey will be one-half the cost of the on-site survey fee as stated in Table 990.

(3) **Complaint investigation fees.** Operators will be charged for each on-site survey conducted by the department when a complaint investigation results in the complaint being found valid. This fee will be charged according to Table 990 for on-site survey.

(4) **Water test fees.** An operator will be directly billed for each water sample collected by the department when the operator has not submitted the water tests as required by WAC 246-361-025 and 246-361-055.

(5) **Refunds.** The license and on-site survey fee may be refunded when the operator submits:

(a) A written request to the department; and

(b) Provides documentation that the housing was not occupied during the license period.

TABLE 990

NUMBER OF UNITS	ON-SITE SURVEY FEE (includes cost of all survey types: Initial, annual, follow-up, complaint)	LICENSE FEE	TOTAL
0 to 9 persons	$45.00	$25.00	$70.00
10 to 50 persons	70.00	25.00	95.00
51 to 100 persons	100.00	25.00	125.00
101 to 150 persons	125.00	25.00	150.00
for each additional 50 persons over 150 add $25	125.00+ $25.00 for each 50 persons	25.00	

[Statutory Authority: RCW 70.114A.065 and 70.114A.110. 00-06-082, § 246-361-990, filed 3/1/00, effective 3/1/00.]

Chapter 246-366 WAC
PRIMARY AND SECONDARY SCHOOLS

WAC

246-366-001 Introduction.
246-366-010 Definitions.
246-366-020 Substitutions.
246-366-030 Site approval.
246-366-040 Plan review and inspection of schools.
246-366-050 Buildings.
246-366-060 Plumbing, water supply and fixtures.
246-366-070 Sewage disposal.
246-366-080 Ventilation.
246-366-090 Heating.
246-366-100 Temperature control.
246-366-110 Sound control.
246-366-120 Lighting.
246-366-130 Food handling.
246-366-140 Safety.
246-366-150 Exemption.

WAC 246-366-001 Introduction. These rules and regulations are established as minimum environmental standards for educational facilities and do not necessarily reflect optimum standards for facility planning and operation.

[Statutory Authority: RCW 43.20.050. 91-02-051 (Order 124B), recodified as § 246-366-001, filed 12/27/90, effective 1/31/91; Order 55, § 248-64-210, filed 6/8/71.]

WAC 246-366-010 Definitions. The following definitions shall apply in the interpretation and the enforcement of these rules and regulations:

(1) "School" - Shall mean any publicly financed or private or parochial school or facility used for the purpose of school instruction, from the kindergarten through twelfth grade. This definition does not include a private residence in which parents teach their own natural or legally adopted children.

(2) "Board of education" - An appointive or elective board whose primary responsibility is to operate public or private or parochial schools or to contract for school services.

(3) "Instructional areas" - Space intended or used for instructional purposes.

(4) "New construction" - Shall include the following:

(a) New school building.

(b) Additions to existing schools.

(c) Renovation, other than minor repair, of existing schools.

(d) Schools established in all or part of any existing structures, previously designed or utilized for other purposes.

(e) Installation or alteration of any equipment or systems, subject to these regulations, in schools.

(f) Portables constructed after the effective date of these regulations.

(5) "Occupied zone" - Is that volume of space from the floor to 6 feet above the floor when determining temperature and air movement, exclusive of the 3 foot perimeter on the outside wall.

(6) "Site" - Shall include the areas used for buildings, playgrounds and other school functions.

(7) "Portables" - Any structure that is transported to a school site where it is placed or assembled for use as part of a school facility.

(8) "Health officer" - Legally qualified physician who has been appointed as the health officer for the city, town, county or district public health department as defined in RCW 70.05.010(2), or his authorized representative.

(9) "Secretary" - Means secretary of the Washington state department of health or the secretary's designee.

(10) "Department" - Means Washington state department of health.

[Statutory Authority: RCW 43.20.050. 92-02-019 (Order 225B), § 246-366-010, filed 12/23/91, effective 1/23/92; 91-02-051 (Order 124B), recodified as § 246-366-010, filed 12/27/90, effective 1/31/91; 82-07-015 (Order 225), § 248-64-220, filed 3/9/82; Order 131, § 248-64-220, filed 8/5/76; Order 55, § 248-64-220, filed 6/8/71.]

WAC 246-366-020 Substitutions. The secretary may allow the substitution of procedures or equipment for those outlined in these regulations, when such procedures or equipment have been demonstrated to be equivalent to those heretofore prescribed. When the secretary judges that such substitutions are justified, he shall grant permission for the substitution in writing. Requests for substitution shall be directed to the jurisdictional health officer who shall immediately forward them, including his recommendations, to the secretary. All decisions, substitutions, or interpretations shall be made a matter of public record and open to inspection.

[Statutory Authority: RCW 43.20.050. 91-02-051 (Order 124B), recodified as § 246-366-020, filed 12/27/90, effective 1/31/91; Order 55, § 248-64-230, filed 6/8/71.]

WAC 246-366-030 Site approval. (1) Before a new school facility is constructed, an addition is made to an existing school facility, or an existing school facility is remodeled, the board of education shall obtain written approval from the health officer that the proposed development site presents no health problems. The board of education may request the health officer make a survey and submit a written health appraisal of any proposed school site.

(2) School sites shall be of a size sufficient to provide for the health and safety of the school enrollment.

(3) Noise from any source at a proposed site for a new school, an addition to an existing school, or a portable classroom shall not exceed an hourly average of 55 dBA ($Leq_{60\ minutes}$) and shall not exceed an hourly maximum (Lmax) of 75 dBA during the time of day the school is in session; except sites exceeding these sound levels are acceptable if a plan for sound reduction is included in the new construction proposal and the plan for sound reduction is approved by the health officer.

[Statutory Authority: RCW 43.20.050. 91-02-051 (Order 124B), recodified as § 246-366-030, filed 12/27/90, effective 1/31/91; 89-20-026 (Order 333), § 248-64-240, filed 9/28/89, effective 10/29/89; Order 88, § 248-64-240, filed 10/3/73; Order 55, § 248-64-240, filed 6/8/71.]

WAC 246-366-040 Plan review and inspection of schools. (1) Any board of education, before constructing a new facility, or making any addition to or major alteration of an existing facility or any of the utilities connected with the facility, shall:

(a) First submit final plans and specifications of such buildings or changes to the jurisdictional health officer;

(b) Shall obtain the health officer's recommendations and any required changes, in writing;

(c) Shall obtain written approval from the health officer, to the effect that such plans and specifications comply with these rules and regulations.

(2) The health officer shall:

(a) Conduct a preoccupancy inspection of new construction to determine its conformity with the approved plans and specifications.

(b) Make periodic inspections of each existing school within his jurisdiction, and forward to the board of education and the administrator of the inspected school a copy of his findings together with any required changes and recommendations.

[Statutory Authority: RCW 43.20.050. 91-02-051 (Order 124B), recodified as § 246-366-040, filed 12/27/90, effective 1/31/91; Order 55, § 248-64-250, filed 6/8/71.]

WAC 246-366-050 Buildings. (1) Buildings shall be kept clean and in good repair.

(2) Instructional areas shall have a minimum average ceiling height of 8 feet. Ceiling height shall be the clear vertical distance from the finished floor to the finished ceiling. No projections from the finished ceiling shall be less than 7 feet vertical distance from the finished floor, e.g., beams, lighting fixtures, sprinklers, pipe work.

(3) All stairway[s] and steps shall have handrails and nonslip treads.

(4) The floors shall have an easily cleanable surface.

(5) The premises and all buildings shall be free of insects and rodents of public health significance and conditions which attract, provide harborage and promote propagation of vermin.

(6) All poisonous compounds shall be easily identified, used with extreme caution and stored in such a manner as to prevent unauthorized use or possible contamination of food and drink.

(7) There shall be sufficient space provided for the storage of outdoor clothing, play equipment and instructional equipment. The space shall be easily accessible, well lighted, heated and ventilated.

(8) Schools shall be provided with windows sufficient in number, size and location to permit students to see to the outside. Windows are optional in special purpose instructional areas including, but not limited to, little theaters, music areas, multipurpose areas, gymnasiums, auditoriums, shops, libraries and seminar areas. No student shall occupy an instructional area without windows more than 50 percent of the school day.

(9) Exterior sun control shall be provided to exclude direct sunlight from window areas and skylights of instructional areas, assembly rooms and meeting rooms during at least 80 percent of the normal school hours. Each area shall be considered as an individual case. Sun control is not required for sun angles less than 42 degrees up from the horizontal. Exterior sun control is not required if air conditioning is provided, or special glass installed having a total solar energy transmission factor less than 60 percent.

[Statutory Authority: RCW 43.20.050. 91-02-051 (Order 124B), recodified as § 246-366-050, filed 12/27/90, effective 1/31/91; 82-07-015 (Order 225), § 248-64-260, filed 3/9/82; 79-08-078 (Order 183), § 248-64-260, filed 7/26/79; Order 124, § 248-64-260, filed 3/18/76; Order 55, § 248-64-260, filed 6/8/71.]

WAC 246-366-060 Plumbing, water supply and fixtures. (1) Plumbing: Plumbing shall be sized, installed, and maintained in accordance with the state building code. However, local code requirements shall prevail, when these requirements are more stringent or in excess of the state building code.

(2) Water supply: The water supply system for a school shall be designed, constructed, maintained and operated in accordance with chapter 246-290 WAC.

(3) Toilet and handwashing facilities.

(a) Adequate, conveniently located toilet and handwashing facilities shall be provided for students and employees. At handwashing facilities soap and single-service towels shall be provided. Common use towels are prohibited. Warm air dryers may be used in place of single-service towels. Toilet paper shall be available, conveniently located adjacent to each toilet fixture.

(b) The number of toilet and handwashing fixtures in schools established in existing structures, previously designed or utilized for other purposes shall be in accordance with the state building code. However, local code requirements shall prevail, when these requirements are more stringent or in excess of the state building code.

(c) Toilet and handwashing facilities must be accessible for use during school hours and scheduled events.

(d) Handwashing facilities shall be provided with hot water at a maximum temperature of 120 degrees Fahrenheit. If hand operated self-closing faucets are used, they must be of a metering type capable of providing at least ten seconds of running water.

(4) Showers:

(a) Showers shall be provided for classes in physical education, at grades 9 and above. An automatically controlled hot water supply of 100 to 120 degrees Fahrenheit shall be provided. Showers with cold water only shall not be permitted.

(b) Drying areas, if provided, shall be adjacent to the showers and adjacent to locker rooms. Shower and drying areas shall have water impervious nonskid floors. Walls shall be water impervious up to showerhead heights. Upper walls and ceiling shall be of smooth, easily washable construction.

(c) Locker and/or dressing room floors shall have a water impervious surface. Walls shall have a washable surface. In new construction, floor drains shall be provided in locker and dressing areas.

(d) If towels are supplied by the school, they shall be for individual use only and shall be laundered after each use.

[Statutory Authority: RCW 43.20.050. 92-02-019 (Order 225B), § 246-366-060, filed 12/23/91, effective 1/23/92; 91-02-051 (Order 124B), recodified as § 246-366-060, filed 12/27/90, effective 1/31/91; 82-07-015 (Order 225), § 248-64-270, filed 3/9/82; 79-08-078 (Order 183), § 248-64-270, filed 7/26/79; Order 124, § 248-64-270, filed 3/18/76; Order 55, § 248-64-270, filed 6/8/71.]

WAC 246-366-070 Sewage disposal. All sewage and waste water from a school shall be drained to a sewerage disposal system which is approved by the jurisdictional agency. On-site sewage disposal systems shall be designed, constructed and maintained in accordance with chapters 246-272 and 173-240 WAC.

[Statutory Authority: RCW 43.20.050. 92-02-019 (Order 225B), § 246-366-070, filed 12/23/91, effective 1/23/92; 91-02-051 (Order 124B), recodified as § 246-366-070, filed 12/27/90, effective 1/31/91; 82-07-015 (Order 225), § 248-64-280, filed 3/9/82; Order 55, § 248-64-280, filed 6/8/71.]

WAC 246-366-080 Ventilation. (1) All rooms used by students or staff shall be kept reasonably free of all objectionable odor, excessive heat or condensation.

(2) All sources producing air contaminants of public health importance shall be controlled by the provision and maintenance of local mechanical exhaust ventilation systems as approved by the health officer.

[Statutory Authority: RCW 43.20.050. 91-02-051 (Order 124B), recodified as § 246-366-080, filed 12/27/90, effective 1/31/91; 80-03-044 (Order 192), § 248-64-290, filed 2/20/80; 79-08-078 (Order 183), § 248-64-290, filed 7/26/79; Order 124, § 248-64-290, filed 3/18/76; Order 88, § 248-64-290, filed 10/3/73; Order 75, § 248-64-290, filed 7/11/72; Order 55, § 248-64-290, filed 6/8/71.]

WAC 246-366-090 Heating. The entire facility inhabited by students and employees shall be heated during school hours to maintain a minimum temperature of 65 degrees Fahrenheit except for gymnasiums which shall be maintained at a minimum temperature of 60 degrees Fahrenheit.

[Statutory Authority: RCW 43.20.050. 91-02-051 (Order 124B), recodified as § 246-366-090, filed 12/27/90, effective 1/31/91; 82-07-015 (Order 225), § 248-64-300, filed 3/9/82; Order 55, § 248-64-300, filed 6/8/71.]

WAC 246-366-100 Temperature control. Heating, ventilating and/or air conditioning systems shall be equipped with automatic room temperature controls.

[Statutory Authority: RCW 43.20.050. 91-02-051 (Order 124B), recodified as § 246-366-100, filed 12/27/90, effective 1/31/91; 82-07-015 (Order 225), § 248-64-310, filed 3/9/82; Order 55, § 248-64-310, filed 6/8/71.]

WAC 246-366-110 Sound control. (1) In new construction, plans submitted under WAC 246-366-040 shall specify ventilation equipment and other mechanical noise sources in classrooms are designed to provide background sound which conforms to a noise criterion curve or equivalent not to exceed NC-35. The owner shall certify equipment and features are installed according to the approved plans.

(2) In new construction, the actual background noise at any student location within the classroom shall not exceed 45 dBA (Leg_x) and 70 dB (Leq_x) (unweighted scale) where $_x$ is thirty seconds or more. The health officer shall determine compliance with this section when the ventilation system and the ventilation system's noise generating components, e.g., condenser, heat pump, etc., are in operation.

(3) Existing portable classrooms, constructed before January 1, 1990, moved from one site to another on the same school property or within the same school district are exempt from the requirements of this section if the portable classrooms meet the following:

(a) Noise abating or noise generating features shall not be altered in a manner that may increase noise levels;

(b) The portable classrooms were previously in use for general instruction;

(c) Ownership of the portable classrooms will remain the same; and

(d) The new site is in compliance with WAC 246-366-030(3).

(4) In new construction, the maximum ambient noise level in industrial arts, vocational agriculture and trade, and industrial classrooms shall not exceed 65 dBA when all fume and dust exhaust systems are operating.

(5) The maximum noise exposure for students in vocational education and music areas shall not exceed the levels specified in Table 1.

TABLE 1
MAXIMUM NOISE EXPOSURES PERMISSIBLE

Duration per day (hours)	Sound Level (dBA)
8 hours	85
6 hours	87
4 hours	90
3 hours	92
2 hours	95
1-1/2 hours	97
1 hour	100
1/2 hour	105
1/4 hour	110

Students shall not be exposed to sound levels equal to or greater than 115 dBA.

(6) Should the total noise exposure in vocational education and music areas exceed the levels specified in Table 1 of subsection (5) of this section, hearing protectors, e.g., ear plugs, muffs, etc., shall be provided to and used by the

exposed students. Hearing protectors shall reduce student noise exposure to comply with the levels specified in Table 1 of subsection (5) of this section.

[Statutory Authority: RCW 43.20.050. 92-02-019 (Order 225B), § 246-366-110, filed 12/23/91, effective 1/23/92; 91-02-051 (Order 124B), recodified as § 246-366-110, filed 12/27/90, effective 1/31/91; 89-20-026 (Order 333), § 248-64-320, filed 9/28/89, effective 10/29/89; Order 124, § 248-64-320, filed 3/18/76; Order 88, § 248-64-320, filed 10/3/73; Order 55, § 248-64-320, filed 6/8/71.]

WAC 246-366-120 Lighting. (1) The following maintained light intensities shall be provided as measured 30 inches above the floor or on working or teaching surfaces. General, task and/or natural lighting may be used to maintain the minimum lighting intensities.

	Minimum Foot - candle Intensity
General instructional areas including: Study halls, lecture rooms and libraries.	30
Special instructional areas where safety is of prime consideration or fine detail work is done including: Sewing rooms, laboratories (includes chemical storage areas), shops, drafting rooms and art and craft rooms.	50
Kitchen areas including: Food storage and preparation rooms.	30
Noninstructional areas including: Auditoriums, lunch rooms, assembly rooms, corridors, stairs, storerooms, and toilet rooms.	10
Gymnasiums: Main and auxiliary spaces, shower rooms and locker rooms.	20

(2) Excessive brightness and glare shall be controlled in all instructional areas. Surface contrasts and direct or indirect glare shall not cause excessive eye accommodation or eye strain problems.

(3) Lighting shall be provided in a manner which minimizes shadows and other lighting deficiencies on work and teaching surfaces.

[Statutory Authority: RCW 43.20.050. 91-02-051 (Order 124B), recodified as § 246-366-120, filed 12/27/90, effective 1/31/91; 82-07-015 (Order 225), § 248-64-330, filed 3/9/82; Order 124, § 248-64-330, filed 3/18/76; Order 55, § 248-64-330, filed 6/8/71.]

WAC 246-366-130 Food handling. (1) Food storage, preparation, and service facilities shall be constructed and maintained and operated in accordance with chapters 246-215 and 246-217 WAC.

(2) When central kitchens are used, food shall be transported in tightly covered containers. Only closed vehicles shall be used in transporting foods from central kitchens to other schools.

[Statutory Authority: RCW 43.20.050. 92-02-019 (Order 225B), § 246-366-130, filed 12/23/91, effective 1/23/92; 91-02-051 (Order 124B), recodified as § 246-366-130, filed 12/27/90, effective 1/31/91; Order 55, § 248-64-340, filed 6/8/71.]

WAC 246-366-140 Safety. (1) The existence of unsafe conditions which present a potential hazard to occupants of the school are in violation of these regulations. The secretary in cooperation with the state superintendent of public instruction shall review potentially hazardous conditions in schools which are in violation of good safety practice, especially in laboratories, industrial arts and vocational instructional areas. They shall jointly prepare a guide for use by department personnel during routine school inspections in identifying violations of good safety practices. The guide should also include recommendations for safe facilities and safety practices.

(2) In new construction, chemistry laboratories shall be provided with an eyewash fountain and a shower head for flushing in cases of chemical spill and clothing fires. If more than one laboratory is provided, one of each fixture will be adequate if the laboratories are in close proximity.

[Statutory Authority: RCW 43.20.050. 91-02-051 (Order 124B), recodified as § 246-366-140, filed 12/27/90, effective 1/31/91; Order 55, § 248-64-350, filed 6/8/71.]

WAC 246-366-150 Exemption. The board of health may, at its discretion, exempt a school from complying with parts of these regulations when it has been found after thorough investigation and consideration that such exemption may be made in an individual case without placing the health or safety of the students or staff of the school in danger and that strict enforcement of the regulation would create an undue hardship upon the school.

[Statutory Authority: RCW 43.20.050. 91-02-051 (Order 124B), recodified as § 246-366-150, filed 12/27/90, effective 1/31/91; 82-07-015 (Order 225), § 248-64-360, filed 3/9/82; Order 55, § 248-64-360, filed 6/8/71.]

Chapter 246-374 WAC
OUTDOOR MUSIC FESTIVALS

WAC

246-374-001 Purpose.
246-374-010 Definitions.
246-374-030 Submission of plans.
246-374-040 Site.
246-374-070 Toilet facilities.
246-374-090 Insect and rodent control.
246-374-110 Dust control.
246-374-120 Lighting.
246-374-140 General.

DISPOSITION OF SECTIONS FORMERLY CODIFIED IN THIS CHAPTER

246-374-050 Water supply. [Statutory Authority: RCW 43.20.050 and 70.108.040. 92-02-019 (Order 225B), § 246-374-050, filed 12/23/91, effective 1/23/92. Statutory Authority: RCW 43.20.050. 91-02-051 (Order 124B), recodified as § 246-374-050, filed 12/27/90, effective 1/31/91; Order 59, § 248-73-050, filed 8/16/71.] Repealed by 97-20-100, filed 9/29/97, effective 10/30/97. Statutory Authority: RCW 43.20.050.

246-374-060 Sewage disposal. [Statutory Authority: RCW 43.20.050 and 70.108.040. 92-02-019 (Order 225B), § 246-374-060, filed 12/23/91, effective 1/23/92. Statutory Authority: RCW 43.20.050. 91-02-051 (Order 124B), recodified as § 246-374-060, filed 12/27/90, effective 1/31/91; Order 59, § 248-73-060, filed 8/16/71.] Repealed by 97-20-100, filed 9/29/97, effective 10/30/97. Statutory Authority: RCW 43.20.050.

246-374-080 Solid waste. [Statutory Authority: RCW 43.20.050 and 70.108.040. 92-02-019 (Order 225B), § 246-374-080, filed 12/23/91, effective 1/23/92. Statutory Authority: RCW 43.20.050. 91-02-051 (Order 124B), recodified as § 246-374-080, filed 12/27/90, effective 1/31/91; Order 59, § 248-73-080, filed 8/16/71.] Repealed by 97-20-100, filed 9/29/97, effective 10/30/97. Statutory Authority: RCW 43.20.050.

246-374-100	Food service. [Statutory Authority: RCW 43.20.050 and 70.108.040. 92-02-019 (Order 225B), § 246-374-100, filed 12/23/91, effective 1/23/92. Statutory Authority: RCW 43.20.050. 91-02-051 (Order 124B), recodified as § 246-374-100, filed 12/27/90, effective 1/31/91; Order 59, § 248-73-100, filed 8/16/71.] Repealed by 97-20-100, filed 9/29/97, effective 10/30/97. Statutory Authority: RCW 43.20.050.
246-374-130	Bathing areas. [Statutory Authority: RCW 43.20.050 and 70.108.040. 92-02-019 (Order 225B), § 246-374-130, filed 12/23/91, effective 1/23/92. Statutory Authority: RCW 43.20.050. 91-02-051 (Order 124B), recodified as § 246-374-130, filed 12/27/90, effective 1/31/91; Order 59, § 248-73-130, filed 8/16/71.] Repealed by 97-20-100, filed 9/29/97, effective 10/30/97. Statutory Authority: RCW 43.20.050.

WAC 246-374-001 Purpose. The following rules and regulations are established as the minimum sanitation requirements for outdoor music festivals, in accordance with chapter 302, Laws of 1971 ex. sess.

[Statutory Authority: RCW 43.20.050. 91-02-051 (Order 124B), recodified as § 246-374-001, filed 12/27/90, effective 1/31/91; Order 59, § 248-73-010, filed 8/16/71.]

WAC 246-374-010 Definitions. (1) "Outdoor music festival" or "music festival" or "festival" means an assembly of persons gathered primarily for outdoor, live, or recorded music entertainment, where the predicted attendance is 2,000 or more and where the duration of the program is five hours or longer: Provided, That this definition shall not be applied to any regularly established permanent place of worship, athletic stadium, athletic field, arena, auditorium, coliseum, or other similar permanently established places of assemblies which do not exceed by more than 250 people the maximum seating capacity of the structure where the assembly is held: Provided further, That this definition shall not apply to government sponsored fairs held on regularly established fairgrounds nor to assemblies required to be licensed under other laws or regulations of the state.

(2) "Local health officer" means the legally qualified physician who has been appointed as the health officer of the city, town, county or district public health department as defined in RCW 70.05.010(2), or his authorized representative.

(3) "Applicant" means the promoter who has the right of control of the conduct of an outdoor music festival who applies to the appropriate legislative authority for a license to hold an outdoor music festival.

(4) "Issuing authority" means the legislative body of the local governmental unit where the site for an outdoor music festival is located.

[Statutory Authority: RCW 43.20.050. 91-02-051 (Order 124B), recodified as § 246-374-010, filed 12/27/90, effective 1/31/91; Order 59, § 248-73-020, filed 8/16/71.]

WAC 246-374-030 Submission of plans. The applicant shall submit plans for site and development to the local health officer not less than thirty days prior to the time the applicant must file his application with the issuing authority. The plan shall include the name of the festival, its physical location, dates of operation, the name, address and phone number of the applicant, a list of other individuals responsible for all phases of construction and operation, and shall include the following information:

(1) Projected attendance at the outdoor music festival.

(a) Maximum day attendance.

(b) Maximum overnight attendance.

(c) Total attendance for the duration of the festival.

(2) Site characteristics:

(a) The area, dimensions, legal description and ownership of the tract of land.

(b) Physical characteristics of the site, including but not limited to bodies of water, existing structures, topographical data, current land use of site and contiguous property.

(c) Location, and the width of all offsite access roads and onsite service roads.

(d) Location of facilities including parking, camping sites, food concessions, medical services, entertainment area, water source and distribution system, sewage disposal, solid waste collection and disposal, bathing areas, communication facilities and administrative accommodations.

(3) Method and design of water supply and distribution system.

(4) Method and design of sewage and waste water collection and disposal systems.

(5) Method and design of toilet facilities, their number and location.

(6) Method of solid waste collection and disposal, including number and location of containers.

(7) Method of insect and rodent control.

(8) Design of food service facilities and information including source, storage, preparation and types of foods.

(9) Design and location of all facilities providing shelter including overnight accommodations for festival patrons.

(10) Method of dust control.

(11) Plan of electrical service, including type, location and number of lighting fixtures, communications facilities and electrical outlets.

(12) Description of bathing areas and facilities.

(13) Transportation and facilities for emergency medical service.

No later than fifteen days after the submission of plans for site and development, the local health officer shall either approve or disapprove such plans. Any disapproval shall set forth in detail the specific grounds therefor. The applicant shall have an opportunity to correct the deficiencies as described by the local health officer and to resubmit plans for local health officer approval. Final approval or disapproval shall be given by the local health officer on or before the date set for submission of application to the issuing authority. The local health officer shall accompany any final disapproval with written reasons therefor.

[Statutory Authority: RCW 43.20.050. 91-02-051 (Order 124B), recodified as § 246-374-030, filed 12/27/90, effective 1/31/91; Order 59, § 248-73-030, filed 8/16/71.]

WAC 246-374-040 Site. The festival site shall be well drained, located and maintained so as not to create a health or safety hazard or nuisance.

[Statutory Authority: RCW 43.20.050. 91-02-051 (Order 124B), recodified as § 246-374-040, filed 12/27/90, effective 1/31/91; Order 59, § 248-73-040, filed 8/16/71.]

WAC 246-374-070 Toilet facilities. (1) There shall be provided separate toilet facilities for each sex. Such toilets

shall consist of adequately designed and maintained privies, chemical toilets or other facilities for the collection and disposal of human wastes, as may be approved by the local health officer.

(2) A minimum number of three toilets for each sex shall be provided for the first five hundred patrons and one additional toilet for each sex shall be provided for each additional five hundred patrons or major fraction thereof. The total number of toilets shall be based on the projected maximum daily attendance.

(3) Toilet facilities shall be located within 300 feet of all portions of all day use and overnight camping areas. In addition, there shall be toilets immediately adjacent to food concessions, medical service and administrative areas.

(4) Toilet facilities shall be constructed in a manner to provide privacy and to facilitate cleaning and maintenance. Toilets shall be kept clean and free of insects, rodents and excessive odors.

(5) An adequate quantity of toilet paper shall be provided.

[Statutory Authority: RCW 43.20.050. 91-02-051 (Order 124B), recodified as § 246-374-070, filed 12/27/90, effective 1/31/91; Order 59, § 248-73-070, filed 8/16/71.]

WAC 246-374-090 Insect and rodent control. Appropriate measures shall be taken to control rodents and insects.

[Statutory Authority: RCW 43.20.050. 91-02-051 (Order 124B), recodified as § 246-374-090, filed 12/27/90, effective 1/31/91; Order 59, § 248-73-090, filed 8/16/71.]

WAC 246-374-110 Dust control. Appropriate measures shall be taken to control dust. Special control measures such as watering, oiling, sawdust or application of other soil stabilizers shall be made at food concessions, and medical service facilities.

[Statutory Authority: RCW 43.20.050. 91-02-051 (Order 124B), recodified as § 246-374-110, filed 12/27/90, effective 1/31/91; Order 59, § 248-73-110, filed 8/16/71.]

WAC 246-374-120 Lighting. (1) Outside lighting shall be provided for spectator and parking areas, toilet facilities, food concessions, medical service facilities and walkways.

(2) Light measured on working surfaces inside medical service facilities and food concessions shall be at least 20 foot candles.

[Statutory Authority: RCW 43.20.050. 91-02-051 (Order 124B), recodified as § 246-374-120, filed 12/27/90, effective 1/31/91; Order 59, § 248-73-120, filed 8/16/71.]

WAC 246-374-140 General. (1) The applicant or his designated agent shall familiarize himself with these regulations and shall maintain the festival site and facilities in a clean and sanitary condition. The applicant or his designated agent shall be on the site at all times and shall be responsible for the operation of the festival and compliance with these rules and regulations.

(2) When, in the opinion of the local health officer, a hazard to health exists, or is developing, before, during or after the festival, that is not contemplated in these regulations, he may direct the applicant or his designated agent to take appropriate action to remedy the situation.

(3) The local health officer, in his discretion and with the concurrence of the assistant secretary, Washington state division of health services, department of social and health services, may waive, modify, or approve reasonable alternatives to any of the requirements of these regulations.

[Statutory Authority: RCW 43.20.050. 91-02-051 (Order 124B), recodified as § 246-374-140, filed 12/27/90, effective 1/31/91; Order 59, § 248-73-140, filed 8/16/71.]

Chapter 246-376 WAC
CAMPS

WAC

246-376-001	Legal authority of the state board of health.
246-376-010	Definitions.
246-376-020	Registration.
246-376-030	Location or site.
246-376-040	Supervision.
246-376-060	Toilets and handwashing facilities.
246-376-070	Showers and laundry facilities in resident camps.
246-376-090	Sleeping and living quarters.
246-376-120	General.
246-376-130	Responsibility.

DISPOSITION OF SECTIONS FORMERLY CODIFIED IN THIS CHAPTER

246-376-050	Water supply. [Statutory Authority: RCW 43.20.050. 91-02-051 (Order 124B), recodified as § 246-376-050, filed 12/27/90, effective 1/31/91; Order 140, § 248-72-040, filed 2/7/77; Regulation 72.040, effective 3/11/60.] Repealed by 97-20-100, filed 9/29/97, effective 10/30/97. Statutory Authority: RCW 43.20.050.
246-376-080	Sewage and liquid waste disposal. [Statutory Authority: RCW 43.20.050. 91-02-051 (Order 124B), recodified as § 246-376-080, filed 12/27/90, effective 1/31/91; Order 140, § 248-72-070, filed 2/7/77; Regulation 72.070, effective 3/11/60.] Repealed by 97-20-100, filed 9/29/97, effective 10/30/97. Statutory Authority: RCW 43.20.050.
246-376-100	Food handling. [Statutory Authority: RCW 43.20.050. 92-02-019 (Order 225B), § 246-376-100, filed 12/23/91, effective 1/23/92; 91-02-051 (Order 124B), recodified as § 246-376-100, filed 12/27/90, effective 1/31/91; Order 140, § 248-72-090, filed 2/7/77; Regulation 72.090, effective 3/11/60.] Repealed by 97-20-100, filed 9/29/97, effective 10/30/97. Statutory Authority: RCW 43.20.050.
246-376-110	Swimming pools, wading pools, and bathing beaches. [Statutory Authority: RCW 43.20.050. 92-02-019 (Order 225B), § 246-376-110, filed 12/23/91, effective 1/23/92; 91-02-051 (Order 124B), recodified as § 246-376-110, filed 12/27/90, effective 1/31/91; Order 140, § 248-72-110, filed 2/7/77; Regulation 72.110, effective 3/11/60.] Repealed by 97-20-100, filed 9/29/97, effective 10/30/97. Statutory Authority: RCW 43.20.050.

WAC 246-376-001 Legal authority of the state board of health. RCW 43.20.050.

[Statutory Authority: RCW 43.20.050. 91-02-051 (Order 124B), recodified as § 246-376-001, filed 12/27/90, effective 1/31/91; Order 140, § 248-72-999, filed 2/7/77.]

WAC 246-376-010 Definitions. The following definitions shall apply in the interpretations and the enforcement of these rules and regulations.

(1) The term "camp" as used herein shall refer only to an established group camp which is established or maintained for recreation, education, vacation, or religious purposes for use by organized groups and wherein these activities are conducted on a closely supervised basis and wherein day to day

living facilities, including food and lodging, are provided either free of charge or by payment of a fee.

(2) "Owner" shall mean any person or persons, organization, association, corporation, or agency of federal, state, county or municipal government, operating, maintaining or offering for use within the state of Washington any camp either free of charge or by payment of a fee.

(3) "Director" shall mean the person in charge of the camp program.

(4) "Existing camp" shall mean a camp which was established prior to the date of adoption of these rules and regulations.

(5) "New camp" shall mean a camp which is established after the date of adoption of these rules and regulations.

(6) "Health officer" shall mean the state director of health, or the city, county, or district health officer, as defined in RCW 70.05.010(2) or his or her authorized representatives.

[Statutory Authority: RCW 43.20.050. 91-02-051 (Order 124B), recodified as § 246-376-010, filed 12/27/90, effective 1/31/91; Order 140, § 248-72-001, filed 2/7/77; Regulation 72.001, effective 3/11/60.]

WAC 246-376-020 Registration. Every owner shall make an annual application to the health officer for the registration of his camp at least 30 days prior to the day it is to be opened for use.

Every application for registration made pursuant to these regulations shall be on a form to be supplied by the health officer and the applicant shall furnish all information required by the health officer.

[Statutory Authority: RCW 43.20.050. 91-02-051 (Order 124B), recodified as § 246-376-020, filed 12/27/90, effective 1/31/91; Order 140, § 248-72-010, filed 2/7/77; Regulation 72.010, effective 3/11/60.]

WAC 246-376-030 Location or site. (1) All camps shall be located on land that provides good natural drainage. The site shall not be subject to flooding or located adjacent to swamps or marshes which might have an adverse effect on the health of the occupants.

(2) No camp shall be so located as to endanger any public or private water supply or the health of the public or health of the occupants.

(3) Where corrals or stables exist, or where large animals are maintained in connection with any camp, the quarters for any animals shall be located so as not to create a nuisance or health hazard.

[Statutory Authority: RCW 43.20.050. 91-02-051 (Order 124B), recodified as § 246-376-030, filed 12/27/90, effective 1/31/91; Order 140, § 248-72-020, filed 2/7/77; Regulation 72.020, effective 3/11/60.]

WAC 246-376-040 Supervision. (1) All camps shall be under the supervision of an adult having mature judgment and ability to understand and apply state laws and regulations relating to operation and maintenance of the camp.

(2) The director, or a responsible person reporting to him, shall make or have made frequent inspections of the premises and sanitary equipment for the purpose of maintaining proper sanitation and compliance with these regulations.

(3) The director shall maintain all sanitary facilities, and other equipment of camps, in good repair and appearance.

(4) The supervision and equipment shall be sufficient to prevent littering of the premises with rubbish, garbage, or other wastes and to maintain general cleanliness. Fly-tight metal garbage containers shall be provided for the collection of garbage. These containers shall not be permitted to become foul smelling, unsightly, or breeding places for flies, and the contents shall be disposed of by incineration or some other method approved by the health officer.

(5) All toilet rooms, eating, sleeping and other living facilities shall be cleaned at least daily.

(6) The owner or director of every camp shall maintain the buildings and grounds free from flies, mosquitoes and other insects through the use of screens and/or approved sprays or other effective means.

All premises shall be kept free from rats, mice and other rodents.

(7) Where bedding is furnished it shall be kept clean and aired at least once a week. Where sheets and pillow cases are furnished they shall be freshly laundered at least for each new user.

Mattress covers to completely cover the mattress shall be provided and shall be freshly laundered at least for each new user.

[Statutory Authority: RCW 43.20.050. 91-02-051 (Order 124B), recodified as § 246-376-040, filed 12/27/90, effective 1/31/91; Order 140, § 248-72-030, filed 2/7/77; Regulation 72.030, effective 3/11/60.]

WAC 246-376-060 Toilets and handwashing facilities. (1) Every camp shall be provided with toilets, urinals and handwashing facilities conveniently located.

(2) Separate toilet facilities shall be provided for each sex and shall be so marked.

(3) Only water flushed toilets will be allowed unless specific exception is made by the health officer for the use of fly-tight sanitary privies.

(4) The minimum number of the above facilities to be provided shall be in accordance with the following schedules:

Girls' water closets -
First 100 girls - 1 for each 10 girls
Over 100 girls - 10 for first 100 girls plus
1 for each additional 20 girls

Boys' water closets -
First 100 boys - 1 for each 20 boys
Over 100 boys - 5 for first 100 boys plus
1 for each additional 40 boys

Boys' urinals -
First 100 boys - 1 for each 20 boys
Over 100 boys - 5 for first 100 boys plus
1 for each additional 40 boys

Lavatories -
First 100 users - 1 for each 12 users
Over 100 users - 8 for first 100 users plus
1 for each additional 20 users

(5) Toilet paper shall be provided in each water closet compartment or privy.

(6) All toilet rooms and privies shall be constructed of material permitting satisfactory cleaning and shall be well lighted and ventilated. All toilet fixtures shall be of easily cleanable, impervious material and in good repair.

(7) Toilet room floors shall be constructed of concrete or other water impervious material pitched to provide adequate drainage to a suitable located trapped floor drain; except that urinal stalls may be used in lieu of floor drains. If partitions are provided between flush bowls they shall be raised 12 inches from the floor and shall be so constructed as to be easily cleanable.

(8) Where users do not provide their own individual towel and soap, single-service paper or cloth towels and soap shall be provided at all lavatories. The use of common towels is prohibited.

[Statutory Authority: RCW 43.20.050. 91-02-051 (Order 124B), recodified as § 246-376-060, filed 12/27/90, effective 1/31/91; Order 140, § 248-72-050, filed 2/7/77; Regulation 72.050, effective 3/11/60.]

WAC 246-376-070 Showers and laundry facilities in resident camps. Adequate and conveniently located bathing facilities including hot and cold or tempered water shall be provided. Separate shower rooms shall be provided for each sex in the ratio of one shower head or tub for each 15 users based upon the maximum demand at any one period.

One laundry tray or wash tub should be provided for each 40 persons or major fraction thereof.

The floors of shower rooms shall be constructed of concrete or other easily cleanable, water impervious material graded to drain to a suitable trapped floor drain. They should be free from cracks or uneven surfaces that interfere with proper cleaning.

The shower rooms shall be well lighted and ventilated and have interior surfaces of light colored, washable material.

[Statutory Authority: RCW 43.20.050. 91-02-051 (Order 124B), recodified as § 246-376-070, filed 12/27/90, effective 1/31/91; Order 140, § 248-72-060, filed 2/7/77; Regulation 72.060, effective 3/11/60.]

WAC 246-376-090 Sleeping and living quarters. (1) All sleeping and living quarters shall be ventilated so as to be maintained free from objectionable odors. They shall be provided with adequate natural and artificial light. The floors, walls, and ceilings of sleeping rooms shall be of easily cleanable construction and shall be maintained in a clean, sanitary condition.

(2) The floors of all buildings which are not built on solid concrete or rat-proof foundations shall be raised at least 12 inches above the ground and the space underneath the floor kept free from trash, rubbish, or other material attractive to insects or rodents.

(3) No room used for sleeping purposes shall have less than 400 cubic feet of air space for each occupant.

(4) All cabin or dormitory type sleeping rooms shall contain a minimum floor space of 40 sq. ft. per occupant. Ventilation shall be provided to all bedrooms or dormitories equivalent to an outside opening of 2-1/2 sq. ft. per person.

[Statutory Authority: RCW 43.20.050. 91-02-051 (Order 124B), recodified as § 246-376-090, filed 12/27/90, effective 1/31/91; Order 140, § 248-72-080, filed 2/7/77; Regulation 72.080, effective 3/11/60.]

WAC 246-376-120 General. (1) Where no provision is made in these regulations to clearly apply to any condition or thing found to exist which may be a health hazard in a camp, the health officer may direct the owner as to the best means to adopt to secure proper sanitary conditions in said camp.

(2) Where a condition exists, which in the opinion of the health officer is a violation of these regulations or a menace to health, he may order the owner to close such camp until such time as the health officer may direct.

[Statutory Authority: RCW 43.20.050. 91-02-051 (Order 124B), recodified as § 246-376-120, filed 12/27/90, effective 1/31/91; Order 140, § 248-72-120, filed 2/7/77; Regulation 72.120, effective 3/11/60.]

WAC 246-376-130 Responsibility. The owner of a camp shall be responsible for full compliance with these rules and regulations.

[Statutory Authority: RCW 43.20.050. 91-02-051 (Order 124B), recodified as § 246-376-130, filed 12/27/90, effective 1/31/91; Order 140, § 248-72-130, filed 2/7/77; Regulation 72.130, effective 3/11/60.]

Chapter 246-380 WAC
STATE INSTITUTIONAL SURVEY PROGRAM

WAC

246-380-001 Purpose.
246-380-990 Fees.

WAC 246-380-001 Purpose. The purpose of this chapter is to specify the fees required to conduct the health and sanitation inspections in state institutions as mandated in RCW 43.70.130(8).

[Statutory Authority: RCW 43.20B.020. 91-21-075 (Order 204), § 246-380-001, filed 10/18/91, effective 11/18/91.]

WAC 246-380-990 Fees. An annual health and sanitation survey fee for community colleges, ferries, and other state of Washington institutions and facilities shall be assessed as follows:

		Fee
(1) Food Service		
(a)	As defined in WAC 246-215-011(12) food service establishments or concessions in community colleges, ferries, or any other state of Washington facility preparing potentially hazardous foods. This shall include dockside food establishments directly providing food for the Washington state ferry system.	$603.30
(b)	Food service establishments or concessions that do not prepare potentially hazardous foods.	$302.60
(c)	The health and sanitation survey fee referenced in subsection (a) and (b) of this section may be waived provided there is an agreement between the department of health and the local jurisdictional health agency for the local health agency to conduct the food service establishments surveys.	

	Fee
(2) State institutions or facilities.	
(a) Institutions or facilities operating a food service: The annual fee shall be nine dollars and fifty cents times the population count plus six hundred three dollars and thirty cents. The population count shall mean the average daily population for the past twelve months (January through December).	
(b) Institutions or facilities that do not operate a food service: The annual fee shall be nine dollars and fifty cents times the population count.	
(c) The population count for a new institution shall mean the average projected daily population for the first twelve months of operation.	

[Statutory Authority: RCW 43.70.250. 06-21-108, § 246-380-990, filed 10/17/06, effective 11/17/06; 05-13-189, § 246-380-990, filed 6/22/05, effective 7/23/05. Statutory Authority: RCW 43.70.250 and 70.38.105(5). 03-22-020, § 246-380-990, filed 10/27/03, effective 11/27/03. Statutory Authority: RCW 43.70.250 and 2002 c 371. 02-20-040, § 246-380-990, filed 9/24/02, effective 11/1/02. Statutory Authority: RCW 43.20B.020. 91-21-075 (Order 204), § 246-380-990, filed 10/18/91, effective 11/18/91. Statutory Authority: RCW 43.70.040. 91-02-049 (Order 121), recodified as § 246-380-990, filed 12/27/90, effective 1/31/91. Statutory Authority: RCW 43.20A.055. 87-14-066 (Order 2493), § 440-44-076, filed 7/1/87; 85-13-007 (Order 2238), § 440-44-076, filed 6/7/85.]

Chapter 246-390 WAC
DRINKING WATER CERTIFICATION RULES

WAC

246-390-001	Purpose—Objectives.
246-390-010	Definitions.
246-390-020	Requirement for certification.
246-390-030	Certification.
246-390-040	Provisional certification.
246-390-050	Revoking or denying certification.
246-390-060	Reciprocity.
246-390-070	Third-party certification.
246-390-100	Appeals.
246-390-990	Fees.

WAC 246-390-001 Purpose—Objectives. (1) The purpose of this chapter is to establish a state drinking water program for certification of laboratories analyzing public drinking water under RCW 43.20.050. The certification program is designed to satisfy the intent of the primacy agreement with United States Environmental Protection Agency and the state, in compliance with 40 C.F.R. 142.10, 7/1/90.

(2) The department certification program:

(a) Requires laboratories to demonstrate capability to accurately analyze drinking water samples;

(b) Aids laboratories in improving quality assurance;

(c) Offers technical assistance in all drinking water analyses; and

(d) Fosters cooperation between the state department of health, local health agencies, and operators of laboratories.

[Statutory Authority: RCW 43.20.050. 92-15-152 (Order 290B), § 246-390-001, filed 7/22/92, effective 8/22/92.]

WAC 246-390-010 Definitions. Definitions in this section shall apply throughout this chapter, unless clearly indicated otherwise.

(1) "Administrative Procedure Act" means the adjudicative proceedings governed by chapter 34.05 RCW and chapter 246-08 WAC.

(2) "Analytical data" means the recorded qualitative and/or quantitative results of a chemical, physical, biological, microbiological, or radiological determination.

(3) "Certification" means the formal contractual agreement between the department and the certified laboratory indicating a laboratory is capable of producing accurate analytical data and is authorized to test drinking water compliance samples. The department will issue a certificate to the laboratory indicating the contaminants the laboratory is authorized to analyze. Certification does not guarantee validity of analytical data submitted by a certified laboratory.

(4) "Certification authority" means the designated official or a representative of the official authorized by the department as the head of the certification program.

(5) "Certification manual" means the most recent revision of the procedural and technical criteria of the drinking water certification rules. This document, entitled "Certification Manual for Laboratories Analyzing Washington State Drinking Water," is available from the Department of Health, Public Health Laboratory, Drinking Water Certification Program, 1610 NE 150th St., Seattle, Washington 98155-7224.

(6) "Certification official (CO)" means the designated official authorized by the department to certify drinking water laboratories.

(7) "Compliance sample" means a drinking water sample collected in accordance with WAC 246-290-300 and/or 246-290-320 and submitted to a state certified laboratory for analysis.

(8) "Department" means the Washington state department of health.

(9) "EMSL-CI" means the EPA Environmental Monitoring and Support Laboratory, Cincinnati, Ohio.

(10) "EMSL-LV" means the EPA Environmental Monitoring System Laboratory, Las Vegas, Nevada.

(11) "EPA" means United States Environmental Protection Agency.

(12) "Intercomparison studies" means a series of cross check samples sent to radiochemistry laboratories by EPA to compare the results between participating laboratories.

(13) "Laboratory" means any facility under the ownership and technical management of a single entity in a single geographical locale. A laboratory is where scientific examinations are performed on drinking water samples.

(14) "Maximum contaminant level (MCL)" means the maximum permissible level of a contaminant in water the purveyor delivers to any public water system user, measured at the location identified under WAC 246-290-300, Table 4.

(15) "Official methods" means methodologies specified by EPA drinking water regulations under 40 C.F.R. 141.21 - 141.30, 141.41 - 141.42, 7/1/90 and approved by the department.

(16) "Parameter" means a single determination or group of related determinations using a specific written official method.

(17) "Performance evaluation (PE)" means an evaluation of the results of analysis of samples from an external testing source whose true values are unknown to the laboratory conducting the analysis. The external testing service must be approved by the department and/or CO if other than EPA sources are used.

(18) "On-site audit" means an on-site inspection performed by the department to determine a laboratory's capabilities and facilities.

(19) "Quality assurance (QA)" means all those planned and systematic actions necessary to provide confidence that an analysis, measurement, or surveillance program produces data of known and defensible quality.

(20) "Quality controls (QC)" means internal written procedures and routine analyses of laboratory reference materials, samples, and blanks to insure precision and accuracy of methodology, equipment and results.

(21) "State advisory level (SAL)" means a department-established value for a chemical without an existing MCL. The SAL represents a level which when exceeded, indicates the need for further assessment to determine if the chemical is an actual or potential threat to human health.

[Statutory Authority: RCW 43.20.050. 92-15-152 (Order 290B), § 246-390-010, filed 7/22/92, effective 8/22/92.]

WAC 246-390-020 Requirement for certification. (1) Certification officers are required to meet EPA requirements for drinking water certification as described in the latest version of the *Manual for the Certification of Laboratories Analyzing Drinking Water, EPA/570/9-90/008,4/90*.

(2) Applicants for laboratory certification shall submit to the department:

(a) An application fee as specified in WAC 246-390-990;

(b) A written application which includes one of the following:

(i) A request for first-time certification;

(ii) A request for certification to analyze additional or newly regulated contaminants; or

(iii) A request to reapply for certification after correction of deficiencies which resulted in the downgrading or revocation of certification status, or after lapse of previous contract; and

(c) A QA plan as specified in subsection (6) of this section.

(3) Applicants for routine renewal shall submit to the department at least three months before expiration of the contract:

(a) A renewal fee as specified in WAC 246-390-990;

(b) A written application which includes:

(i) Name and address of each laboratory or testing site;

(ii) Owner's name, address, and contact person;

(iii) List of parameters to be certified;

(iv) Completed personnel training and experience forms;

(v) List of methods used;

(vi) Copy of QA manual; and

(vii) List of equipment;

(c) Verification of the successful performance of PE studies as specified in subsection (4) of this section; and

(d) A QA plan, if changes have been made since the plan was last submitted to the department.

(4) Laboratory approved personnel shall participate in EPA Water Supply, EMSL-CI, EMSL-LV, or other department approved PE studies at least once annually for microbiological and twice annually for chemistry and radiochemistry laboratories as described in the certification manual. Radiochemistry laboratories must also participate in two intercomparison studies per year.

(5) Laboratory directors shall allow on-site audit by the CO as follows:

(a) At least every three years;

(b) Announced or unannounced;

(c) At contract renewal; or

(d) At the discretion of the CO.

(6) Laboratory directors shall submit a QA plan with a section specific to drinking water with initial application; at contract renewal, if changes have been made; or at the discretion of the CO. The QA plan or manual shall follow EPA and state requirements, as described in the certification manual.

(7) Laboratory personnel shall notify the CO in writing within thirty days of major changes to analytical staff management including:

(a) Moving facilities;

(b) Loss or replacement of the laboratory supervisor;

(c) A situation in which a trained and experienced analyst no longer is available to analyze a particular parameter for which certification had been granted;

(d) Loss or replacement of major equipment; and

(e) Any other situation described in the certification manual that would affect laboratory operations.

(8) Laboratories shall meet the following minimum workload requirements for each certified parameter:

(a) Microbiological laboratories to analyze a minimum of fifteen water samples per quarter that are positive for both total and fecal coliform.

(b) Chemistry and radiochemistry laboratories to analyze five water samples per quarter. These workload requirements shall not include PE samples. Laboratories must assure the CO that proper QA/QC was followed, and official drinking water methods were used. See certification manual for further explanation.

(9) Laboratory personnel shall follow official EPA methods, or EPA approved alternate analytical techniques, as described in the certification manual.

(10) Laboratory personnel shall accurately report analytical results of compliance samples in a timely manner as described in the certification manual using:

(a) The department specified format; and

(b) Electronic or hard copy transmission.

(11) Laboratories shall follow the standard of quality requirements as described in the certification manual.

[Statutory Authority: RCW 43.20.050. 92-15-152 (Order 290B), § 246-390-020, filed 7/22/92, effective 8/22/92.]

WAC 246-390-030 Certification. (1) The department may grant certification to a laboratory after conducting a complete assessment of the laboratory's capabilities, including:

(a) Submission of a completed application;

(b) Submission of the proper fees;

(c) Satisfactory performance on PE studies, and intercomparison samples where necessary;

(d) Submission of an updated QA plan; and

(e) Successful completion of an on-site inspection.

(2) The department may grant less than full certification based on terms and conditions incorporated in the contractual agreement between the laboratory and the department.

[Statutory Authority: RCW 43.20.050. 92-15-152 (Order 290B), § 246-390-030, filed 7/22/92, effective 8/22/92.]

WAC 246-390-040 Provisional certification. Laboratories which have deficiencies requiring corrective action but which can produce valid analytical data as determined by the CO may be given provisional certification. The department may downgrade a laboratory to provisional certification for failure to:

(1) Analyze a PE sample and/or an intercomparison sample, or any other unknown test sample within the acceptance limits established by the EPA and/or the department. Failure on a mandatory PE sample is defined as a failure on any concentration provided, unless otherwise specified by the EPA and/or the department. The laboratory shall be given an opportunity to request a make up PE or QC sample before the CO takes action.

(2) Notify the CO in writing within thirty days of major change impairing analytical capability, such as personnel, equipment, or location.

(3) Demonstrate that the laboratory maintains the required standard of quality, based upon an on-site evaluation. See certification manual for minimum standard of quality requirements.

(4) Promptly send reports of analysis to the department as described in the certification manual.

(5) Promptly notify the public water system by the end of the business day, or the department if the public water system can not be notified, of results exceeding MCL or SAL. For all results exceeding MCL or SAL the laboratory must notify the department as soon as possible.

[Statutory Authority: RCW 43.20.050. 92-15-152 (Order 290B), § 246-390-040, filed 7/22/92, effective 8/22/92.]

WAC 246-390-050 Revoking or denying certification. Action shall be taken consistent with the contract, with 40 C.F.R. 142.10 7/1/90, EPA Manual, RCW 43.20.050, and chapter 246-08 WAC. The department may immediately downgrade laboratories from certified or provisionally certified to not certified, or may deny certification for a particular contaminant analysis or group of contaminants, for the following reasons:

(1) Two consecutive failures to analyze a PE sample or intercomparison sample or any other unknown test sample for a particular contaminant within the acceptance limits established by EPA and/or the department. The laboratory shall be given an opportunity to request a make-up PE or QC sample before the CO takes final action. The decision to revoke certification shall be made at the discretion of the CO after examination of all information.

(2) Failure to demonstrate to the CO that the laboratory has corrected deficiencies identified during an on-site evaluation within:

(a) Three months to correct a procedural or administrative deficiency; and

(b) Six months to correct an equipment deficiency. If the equipment or instrument involved is the only instrument available for a particular analysis, certification may be downgraded immediately, at the discretion of the CO.

(3) Submission of a PE sample to another laboratory for analysis and reporting data as its own.

(4) Failure to use analytical methodology specified in the certification manual.

(5) Failure to submit an appropriate application and associated fees to the department.

(6) Failure to pass a re-audit and correct deficiencies if the laboratory is found deficient in its ability to provide accurate analytical data.

(7) Justifiable evidence of falsification of data or any other practice considered deceptive by the department.

(8) Failure to comply with other provisions of the contractual agreement between the department and the laboratory.

(9) Failure to correct deficiencies quoted in a revoked certificate before reapplying for certification.

(10) Failure to permit entry of a CO or CO's representative for an on-site audit to examine methods, facilities, equipment, and analytical data.

[Statutory Authority: RCW 43.20.050. 92-15-152 (Order 290B), § 246-390-050, filed 7/22/92, effective 8/22/92.]

WAC 246-390-060 Reciprocity. The department may recognize certification of an out-of-state laboratory by another primacy state with which the department has an established mutual reciprocity agreement. The laboratory shall submit an application and a fee as specified in WAC 246-390-990; perform approved PE studies; follow the workload requirements; and follow drinking water methods per WAC 246-390-020. A laboratory accepted under the reciprocity agreement shall enter into a contract with the department.

[Statutory Authority: RCW 43.20.050. 92-15-152 (Order 290B), § 246-390-060, filed 7/22/92, effective 8/22/92.]

WAC 246-390-070 Third-party certification. The department shall recognize only the certification officials authorized and approved by the department. See certification manual for recognized and approved certification officials. Laboratories requesting third party certification shall submit an application; perform approved PE studies; follow the workload requirements; and follow drinking water methods per WAC 246-390-020.

[Statutory Authority: RCW 43.20.050. 92-15-152 (Order 290B), § 246-390-070, filed 7/22/92, effective 8/22/92.]

WAC 246-390-100 Appeals. A laboratory manager may appeal any certification action such as denial and revocation in writing to the CO. If the question is not satisfactorily resolved, the laboratory manager may appeal in writing by certified mail to the certification authority within thirty days

of the decision of the CO. Decisions of the certification authority may be appealed to the secretary of the department within thirty days of notification of final action. The adjudication procedure is governed by the Administrative Procedure Act, this chapter, and chapter 246-08 WAC. Laboratories may be allowed to maintain certification during the appeal process.

[Statutory Authority: RCW 43.20.050. 92-15-152 (Order 290B), § 246-390-100, filed 7/22/92, effective 8/22/92.]

WAC 246-390-990 Fees. The fees in this section are established in accordance with RCW 43.70.250 to defray the department's costs associated with certifying laboratories. The department shall review the fee structure annually and may modify the fees as necessary to reflect current administrative costs.

(1) On-site inspections shall not be conducted nor shall provisional or other certifications be granted until appropriate fees have been received by the department.

(2) Out-of-state laboratories requesting reciprocity shall pay a fee of one hundred dollars.

(3) Out-of-state laboratories in states which have not established a reciprocity agreement with Washington shall follow the fee schedule in this section and pay all travel costs for the CO for any necessary on-site inspections.

(4) The following fees are due upon application and at the time of each renewal:

BASE FEE OF $100 PLUS THE FOLLOWING SCHEDULE

Category	Parameter		Fee/ Parameter	Max. Fee per Category
Inorganic Contaminants & Physical Characteristics	Arsenic	As	$60.00	$1000.00
	Barium	Ba		
	Cadmium	Cd		
	Chromium	Cr		
	Iron	Fe		
	Lead	Pb		
	Manganese	Mn		
	Mercury	Hg		
	Selenium	Se		
	Silver	Ag		
	Sodium	Na		
	Hardness			
	Conductivity			
	Turbidity			
	Color			
	Fluoride	F		
	Nitrate	as N		
	Chloride	Cl		
	Sulfate	SO_4		
	TDS			
	Copper	Cu		
	Zinc	Zn		
	Residual Disinfection Chlorine			
	Ozone			
	Chlorine Dioxide			
	Alkalinity			
	Calcium			
	Nitrite			
	Temperature			
	pH			
	Chloride			
Organic Contaminants	Insecticides (Endrin, Lindane,		$150.00	$750.00

BASE FEE OF $100 PLUS THE FOLLOWING SCHEDULE

Category	Parameter	Fee/ Parameter	Max. Fee per Category
(GC, GC/MS)	methoxychlor & toxaphene)	$150.00	
	Herbicides (2,4-D & 2,4,5-TP)		
	TTHM	$150.00	
	MTP	$150.00	
	Regulated VOCs	$150.00	
	Unregulated VOCs	$150.00	
Microbiological	MF	$150.00	$450.00
	P-A	$150.00	
	HPC	$150.00	
	MPN	$150.00	
Radiological	Gross alpha	$150.00	$1400.00
	Radium-226	$150.00	
	Radium-228	$150.00	
	Uranium	$150.00	
	Gross beta	$150.00	
	Strontium-89	$150.00	
	Strontium-90	$150.00	
	Photon Emitters	$150.00	
	Iodine-131	$150.00	
	Tritium	$150.00	
	Radon	$150.00	

[Statutory Authority: RCW 43.20.050. 92-23-060 (Order 313), § 246-390-990, filed 11/17/92, effective 12/18/92.]

Chapter 246-451 WAC

HOSPITALS—ASSESSMENTS AND RELATED REPORTS

WAC

246-451-001 Purpose.
246-451-010 Definitions.
246-451-020 Levying of assessment.
246-451-030 Payment of assessment.
246-451-040 Assessment exceptions.
246-451-050 Reporting of information.
246-451-060 Penalties for violation.

WAC 246-451-001 Purpose. This chapter is adopted by the Washington state department of health to implement the provisions of RCW 70.170.080, regarding the financing of the basic expenses for the hospital data collection and reporting activities by the department by an assessment against hospitals.

[Statutory Authority: Chapters 43.070 [43.70] and 70.170 RCW. 94-12-089, § 246-451-001, filed 6/1/94, effective 7/2/94. Statutory Authority: RCW 43.70.040. 91-02-049 (Order 121), recodified as § 246-451-001, filed 12/27/90, effective 1/31/91; Order 74-04, § 261-10-010, filed 3/29/74; Order 74-03, § 261-10-010, filed 2/15/74.]

WAC 246-451-010 Definitions. As used in this chapter, unless the context requires otherwise,

(1) "Department" shall mean the Washington state department of health created by chapter 43.70 RCW.

(2) "Hospital" shall mean any health care institution which is required to qualify for a license under RCW 70.41.-020(2); or as a psychiatric hospital under chapter 71.12 RCW.

(3) "Gross operating costs" shall mean the sum of direct operating expenses required to be reported in cost centers 6000-8999, as specified in the manual adopted under WAC 246-454-020.

[Statutory Authority: Chapters 43.070 [43.70] and 70.170 RCW. 94-12-089, § 246-451-010, filed 6/1/94, effective 7/2/94. Statutory Authority: RCW 43.70.040. 91-02-049 (Order 121), recodified as § 246-451-010, filed 12/27/90, effective 1/31/91. Statutory Authority: Chapter 70.39 RCW. 84-20-066 (Order 84-05, Resolution No. 84-05), § 261-10-020, filed 10/1/84; 83-06-036 (Order 83-02, Resolution No. 83-02), § 261-10-020, filed 2/28/83; Order 74-03, § 261-10-020, filed 2/15/74.]

WAC 246-451-020 Levying of assessment. Rate: The department, pursuant to RCW 70.170.080 hereby levies upon each hospital an annual assessment at the rate of four one-hundredths of one percent of such hospital's gross operating costs incurred during its fiscal year ending on or before June 30th of the preceding calendar year.

[Statutory Authority: Chapters 43.070 [43.70] and 70.170 RCW. 94-12-089, § 246-451-020, filed 6/1/94, effective 7/2/94. Statutory Authority: RCW 43.70.040. 91-02-049 (Order 121), recodified as § 246-451-020, filed 12/27/90, effective 1/31/91. Statutory Authority: Chapter 70.39 RCW. 83-06-036 (Order 83-02, Resolution No. 83-02), § 261-10-030, filed 2/28/83; Order 74-03, § 261-10-030, filed 2/15/74.]

WAC 246-451-030 Payment of assessment. (1) The department annually shall calculate the amount of assessment due from each hospital, and shall prepare and mail to such hospital a statement indicating the amount of the assessment. The assessment shall be paid within ninety days after the statement of such assessment is mailed by the department.

(2) An assessment reminder notice shall be mailed forty-five days after the mailing of the initial statement.

(3) A second assessment reminder notice shall be mailed ninety days after the mailing of the initial statement. This reminder shall declare the assessment delinquent and a penalty shall be payable, calculated as interest on the delinquent assessment at the rate of twelve percent per annum.

(4) A third assessment reminder notice shall be mailed one hundred twenty days after the mailing of the initial statement. This reminder shall state the delinquent status of the assessment and the total accrued interest to the date of this reminder notice.

(5) A fourth assessment reminder notice shall be mailed one hundred fifty days after the mailing of the initial statement. This reminder shall be the final reminder and shall state the amount of the delinquent assessment and total interest accrued to the date of this reminder. In addition, the hospital will be notified that if payment of the assessment and all accrued interest is not made within thirty days of the reminder, the account will be sent to the attorney general for appropriate action.

(6) Whenever a partial payment is made, the remaining balance shall be treated in the same manner as provided in subsections (2) through (5) of this section.

[Statutory Authority: Chapters 43.070 [43.70] and 70.170 RCW. 94-12-089, § 246-451-030, filed 6/1/94, effective 7/2/94. Statutory Authority: RCW 43.70.040. 91-02-049 (Order 121), recodified as § 246-451-030, filed 12/27/90, effective 1/31/91. Statutory Authority: Chapter 70.39 RCW. 83-06-036 (Order 83-02, Resolution No. 83-02), § 261-10-040, filed 2/28/83; Order 74-03, § 261-10-040, filed 2/15/74.]

WAC 246-451-040 Assessment exceptions. (1) Upon receipt of a request in detail to the satisfaction of the department, the department may grant an exemption from assessment to a hospital for such assessment period(s) or portion thereof as the department shall specify, for the following reasons:

(a) The hospital was not in operation for the entire twelve months of its assessable fiscal year. (Such hospital, however, shall be liable for an assessment based on its gross operating costs for the period of its assessable fiscal year during which it was in operation.)

(b) The hospital charges no fee to users of its services; presents no billing, either direct or indirect, to users of its services; and presents no billing and accepts no payment for services from private or public insurers.

(2) The request for an exemption from assessment shall specify the assessment period(s) or portion thereof for which exemption is sought, and the reasons why the department should grant the exemption. A request for an exemption shall be acted upon by the department within sixty days of the receipt thereof.

(3) Any hospital granted an exemption from assessment under this chapter, nevertheless, shall be required to conform to all reporting requirements as the department may prescribe.

(4) An entity that assumes the operation of, or otherwise becomes the operator of a hospital shall also assume the assessment obligation of any previous operating entity.

[Statutory Authority: Chapters 43.070 [43.70] and 70.170 RCW. 94-12-089, § 246-451-040, filed 6/1/94, effective 7/2/94. Statutory Authority: RCW 43.70.040. 91-02-049 (Order 121), recodified as § 246-451-040, filed 12/27/90, effective 1/31/91; Order 74-03, § 261-10-050, filed 2/15/74.]

WAC 246-451-050 Reporting of information. For the purpose of calculating the assessment, the department will use the most recent year-end report submitted pursuant to WAC 246-454-050.

[Statutory Authority: Chapters 43.070 [43.70] and 70.170 RCW. 94-12-089, § 246-451-050, filed 6/1/94, effective 7/2/94. Statutory Authority: RCW 43.70.040. 91-02-049 (Order 121), recodified as § 246-451-050, filed 12/27/90, effective 1/31/91. Statutory Authority: Chapter 70.39 RCW. 83-06-036 (Order 83-02, Resolution No. 83-02), § 261-10-060, filed 2/28/83; Order 74-03, § 261-10-060, filed 2/15/74.]

WAC 246-451-060 Penalties for violation. RCW 70.170.070 provides that every person who shall violate or knowingly aid and abet the violation of chapter 70.170 RCW or any valid orders, rules, or regulations thereunder, or who fails to perform any act which that chapter makes it his/her duty to perform shall be guilty of a misdemeanor. Following official notice to the accused by the department of the existence of an alleged violation, each day upon which a violation occurs shall constitute a separate violation. Any person violating the provisions of chapter 70.170 RCW may be enjoined from continuing such violation. Failure to remit the payment required by WAC 246-451-030 or file the reports required by WAC 246-451-050 shall constitute a violation, and the department may levy a civil penalty not to exceed one thousand dollars per day for each day following official notice of the violation by the department. The department may grant extensions of time to remit the payment or file the reports, in which cases failure to file the reports shall not constitute a violation until the extension period has expired.

[Statutory Authority: Chapters 43.070 [43.70] and 70.170 RCW. 94-12-089, § 246-451-060, filed 6/1/94, effective 7/2/94. Statutory Authority: RCW 43.70.040. 91-02-049 (Order 121), recodified as § 246-451-060, filed

12/27/90, effective 1/31/91. Statutory Authority: RCW 70.39.180. 86-11-041 (Order 86-01, Resolution No. 86-01), § 261-10-080, filed 5/16/86; Order 74-03, § 261-10-080, filed 2/15/74.]

Chapter 246-453 WAC
HOSPITAL CHARITY CARE

WAC

246-453-001	Purpose.
246-453-010	Definitions.
246-453-020	Uniform procedures for the identification of indigent persons.
246-453-030	Data requirements for the identification of indigent persons.
246-453-040	Uniform criteria for the identification of indigent persons.
246-453-050	Guidelines for the development of sliding fee schedules.
246-453-060	Denial of access to emergency care based upon ability to pay and transfer of patients with emergency medical conditions or active labor.
246-453-070	Standards for acceptability of hospital policies for charity care and bad debts.
246-453-080	Reporting requirements.
246-453-090	Penalties for violation.

DISPOSITION OF SECTIONS FORMERLY CODIFIED IN THIS CHAPTER

246-453-085 Charity care measurement. [Statutory Authority: RCW 43.70.040. 91-02-049 (Order 121), recodified as § 246-453-085, filed 12/27/90, effective 1/31/91. Statutory Authority: Chapter 70.39 RCW. 85-01-007 (Order 84-07, Resolution No. 84-07), § 261-14-050, filed 12/7/84.] Repealed by 91-05-048 (Order 142), filed 2/14/91, effective 3/17/91. Statutory Authority: RCW 70.170.-060.

WAC 246-453-001 Purpose. This chapter is adopted by the Washington state department of health to implement the provisions of chapter 70.170 RCW. These sections relate to hospital policies for charity care, bad debt and emergency medical care, including admission practices, the compilation and measurement of the level of charity care services provided by each hospital, and penalties for violation of these provisions.

[Statutory Authority: Chapters 43.070 [43.70] and 70.170 RCW. 94-12-089, § 246-453-001, filed 6/1/94, effective 7/2/94. Statutory Authority: RCW 70.170.060. 91-05-048 (Order 142), § 246-453-001, filed 2/14/91, effective 3/17/91. Statutory Authority: RCW 43.70.040. 91-02-049 (Order 121), recodified as § 246-453-001, filed 12/27/90, effective 1/31/91. Statutory Authority: Chapter 70.39 RCW. 85-01-007 (Order 84-07, Resolution No. 84-07), § 261-14-010, filed 12/7/84.]

WAC 246-453-010 Definitions. As used in this chapter, unless the context requires otherwise,

(1) "Department" means the Washington state department of health created by chapter 43.70 RCW;

(2) "Hospital" means any health care institution which is required to qualify for a license under RCW 70.41.020(2); or as a psychiatric hospital under chapter 71.12 RCW;

(3) "Manual" means the *Washington State Department of Health Accounting and Reporting Manual for Hospitals*, adopted under WAC 246-454-020;

(4) "Indigent persons" means those patients who have exhausted any third-party sources, including medicare and medicaid, and whose income is equal to or below 200% of the federal poverty standards, adjusted for family size or is otherwise not sufficient to enable them to pay for the care or to pay deductibles or coinsurance amounts required by a third-party payor;

(5) "Charity care" means appropriate hospital-based medical services provided to indigent persons, as defined in this section;

(6) "Bad debts" means uncollectible amounts, excluding contractual adjustments, arising from failure to pay by patients whose care has not been classified as charity care;

(7) "Appropriate hospital-based medical services" means those hospital services which are reasonably calculated to diagnose, correct, cure, alleviate, or prevent the worsening of conditions that endanger life, or cause suffering or pain, or result in illness or infirmity, or threaten to cause or aggravate a handicap, or cause physical deformity or malfunction, and there is no other equally effective more conservative or substantially less costly course of treatment available or suitable for the person requesting the service. For purpose of this section, "course of treatment" may include mere observation or, where appropriate, no treatment at all;

(8) "Medical staff" means physicians, dentists, nurses, and other professional individuals who have admitting privileges to the hospital, and may also participate as members of the medical staff committees, serve as officers of the medical staff, and serve as directors or chiefs of hospital departments;

(9) "Third-party coverage" and "third-party sponsorship" means an obligation on the part of an insurance company or governmental program which contracts with hospitals and patients to pay for the care of covered patients and services, and may include settlements, judgments, or awards actually received related to the negligent acts of others which have resulted in the medical condition for which the patient has received hospital services;

(10) "Unusually costly or prolonged treatment" means those services or combinations of services which exceed two standard deviations above the average charge, and/or three standard deviations above the average length of stay, as determined by the department's discharge data base;

(11) "Emergency care or emergency services" means services provided for care related to an emergency medical or mental condition;

(12) "Emergency department" and "emergency room" means that portion of the hospital facility organized for the purpose of providing emergency care or emergency services;

(13) "Emergency medical condition" means a medical condition manifesting itself by acute symptoms of sufficient severity, including severe pain, such that the absence of immediate medical attention could reasonably be expected to result in:

(a) Placing the health of the individual (or, with respect to a pregnant woman, the health of the woman or her unborn child) in serious jeopardy;

(b) Serious impairment of bodily functions;

(c) Serious dysfunction of any bodily organ or part.

With respect to a pregnant woman who is having contractions the term shall mean:

(d) That there is inadequate time to effect a safe transfer to another hospital before delivery; or

(e) That transfer may pose a threat to the health or safety of the woman or the unborn child;

(14) "Responsible party" means that individual who is responsible for the payment of any hospital charges which are not subject to third-party sponsorship;

(15) "Limited medical resources" means the nonavailability of services or medical expertise which are required or are expected to be required for the appropriate diagnosis, treatment, or stabilization per federal requirements of an individual's medical or mental situation;

(16) "Publicly available" means posted or prominently displayed within public areas of the hospital, and provided to the individual in writing and explained, at the time that the hospital requests information from the responsible party with regard to the availability of any third-party coverage, in any language spoken by more than ten percent of the population in the hospital's service area, and interpreted for other non-English speaking or limited-English speaking or other patients who can not read or understand the writing and explanation;

(17) "Income" means total cash receipts before taxes derived from wages and salaries, welfare payments, Social Security payments, strike benefits, unemployment or disability benefits, child support, alimony, and net earnings from business and investment activities paid to the individual;

(18) "Family" means a group of two or more persons related by birth, marriage, or adoption who live together; all such related persons are considered as members of one family;

(19) "Initial determination of sponsorship status" means an indication, pending verification, that the services provided by the hospital may or may not be covered by third party sponsorship, or an indication from the responsible party, pending verification, that he or she may meet the criteria for designation as an indigent person qualifying for charity care; and

(20) "Final determination of sponsorship status" means the verification of third party coverage or lack of third party coverage, as evidenced by payment received from the third party sponsor or denial of payment by the alleged third party sponsor, and verification of the responsible party's qualification for classification as an indigent person, subsequent to the completion of any appeals to which the responsible party may be entitled and which on their merits have a reasonable chance of achieving third-party sponsorship in full or in part.

[Statutory Authority: Chapters 43.070 [43.70] and 70.170 RCW. 94-12-089, § 246-453-010, filed 6/1/94, effective 7/2/94. Statutory Authority: RCW 70.170.060. 91-05-048 (Order 142), § 246-453-010, filed 2/14/91, effective 3/17/91. Statutory Authority: RCW 43.70.040. 91-02-049 (Order 121), recodified as § 246-453-010, filed 12/27/90, effective 1/31/91. Statutory Authority: Chapter 70.39 RCW. 85-01-007 (Order 84-07, Resolution No. 84-07), § 261-14-020, filed 12/7/84.]

WAC 246-453-020 Uniform procedures for the identification of indigent persons. For the purpose of identifying those patients that will be classified as indigent persons, all hospitals shall adopt and implement the following procedures:

(1) The initiation of collection efforts directed at the responsible party shall be precluded pending an initial determination of sponsorship status, provided that the responsible party is cooperative with the hospital's efforts to reach an initial determination of sponsorship status;

(a) Collection efforts shall include any demand for payment or transmission of account documents or information which is not clearly identified as being intended solely for the purpose of transmitting information to the responsible party;

(b) The initial determination of sponsorship status shall be completed at the time of admission or as soon as possible following the initiation of services to the patient;

(c) If the initial determination of sponsorship status indicates that the responsible party may meet the criteria for classification as an indigent person, as described in WAC 246-453-040, collection efforts directed at the responsible party will be precluded pending a final determination of that classification, provided that the responsible party is cooperative with the hospital's reasonable efforts to reach a final determination of sponsorship status;

(d) During the pendency of the initial determination of sponsorship status and/or the final determination of the applicability of indigent person criteria, hospitals may pursue reimbursement from any third-party coverage that may be identified to the hospital;

(e) The requirements of this subsection shall not apply to clinics operated by disproportionate share hospitals, as defined and identified by the department of social and health services, medical assistance services, provided that patients are advised of the availability of charity care at the time that services are provided and when presented with a request for payment.

(2) Notice shall be made publicly available that charges for services provided to those persons meeting the criteria established within WAC 246-453-040 may be waived or reduced.

(3) Any responsible party who has been initially determined to meet the criteria identified within WAC 246-453-040 shall be provided with at least fourteen calendar days or such time as the person's medical condition may require, or such time as may reasonably be necessary to secure and to present documentation as described within WAC 246-453-030 prior to receiving a final determination of sponsorship status.

(4) Hospitals must make every reasonable effort to determine the existence or nonexistence of third-party sponsorship that might cover in full or in part the charges for services provided to each patient.

(5) Hospitals may require potential indigent persons to use an application process attesting to the accuracy of the information provided to the hospital for purposes of determining the person's qualification for charity care sponsorship. Hospitals may not impose application procedures for charity care sponsorship which place an unreasonable burden upon the responsible party, taking into account any physical, mental, intellectual, or sensory deficiencies or language barriers which may hinder the responsible party's capability of complying with the application procedures. The failure of a responsible party to reasonably complete appropriate application procedures shall be sufficient grounds for the hospital to initiate collection efforts directed at the patient.

(6) Hospitals may not require deposits from those responsible parties meeting the criteria identified within WAC 246-453-040 (1) or (2), as indicated through an initial determination of sponsorship status.

(7) Hospitals must notify persons applying for charity care sponsorship of their final determination of sponsorship status within fourteen calendar days of receiving information in accordance with WAC 246-453-030; such notification must include a determination of the amount for which the responsible party will be held financially accountable.

(8) In the event that the hospital denies the responsible party's application for charity care sponsorship, the hospital must notify the responsible party of the denial and the basis for that denial.

(9) All responsible parties denied charity care sponsorship under WAC 246-453-040 (1) or (2) shall be provided with, and notified of, an appeals procedure that enables them to correct any deficiencies in documentation or request review of the denial and results in review of the determination by the hospital's chief financial officer or equivalent.

(a) Responsible parties shall be notified that they have thirty calendar days within which to request an appeal of the final determination of sponsorship status. Within the first fourteen days of this period, the hospital may not refer the account at issue to an external collection agency. After the fourteen day period, if no appeal has been filed, the hospital may initiate collection activities.

(b) If the hospital has initiated collection activities and discovers an appeal has been filed, they shall cease collection efforts until the appeal is finalized.

(c) In the event that the hospital's final decision upon appeal affirms the previous denial of charity care designation under the criteria described in WAC 246-453-040 (1) or (2), the responsible party and the department of health shall be notified in writing of the decision and the basis for the decision, and the department of health shall be provided with copies of documentation upon which the decision was based.

(d) The department will review the instances of denials of charity care. In the event of an inappropriate denial of charity care, the department may seek penalties as provided in RCW 70.170.070.

(10) Hospitals should make every reasonable effort to reach initial and final determinations of charity care designation in a timely manner; however, hospitals shall make those designations at any time upon learning of facts or receiving documentation, as described in WAC 246-453-030, indicating that the responsible party's income is equal to or below two hundred percent of the federal poverty standard as adjusted for family size. The timing of reaching a final determination of charity care status shall have no bearing on the identification of charity care deductions from revenue as distinct from bad debts.

(11) In the event that a responsible party pays a portion or all of the charges related to appropriate hospital-based medical care services, and is subsequently found to have met the charity care criteria at the time that services were provided, any payments in excess of the amount determined to be appropriate in accordance with WAC 246-453-040 shall be refunded to the patient within thirty days of achieving the charity care designation.

[Statutory Authority: RCW 70.170.060. 91-05-048 (Order 142), § 246-453-020, filed 2/14/91, effective 3/17/91.]

WAC 246-453-030 Data requirements for the identification of indigent persons. (1) For the purpose of reaching an initial determination of sponsorship status, hospitals shall rely upon information provided orally by the responsible party. The hospital may require the responsible party to sign a statement attesting to the accuracy of the information provided to the hospital for purposes of the initial determination of sponsorship status.

(2) Any one of the following documents shall be considered sufficient evidence upon which to base the final determination of charity care sponsorship status, when the income information is annualized as may be appropriate:

(a) A "W-2" withholding statement;

(b) Pay stubs;

(c) An income tax return from the most recently filed calendar year;

(d) Forms approving or denying eligibility for medicaid and/or state-funded medical assistance;

(e) Forms approving or denying unemployment compensation; or

(f) Written statements from employers or welfare agencies.

(3) In the event that the responsible party's identification as an indigent person is obvious to hospital personnel, and the hospital personnel are able to establish the position of the income level within the broad criteria described in WAC 246-453-040 or within income ranges included in the hospital's sliding fee schedule, the hospital is not obligated to establish the exact income level or to request the aforementioned documentation from the responsible party, unless the responsible party requests further review.

(4) In the event that the responsible party is not able to provide any of the documentation described above, the hospital shall rely upon written and signed statements from the responsible party for making a final determination of eligibility for classification as an indigent person.

(5) Information requests, from the hospital to the responsible party, for the verification of income and family size shall be limited to that which is reasonably necessary and readily available to substantiate the responsible party's qualification for charity sponsorship, and may not be used to discourage applications for such sponsorship. Only those facts relevant to eligibility may be verified, and duplicate forms of verification shall not be demanded.

[Statutory Authority: RCW 70.170.060. 91-05-048 (Order 142), § 246-453-030, filed 2/14/91, effective 3/17/91.]

WAC 246-453-040 Uniform criteria for the identification of indigent persons. For the purpose of identifying indigent persons, all hospitals shall use the following criteria:

(1) All responsible parties with family income equal to or below one hundred percent of the federal poverty standard, adjusted for family size, shall be determined to be indigent persons qualifying for charity sponsorship for the full amount of hospital charges related to appropriate hospital-based medical services that are not covered by private or public third-party sponsorship;

(2) All responsible parties with family income between one hundred one and two hundred percent of the federal poverty standard, adjusted for family size, shall be determined to be indigent persons qualifying for discounts from charges related to appropriate hospital-based medical services in

accordance with the hospital's sliding fee schedule and policies regarding individual financial circumstances;

(3) Hospitals may classify any individual responsible party whose income exceeds two hundred percent of the federal poverty standard, adjusted for family size, as an indigent person eligible for a discount from charges based upon that responsible party's individual financial circumstances.

[Statutory Authority: RCW 70.170.060. 91-05-048 (Order 142), § 246-453-040, filed 2/14/91, effective 3/17/91.]

WAC 246-453-050 Guidelines for the development of sliding fee schedules. All hospitals shall, within ninety days of the adoption of these rules, implement a sliding fee schedule for determination of discounts from billed charges for responsible parties meeting the criteria in WAC 246-453-040(2). These sliding fee schedules must be made available upon request.

(1) In developing these sliding fee schedules, hospitals shall consider the following guidelines:

(a) The sliding fee schedule shall consider the level of charges that are not covered by any public or private sponsorship in relation to or as a percentage of the responsible party's family income;

(b) The sliding fee schedule shall determine the maximum amount of charges for which the responsible party will be expected to provide payment, with flexibility for hospital management to hold the responsible party accountable for a lesser amount after taking into account the specific financial situation of the responsible party;

(c) The sliding fee schedule shall take into account the potential necessity for allowing the responsible party to satisfy the maximum amount of charges for which the responsible party will be expected to provide payment over a reasonable period of time, without interest or late fees; and

(d) Hospital policies and procedures regarding the sliding fee schedule shall specify the individual financial circumstances which may be considered by appropriate hospital personnel for purposes of adjusting the amount resulting from the application of the sliding fee schedule, such as:

(i) Extraordinary nondiscretionary expenses relative to the amount of the responsible party's medical care expenses;

(ii) The existence and availability of family assets, which may only be considered with regard to the applicability of the sliding fee schedule;

(iii) The responsible party's future income earning capacity, especially where his or her ability to work in the future may be limited as a result of illness; and

(iv) The responsible party's ability to make payments over an extended period of time.

(2) Examples of sliding fee schedules which address the guidelines in the previous subsection are:

(a) A person whose annual family income is between one hundred one and two hundred percent of the federal poverty standard, adjusted for family size, shall have his/her hospital charges that are not covered by public or private sponsorship limited to forty percent of the excess of that person's annual family income over one hundred percent of the federal poverty standard, adjusted for family size. This responsibility may be adjusted by appropriate hospital personnel after taking into consideration the individual financial circumstances of the responsible party. The responsible party's financial obligation which remains after the application of this sliding fee schedule may be payable in monthly installments over a reasonable period of time, without interest or late fees, as negotiated between the hospital and the responsible party.

(b) A person whose family income is between one hundred one and two hundred percent of the federal poverty standard, adjusted for family size, shall have his/her hospital charges that are not covered by public or private sponsorship reduced according to the schedule below. The resulting responsibility may be adjusted by appropriate hospital personnel after taking into consideration the individual financial circumstances of the responsible party. The responsible party's financial obligation which remains after the application of this sliding fee schedule may be payable in monthly installments over a reasonable period of time, without interest or late fees, as negotiated between the hospital and the responsible party. The schedule is as follows:

INCOME AS A PERCENTAGE OF FEDERAL POVERTY LEVEL	PERCENTAGE DISCOUNT
One hundred one to one hundred thirty-three	Seventy-five percent
One hundred thirty-four to one hundred sixty-six	Fifty percent
One hundred sixty-seven to two hundred	Twenty-five percent

(3) The provisions of this section and RCW 70.170.060 (5) shall not apply to the professional services of the hospital's medical staff, provided that the charges for such services are either submitted by the individual medical staff or are separately identified within the hospital's billing system.

[Statutory Authority: Chapters 43.070 [43.70] and 70.170 RCW. 94-12-089, § 246-453-050, filed 6/1/94, effective 7/2/94. Statutory Authority: RCW 70.170.060. 91-05-048 (Order 142), § 246-453-050, filed 2/14/91, effective 3/17/91.]

WAC 246-453-060 Denial of access to emergency care based upon ability to pay and transfer of patients with emergency medical conditions or active labor. (1) No hospital or its medical staff shall adopt or maintain admission practices or policies which result in:

(a) A significant reduction in the proportion of patients who have no third-party coverage and who are unable to pay for hospital services;

(b) A significant reduction in the proportion of individuals admitted for inpatient hospital services for which payment is, or is likely to be, less than the anticipated charges for or costs of such services; or

(c) The refusal to admit patients who would be expected to require unusually costly or prolonged treatment for reasons other than those related to the appropriateness of the care available at the hospital.

(2) No hospital shall adopt or maintain practices or policies which would deny access to emergency care based on ability to pay. No hospital which maintains an emergency department shall transfer a patient with an emergency medical condition or who is in active labor unless the transfer is performed at the request of the patient or is due to the limited medical resources of the transferring hospital. Hospitals must follow reasonable procedures in making transfers to other

hospitals including confirmation of acceptance of the transfer by the receiving hospital.

(3) The department shall monitor hospital compliance with subsections (1) and (2) of this section. The department shall report to the legislature and the governor on hospital compliance with these requirements and shall report individual instances of possible noncompliance to the state attorney general or the appropriate federal agency. For purposes of monitoring compliance with subsection (2) of this section, the department is to follow all definitions and requirements of federal law.

(4) Except as required by federal law and subsection (2) of this section, nothing in this section shall be interpreted to indicate that hospitals and their medical staff are required to provide appropriate hospital-based medical services, including experimental services, to any individual.

[Statutory Authority: RCW 70.170.060. 91-05-048 (Order 142), § 246-453-060, filed 2/14/91, effective 3/17/91.]

WAC 246-453-070 Standards for acceptability of hospital policies for charity care and bad debts. (1) Each hospital shall develop, and submit to the department, charity care policies, procedures, and sliding fee schedules consistent with the requirements included in WAC 246-453-020, 246-453-030, 246-453-040, and 246-453-050. Any subsequent modifications to those policies, procedures, and sliding fee schedules must be submitted to the department no later than thirty days prior to their adoption by the hospital.

(2) Each hospital shall develop, and submit to the department, bad debt policies and procedures, including reasonable and uniform standards for collection of the unpaid portions of hospital charges that are the patient's responsibility. These standards are to be part of each hospital's system of accounts receivable management manuals, which support hospital collection policies. Manuals should cover procedures for preadmission, admission, discharge, outpatient registration and discharge, billing, and credit and collections. All subsequent modifications to these bad debt policies must be submitted to the department no later than thirty days prior to their adoption by the hospital.

(3) The department shall review the charity care and bad debt policies and procedures submitted in accordance with the provisions of this section. If any of the policies and procedures do not meet the requirements of this section or WAC 246-453-020, 246-453-030, 246-453-040, or 246-453-050, the department shall reject the policies and procedures and shall so notify the hospital. Such notification shall be in writing, addressed to the hospital's chief executive officer or equivalent, and shall specify the reason(s) that the policies and procedures have been rejected. Any such notification must be mailed within fourteen calendar days of the receipt of the hospital's policies and procedures. Within fourteen days of the date of the rejection notification, the hospital shall revise and resubmit the policies and procedures.

[Statutory Authority: Chapters 43.070 [43.70] and 70.170 RCW. 94-12-089, § 246-453-070, filed 6/1/94, effective 7/2/94. Statutory Authority: RCW 70.170.060. 91-05-048 (Order 142), § 246-453-070, filed 2/14/91, effective 3/17/91. Statutory Authority: RCW 43.70.040. 91-02-049 (Order 121), recodified as § 246-453-070, filed 12/27/90, effective 1/31/91. Statutory Authority: Chapter 70.39 RCW. 85-01-007 (Order 84-07, Resolution No. 84-07), § 261-14-030, filed 12/7/84.]

WAC 246-453-080 Reporting requirements. Each hospital shall compile and report data to the department with regard to the amount of charity care provided, in accordance with instructions issued by the department.

[Statutory Authority: RCW 70.170.060. 91-05-048 (Order 142), § 246-453-080, filed 2/14/91, effective 3/17/91. Statutory Authority: RCW 43.70.040. 91-02-049 (Order 121), recodified as § 246-453-080, filed 12/27/90, effective 1/31/91. Statutory Authority: Chapter 70.39 RCW. 85-01-007 (Order 84-07, Resolution No. 84-07), § 261-14-040, filed 12/7/84.]

WAC 246-453-090 Penalties for violation. (1) Failure to file the policies, procedures, and sliding fee schedules as required by WAC 246-453-070 or the reports required by WAC 246-453-080 shall constitute a violation of RCW 70.170.060, and the department will levy a civil penalty of one thousand dollars per day for each day following official notice of the violation. The department may grant extensions of time to file the reports, in which cases failure to file the reports shall not constitute a violation until the extension period has expired.

(2) Failure to comply with other provisions of chapter 70.170 RCW, and chapter 246-453 WAC, shall result in civil penalties as provided within RCW 70.170.070(2), with the exception that the terms "not exceeding" and "not to exceed" will be read to mean "of."

[Statutory Authority: Chapters 43.070 [43.70] and 70.170 RCW. 94-12-089, § 246-453-090, filed 6/1/94, effective 7/2/94. Statutory Authority: RCW 70.170.060. 91-05-048 (Order 142), § 246-453-090, filed 2/14/91, effective 3/17/91. Statutory Authority: RCW 43.70.040. 91-02-049 (Order 121), recodified as § 246-453-090, filed 12/27/90, effective 1/31/91. Statutory Authority: RCW 70.39.180. 86-11-041 (Order 86-01, Resolution No. 86-01), § 261-14-090, filed 5/16/86.]

Chapter 246-454 WAC

HOSPITALS—SYSTEM OF ACCOUNTING, FINANCIAL REPORTING, BUDGETING, COST ALLOCATION

WAC

246-454-001	Purpose.
246-454-010	Definitions.
246-454-020	Adoption and establishment of uniform system.
246-454-030	Submission of budget.
246-454-050	Submission of year-end report.
246-454-070	Submission of quarterly reports.
246-454-080	Alternative system of financial reporting.
246-454-090	Modifications of uniform system.
246-454-110	Uniformly applicable interpretive rulings and minor manual modifications.
246-454-120	Penalties for violation.

DISPOSITION OF SECTIONS FORMERLY CODIFIED IN THIS CHAPTER

246-454-040 Budget amendment submittals authorized—Time limitations—Presumption. [Statutory Authority: RCW 43.70.040. 91-02-049 (Order 121), recodified as § 246-454-040, filed 12/27/90, effective 1/31/91. Statutory Authority: RCW 70.39.180. 86-13-052 (Order 86-02, Resolution No. 86-02), § 261-20-045, filed 6/13/86. Statutory Authority: Chapter 70.39 RCW. 84-20-066 (Order 84-05, Resolution No. 84-05), § 261-20-045, filed 10/1/84; 83-06-036 (Order 83-02, Resolution No. 83-02), § 261-20-045, filed 2/28/83.] Repealed by 94-12-089, filed 6/1/94, effective 7/2/94. Statutory Authority: Chapters 43.070 [43.70] and 70.170 RCW.

246-454-060 Inspection of hospitals' books and records. [Statutory Authority: RCW 43.70.040. 91-02-049 (Order 121), recodified as § 246-454-060, filed 12/27/90, effective 1/31/91. Statutory Authority: Chapter 70.39 RCW. 84-20-066 (Order 84-05, Resolution No. 84-05), § 261-20-

054, filed 10/1/84.] Repealed by 94-12-089, filed 6/1/94, effective 7/2/94. Statutory Authority: Chapters 43.070 [43.70] and 70.170 RCW.

246-454-100 Modifications of uniform system applicable to only "basic service" hospitals. [Statutory Authority: RCW 43.70.040. 91-02-049 (Order 121), recodified as § 246-454-100, filed 12/27/90, effective 1/31/91. Statutory Authority: Chapter 70.39 RCW. 84-20-066 (Order 84-05, Resolution No. 84-05), § 261-20-074, filed 10/1/84; 83-06-036 (Order 83-02, Resolution No. 83-02), § 261-20-074, filed 2/28/83.] Repealed by 94-12-089, filed 6/1/94, effective 7/2/94. Statutory Authority: Chapters 43.070 [43.70] and 70.170 RCW.

WAC 246-454-001 Purpose. This chapter is adopted by the Washington state department of health to implement the provisions of RCW 70.170.100 and 43.70.050 regarding the establishment of a uniform system of accounting, financial reporting, budgeting and cost allocation for hospitals in Washington state. This system shall be utilized by each hospital to record and report to the department its revenues, expenses, other income, other outlays, assets and liabilities, and units of service and to submit information, as may be required by the department, pertaining to the total financial needs of the hospital and the resources available or expected to become available to meet such needs.

[Statutory Authority: Chapters 43.070 [43.70] and 70.170 RCW. 94-12-089, § 246-454-001, filed 6/1/94, effective 7/2/94. Statutory Authority: RCW 43.70.040. 91-02-049 (Order 121), recodified as § 246-454-001, filed 12/27/90, effective 1/31/91. Statutory Authority: Chapter 70.39 RCW. 84-20-066 (Order 84-05, Resolution No. 84-05), § 261-20-010, filed 10/1/84; 83-06-036 (Order 83-02, Resolution No. 83-02), § 261-20-010, filed 2/28/83; 81-06-016 (Order 81-01, Resolution No. R-81-01), § 261-20-010, filed 2/20/81.]

WAC 246-454-010 Definitions. As used in this chapter, unless the context requires otherwise.

(1) "Department" means the Washington state department of health created by chapter 43.70 RCW.

(2) "Hospital" means any health care institution which is required to qualify for a license under RCW 70.41.020(2); or as a psychiatric hospital under chapter 71.12 RCW.

(3) "Manual" means the *Washington State Department of Health Accounting and Reporting Manual for Hospitals*, third edition adopted under WAC 246-454-020.

(4) "System of accounts" means the list of accounts, code numbers, definitions, units of measure, and principles and concepts included in the manual.

(5) "Budget" means the forecast of each hospital's total financial needs and the resources available to meet such needs for its next fiscal year and includes such information as shall be specified in the manual concerning volume and utilization projections, operating expenses, capital requirements, and deductions from revenue.

[Statutory Authority: Chapters 43.070 [43.70] and 70.170 RCW. 94-12-089, § 246-454-010, filed 6/1/94, effective 7/2/94. Statutory Authority: RCW 43.70.040. 91-02-049 (Order 121), recodified as § 246-454-010, filed 12/27/90, effective 1/31/91. Statutory Authority: Chapter 70.39 RCW. 84-20-066 (Order 84-05, Resolution No. 84-05), § 261-20-020, filed 10/1/84; 83-06-036 (Order 83-02, Resolution No. 83-02), § 261-20-020, filed 2/28/83; 81-06-016 (Order 81-01, Resolution No. R-81-01), § 261-20-020, filed 2/20/81.]

WAC 246-454-020 Adoption and establishment of uniform system. The department, pursuant to RCW 70.170.100, hereby adopts and establishes a uniform system of accounting, financial reporting, budgeting, and cost allocation for hospitals in Washington state, which system is described in the department's publication entitled *Washington State Department of Health Accounting and Reporting Manual for Hospitals*, third edition, which publication is hereby incorporated by this reference. The hospital shall utilize the manual for submitting information as may be required by the department, pertaining to the total financial needs of the hospital and the resources available or expected to become available to meet such needs.

[Statutory Authority: Chapters 43.070 [43.70] and 70.170 RCW. 94-12-089, § 246-454-020, filed 6/1/94, effective 7/2/94. Statutory Authority: RCW 43.70.040. 91-02-049 (Order 121), recodified as § 246-454-020, filed 12/27/90, effective 1/31/91. Statutory Authority: Chapter 70.39 RCW. 84-20-066 (Order 84-05, Resolution No. 84-05), § 261-20-030, filed 10/1/84; 83-06-036 (Order 83-02, Resolution No. 83-02), § 261-20-030, filed 2/28/83; 81-06-016 and 81-06-017 (Order 81-01, Resolution No. R-81-01 and Order 81-02, Resolution No. R-81-02), § 261-20-030, filed 2/20/81.]

Reviser's note: Amendments to the *Washington State Hospital Commission's Accounting and Reporting Manual*, second edition, were filed by the Washington State Hospital Commission under Order and Resolution No. 84-01, filed June 8, 1984, (Statutory Authority: Chapter 70.39 RCW). The code reviser, under the authority of RCW 34.05.210(4), has deemed it unduly cumbersome to publish. Copies of the *Accounting and Reporting Manual*, second edition, may be obtained by writing to the Washington State Hospital Commission, Mailstop FJ-21, Olympia, WA 98504.

Reviser's note: Amendments to the commission's *Accounting and Reporting Manual*, second edition, were filed on August 29, 1984, by Order and Resolution No. 84-03 (Statutory Authority: RCW 70.39.180(1)). The specific portions of the manual amended are as follows:

The addition of "Appendix E Respiratory Therapy Services Uniform Reporting Service Code Listing";

Page 2420.2 (cont. 13)7180 RESPIRATORY SERVICES;

Appendices Table of Contents.

Reviser's note: Amendments to the *Washington State Hospital Commission's Accounting and Reporting Manual*, second edition, were filed with the code reviser under Order and Resolution No. 84-08, filed December 7, 1984, (Statutory Authority: Chapter 70.39 RCW). The specific portions of the manual amended by this action are as follows:

(1) Addition of Appendix G, HFMA Principles and Practices Board Statement 2, defining charity service as contrasted to bad debt; and

(2) Revising the appendices table of contents to add Appendix G.

Reviser's note: Amendments to the *Washington State Hospital Commission's Accounting and Reporting Manual*, second edition, were filed with the code reviser under Order and Resolution No. 85-01, filed January 31, 1985, (Statutory Authority: Chapter 70.39 RCW). The specific portions of the manual amended by this action are as follows:

Accounting and reporting manual chapter 10000, entitled, "Reporting Requirements" sections:

Section 10001Year-end report
Section 10010Instructions
Section 10101Quarterly report
Section 10110Instructions
Form HOS-939 (1/85), Quarterly report (WSHC Q1)

Reviser's note: Amendments to the *Washington State Hospital Commission's Accounting and Reporting Manual*, second edition, were filed with the code reviser on July 29, 1985, under Order and Resolution No. 85-04 (Statutory Authority: RCW 70.39.180(1)), affecting System of Accounts, chapters 2000, 8000, and 10000. The specific pages of the manual amended are as follows:

Page 2210.4
2220
2220.1
2410.4
2410.4 (cont. 1)
2410.4 (cont. 2)
2410.4 (cont. 3)
8020 (cont. 60)
10101

10110
10110 (cont. 1)
10110 (cont. 2)
Quarterly Report Form
SS-8 Forms

Reviser's note: Amendments to the *Washington State Hospital Commission's Accounting And Reporting Manual*, second edition, were filed with the code reviser on November 24, 1986, under Order and Resolution No. 86-05 (Statutory Authority: Chapter 70.39 RCW). The topics amended are as follows:

Quarterly Report
- volumes by payer source
- deductions from revenue related to charity care
- expense and revenue accounts
- budgeting forms and instructions for magnetic resonance imaging, air transportation, extracorporeal shock wave lithotripsy, and organ acquisition
- reporting forms, accounts, and instructions for deductions from revenue
- bad debt collection procedures
- amendment request procedures, forms and instructions

Appendices
- radiology relative value units
- standards for collection procedures
- magnetic resonance imaging relative value units
- nuclear medicine relative value units.

WAC 246-454-030 Submission of budget. (1) Each hospital shall submit its annual budget to the department not less than thirty days prior to the beginning of its fiscal year. The budget shall contain that information specified in the manual and shall be submitted in the form and manner specified in the manual. If more than one hospital is operated by the reporting organization, the information required by this section shall be reported for each hospital separately.

(2) The hospital chief executive officer and presiding officer of the hospital's governing body shall attest that the information submitted under this section has been examined by such person and that to the best of his/her knowledge and belief such information is a true and correct statement of the total financial needs of the hospital for the budget period.

[Statutory Authority: Chapters 43.070 [43.70] and 70.170 RCW. 94-12-089, § 246-454-030, filed 6/1/94, effective 7/2/94. Statutory Authority: RCW 43.70.040. 91-02-049 (Order 121), recodified as § 246-454-030, filed 12/27/90, effective 1/31/91. Statutory Authority: RCW 70.39.180. 86-11-041 (Order 86-01, Resolution No. 86-01), § 261-20-040, filed 5/16/86. Statutory Authority: Chapter 70.39 RCW. 84-20-066 (Order 84-05, Resolution No. 84-05), § 261-20-040, filed 10/1/84; 83-06-036 (Order 83-02, Resolution No. 83-02), § 261-20-040, filed 2/28/83; 81-06-016 (Order 81-01, Resolution No. R-81-01), § 261-20-040, filed 2/20/81.]

WAC 246-454-050 Submission of year-end report. (1) Each hospital annually shall file its year-end report with the department within one hundred twenty days after the close of its fiscal year in the form and manner specified in the manual: Provided, however, The one hundred twenty-day period may be extended up to and including an additional sixty days upon submission of adequate justification to the department. If more than one hospital is operated by the reporting organization, the information required by this section shall be reported for each hospital separately.

(2) Information submitted pursuant to this section shall be certified by the hospital's administrative and financial officers, that such reports, to the best of their knowledge and belief, have been prepared in accordance with the prescribed system of accounting and reporting, and fairly state the financial position of the hospital as of the specified date. The department also may require attestation as to such statements from responsible officials of the hospital so designated by the governing body, if any, of the hospital.

[Statutory Authority: Chapters 43.070 [43.70] and 70.170 RCW. 94-12-089, § 246-454-050, filed 6/1/94, effective 7/2/94. Statutory Authority: RCW 43.70.040. 91-02-049 (Order 121), recodified as § 246-454-050, filed 12/27/90, effective 1/31/91. Statutory Authority: Chapter 70.39 RCW. 84-20-066 (Order 84-05, Resolution No. 84-05), § 261-20-050, filed 10/1/84; 83-06-036 (Order 83-02, Resolution No. 83-02), § 261-20-050, filed 2/28/83; 81-06-016 (Order 81-01, Resolution No. R-81-01), § 261-20-050, filed 2/20/81.]

WAC 246-454-070 Submission of quarterly reports. Each hospital shall submit a quarterly summary utilization and financial report within forty-five days after the end of each calendar quarter. The quarterly report shall contain that information specified by the department and shall be submitted in the form and manner specified by the department.

[Statutory Authority: Chapters 43.070 [43.70] and 70.170 RCW. 94-12-089, § 246-454-070, filed 6/1/94, effective 7/2/94. Statutory Authority: RCW 43.70.040. 91-02-049 (Order 121), recodified as § 246-454-070, filed 12/27/90, effective 1/31/91. Statutory Authority: Chapter 70.39 RCW. 85-04-026 (Order 85-01, Resolution No. 85-01), § 261-20-057, filed 1/31/85.]

WAC 246-454-080 Alternative system of financial reporting. Upon receipt of a request in detail to the satisfaction of the department, the department in its discretion may approve an alternative system for reporting of information under WAC 246-454-030 or 246-454-050 by a hospital for such period(s) or portion thereof as the department shall specify, if:

(1) The hospital charges no fee to users of its services, presents no billing, either direct or indirect, to users of its services, and presents no billing and accepts no payment for services from private or public insurers.

(2) The hospital is significantly different from other hospitals in one or more of the following respects: Size; financial structure; methods of payment for services; or scope, type, and method of providing services.

(3) The hospital has other pertinent distinguishing characteristics.

(4) Such alternative system will avoid otherwise unduly burdensome costs in meeting the requirements of the uniform reporting system established by the department.

[Statutory Authority: Chapters 43.070 [43.70] and 70.170 RCW. 94-12-089, § 246-454-080, filed 6/1/94, effective 7/2/94. Statutory Authority: RCW 43.70.040. 91-02-049 (Order 121), recodified as § 246-454-080, filed 12/27/90, effective 1/31/91. Statutory Authority: Chapter 70.39 RCW. 83-06-036 (Order 83-02, Resolution No. 83-02), § 261-20-060, filed 2/28/83; 81-06-016 (Order 81-01, Resolution No. R-81-01), § 261-20-060, filed 2/20/81.]

WAC 246-454-090 Modifications of uniform system. The department, after due consideration, in its discretion, may prepare and publish modifications of the manual, for such period and under such conditions as the department shall determine. Such modifications shall be prepared in the format of, and shall be adopted by the department as a rule pursuant to chapter 34.04 [34.05] RCW. A copy of such modifications shall be mailed to each hospital and manual holder of record.

[Statutory Authority: Chapters 43.070 [43.70] and 70.170 RCW. 94-12-089, § 246-454-090, filed 6/1/94, effective 7/2/94. Statutory Authority: RCW 43.70.040. 91-02-049 (Order 121), recodified as § 246-454-090, filed 12/27/90, effective 1/31/91. Statutory Authority: Chapter 70.39 RCW. 83-06-036 (Order 83-02, Resolution No. 83-02), § 261-20-070, filed 2/28/83; 81-06-016 (Order 81-01, Resolution No. R-81-01), § 261-20-070, filed 2/20/81.]

WAC 246-454-110 Uniformly applicable interpretive rulings and minor manual modifications. (1) The department is authorized to make uniformly applicable interpretive rulings with respect to matters contained in the manual. The department is also authorized to correct typographical and coding errors as well as make other minor organizational modifications when such corrections and modifications appear to be necessary.

(2) Any such interpretive ruling, correction, or modification shall be in writing and distributed as an attachment to a consecutively numbered transmittal. Such transmittal shall describe the changes in detail and shall include instructions regarding the placement of such material in the manual. Each hospital and manual holder of record shall be sent a copy of any such transmittal together with all attachments.

[Statutory Authority: Chapters 43.070 [43.70] and 70.170 RCW. 94-12-089, § 246-454-110, filed 6/1/94, effective 7/2/94. Statutory Authority: RCW 43.70.040. 91-02-049 (Order 121), recodified as § 246-454-110, filed 12/27/90, effective 1/31/91. Statutory Authority: Chapter 70.39 RCW. 83-06-036 (Order 83-02, Resolution No. 83-02), § 261-20-080, filed 2/28/83; 81-06-016 (Order 81-01, Resolution No. R-81-01), § 261-20-080, filed 2/20/81.]

WAC 246-454-120 Penalties for violation. RCW 70.170.070 provides that every person who shall violate or knowingly aid and abet the violation of chapter 70.170 RCW or any valid orders, rules, or regulations thereunder, or who fails to perform any act which that chapter makes it his/her duty to perform shall be guilty of a misdemeanor. Following official notice to the accused by the department of the existence of an alleged violation, each day upon which a violation occurs shall constitute a separate violation. Any person violating the provisions of chapter 70.170 RCW may be enjoined from continuing such violation. Failure to file the reports required by WAC 246-454-030(1), 246-454-050(1), and 246-454-070 shall constitute a violation, and the department may levy a civil penalty not to exceed one thousand dollars per day for each day following official notice of the violation by the department. The department may grant extensions of time to file the reports, in which cases failure to file the reports shall not constitute a violation until the extension period has expired.

[Statutory Authority: Chapters 43.070 [43.70] and 70.170 RCW. 94-12-089, § 246-454-120, filed 6/1/94, effective 7/2/94. Statutory Authority: RCW 43.70.040. 91-02-049 (Order 121), recodified as § 246-454-120, filed 12/27/90, effective 1/31/91. Statutory Authority: RCW 70.39.180. 86-11-041 (Order 86-01, Resolution No. 86-01), § 261-20-090, filed 5/16/86. Statutory Authority: Chapter 70.39 RCW. 85-04-026 (Order 85-01, Resolution No. 85-01), § 261-20-090, filed 1/31/85; 83-06-036 (Order 83-02, Resolution No. 83-02), § 261-20-090, filed 2/28/83.]

Chapter 246-455 WAC
HOSPITAL PATIENT DISCHARGE INFORMATION REPORTING

WAC

246-455-001	Purpose.
246-455-010	Definitions.
246-455-020	Reporting of UB-92/UB-04 data set information.
246-455-040	Acceptable media for submission of data.
246-455-050	Time deadline for submission of data.
246-455-060	Edits to data.
246-455-070	Revisions to submitted data.
246-455-080	Security of the data.
246-455-090	Release of the data.
246-455-100	Penalties for violation.

DISPOSITION OF SECTIONS FORMERLY CODIFIED IN THIS CHAPTER

246-455-030 Reporting of E-Codes. [Statutory Authority: RCW 43.70.040 and [43.]70.170. 03-13-029, § 246-455-030, filed 6/10/03, effective 7/11/03. Statutory Authority: RCW 43.70.040. 91-02-049 (Order 121), recodified as § 246-455-030, filed 12/27/90, effective 1/31/91. Statutory Authority: Chapter 70.39 RCW. 88-16-043 (Order 88-05, Resolution No. 88-05), § 261-50-035, filed 7/29/88.] Repealed by 07-09-091, filed 4/18/07, effective 5/23/07. Statutory Authority: RCW 43.70.040 and 43.70.052.

WAC 246-455-001 Purpose. This chapter is adopted by the Washington state department of health pursuant to RCW 43.70.040, 43.70.052, and 70.170.010 relating to the collection and maintenance of patient discharge data, including data necessary for identification of discharges by diagnosis-related groups.

[Statutory Authority: RCW 43.70.040 and 43.70.052. 07-09-091, § 246-455-001, filed 4/18/07, effective 5/23/07. Statutory Authority: RCW 43.70.040 and [43.]70.170. 03-13-029, § 246-455-001, filed 6/10/03, effective 7/11/03. Statutory Authority: RCW 43.70.040 and chapter 70.170 RCW. 94-12-090, § 246-455-001, filed 6/1/94, effective 7/2/94. Statutory Authority: RCW 43.70.040. 91-02-049 (Order 121), recodified as § 246-455-001, filed 12/27/90, effective 1/31/91. Statutory Authority: Chapter 70.39 RCW. 84-20-067 (Order 84-06, Resolution No. 84-06), § 261-50-010, filed 10/1/84.]

WAC 246-455-010 Definitions. As used in this chapter, unless the context requires otherwise,

(1) "Department" means department of health.

(2) "Diagnosis-related groups" is a classification system that groups hospital patients according to principal and secondary diagnosis, presence or absence of a surgical procedure, age, presence or absence of significant comorbidities or complications, and other relevant criteria.

(3) "Hospital" means any health care institution which is required to qualify for a license under RCW 70.41.020(2); or as a psychiatric hospital under chapter 71.12 RCW.

(4) "CHARS" means comprehensive hospital abstract reporting system.

(5) "*CHARS Procedure Manual*" means the written instructions for reporting hospital discharge data to the department.

(6) "*CHARS 837 Companion Guide*" means the written technical guidelines for creating the ASC X12 837 Health Care Claim file for CHARS.

(7) Uniform Billing "UB-92/UB-04 data set" means the data element specifications developed by the National Uniform Billing Committee which can be found at www.NUBC.org. The UB-92 specifications will be used until they are

replaced by the UB-04 of the National Uniform Billing Committee. Data elements are completely defined in the *CHARS Procedure Manual* which may be obtained on the department's web site or by contacting the department.

(8) "Patient discharge" means the termination of an inpatient admission or observation stay, including an admission as a result of a birth, in a Washington hospital.

(9) "Office of Management and Budget" means a body within the Executive Office of the President of the United States which is tasked with coordinating United States Federal agencies and can be found at www.whitehouse.gov/OMB.

(10) "Individually identifiable health information" means any health information that can be linked or traced to an individual or family. It includes but is not limited to: Past, present and future health care; billings or payments for health care; physical or mental health conditions; and physical or mental health diagnosis. This includes names and parts of names, Social Security numbers and parts of Social Security numbers, date of birth, admission date, exact discharge date, procedure date, nine-digit zip code and identifiers and patient control numbers assigned by a hospital for record retrieval.

(11) "Minimum necessary use" means that the use and disclosure of individually identifiable health information will be limited to the minimum amount necessary to accomplish the authorized purpose.

(12) "Data sharing agreement" means a signed agreement between government agencies, or researchers having an Institutional Review Board approval for transmitting, receiving and using records containing individually identifiable health information. Sharing such records requires each agency to have independent statutory authority to receive and disclose the information. The agreement specifies, at a minimum, what information will be exchanged, and the conditions or restrictions under which the information will be used and protected.

[Statutory Authority: RCW 43.70.040 and 43.70.052. 07-09-091, § 246-455-010, filed 4/18/07, effective 5/23/07. Statutory Authority: RCW 43.70.040 and [43.]70.170. 03-13-029, § 246-455-010, filed 6/10/03, effective 7/11/03. Statutory Authority: RCW 43.70.040 and chapter 70.170 RCW. 94-12-090, § 246-455-010, filed 6/1/94, effective 7/2/94. Statutory Authority: RCW 43.70.040. 91-02-049 (Order 121), recodified as § 246-455-010, filed 12/27/90, effective 1/31/91. Statutory Authority: RCW 70.39.180. 85-17-020 (Order 85-05, Resolution No. 85-05), § 261-50-020, filed 8/13/85. Statutory Authority: Chapter 70.39 RCW. 84-20-067 (Order 84-06, Resolution No. 84-06), § 261-50-020, filed 10/1/84.]

WAC 246-455-020 Reporting of UB-92/UB-04 data set information. (1) Effective for all hospital patient discharges on or after April 1, 1994, hospitals shall collect and report the following UB-92 or UB-04 data set elements to the department:

(a) Patient control number
Patient's unique alpha-numeric number assigned by the hospital to facilitate retrieval of individual patient records

(b) Type of bill

(c) Medicare provider number
(UB-92), National Provider Identifier (UB-04), or department assigned identifier, as applicable

(d) Patient last name (at least the first four letters)

(e) Patient first name (at least the first three letters)

(f) Patient middle initial

(g) Patient Social Security number (at least the last four digits)

(h) Patient zip code (U.S.A.)

(i) Patient country code (outside U.S.A.)

(j) Patient's date of birth

(k) Sex

(l) Admission date

(m) Type of admission

(n) Source of admission

(o) Patient discharge status

(p) Statement covers period (from - through)

(q) Revenue code

(r) Units of service

(s) Total charges

(t) Payer identification (up to three): Payer identification number per the CHARS procedure manual identifying each payer group from which the hospital may expect some payment of the bill

(u) Principal diagnosis code

(v) Other diagnosis codes

(w) External cause of injury (ECI) code

(x) Principal procedure code

(y) Other procedure code

(z) Attending provider identifier (legacy ID for UB-92); National Provider Identifier or legacy for UB-04 according to Centers for Medicare and Medicaid Services (CMS) schedule

(aa) Operating physician identifier (legacy ID for UB-92); National Provider Identifier or legacy for UB-04 according to CMS schedule, as applicable

(bb) Other provider identifiers (legacy ID for UB-92); National Provider Identifier or legacy for UB-04 according to CMS schedule, as applicable

(cc) Admission hour

(dd) Race - per minimum Office of Management and Budget (OMB) standards

(ee) Ethnicity - per minimum OMB standards

(ff) Discharge hour

(gg) Procedure date

(hh) Present on admission status

(ii) Health care provider taxonomy code

(jj) Health care common procedure coding system (HCPCS)

(kk) Service date

(2) The hospital shall report all patient discharge data described in WAC 246-455-010 and 246-455-020 according to UB-92/UB-04 specifications unless noted otherwise.

[Statutory Authority: RCW 43.70.040 and 43.70.052. 07-09-091, § 246-455-020, filed 4/18/07, effective 5/23/07. Statutory Authority: RCW 43.70.040 and [43.]70.170. 03-13-029, § 246-455-020, filed 6/10/03, effective 7/11/03. Statutory Authority: RCW 43.70.040 and chapter 70.170 RCW. 94-12-090, § 246-455-020, filed 6/1/94, effective 7/2/94. Statutory Authority: RCW 43.70.040. 91-02-049 (Order 121), recodified as § 246-455-020, filed 12/27/90, effective 1/31/91. Statutory Authority: Chapter 70.39 RCW. 87-08-037 (Order 87-02, Resolution No. 87-02), § 261-50-030, filed 3/30/87; 87-04-008 (Order 87-01, Resolution No. 87-01), § 261-50-030, filed 1/23/87. Statutory Authority: RCW 70.39.180. 86-14-081 (Order 86-03, Resolution No. 86-03), § 261-50-030, filed 7/1/86; 85-17-020 (Order 85-05, Resolution No. 85-05), § 261-50-030, filed 8/13/85. Statutory Authority: Chapter 70.39 RCW. 84-20-067 (Order 84-06, Resolution No. 84-06), § 261-50-030, filed 10/1/84.]

WAC 246-455-040 Acceptable media for submission of data. Hospitals shall submit data in the form prescribed by

the department in the *CHARS Procedure Manual* and *CHARS 837 Companion Guide*. Additional information not listed in WAC 246-455-020 may be required by the department to successfully process data submission files. Copies of the *CHARS Procedure Manual* and *CHARS 837 Companion Guide* may be obtained on the department's web site or by contacting the department.

[Statutory Authority: RCW 43.70.040 and 43.70.052. 07-09-091, § 246-455-040, filed 4/18/07, effective 5/23/07. Statutory Authority: RCW 43.70.040 and [43.]70.170. 03-13-029, § 246-455-040, filed 6/10/03, effective 7/11/03. Statutory Authority: RCW 43.70.040 and chapter 70.170 RCW. 94-12-090, § 246-455-040, filed 6/1/94, effective 7/2/94. Statutory Authority: RCW 43.70.040. 91-02-049 (Order 121), recodified as § 246-455-040, filed 12/27/90, effective 1/31/91. Statutory Authority: Chapter 70.39 RCW. 88-16-043 (Order 88-05, Resolution No. 88-05), § 261-50-040, filed 7/29/88; 87-04-008 (Order 87-01, Resolution No. 87-01), § 261-50-040, filed 1/23/87. Statutory Authority: RCW 70.39.180. 86-14-081 (Order 86-03, Resolution No. 86-03), § 261-50-040, filed 7/1/86; 85-17-020 (Order 85-05, Resolution No. 85-05), § 261-50-040, filed 8/13/85. Statutory Authority: Chapter 70.39 RCW. 84-20-067 (Order 84-06, Resolution No. 84-06), § 261-50-040, filed 10/1/84.]

WAC 246-455-050 Time deadline for submission of data. Hospitals shall submit data to the department or its designee within forty-five days following the end of each calendar month.

[Statutory Authority: RCW 43.70.040 and 43.70.052. 07-09-091, § 246-455-050, filed 4/18/07, effective 5/23/07. Statutory Authority: RCW 43.70.-040 and chapter 70.170 RCW. 94-12-090, § 246-455-050, filed 6/1/94, effective 7/2/94. Statutory Authority: RCW 43.70.040. 91-02-049 (Order 121), recodified as § 246-455-050, filed 12/27/90, effective 1/31/91. Statutory Authority: Chapter 70.39 RCW. 88-16-043 (Order 88-05, Resolution No. 88-05), § 261-50-050, filed 7/29/88; 87-04-008 (Order 87-01, Resolution No. 87-01), § 261-50-050, filed 1/23/87; 84-20-067 (Order 84-06, Resolution No. 84-06), § 261-50-050, filed 10/1/84.]

WAC 246-455-060 Edits to data. The department shall edit the data as follows:

(1) Record layout compatibility edits on data submitted in accordance with WAC 246-455-020; and

(2) Verification of the data set elements set forth in WAC 246-455-020.

[Statutory Authority: RCW 43.70.040 and chapter 70.170 RCW. 94-12-090, § 246-455-060, filed 6/1/94, effective 7/2/94. Statutory Authority: RCW 43.70.040. 91-02-049 (Order 121), recodified as § 246-455-060, filed 12/27/90, effective 1/31/91. Statutory Authority: Chapter 70.39 RCW. 88-16-043 (Order 88-05, Resolution No. 88-05), § 261-50-060, filed 7/29/88; 87-04-008 (Order 87-01, Resolution No. 87-01), § 261-50-060, filed 1/23/87; 84-20-067 (Order 84-06, Resolution No. 84-06), § 261-50-060, filed 10/1/84.]

WAC 246-455-070 Revisions to submitted data. (1) All data revisions required as a result of the edits performed pursuant to WAC 246-455-020 shall be corrected and returned to the department or its designee within fourteen working days.

(2) The department may assess a civil penalty as provided in RCW 70.170.070 and WAC 246-455-100 for the costs associated with more than one cycle of edits as described in WAC 246-455-060.

[Statutory Authority: RCW 43.70.040 and chapter 70.170 RCW. 94-12-090, § 246-455-070, filed 6/1/94, effective 7/2/94. Statutory Authority: RCW 43.70.040. 91-02-049 (Order 121), recodified as § 246-455-070, filed 12/27/90, effective 1/31/91. Statutory Authority: RCW 70.39.180. 85-17-020 (Order 85-05, Resolution No. 85-05), § 261-50-065, filed 8/13/85. Statutory Authority: Chapter 70.39 RCW. 84-20-067 (Order 84-06, Resolution No. 84-06), § 261-50-065, filed 10/1/84.]

WAC 246-455-080 Security of the data. (1) The department and its contractors or agents shall maintain the confidentiality of any individually identifiable health information as required by RCW 70.170.090 and federal Health Insurance Portability and Accountability Act standards.

(2) The department shall institute security and system safeguards to prevent and detect unauthorized access, modification, or manipulation of individually identifiable health information. Accordingly, the safeguards will include:

(a) Documented formal procedures for handling the information;

(b) Physical safeguards to protect computer systems and other pertinent equipment from intrusion;

(c) Processes to protect, control and audit access to the information;

(d) Processes to protect the information from unauthorized access or disclosure when it is transmitted over communication networks;

(e) Processes to protect the information when it is physically moved from one location to another;

(f) Processes to ensure the information is encrypted when:

(i) It resides in an area that is readily accessible by individuals who are not authorized to access the information (e.g., shared network drives or outside the agency data centers);

(ii) It is stored in a format that is easily accessible by individuals who are not authorized to access the information (e.g., text files and spreadsheets);

(iii) It is stored on removable media, or portable devices (e.g., tapes, electronic disks, thumb drives, external hard drives, laptops and handheld devices).

[Statutory Authority: RCW 43.70.040 and 43.70.052. 07-09-091, § 246-455-080, filed 4/18/07, effective 5/23/07. Statutory Authority: RCW 43.70.-040 and [43.]70.170. 03-13-029, § 246-455-080, filed 6/10/03, effective 7/11/03. Statutory Authority: RCW 43.70.040 and chapter 70.170 RCW. 94-12-090, § 246-455-080, filed 6/1/94, effective 7/2/94. Statutory Authority: RCW 43.70.040. 91-02-049 (Order 121), recodified as § 246-455-080, filed 12/27/90, effective 1/31/91. Statutory Authority: Chapter 70.39 RCW. 84-20-067 (Order 84-06, Resolution No. 84-06), § 261-50-070, filed 10/1/84.]

WAC 246-455-090 Release of the data. (1) To acknowledge the need to protect patient privacy, federal privacy rules are used as models for deidentification of individually identifiable health information and for minimum necessary disclosure of individually identifiable health information in the release of CHARS data.

(2) Individually identifiable health information will not be released to the public.

(3) Confidential data sets may contain all or portions of the individually identifiable health information. Confidential data sets will be released under the following conditions:

(a) Data sets containing any of the individually identifiable health information will be constructed by applying the standard of inclusion of the minimum elements necessary for the recipient's project requirements.

(b) Research projects may receive these data sets following approval by Washington state institutional review board, and receipt of a signed data use agreement with the board and the department of health.

(c) Projects of state, local and federal agencies directly related to quality assurance or quality improvement of the

data activities, hospitalization payment rate setting, program evaluation or public health surveillance may receive these data sets through a signed contract that includes a data use agreement.

The department reserves the right to determine whether a use is appropriate.

(4) The data sharing agreements for confidential data sets must include language which:

(a) Establishes who will use and receive the data set;

(b) Requires that the data not be used to identify or contact individuals;

(c) Requires appropriate safeguards to prevent the use or disclosure of the information other than as provided for in the agreement;

(d) Establishes the permitted use of the data set and excludes other uses;

(e) Requires immediate notification to DOH of any suspected security breach;

(f) Requires a report to DOH of any use or disclosure not permitted in the agreement;

(g) Contains penalties for violation of the agreement;

(h) Requires that the data set be destroyed or returned; and

(i) Requires all users, including contractors and subcontractors, to read the agreement, abide by its provisions and sign it.

[Statutory Authority: RCW 43.70.040 and 43.70.052. 07-09-091, § 246-455-090, filed 4/18/07, effective 5/23/07. Statutory Authority: RCW 43.70.040 and chapter 70.170 RCW. 94-12-090, § 246-455-090, filed 6/1/94, effective 7/2/94. Statutory Authority: RCW 43.70.040. 91-02-049 (Order 121), recodified as § 246-455-090, filed 12/27/90, effective 1/31/91. Statutory Authority: Chapter 70.39 RCW. 87-08-037 (Order 87-02, Resolution No. 87-02), § 261-50-075, filed 3/30/87.]

WAC 246-455-100 Penalties for violation. RCW 70.170.070 describes the penalty for violation of any valid orders, rules, regulations, and reporting requirements. The department may grant extensions of time to file the information. If such an extension is granted, failure to file the information shall not be considered a violation until the extension period has expired.

[Statutory Authority: RCW 43.70.040 and [43.]70.170. 03-13-029, § 246-455-100, filed 6/10/03, effective 7/11/03. Statutory Authority: RCW 43.70.-040 and chapter 70.170 RCW. 94-12-090, § 246-455-100, filed 6/1/94, effective 7/2/94. Statutory Authority: RCW 43.70.040. 91-02-049 (Order 121), recodified as § 246-455-100, filed 12/27/90, effective 1/31/91. Statutory Authority: Chapter 70.39 RCW. 88-16-043 (Order 88-05, Resolution No. 88-05), § 261-50-090, filed 7/29/88; 87-08-037 (Order 87-02, Resolution No. 87-02), § 261-50-090, filed 3/30/87; 87-04-008 (Order 87-01, Resolution No. 87-01), § 261-50-090, filed 1/23/87. Statutory Authority: RCW 70.39.180. 86-14-081 (Order 86-03, Resolution No. 86-03), § 261-50-090, filed 7/1/86; 85-17-020 (Order 85-05, Resolution No. 85-05), § 261-50-090, filed 8/13/85.]

Chapter 246-490 WAC
VITAL STATISTICS

WAC

246-490-010 Definitions.

VITAL RECORDS FOR RESEARCH PURPOSES OR STATISTICAL STUDY

246-490-020 Requesting vital records information without personal identifiers.
246-490-029 Father and/or mother may change given name.
246-490-030 Requesting a listing or file of vital records with personal identifiers.
246-490-039 Certificates in pencil not allowed.

INDIVIDUAL BIRTH CERTIFICATES FOR PERSONAL PURPOSES

246-490-055 Obtaining a birth certificate.
246-490-065 Notification when the record is not found.
246-490-069 Birth certificate to be filed for foundling child.
246-490-070 Fraudulently registered or changed birth certificates.
246-490-100 Reporting of pregnancy terminations.
246-490-110 Disclosure of information.

DISPOSITION OF SECTIONS FORMERLY CODIFIED IN THIS CHAPTER

246-490-001 Legal authorities. [Statutory Authority: RCW 43.20.-050. 92-02-019 (Order 225B), § 246-490-001, filed 12/23/91, effective 1/23/92; 91-02-051 (Order 124B), recodified as § 246-490-001, filed 12/27/90, effective 1/31/91; Regulation .40.999, effective 3/11/60.] Repealed by 06-17-182, filed 8/23/06, effective 9/23/06. Statutory Authority: RCW 43.20.050 and 18.39.215.

246-490-019 New record for child when father acknowledges paternity. [Statutory Authority: RCW 43.70.040 and 43.70.-150. 92-02-018 (Order 224), § 246-490-019, filed 12/23/91, effective 1/23/92. Statutory Authority: RCW 43.70.040. 91-02-049 (Order 121), recodified as § 246-490-019, filed 12/27/90, effective 1/31/91; Regulation.40.010, effective 3/11/60.] Repealed by 98-18-067, filed 8/31/98, effective 10/1/98. Statutory Authority: RCW 43.70.040 and 43.70.150.

246-490-040 Handling and care of human remains. [Statutory Authority: RCW 43.20.050. 92-02-019 (Order 225B), § 246-490-040, filed 12/23/91, effective 1/23/92; 91-02-051 (Order 124B), recodified as § 246-490-040, filed 12/27/90, effective 1/31/91. Statutory Authority: RCW 43.20.050 (2)(e). 89-02-007 (Order 323), § 248-40-040, filed 12/27/88; 88-13-080 (Order 312), § 248-40-040, filed 6/16/88. Statutory Authority: RCW 43.20.050. 86-14-008 (Order 300), § 248-40-040, filed 6/19/86; Regulation .40.040, effective 3/11/60.] Repealed by 06-17-182, filed 8/23/06, effective 9/23/06. Statutory Authority: RCW 43.20.050 and 18.39.215.

246-490-050 Transportation of human remains. [Statutory Authority: RCW 43.20.050. 91-02-051 (Order 124B), recodified as § 246-490-050, filed 12/27/90, effective 1/31/91. Statutory Authority: RCW 43.20.050 (2)(e). 89-02-007 (Order 323), § 248-40-050, filed 12/27/88; 88-13-080 (Order 312), § 248-40-050, filed 6/16/88. Statutory Authority: RCW 43.20.050. 86-14-008 (Order 300), § 248-40-050, filed 6/19/86; Regulation .40.050, effective 3/11/60.] Repealed by 06-17-182, filed 8/23/06, effective 9/23/06. Statutory Authority: RCW 43.20.050 and 18.39.215.

246-490-060 Cremated remains. [Statutory Authority: RCW 43.20.-050. 91-02-051 (Order 124B), recodified as § 246-490-060, filed 12/27/90, effective 1/31/91; Regulation .40.060, effective 3/11/60.] Repealed by 06-17-182, filed 8/23/06, effective 9/23/06. Statutory Authority: RCW 43.20.050 and 18.39.215.

WAC 246-490-010 Definitions. (1) "Department" means the department of health.

(2) "Human research review board" is a standing institutional review board operating under state law, chapter 42.48 RCW.

(3) "Confidential portion of the birth and fetal death certificates" means pertinent information relative to the birth and manner of delivery as specified in WAC 246-491-029.

(4) "Local registrar and their deputies" are those local officials operating under the direction and control of the state registrar. The health officer within each local health jurisdiction is the local registrar in and for the primary registration district under his or her supervision. His or her designees are deputy registrars.

(5) "Personal identifiers" are names, addresses, social security numbers and any other information that reveals or

can likely be associated with the identity of the person or persons to whom the record pertains.

(6) "Research" means a planned and systematic sociological, psychological, epidemiological, biomedical, or other scientific investigation with an objective to contribute to scientific knowledge, the solution of social and health problems, or the evaluation of public benefit, health care delivery or medical or social service programs.

(7) "Scientific merit" describes a research project or statistical study that is based on methods of data collection or analysis that are objective, can be replicated, and are designed to yield reliable and valid results.

(8) "State registrar" is the department of health official charged with the execution of the provisions of chapter 70.58 RCW.

(9) "Statistical study" means any project consisting of or based on assembling, classifying, and/or tabulating numerical data to present significant information about a given subject.

(10) "Vital records" means records of birth, death, fetal death, marriage, dissolution, annulment, and legal separation, maintained under the supervision of the state registrar of vital statistics.

[Statutory Authority: RCW 70.58.104 and 70.58.082. 00-11-169, § 246-490-010, filed 5/24/00, effective 6/24/00.]

VITAL RECORDS FOR RESEARCH PURPOSES OR STATISTICAL STUDY

WAC 246-490-020 Requesting vital records information without personal identifiers. (1) If you request vital records information without personal identifiers for research purposes or statistical study or if the state registrar determines that your research or statistical study does not require the use of personal identifiers, you will receive the vital records information in a format specified by the department.

(2) You may be required to sign an agreement requiring you to:

(a) Not release the vital records data files or listings to any third party without prior written approval of the state registrar; and

(b) Pay for charges based on actual costs associated with the preparation of the data files or analyses required to fulfill your request.

(3) If you are requesting birth or fetal death certificate confidential information without personal identifiers, you will be required to sign a written agreement, which includes:

(a) Conditions for the use of the birth or fetal death certificate data;

(b) Conditions for safeguarding the confidentiality of the records including limits on reporting results that may reveal personal identities;

(c) Appropriate citations for use in research reports or publications of research findings; and

(d) An estimate of the costs for preparing the analyses or copies of data files maintained by the state registrar.

(4) Your request may be denied if:

(a) The department does not have adequate resources with which to fulfill the request; or

(b) You do not agree to pay for charges associated with the preparation of the data or analyses required to fulfill your request.

[Statutory Authority: RCW 70.58.104 and 70.58.082. 00-11-169, § 246-490-020, filed 5/24/00, effective 6/24/00.]

WAC 246-490-029 Father and/or mother may change given name. The father and/or mother of any child whose birth has been registered may, during the minority of said child, change the given name of the child on the record by filing an affidavit of change with the state registrar.

[Statutory Authority: RCW 43.70.040 and 43.70.150. 92-02-018 (Order 224), § 246-490-029, filed 12/23/91, effective 1/23/92. Statutory Authority: RCW 43.70.040. 91-02-049 (Order 121), recodified as § 246-490-029, filed 12/27/90, effective 1/31/91; Regulation .40.020, effective 3/11/60.]

WAC 246-490-030 Requesting a listing or file of vital records with personal identifiers. (1) If you request access to vital records with personal identifiers for research purposes or statistical study, you shall be required to submit a letter of request to the state registrar stating:

(a) The purpose of the research;

(b) Research study design and analysis plan;

(c) The means for ensuring the confidentiality and security of the records;

(d) The time frame and geographic area of interest;

(e) The variable(s) needed; and

(f) The preferred time frame for receiving the information.

(2) You may be required to sign an agreement requiring you to:

(a) Not release the vital records data files or listings to any third party without prior written approval of the state registrar; and

(b) Pay for charges based on actual costs associated with the preparation of the data files or analyses required to fulfill your request.

(3) If you are requesting birth or fetal death certificate confidential information with personal identifiers for research purposes, you must obtain approval from the standing human research review board as specified in chapter 42.48 RCW. Application information is available through the department.

(4) Your request may be denied if:

(a) The information requested will be used for a commercial purpose;

(b) Your research proposal or statistical study is without scientific merit;

(c) The department does not have adequate resources with which to fulfill the request; or

(d) You do not agree to pay for charges associated with the preparation of the data or analyses required to fulfill your request.

[Statutory Authority: RCW 70.58.104 and 70.58.082. 00-11-169, § 246-490-030, filed 5/24/00, effective 6/24/00.]

WAC 246-490-039 Certificates in pencil not allowed. All certificates of birth or death shall either be made out legibly with unfading ink or typewritten through a good grade of typewriter ribbon, and shall be signed in either case in ink.

No certificate made in pencil shall be accepted by a registrar as a permanent record of birth or death.

[Statutory Authority: RCW 43.70.040 and 43.70.150. 92-02-018 (Order 224), § 246-490-039, filed 12/23/91, effective 1/23/92. Statutory Authority: RCW 43.70.040. 91-02-049 (Order 121), recodified as § 246-490-039, filed 12/27/90, effective 1/31/91; Regulation .40.030, effective 3/11/60.]

INDIVIDUAL BIRTH CERTIFICATES FOR PERSONAL PURPOSES

WAC 246-490-055 Obtaining a birth certificate. (1) Certified copies of birth certificates are available through the state registrar or local deputy registrar. You must pay the fee required under RCW 70.58.107 and provide the following information to obtain the birth certificate:

(a) Child's full name;

(b) Child's date of birth;

(c) Child's place of birth (city or county);

(d) Father's full name, if it appears on the record; and

(e) Mother's full maiden name.

(2) If there is not sufficient information to find the record, the department will send you a written request for additional information and the entire fee will be returned to you.

(3) If you cannot provide sufficient information due to special circumstances, you will be given an opportunity to explain the circumstances to the state or local deputy registrar. If in their judgment, these circumstances would have prevented you from knowing one or more of the required items, your request will be honored.

[Statutory Authority: RCW 70.58.104 and 70.58.082. 00-11-169, § 246-490-055, filed 5/24/00, effective 6/24/00.]

WAC 246-490-065 Notification when the record is not found. (1) If the state registrar cannot find the record, you will receive written notice from the state registrar's office including the following information:

A partial refund if you request it in writing within thirteen months of the original request date. In addition:

(a) You may request another search providing different information; or

(b) You may file a delayed birth certificate per RCW 70.58.110 and 70.58.120.

(2) If you request another search using different information, you must pay the full statutory required fee.

[Statutory Authority: RCW 70.58.104 and 70.58.082. 00-11-169, § 246-490-065, filed 5/24/00, effective 6/24/00.]

WAC 246-490-069 Birth certificate to be filed for foundling child. When an infant is found for whom no known certificate of birth is on file and for whom no other identification is known, the finder shall notify the police authorities having jurisdiction within the area of finding.

The police authorities, within 48 hours, shall have the local health officer determine or cause to be determined the approximate date of birth of the child.

The health officer, within 72 hours of notification shall complete a certificate of live birth on a standard Washington certificate of live birth form designating the place of finding as the place of birth and place of residence, the approximate date of birth, sex, and assign a given name. He shall write across the face of the certificate in the sections provided for parental information the words, "foundling child," sign, and date the certificate and cause the same to be filed with the local registrar of the area in which the finding occurred.

[Statutory Authority: RCW 43.70.040. 91-02-049 (Order 121), recodified as § 246-490-069, filed 12/27/90, effective 1/31/91; Regulation .40.080, effective 3/11/60.]

WAC 246-490-070 Fraudulently registered or changed birth certificates. (1) If the state registrar receives information that a birth certificate may have been registered or amended through fraud or misrepresentation, neither the state registrar nor local deputy registrars will release copies of that certificate until an informal administrative hearing is held.

(2) The department will notify the registrant or authorized representative, and he or she will have the opportunity to be heard at the hearing.

(a) If the state registrar finds that there was no fraud or misrepresentation, the record will be made available for inspection and copying.

(b) If the state registrar finds that the record was used fraudulently or was misrepresented, the registrar will tag the fraudulent birth certificate in the data base. The record and evidence will be retained, but will not be released or subject to inspection unless:

(i) A court of competent jurisdiction orders the release or inspection of the record; or

(ii) The state registrar utilizes the record for purposes of administering the vital statistics program.

[Statutory Authority: RCW 70.58.104 and 70.58.082. 00-11-169, § 246-490-070, filed 5/24/00, effective 6/24/00.]

WAC 246-490-100 Reporting of pregnancy terminations. Each hospital and facility where lawful induced abortions are performed during the first, second, or third trimester of pregnancy shall, on forms prescribed and supplied by the secretary, report to the department during the following month the number and dates of induced abortions performed during the previous month, giving for each abortion the age of the patient, geographic location of patient's residence, patient's previous pregnancy history, the duration of the pregnancy, the method of abortion, any complications, such as perforations, infections, and incomplete evacuations, the name of the physician or physicians performing or participating in the abortion and such other relevant information as may be required by the secretary. All physicians performing abortions in nonapproved facilities when the physician has determined that termination of pregnancy was immediately necessary to the meet a medical emergency, shall also report in the same manner, and shall additionally provide a clear and detailed statement of the facts upon which he or she based his or her judgment of medical emergency.

[Statutory Authority: RCW 43.70.040 and [43.70.]050. 94-04-083, § 246-490-100, filed 1/31/94, effective 3/3/94.]

WAC 246-490-110 Disclosure of information. To assure accuracy and completeness in reporting, as required to fulfill the purposes for which abortion statistics are collected, information received by the board or the department through filed reports or as otherwise authorized, shall not be disclosed

publicly in such a manner as to identify any individual without their consent, except by subpoena, nor in such a manner as to identify any facility except in a proceeding involving issues of certificates of approval.

[Statutory Authority: RCW 43.70.040 and [43.70.]050. 94-04-083, § 246-490-110, filed 1/31/94, effective 3/3/94.]

Chapter 246-491 WAC
VITAL STATISTICS—CERTIFICATES

WAC	
246-491-001	Purpose.
246-491-010	Definitions.
246-491-029	Information collected on the confidential section of live birth and fetal death certificates; modifications to the United States standard certificates and report forms.
246-491-039	Confidential information on state of Washington live birth and fetal death certificates under chapter 70.58 RCW.
246-491-149	Information collected on the legal or public section of certificates; modifications to the United States standard certificates and report forms.
246-491-990	Vital records fees.

WAC 246-491-001 Purpose. RCW 70.58.055 requires certificates for vital records to include, at a minimum, items recommended by the federal agency responsible for national vital statistics. RCW 70.58.055 allows the state board of health to require additional information for the confidential section of the birth certificate, and eliminate items from the federal forms that it identifies as not necessary for statistical study.

RCW 43.70.150 requires the secretary of the department of health to operate and maintain a state system for registering births, deaths, fetal deaths, marriages, divorce decrees, annulments and separations. RCW 43.70.160 requires the state registrar to prepare, print and supply the forms for registering, recording, and preserving vital statistics. These rules identify the forms used and information collected by the state on live birth, death, fetal death, marriage, divorce, dissolution of marriage and annulment.

[Statutory Authority: RCW 43.70.150, 70.58.055, and chapter 70.58 RCW. 02-20-092, § 246-491-001, filed 10/1/02, effective 11/1/02.]

WAC 246-491-010 Definitions. The definitions in this section apply throughout this chapter unless the context clearly requires otherwise:

(1) "Board" means the state board of health.

(2) "Department" means the department of health.

[Statutory Authority: RCW 43.70.150, 70.58.055, and chapter 70.58 RCW. 02-20-092, § 246-491-010, filed 10/1/02, effective 11/1/02.]

WAC 246-491-029 Information collected on the confidential section of live birth and fetal death certificates; modifications to the United States standard certificates and report forms. (1) Effective January 1, 2003, the department shall use the 2003 revisions of the United States standard forms of live birth and fetal death as the basis for the state certificates of live birth and fetal death. These forms are developed by the United States Department of Health and Human Services, National Center for Health Statistics.

(2) Copies of these forms may be obtained by contacting the department's center for vital statistics.

(3) Tables 1 and 2 list the statistical information contained in the confidential sections of the birth and fetal death certificates that the board requires the department to collect, and the differences between the state and U.S. standard.

U.S. STANDARD CERTIFICATE OF LIVE BIRTH

TABLE 1:
Confidential Birth Certificate Items

Item Number	Item Name	Difference from U.S. Standard, if any
15	Is mother married to the father?	
	If no, was mother married to anyone during the pregnancy?	Added
	Has the paternity affidavit been signed?	
20	Mother's education	Add "Specify": next to box for "8th Grade or less"
21	Mother of Hispanic origin?	
22	Mother's race	
23	Mother's occupation	Added
24	Mother's kind of business/industry	Added
29	Father's education	Add "Specify": next to box for "8th Grade or less"
30	Father of Hispanic origin?	
31	Father's race	
32	Father's occupation	Added
33	Father's kind of business/industry	Added
34	Mother's medical record number	
35	Mother's prepregnancy weight	
36	Mother's weight at delivery	
37	Mother's height	
38	Did mother get WIC food for herself during pregnancy?	
39	Cigarette smoking before and during pregnancy	
40a	Number of previous live births	
40b	Date of last live birth	
41a	Number of other pregnancy outcomes	
41b	Date of last other pregnancy outcome	
42a	Date of first prenatal care visit	
42b	Date of last prenatal care visit	

Item Number	Item Name	Difference from U.S. Standard, if any
43	Total number of prenatal visits for this pregnancy	
44	Date last normal menses began	
45	Was mother transferred to higher-level care for maternal medical or fetal indications for delivery?	
46	Principal source of payment for this delivery	Add "Indian Health" and "CHAMPUS"
47	Newborn medical record number	
48	Birth weight	
49	Infant head circumference	Added
50	Obstetric estimate of gestation	
51	Apgar score at 5 min; if score is less than 6, score at 10 minutes	
52	Plurality	
53	If not single birth - born 1st, 2nd, 3rd etc.	
54	Was infant transferred within 24 hours of delivery?	
55	Is infant living at time of the report?	
56	Is infant being breastfed?	
57	Risk factors in this pregnancy	Add "Group B streptococcus culture positive"
58	Method of delivery	
59	Infections present and/or treated during this pregnancy	Add "HIV infection" and "Other: Specify"
60	Obstetric procedures	
61	Abnormal conditions of the newborn	
62	Characteristics of labor and delivery	
63	Congenital anomalies of the newborn	
64	Maternal morbidity	
65	Onset of labor	

U.S. STANDARD REPORT OF FETAL DEATH

TABLE 2:

Confidential Fetal Death Certificate Items

Item Number	Item Name	Difference from U.S. Standard, if any
38	Weight of fetus	
39	Obstetric estimate of gestation	
40	Plurality	
41	If not single birth - born 1st, 2nd, 3rd etc.	
42	Mother's education	Add "Specify": next to box for "8th Grade or less"
43	Mother of Hispanic origin?	
44	Mother's race	
45	Mother's occupation	Added
46	Mother's kind of business/industry	Added
47	Mother married?	
48	Mother's height	
49	Did mother get WIC food for herself during pregnancy?	
50	Mother's prepregnancy weight	
51	Mother's weight at delivery	
52	Date last normal menses began	
53	Date of first prenatal care visit	
54	Date of last prenatal care visit	
55	Total number of prenatal visits for this pregnancy	
56a	Number of previous live births	
56b	Date of last live birth	
57a	Number of other pregnancy outcomes	
57b	Date of last other pregnancy outcome	
58	Cigarette smoking before and during pregnancy	
59	Was mother transferred to higher-level care for maternal medical or fetal indications for delivery?	
60	Father's education	Added
61	Father of Hispanic origin?	Added
62	Father's race	Added
63	Father's occupation	Added
64	Father's kind of business/industry	Added
65	Risk factors in this pregnancy	
66	Method of delivery	
67	Congenital anomalies of the fetus	
68	Maternal morbidity	
69	Infections present and/or treated during this pregnancy	Add "HIV infection" and "Other: Specify"

[Statutory Authority: RCW 43.70.150, 70.58.055, and chapter 70.58 RCW. 02-20-092, § 246-491-029, filed 10/1/02, effective 11/1/02. Statutory

Authority: Chapter 70.58 RCW. 91-20-073 (Order 196B), § 246-491-029, filed 9/26/91, effective 10/27/91. Statutory Authority: RCW 43.20.050. 91-02-051 (Order 124B), recodified as § 246-491-029, filed 12/27/90, effective 1/31/91. Statutory Authority: RCW 70.58.200. 88-19-092 (Order 310), § 248-124-010, filed 9/20/88. Statutory Authority: RCW 43.20.050 and 70.58.200. 84-02-004 (Order 270), § 248-124-010, filed 12/23/83; Order, § 248-124-010, filed 9/1/67.]

WAC 246-491-039 Confidential information on state of Washington live birth and fetal death certificates under chapter 70.58 RCW. The confidential sections of the certificate of live birth and the certificate of fetal death are not subject to public inspection and may not be included on certified copies of the record except upon order of a court.

[Statutory Authority: RCW 43.70.150, 70.58.055, and chapter 70.58 RCW. 02-20-092, § 246-491-039, filed 10/1/02, effective 11/1/02. Statutory Authority: Chapter 70.58 RCW. 91-20-073 (Order 196B), § 246-491-039, filed 9/26/91, effective 10/27/91. Statutory Authority: RCW 43.20.050. 91-02-051 (Order 124B), recodified as § 246-491-039, filed 12/27/90, effective 1/31/91. Statutory Authority: RCW 70.58.200. 88-19-092 (Order 310), § 248-124-015, filed 9/20/88.]

WAC 246-491-149 Information collected on the legal or public section of certificates; modifications to the United States standard certificates and report forms. (1) Effective January 1, 2003, the department shall use the 2003 revisions of the United States standard forms for live birth and fetal death.

(2) Effective January 1, 2004, the department shall use the 2003 standard form for death.

(3) Effective January 1, 1992, the department shall use the 1988 revisions of the United States standard forms for marriage and dissolution.

(4) These forms are developed by the United States Department of Health and Human Services, National Center for Health Statistics. Copies of these forms may be obtained by contacting the department's center for vital statistics.

(5) With the exception of the confidential section, the department may modify any part of these forms. Tables 3, 4, and 5 identify the modifications to the United States standard forms for live birth, fetal death, and death. Tables 6 and 7 identify modifications to the United States standard form for marriage, and certificate of divorce, dissolution of marriage, or annulment.

U.S. STANDARD CERTIFICATE OF LIVE BIRTH

Table 3:
Legal or Public Birth Certificate Items

Item Number	Item Name	Difference from U.S. Standard, if any
1	Child's name	
2	Child's date of birth	
3	Time of birth	
4	Type of birthplace	Add "En route," Add "Planned birthplace if different"
5	Child's sex	
6	Name of facility	
7	City, town or location of birth	
8	County of birth	
9	Mother's name before first marriage	
10	Mother's date of birth	
11	Mother's birthplace	
12	Mother's Social Security number	
13	Mother's current legal last name	
14	Social Security number requested for child?	
16a	Mother's residence - number, street, and Apt. No.	
16b	Mother's residence - city or town	
16c	Mother's residence - county	
16d	Tribal reservation name (if applicable)	Added
16e	Mother's residence - state or foreign country	
16f	Mother's residence - zip code + 4	
16g	Mother's residence - inside city limits?	
17	Telephone number	Added
18	How long at current residence?	Added
19	Mother's mailing address, if different	
25	Father's current legal name	
26	Father's date of birth	
27	Father's birthplace	
28	Father's Social Security number	
66	Certifier name and title	Delete check boxes
67	Date certified	
68	Attendant name and title	Delete check boxes
69	NPI of person delivering the baby	
—-	Date filed by registrar	Deleted

U.S. STANDARD REPORT OF FETAL DEATH

Table 4:
Legal or Public Fetal Death Certificate Items

Item Number	Item Name	Difference from U.S. Standard, if any
1	Name of fetus	
2	Sex	
3	Date of delivery	
4	Time of delivery	

Item Number	Item Name	Difference from U.S. Standard, if any
5	Type of birthplace	Add "En route," Add "Planned birthplace if different"
6	Name of facility	
7	Facility ID (NPI)	
8	City, town or location of birth	
9	Zip code of delivery	
10	County of birth	
11	Mother's name before first marriage	
12	Mother's date of birth	
13	Mother's current legal last name	
14	Mother's birthplace	
15a	Mother's residence - number, street, and Apt. No.	
15b	Mother's residence - city or town	
15c	Mother's residence - county	
15d	Tribal reservation name (if applicable)	Added
15e	Mother's residence - state or foreign country	
15f	Mother's residence - zip code + 4	
15g	Mother's residence - inside city limits?	
16	How long at current residence?	Added
17	Father's current legal name	
18	Father's date of birth	
19	Father's birthplace	
20	Name and title of person completing the report	
21	Date report completed	
22	Attendant name and title	Delete check boxes
23	NPI of person delivering the baby	
24	Method of disposition	
25	Date of disposition	
26	Place of disposition	Added
27	Location of disposition - city/town and state	Added
28	Name and complete address of funeral facility	Added
29	Funeral director signature	Added
30	Initiating cause/condition (cause of death)	
31	Other significant causes or conditions	
32	Estimated time of fetal death	
33	Was an autopsy performed?	
34	Was a histological placental examination performed?	
35	Were autopsy or histological placental examination results used in determining the cause of death?	
36	Registrar signature	Added
37	Date received	

U.S. STANDARD CERTIFICATE OF DEATH

Table 5:
Death Certificate Items

Item Number	Item Name	Difference from U.S. Standard, if any
1	Legal name (include a.k.a.'s if any)	
2	Death date	
3	Sex	
4a	Age - years	
4b	Age - under 1 year	
4c	Age - under 1 day	
5	Social Security number	
6	County of death	
7	Birth date	
8a	Birth place - city, town or county	
8b	Birth place - state or foreign country	
9	Decedent's education	Add "Specify": next to box for "8th Grade or less"
10	Decedent's Hispanic origin	
11	Decedent's race	
12	Was decedent ever in U.S. Armed Forces?	
13a	Residence - number and street	
13b	Residence - city or town	
13c	Residence - county	
13d	Tribal reservation name (if applicable)	Added
13e	Residence - state or foreign country	
13f	Residence - zip code	
13g	Inside city limits?	
14	Estimated length of time at residence	Added
15	Marital status at time of death	

U.S. STANDARD CERTIFICATE OF DEATH

Table 5:
Death Certificate Items

Item Number	Item Name	Difference from U.S. Standard, if any
16	Surviving spouse's name	
17	Occupation	
18	Kind of business/industry	
19	Father's name	
20	Mother's name before first marriage	
21	Informant - name	
22	Informant - relationship to decedent	
23	Informant - address	
24	Place of death	
25	Facility name (if not a facility, give number and street)	
26a	City, town, or location of death	
26b	State of death	
27	Zip code of death	
28	Method of disposition	
29	Place of disposition (name of cemetery, crematory, other place)	
30	Disposition - city/town, and state	
31	Name and complete address of funeral facility	
32	Date of disposition	Added
33	Funeral director signature	
34	Causes of death and intervals between onset and death	
35	Other significant conditions contributing to death	
36	Autopsy?	
37	Were autopsy findings available to complete the cause of death?	
38	Manner of death	
39	Pregnancy status	
40	Did tobacco use contribute to death?	
41	Date of injury	
42	Hour of injury	
43	Place of injury	
44	Injury at work?	
45	Injury location - street, city, county, state, zip	County Added
46	Describe how injury occurred	
47	Transport injury type	
48a	Certifying physician signature	
48b	Medical examiner/coroner signature	

U.S. STANDARD CERTIFICATE OF DEATH

Table 5:
Death Certificate Items

Item Number	Item Name	Difference from U.S. Standard, if any
49	Name and address of certifier	
50	Hour of death	
51	Name and title of attending physician if other than certifier	Added
52	Date certified	
53	Title of certifier	
54	License number of certifier	
55	ME/coroner file number	Added
56	Was case referred to medical examiner?	
57	County registrar signature	Added
58	County date received	Added
59	Record amendment	Added
—	License number of funeral director	Deleted
—	Date pronounced dead	Deleted
—	Time pronounced dead	Deleted
—	Signature of person pronouncing death	Deleted
—	License number of person pronouncing death	Deleted
—	Date person pronouncing death signed	Deleted

U.S. STANDARD LICENSE AND CERTIFICATE OF MARRIAGE

Table 6:
Certificate of Marriage

Item Number	Item Name	Difference from U.S. Standard, if any
—	Certificate name	Changed name of form to "Certificate of Marriage"
—	County of license	
—	Date valid	
—	Not valid after (date)	
1	Date of marriage	
2	County of ceremony	
3	Type of ceremony	Added
4	Date signed (by officiant)	Added
5	Officiant's name	
6	Officiant's signature	
7	Officiant's address	
8	Groom's name	
9	Groom's address (street)	
10	Groom's date of birth	
11	Groom's place of birth (state or country)	
12	Groom's address (city)	
13	Groom's address (inside city limits)	Added
14	Groom's address (county)	

Item Number	Item Name	Difference from U.S. Standard, if any
15	Groom's address (state)	
16	Groom's father - name	
17	Groom's father - place of birth	
18	Groom's mother - maiden name	
19	Groom's mother - place of birth	
20	Groom's signature	
21	Date signed (by groom)	
22	Bride's name	
23	Bride's maiden last name	
24	Bride's residence - (street)	
25	Bride's date of birth	
26	Bride's place of birth (state or country)	
27	Bride's residence (city)	
28	Bride's residence (inside city limits)	Added
29	Bride's residence (county)	
30	Bride's residence (state)	
31	Bride's father - name	
32	Bride's father - place of birth	
33	Bride's mother - maiden name	
34	Bride's mother - place of birth	
35	Bride's signature	
36	Date signed (by bride)	
37	Witness #1 signature	
38	Witness #2 signature	
39	County auditor signature	
40	Date received (by county auditor)	
Reverse side		Groom's Social Security number
Reverse side		Bride's Social Security number
	Groom's age last birthday	Deleted
	Bride's age last birthday	Deleted
	License to marry section	Deleted
	Expiration date of license	Deleted
	Title of issuing official	Deleted
	Confidential information	Deleted

U.S. STANDARD CERTIFICATE OF DIVORCE, DISSOLUTION OF MARRIAGE, OR ANNULMENT

TABLE 7:

Certification of Dissolution, Declaration of Invalidity of Marriage, or Legal Separation

Item Number	Item Name	Difference from U.S. Standard, if any
	Certificate name	Changed form name to certificate of dissolution, declaration of invalidity of marriage or legal separation
	Court file number	
1	Type of decree	Added check boxes
2	Date of filing	
3	County where decree filed	
4	Signature of superior court clerk	
5	Husband's name	
6	Husband's date of birth	
7	Husband's place of birth	
8	Husband's residence - street	
9	Husband's residence - city	
10	Husband's residence - inside city limits	Added
11	Husband's residence - county	
12	Husband's residence - state	
13	Wife's name	
14	Wife's maiden name	
15	Wife's date of birth	
16	Wife's place of birth	
17	Wife's residence - street	
18	Wife's residence - city	
19	Wife's residence - inside city limits	Added
20	Wife's residence - county	
21	Wife's residence - state	
22	Place of marriage - county	
23	Place of marriage - state	
24	Date of marriage	
25	Number of children of this marriage	Name change
26	Petitioner	Delete check boxes
27	Name of petitioner's attorney/pro se	
28	Petitioner's address	
29	Husband's Social Security number	
30	Wife's Social Security number	
	Date couple last resided in same household	Delete
	Number of children under 18 whose physical custody was awarded to	Delete
	Title of court	Delete
	Title of certifying official	Delete
	Date signed	Delete
	Confidential information	Delete

[Statutory Authority: RCW 43.70.150, 70.58.055, and chapter 70.58 RCW. 02-20-092, § 246-491-149, filed 10/1/02, effective 11/1/02. Statutory

Authority: RCW 43.70.150. 91-23-026 (Order 211), § 246-491-149, filed 11/12/91, effective 12/13/91. Statutory Authority: RCW 43.70.040. 91-02-049 (Order 121), recodified as § 246-491-149, filed 12/27/90, effective 1/31/91. Statutory Authority: RCW 43.20A.620. 88-19-034 (Order 2696), § 248-124-160, filed 9/12/88.]

WAC 246-491-990 Vital records fees. The department shall collect fees to cover program costs as follows:

(1) To prepare a sealed file following amendment of the original vital record	$15.00
(2) To review a sealed file	$15.00

(3) The director of the division of health may enter into agreements with state and local government agencies to establish alternate fee schedules and payment arrangements for reimbursement of these program costs.

[Statutory Authority: RCW 43.70.040. 91-02-049 (Order 121), recodified as § 246-491-990, filed 12/27/90, effective 1/31/91. Statutory Authority: RCW 26.33.330. 88-15-011 (Order 2650), § 440-44-095, filed 7/8/88; 85-04-023 (Order 2199), § 440-44-095, filed 1/30/85.]

Chapter 246-500 WAC
HANDLING OF HUMAN REMAINS

WAC

246-500-010	Definitions.
246-500-020	Contact with human remains.
246-500-030	Refrigeration or embalming of human remains.
246-500-040	Transportation of human remains.
246-500-050	Cremated human remains.
246-500-060	Authority of the local health officer.

WAC 246-500-010 Definitions. (1) "Barrier precaution" means protective attire, equipment, or other physical barriers worn to protect or prevent exposure of skin and mucous membranes of the wearer to infected or potentially infected blood, tissue, and body fluids.

(2) "Burial transit permit" means a form, approved and supplied by the state registrar of vital statistics as described in chapter 70.58 RCW, identifying the name of the deceased, date and place of death, general information, disposition and registrar and sexton information.

(3) "Coroner" means the county official as described under chapter 36.24 RCW and RCW 36.16.030.

(4) "Department" means the Washington state department of health.

(5) "Embalmer" means a person defined and licensed under chapter 18.39 RCW.

(6) "Funeral establishment" means a place of business defined and licensed under chapter 18.39 RCW.

(7) "Funeral director" means a person defined and licensed under chapter 18.39 RCW.

(8) "Health care provider" means any person having direct or supervisory responsibility for the delivery of health care, including persons credentialed in Washington state under Title 18 RCW and military personnel providing health care within Washington state regardless of licensure.

(9) "Human remains" or "remains" means the body of a deceased person, in any stage of decomposition, and includes cremated human remains, but excludes archaeological resources under chapter 27.53 RCW.

(10) "Local health officer" means a licensed physician defined and appointed under RCW 70.05.050.

(11) "Local registrar of vital statistics" means the local health officer or administrator who registers certificates of birth and death occurring in his or her designated registration district under chapter 70.58 RCW.

(12) "Medical examiner" means a physician appointed by the county legislative authority to replace the coroner under RCW 36.24.190.

(13) "Refrigerate" means:

(a) Placing in a mechanically cooled unit maintained at a maximum temperature of 48°F in a licensed funeral establishment; or

(b) Placing in a mechanically cooled unit maintained at a maximum temperature of 48°F or packing with dry ice or leak-resistant sealed ice packs outside of a funeral establishment.

[Statutory Authority: RCW 43.20.050 and 18.39.215. 06-17-182, § 246-500-010, filed 8/23/06, effective 9/23/06.]

WAC 246-500-020 Contact with human remains. (1) Funeral directors, embalmers, medical examiners, coroners, health care providers, and others directly handling or touching human remains must:

(a) Wash hands and other exposed skin surfaces with soap and water or equivalent immediately and thoroughly after contact with human remains, blood, or body fluids;

(b) Use barrier precautions if a procedure involves potential contact with blood, body fluids, or internal tissues of the deceased;

(c) Not eat, drink, or smoke in areas where handling of human remains or body fluids takes place;

(d) Use reasonable precautions to prevent spillage of body fluids during transfer and transport of human remains including, when necessary:

(i) Containing, wrapping, or pouching with materials appropriate to the condition of the human remains; and

(ii) Obtaining approval from the coroner or medical examiner prior to pouching any human remains under their jurisdiction;

(e) Wash hands immediately after gloves are removed;

(f) Take precautions to prevent injuries by needles, scalpels, instruments, and equipment during use, cleaning, and disposal;

(g) Properly disinfect or discard protective garments and gloves immediately after use;

(h) Properly disinfect all surfaces, instruments, and equipment after contact with human remains, blood, or body fluids;

(i) Provide appropriate means for disposing of body fluids, blood, tissues, and wastes or for retaining them for final disposition with the body.

(i) All autopsy rooms, morgues, preparation rooms, and other places where human remains are handled must be equipped with impervious containers with disposable, impervious liners and tightly fitting closures.

(ii) Body fluids, blood, tissues, and wastes removed from human remains must be kept with the body or disposed in accordance with local ordinances and other applicable laws and rules for infectious waste.

(iii) A sewage system approved by the local health officer or the department may be used for the disposal of blood and other body fluids.

(iv) All containers and liners used to receive solid or fluid materials removed from human remains must be cleaned and disinfected immediately after use, interred with the body, or disposed in accordance with local ordinances and other applicable laws and rules for infectious waste.

(2) Persons responsible for transfer or transport of human remains must clean and disinfect equipment and the vehicle if soiled with body fluids or any other portion of human remains.

[Statutory Authority: RCW 43.20.050 and 18.39.215. 06-17-182, § 246-500-020, filed 8/23/06, effective 9/23/06.]

WAC 246-500-030 Refrigeration or embalming of human remains. (1) Funeral directors, embalmers, and others assisting in the preparation of human remains for final disposition must refrigerate or embalm the remains upon receipt.

(2) Funeral directors, embalmers, and others assisting in the preparation of human remains for final disposition may delay refrigeration upon receipt or remove human remains from refrigeration for the following activities:

(a) Embalming;

(b) Transporting;

(c) Cremating or burying;

(d) Viewing for identification for a period of time not to exceed one hour by a person able to identify the deceased;

(e) Washing, anointing, clothing, praying over, reading to, singing to, sitting with, guarding, viewing, or otherwise accompanying the deceased for a period of time not to exceed twenty-four hours by persons acting according to the directions of the deceased or the person having the right to control the disposition of the remains under RCW 68.50.160, provided that anyone directly touching the remains uses barrier precautions according to requirements under WAC 246-500-020 (1)(b); or

(f) As otherwise approved by the local health officer after evaluating specific circumstances, the need to protect public health, and recognition of religious beliefs.

(3) A funeral director, embalmer, or other person assisting in the preparation of human remains for final disposition must prohibit activities otherwise allowed under subsection (2)(e) of this section if informed by a local health officer or medical examiner that such activities would pose a direct threat to human health.

(4) Nothing in this section restricts the authority of a coroner or medical examiner when human remains are under his or her jurisdiction in accordance with RCW 68.50.010.

[Statutory Authority: RCW 43.20.050 and 18.39.215. 06-17-182, § 246-500-030, filed 8/23/06, effective 9/23/06.]

WAC 246-500-040 Transportation of human remains. (1) Persons who transport human remains must:

(a) Use effective hygienic measures consistent with handling potentially infectious material; and

(b) Obtain a burial-transit permit from the local health officer or local registrar of vital statistics or file a notice of removal according to requirements of RCW 70.58.230 prior to transporting human remains from one registration district to another.

(2) Prior to transporting human remains by common carrier, the persons responsible for preparing and handling the remains must:

(a) Enclose the human remains in a leak-resistant container placed inside another leak-resistant, securely constructed shipping container to prevent the release of all body fluids;

(b) Obtain and enclose the burial-transit permit in a sturdy envelope; and

(c) Attach the burial-transit permit to the shipping container.

(3) Persons responsible for human remains routed to the point of final destination on a burial-transit permit:

(a) May temporarily hold the remains at a stopover point within the state of Washington for funeral or other purposes without an additional permit; and

(b) Must surrender the burial-transit permit to the sexton or crematory official at the point of interment or cremation.

(4) Sextons and cremation officials shall accept the burial-transit permit as authority for interment in a cemetery or for cremation within the state of Washington.

[Statutory Authority: RCW 43.20.050 and 18.39.215. 06-17-182, § 246-500-040, filed 8/23/06, effective 9/23/06.]

WAC 246-500-050 Cremated human remains. (1) Other than the provisions in this section, this chapter does not apply to human remains after cremation.

(2) A local registrar, in cooperation with the Washington state cemetery board, may issue a permit for disposition of cremated human remains. The permit for the disposition of cremated remains may be used in connection with the transportation of cremated remains by common carrier or other means.

(3) The local registrar or the department of health may issue a permit for the disposition of cremated human remains which have been in the lawful possession of any person, firm, corporation, or association for a period of ninety days or more. This permit will specify that the disposition of cremated remains must be consistent with Washington state laws and rules.

[Statutory Authority: RCW 43.20.050 and 18.39.215. 06-17-182, § 246-500-050, filed 8/23/06, effective 9/23/06.]

WAC 246-500-060 Authority of the local health officer. To protect public health and respond to emergency situations, the local health officer may:

(1) Impose additional requirements for the handling, care, transport, or disposition of human remains; or

(2) Suspend any requirements of this chapter.

[Statutory Authority: RCW 43.20.050 and 18.39.215. 06-17-182, § 246-500-060, filed 8/23/06, effective 9/23/06.]

Chapter 246-560 WAC
RURAL HEALTH SYSTEM PROJECT

WAC

246-560-001 Purpose.
246-560-002 Implementation.
246-560-010 Definitions.

246-560-011 Activities.
246-560-025 Requests to receive information.
246-560-035 Eligibility.
246-560-040 Letters of interest.
246-560-045 Letter of interest review and action.
246-560-050 Criteria for inviting applications.
246-560-060 Application content.
246-560-065 Application screening criteria.
246-560-075 Reviewer selection.
246-560-077 Application review, selection, and funding.
246-560-085 Appeal process.

DISPOSITION OF SECTIONS FORMERLY CODIFIED IN THIS CHAPTER

246-560-015 Implementation. [Statutory Authority: Chapter 70.175 RCW. 91-16-108 (Order 186), § 246-560-015, filed 8/7/91, effective 9/7/91.] Repealed by 97-20-101, filed 9/29/97, effective 10/30/97. Statutory Authority: RCW 43.70.040.

246-560-020 Review process. [Statutory Authority: Chapter 70.175 RCW. 91-16-108 (Order 186), § 246-560-020, filed 8/7/91, effective 9/7/91.] Repealed by 97-20-101, filed 9/29/97, effective 10/30/97. Statutory Authority: RCW 43.70.040.

246-560-030 Time schedule. [Statutory Authority: Chapter 70.175 RCW. 91-16-108 (Order 186), § 246-560-030, filed 8/7/91, effective 9/7/91.] Repealed by 97-20-101, filed 9/29/97, effective 10/30/97. Statutory Authority: RCW 43.70.040.

246-560-070 Selection criteria for funded demonstration projects. [Statutory Authority: Chapter 70.175 RCW. 91-16-108 (Order 186), § 246-560-070, filed 8/7/91, effective 9/7/91.] Repealed by 99-03-043, filed 1/14/99, effective 2/14/99. Statutory Authority: RCW 70.175.010 - [70.175.]090 and 70.185.030 - [70.185.]080.

246-560-080 Selection criteria for assisted demonstration projects. [Statutory Authority: Chapter 70.175 RCW. 91-16-108 (Order 186), § 246-560-080, filed 8/7/91, effective 9/7/91.] Repealed by 97-20-101, filed 9/29/97, effective 10/30/97. Statutory Authority: RCW 43.70.040.

246-560-090 Issuance of contracts. [Statutory Authority: Chapter 70.175 RCW. 91-16-108 (Order 186), § 246-560-090, filed 8/7/91, effective 9/7/91.] Repealed by 97-20-101, filed 9/29/97, effective 10/30/97. Statutory Authority: RCW 43.70.040.

246-560-100 Use of project funds. [Statutory Authority: Chapter 70.175 RCW. 91-16-108 (Order 186), § 246-560-100, filed 8/7/91, effective 9/7/91.] Repealed by 97-20-101, filed 9/29/97, effective 10/30/97. Statutory Authority: RCW 43.70.040.

246-560-105 Continuation funding. [Statutory Authority: Chapter 70.175 RCW. 91-16-108 (Order 186), § 246-560-105, filed 8/7/91, effective 9/7/91.] Repealed by 97-20-101, filed 9/29/97, effective 10/30/97. Statutory Authority: RCW 43.70.040.

246-560-110 Consultation. [Statutory Authority: Chapter 70.175 RCW. 91-16-108 (Order 186), § 246-560-110, filed 8/7/91, effective 9/7/91.] Repealed by 97-20-101, filed 9/29/97, effective 10/30/97. Statutory Authority: RCW 43.70.040.

246-560-120 Periodic reports. [Statutory Authority: Chapter 70.175 RCW. 91-16-108 (Order 186), § 246-560-120, filed 8/7/91, effective 9/7/91.] Repealed by 97-20-101, filed 9/29/97, effective 10/30/97. Statutory Authority: RCW 43.70.040.

WAC 246-560-001 Purpose. (1) The purpose of these rules is to implement RCW 70.175.010 through 70.175.090, and RCW 70.185.030 through 70.185.080. The Washington health systems resources program includes rural health systems development and community-based recruitment and retention. The health systems resources program was established to provide financial and technical assistance to promote affordable access to health care services in rural and urban underserved populations of the state.

(2) The goals of the health systems resources program are:

(a) To promote affordable access to health care services to residents in rural areas of Washington state.

(b) To assure the availability of health care providers to:

(i) Residents of rural areas; and

(ii) Urban underserved populations.

[Statutory Authority: RCW 70.175.010 - [70.175.]090 and 70.185.030 - [70.185.]080. 99-03-043, § 246-560-001, filed 1/14/99, effective 2/14/99. Statutory Authority: Chapter 70.175 RCW. 91-16-108 (Order 186), § 246-560-001, filed 8/7/91, effective 9/7/91.]

WAC 246-560-002 Implementation. The department may use the following methods to implement this chapter:

(1) Solicit and select projects as described in WAC 246-560-035 through 246-560-081.

(2) Offer, or contract for, services to carry out the purposes of this chapter.

[Statutory Authority: RCW 70.175.010 - [70.175.]090 and 70.185.030 - [70.185.]080. 99-03-043, § 246-560-002, filed 1/14/99, effective 2/14/99.]

WAC 246-560-010 Definitions. For the purpose of this chapter the following words and phrases have the following meanings unless the context clearly indicates otherwise.

(1) "Applicant" means any interested party who has been invited to submit an application proposing a health systems resources project.

(2) "Application" means an invited proposal for a health systems resources project.

(3) "Basic health care services" means organized care modalities to prevent death, disability, and serious illness. The term includes, but is not limited to:

(a) Emergency services;

(b) Primary care physicians, physician assistants, nurse practitioners, and midwifery services;

(c) Short term inpatient care;

(d) Home health care;

(e) Community based care for chronic conditions;

(f) Dental care;

(g) Vision care;

(h) Hearing care;

(i) Hospice care;

(j) Mental health;

(k) Necessary support services; and

(l) Nutrition related services.

(4) "Catchment area" means the Washington state geographic area where people live who are to receive the basic health care services addressed by the project.

(5) "Community" means the resident individuals and organizations in a catchment area who may benefit from the basic health care services addressed by the project.

(6) "Community-based" means that the need is identified by a broad section of the community including providers, institutions in the area, and nonhealth care provider members of the community such as community members of health care boards, economic development council members, organized patient advocacy groups, and others who have an interest in the long-term viability of health care services in the catchment area.

(7) "Department" means the Washington state department of health.

(8) "Deliverable" means a document that results from project activities. The term includes, but is not limited to:

(a) A form;

(b) An agreement;

(c) A plan;

(d) Documentation of numbers served;

(e) A report; or

(f) Presentation material.

(9) "Health care delivery system" means services, personnel, and how they are organized and financed.

(10) "Interested party" means an eligible entity that has submitted a letter of interest for a health systems resources project.

(11) "Letter of interest" means a brief description of a project as described in WAC 246-560-040.

(12) "Letter of invitation" means a letter inviting an interested party who has submitted a letter of interest to submit an application.

(13) "Local project administrator" means an individual or organization representing the applicant and authorized to enter into legal agreements on behalf of the applicant.

(14) "Matching funds" means fifty percent of the total budget for recruitment and retention activities must be from a source other than this program. Matching funds may be in-kind contributions.

(15) "Outcome" means the anticipated result or impact of the project activities.

(16) "Project" means a health systems resources project.

(17) "Rural" means a nonurbanized area.

(18) "Successful applicant" means an applicant whose project has been selected for contracting.

(19) "Urban underserved" means an urbanized area that has unmet health care needs.

(20) "Urbanized area" means an area defined and described as an urbanized or urban area by the United States Department of Census, Bureau of the Census.

(21) "Workplan" means a written document, usually in matrix form, that shows the detail of what is needed to complete a project. The activities, timeline, party responsible, budget, evaluation plan, and measurable outcome is shown for each deliverable.

[Statutory Authority: RCW 70.175.040 - [70.175.]050 and 70.185.040 - [70.185.]050. 09-01-053, § 246-560-010, filed 12/10/08, effective 1/10/09. Statutory Authority: RCW 70.175.010 - [70.175.]090 and 70.185.030 - [70.185.]080. 99-03-043, § 246-560-010, filed 1/14/99, effective 2/14/99. Statutory Authority: Chapter 70.175 RCW. 91-16-108 (Order 186), § 246-560-010, filed 8/7/91, effective 9/7/91.]

WAC 246-560-011 Activities. (1) Health systems development activities include:

(a) The planning, development, and/or implementation of the infrastructure needed to support a cost effective health care delivery system. Examples of infrastructure development include:

(i) Telemedicine and other communications systems;

(ii) Modeling of managed care systems;

(iii) Financial business systems;

(iv) Clinical and quality assurance systems;

(v) Development of cooperative agreements and referral arrangements between similar or dissimilar entities to ensure easy transition between care levels for patients and their families; and

(vi) Development of networks of providers and others, organized to share services, negotiate contracts and, plan new services or service delivery systems.

(b) The mobilization of community leaders to design, develop, and implement a project to maintain or improve the viability of the local health care delivery system. Examples of community mobilization include:

(i) Leaders from different governmental jurisdictions evaluate the health care delivery system or parts of the system, determine where changes are needed, and develop a workplan to affect the necessary changes;

(ii) Participants in the health care delivery system determine how to pool resources to eliminate service duplication or gaps, or, to focus on new identified priorities; and

(iii) Participants in the health care delivery system determine how to restructure the system, including the necessary legal, regulatory, fiscal, or practice actions that will accomplish the needed change.

(c) The planning, development, or implementation of a new basic health care service to meet an identified gap in the health care delivery system. Examples of new service development include:

(i) A service previously unavailable in the service area; and

(ii) A service previously unavailable to a portion of the population in the service area.

(2) Recruitment and retention activities may be funded, only to the extent that matching funds are provided. They include, but are not limited to:

(a) An assessment of community characteristics or assets, including school systems, housing, churches, recreational, social and cultural opportunities;

(b) An assessment of the community, physicians and other health care providers, community leaders and citizens about the need for new or replacement health care providers;

(c) A staff development plan;

(d) A recruitment plan;

(e) A recruitment and retention financial plan;

(f) A plan for providing a new practitioner with sufficient professional, intellectual and emotional support;

(g) A plan for call coverage to ensure adequate time off for personal and family pursuits;

(h) An assessment of office and hospital facilities, equipment and support personnel to determine if they are adequate to allow a new practitioner to practice in a high-quality manner; and

(i) A retention plan.

[Statutory Authority: RCW 70.175.010 - [70.175.]090 and 70.185.030 - [70.185.]080. 99-03-043, § 246-560-011, filed 1/14/99, effective 2/14/99.]

WAC 246-560-025 Requests to receive information. Any interested party may be placed on the health systems resources mailing list maintained by the Department of Health, Office of Community and Rural Health, or its successor, P.O. Box 7834, Olympia, WA 98504-7834. Contacts on the mailing list will receive instructions for the next funding cycle.

[Statutory Authority: RCW 70.175.010 - [70.175.]090 and 70.185.030 - [70.185.]080. 99-03-043, § 246-560-025, filed 1/14/99, effective 2/14/99.]

WAC 246-560-035 Eligibility. (1) An interested party, may be a for-profit, not-for-profit, or governmental entity which is:

(a) Proposing services benefiting the population in a rural catchment area; and/or

(b) Proposing services benefiting an urban underserved area and including recruitment and retention activities.

(2) The majority of basic health services addressed by the project must be provided to people living in Washington state.

[Statutory Authority: RCW 70.175.010 - [70.175.]090 and 70.185.030 - [70.185.]080. 99-03-043, § 246-560-035, filed 1/14/99, effective 2/14/99.]

WAC 246-560-040 Letters of interest. An interested party must submit a letter of interest to be considered for a health systems resources project. The department may solicit letters of interest.

The letter of interest must:

(1) Not exceed three pages;

(2) Include the applicant name and address;

(3) Briefly describe the catchment area and the community;

(4) Identify the health systems resources program goal(s) addressed by the project;

(5) Identify the health care problem;

(6) Briefly describe proposed activities and the anticipated outcome;

(7) Identify key health care providers, business representatives, public officials, and community leaders to be involved in the project; and

(8) Indicate projected total project costs and the amount of state funding requested. If the project includes recruitment and retention activities, indicate the source or sources of matching funds.

[Statutory Authority: RCW 70.175.010 - [70.175.]090 and 70.185.030 - [70.185.]080. 99-03-043, § 246-560-040, filed 1/14/99, effective 2/14/99. Statutory Authority: Chapter 70.175 RCW. 91-16-108 (Order 186), § 246-560-040, filed 8/7/91, effective 9/7/91.]

WAC 246-560-045 Letter of interest review and action. (1) Reviewers shall score letters of interest independently using a scoring system established by the department, which is incorporated by reference.

(2) Copies of the scoring system may be requested by writing to the Washington State Department of Health, Office of Community and Rural Health, P.O. Box 47834, Olympia, Washington 98504-7834.

(3) The director of the office of community and rural health shall make the final decision regarding letters of interest based on letter of interest scores and the best utilization of resources to promote the goals of the program.

(4) The department will send a written response to all interested parties who submit a letter of interest.

(5) The department may invite applications from some, none, or all of the interested parties who submit a letter of interest.

(a) The invitation will include:

(i) Application content outline;

(ii) Directions for completing applications; and

(iii) Any letter of interest review comments to be addressed in the application.

(b) The department may request combining activities proposed by different interested parties for inclusion in a single application to:

(i) Avoid duplication;

(ii) Increase cooperation; or

(iii) Strengthen the overall health care delivery system serving the catchment area.

(c) The department will set a due date for receipt of applications.

[Statutory Authority: RCW 70.175.010 - [70.175.]090 and 70.185.030 - [70.185.]080. 99-03-043, § 246-560-045, filed 1/14/99, effective 2/14/99.]

WAC 246-560-050 Criteria for inviting applications. (1) The project addresses at least one of the goals of the health systems resources program, as described in WAC 246-560-001.

(2) The project addresses needed improvements in the delivery of basic health care services, including preventive services.

(3) The project reflects a cooperative approach, which may involve several organizations, categories of health care providers, or communities.

(4) The project can serve as a model for other communities.

(5) The project reflects priorities established for a particular funding cycle as set forth in the application materials.

(6) The project addresses access to basic health care services in an area where access is severely limited or inadequate; and

(7) If recruitment and retention of providers is identified as an outcome the application demonstrates:

(a) Recruitment and retention problems have been chronic; or

(b) The community is in need of primary care practitioners; or

(c) The community has unmet health care needs for specific target populations; and

(d) There is a fifty percent local funding match.

[Statutory Authority: RCW 70.175.010 - [70.175.]090 and 70.185.030 - [70.185.]080. 99-03-043, § 246-560-050, filed 1/14/99, effective 2/14/99. Statutory Authority: Chapter 70.175 RCW. 91-16-108 (Order 186), § 246-560-050, filed 8/7/91, effective 9/7/91.]

WAC 246-560-060 Application content. (1) A completed face sheet.

(2) A description of the applicant and its capacity to manage and oversee the project.

(3) A description of the proposed project including:

(a) Health systems resources program goal(s) addressed; and

(b) Health systems resources program priority addressed.

(4) A statement of the problem, including:

(a) The duration of the problem or deficiency;

(b) The number of people affected;

(c) How the problem has been documented;

(d) The community involvement in identifying the problem; and

(e) Special needs of the population to be served.

(5) A description of the catchment area(s) to be served by the project. The catchment area(s) must be a reasonable service delivery area such that:

(a) Geographic conditions, health care delivery patterns, other social and economic relationship patterns, and population characteristics make it a reasonable market; or

(b) Residents are likely to go to the proposed catchment area as a preferred source for the proposed services.

(6) A description of any model(s) used in the proposed project.

(7) A description of the relationship between the proposed project and current or previous programs designed to solve related health care problems in the catchment area.

(8) A description of the other individuals and entities involved in the project and their relationship with the applicant to implement the project. A copy of an organizational chart for the proposed project, lists of roles and responsibilities, or other items that document the relationship between the applicant and the involved activities may be submitted with the application.

(9) A workplan for what is needed to accomplish the project. For all major activities, include a timeline, entity responsible, funds needed and source of funds, and measurable outcome(s).

(10) A description of the evaluation process including measurable outcomes.

(11) A description of the plan for dissemination of information about the project.

(12) A detailed budget and budget justification for the project period, including:

(a) The amount of state funds requested;

(b) The amount, by source, of other financial or in-kind support and evidence of cost participation by the applicant and other entities involved in the project; if the application includes recruitment and retention activities, amounts by source(s) of matching funds must be identified;

(c) The steps required to financially sustain the project activities after state support had ended.

(13) Letters of agreement, support, commitment and contribution from each entity identified as participating in the project.

(14) Any additional information requested by the department in the letter of invitation.

[Statutory Authority: RCW 70.175.010 - [70.175.]090 and 70.185.030 - [70.185.]080. 99-03-043, § 246-560-060, filed 1/14/99, effective 2/14/99. Statutory Authority: Chapter 70.175 RCW. 91-16-108 (Order 186), § 246-560-060, filed 8/7/91, effective 9/7/91.]

WAC 246-560-065 Application screening criteria. (1) The department will screen applications for the following criteria:

(a) Received in the Office of Community and Rural Health, P.O. Box 47834, Olympia, Washington 98504-7834, on or before the due date.

(b) One original application and two unbound copies provided, sufficiently legible to be copied. The department will determine legibility; and

(c) Application contains each of the items described in WAC 246-560-060.

(2) Applications that contain all screening criteria will be reviewed.

(3) If an application fails to contain any screening criterion, it will not be reviewed. The applicant will be notified in writing.

[Statutory Authority: RCW 70.175.010 - [70.175.]090 and 70.185.030 - [70.185.]080. 99-03-043, § 246-560-065, filed 1/14/99, effective 2/14/99.]

WAC 246-560-075 Reviewer selection. The department may consider the input of individuals outside the department who have expertise with rural and underserved communities. Selected reviewers must sign a statement:

(1) Agreeing to refrain from discussion of letters of interest or applications outside of the review process; and

(2) Asserting that they do not have a conflict of interest. A conflict of interest includes a reviewer:

(a) Holding a position in an organization under review;

(b) Having a significant financial interest in the outcome of the review; or

(c) Participating in the development of the letter of interest or application under review.

[Statutory Authority: RCW 70.175.010 - [70.175.]090 and 70.185.030 - [70.185.]080. 99-03-043, § 246-560-075, filed 1/14/99, effective 2/14/99.]

WAC 246-560-077 Application review, selection, and funding. (1) The department may, based on reviewer recommendations, funding limitations, or other considerations, offer funding to all, some or none of the applicants, and may offer to fund portions of projects.

(2) Reviewers shall score applications independently using a scoring system established by the department which is incorporated by reference.

(3) Copies of the scoring system may be requested by writing to the Washington State Department of Health, Office of Community and Rural Health, P.O. Box 47834, Olympia, Washington 98504-7834.

(4) The director of the office of community and rural health shall make the final decision regarding funding based on application scores, total funds available, and the best utilization of resources to promote the goals of the program.

[Statutory Authority: RCW 70.175.010 - [70.175.]090 and 70.185.030 - [70.185.]080. 99-03-043, § 246-560-077, filed 1/14/99, effective 2/14/99.]

WAC 246-560-085 Appeal process. (1) The following departmental actions are subject to administrative appeal:

(a) A decision not to invite an application;

(b) A determination that an application does not meet initial screening criteria and will not be reviewed; or

(c) A decision not to fund all or any portion of a project.

(2) The appeal process is governed by the Administrative Procedure Act (chapter 34.05 RCW), chapter 246-10 WAC, and this chapter.

(3) To initiate an appeal, the applicant must file a written request for an adjudicative proceeding within twenty-eight days of receipt of the department's decision. The request shall be mailed, by a method showing proof of receipt, to the Adjudicative Clerk Office, P.O. Box 47879, 2413 Pacific Avenue, Olympia, Washington 98504-7879.

(4) The request must contain:

(a) A specific statement of the issue or issues and law involved;

(b) The grounds for contesting the department's decision; and

(c) A copy of the department's decision.

[Statutory Authority: RCW 70.175.010 - [70.175.]090 and 70.185.030 - [70.185.]080. 99-03-043, § 246-560-085, filed 1/14/99, effective 2/14/99.]

Chapter 246-562 WAC
PHYSICIAN VISA WAIVERS

WAC

246-562-010	Definitions.
246-562-020	Authority to sponsor visa waivers.
246-562-040	Principles that will be applied to the visa waiver program.
246-562-050	Review criteria.
246-562-060	Criteria for applicants.
246-562-070	Criteria for the proposed practice location to be served by the physician.
246-562-075	Criteria for waiver sponsorships in nondesignated shortage areas.
246-562-080	Criteria for the physician.
246-562-085	Eligibility for primary care and specialist waivers.
246-562-087	Eligibility for facilities hiring physicians as hospitalists.
246-562-090	Application form.
246-562-100	Criteria applied to federally designated facilities.
246-562-110	Waiver requests federal waiver programs.
246-562-120	Department review and action.
246-562-130	Eligibility for future participation in the visa waiver program.
246-562-140	Department's responsibility to report to the U.S. Department of State and the United States Bureau of Citizenship and Immigration Services.
246-562-150	Appeal process.
246-562-160	Implementation.

WAC 246-562-010 Definitions. The following definitions apply in the interpretation and implementation of these rules.

(1) "Applicant" means a health care facility that seeks to employ a physician and is requesting state sponsorship or concurrence of a visa waiver.

(2) "Department" means the department of health.

(3) "Board eligible" means having satisfied the requirements necessary to sit for board examinations.

(4) "Employment contract" means a legally binding agreement between the applicant and the physician named in the visa waiver application which contains all terms and conditions of employment, including, but not limited to, the salary, benefits, length of employment and any other consideration owing under the agreement.

(5) "Full time" means a minimum forty hours of medical practice per week, not including call coverage, consisting of at least thirty-two hours seeing patients on an ambulatory or in-patient basis and may include up to eight hours administrative work for at least forty-eight weeks per year.

(6) "Health care facility" means an entity with an active Washington state business license doing business or proposing to do business in the practice location where the physician would be employed, whose stated purposes include the delivery of medical care.

(7) "Health professional shortage area" (HPSA) means an area federally designated as having a shortage of primary care physicians or mental health care.

(8) "Hospitalist" means a physician, usually an internist, who specializes in the care of hospitalized patients.

(9) "Low income" means that a family's total household income is less than two hundred percent of the federal poverty level as defined by the *U.S. Federal Poverty Guidelines* published annually.

(10) "Medically underserved area" (MUA) means a federally designated area based on whether the area exceeds a score for an Index of Medical Underservice, a value based on infant mortality, poverty rates, percentage of elderly and primary care physicians to population ratios.

(11) "Physician" means the foreign physician, named in the visa waiver application, who requires a waiver to remain in the United States to practice medicine.

(12) "Primary care physician" means a physician board certified or board eligible in family practice, general internal medicine, pediatrics, obstetrics/gynecology, geriatric medicine or psychiatry. Physicians who have completed any subspecialty or fellowship training, excluding OB training, are not considered primary care physicians for the purpose of this chapter.

(13) "Sliding fee discount schedule" means a written delineation documenting the value of charge discounts granted to patients based upon financial hardship.

(14) "Specialist" means a physician board certified or board eligible in a specialty other than family practice, general internal medicine, pediatrics, obstetrics/gynecology, geriatric medicine or psychiatry (the current definition of "primary care" for the waiver program).

(15) "Sponsorship" means a request by the department on behalf of a health care facility to federal immigration authorities to grant a visa waiver for the purpose of recruiting and retaining physicians.

(16) "Visa waiver" means a federal action that waives the requirement for a foreign physician, in the United States on a J-1 visa, to return to his/her home country for a two-year period following medical residency training.

(17) "Vacancy" means a full-time physician practice opportunity that is based on a planned retirement, a loss of an existing physician, or an expansion of physician services in the service area.

[Statutory Authority: Chapter 70.185 RCW and Public Law 108-441. 06-07-035, § 246-562-010, filed 3/8/06, effective 4/8/06. Statutory Authority: Chapter 70.185 RCW. 03-19-054, § 246-562-010, filed 9/11/03, effective 10/12/03; 00-15-082, § 246-562-010, filed 7/19/00, effective 8/19/00; 98-20-067, § 246-562-010, filed 10/2/98, effective 11/2/98.]

WAC 246-562-020 Authority to sponsor visa waivers. (1) The department of health may assist communities to recruit and retain physicians, or other health care professionals, as directed in chapter 70.185 RCW, by exercising an option provided in federal law, 8 U.S.C. Sec. 1184(l) as amended by Public Law 108-441 and 22 C.F.R. 514.44(e). This option allows the department of health to sponsor a limited number of visa waivers each federal fiscal year if certain conditions are met.

(2) The department may acknowledge sponsorship proposed by federal agencies, including the United States Department of Health and Human Services.

(3) The department may carry out a visa waiver program, or, in the event of resource limitations or other considerations, may discontinue the program. Purposes of the program are:

(a) To increase the availability of physician services in existing federally designated shortage areas for health care facilities that have long standing vacancies;

(b) To improve access to physician services for communities and specific underserved populations that are having difficulty finding physician services;

(c) To serve Washington communities which have identified a physician currently holding a J-1 visa as an ideal candidate to meet the community's need for primary health care services or specialist services as allowed by WAC 246-562-080.

(4) The department may only sponsor a visa waiver request when:

(a) The application contains all of the required information and documentation;

(b) The application meets the criteria contained in chapter 246-562 WAC.

(5) The department will limit its activities:

(a) Prior to submission of an application, the department may provide information on preparing a complete application;

(b) For applicants that have benefited from department sponsorship previously, the applicant's history of compliance will be a consideration in future sponsorship decisions;

(c) Because the number of sponsorships the department may provide is limited, and because the number of shortage areas is great, sponsorship will be limited. In any single program year, a health care facility in any one designated health professional shortage area or medically underserved area:

(i) Will not be allotted more than two sponsorships;

(ii) Will not be allotted more than one specialist sponsorship as allowed by WAC 246-562-080(4); and

(iii) Will not be allotted more than one hospitalist sponsorship per hospital;

(d) In any given program year twenty of the federally allocated sponsorships will be allotted for primary care physicians and ten of the federally allocated sponsorships will be allotted for specialists through March 31. Any waiver sponsorships that remain unfilled on April 1 of each program year will be available to:

(i) Both primary care and specialist physicians consistent with the provisions of this chapter; and

(ii) Physicians intending to practice in nondesignated shortage areas in health care facilities that meet the criteria in WAC 246-562-075.

[Statutory Authority: Chapter 70.185 RCW and Public Law 108-441. 06-07-035, § 246-562-020, filed 3/8/06, effective 4/8/06. Statutory Authority: Chapter 70.185 RCW. 03-19-054, § 246-562-020, filed 9/11/03, effective 10/12/03; 00-15-082, § 246-562-020, filed 7/19/00, effective 8/19/00; 98-20-067, § 246-562-020, filed 10/2/98, effective 11/2/98.]

WAC 246-562-040 Principles that will be applied to the visa waiver program. (1) The visa waiver program is considered a secondary source for recruiting qualified physicians. It is not a substitute for broad recruiting efforts for graduates from U.S. medical schools.

(2) Sponsorship may be offered to health care facilities that can provide evidence of sustained active recruitment for the vacancy in the practice location with a physician who has specific needed skills.

(3) Sponsorship is intended to support introduction of physicians into practice settings that promote continuation of the practice beyond the initial contract period.

(4) Sponsorship will be for an employment situation where there is community support and a collegial professional environment.

(5) The visa waiver program will be used to assist health care facilities that provide care to all residents of the federally designated under-served area. When a federal designation is for an under-served population, the health care facility must provide care to the under-served population.

(6) Sponsorship is available to health care facilities that can document the provision of needed services, regardless of public or private ownership.

[Statutory Authority: Chapter 70.185 RCW. 98-20-067, § 246-562-040, filed 10/2/98, effective 11/2/98.]

WAC 246-562-050 Review criteria. Applicants and physicians must meet the criteria established in 8 U.S.C. 1184(l) as amended by Public Law 108-441 and 22 C.F.R. Sec. 514.44(e) which are incorporated by reference. Copies of these provisions may be requested from the department by writing to the Washington State Department of Health, Office of Community and Rural Health, Visa Waiver Program, PO Box 47834, Olympia, WA 98504-7834.

The criteria set out in chapter 246-562 WAC must also be met.

[Statutory Authority: Chapter 70.185 RCW and Public Law 108-441. 06-07-035, § 246-562-050, filed 3/8/06, effective 4/8/06. Statutory Authority: Chapter 70.185 RCW. 03-19-054, § 246-562-050, filed 9/11/03, effective 10/12/03; 98-20-067, § 246-562-050, filed 10/2/98, effective 11/2/98.]

WAC 246-562-060 Criteria for applicants. (1) Applicants must be existing health care facilities that:

(a) Are licensed to do business in Washington state; and

(b) Have provided medical care in Washington state for a minimum of twelve months prior to submitting the application.

(2) Applicants may be for-profit, nonprofit, or government organizations.

(3) Except for state institutional and correctional facilities designated as federal shortage areas, the applicant must:

(a) Currently serve:

(i) Medicare clients;

(ii) Medicaid clients;

(iii) Low-income clients, such as subsidized basic health plan enrollees;

(iv) Uninsured clients; and

(v) The population of the federal designation.

(b) Demonstrate that during the twelve months prior to submitting the application, the health care facility was providing a minimum of ten percent of the applicant's total patient visits to medicaid clients, and/or other low-income clients.

(c) Agree to implement a sliding fee discount schedule for the physician named in the J-1 visa waiver application. The schedule must be:

(i) Available in the client's principal language and English; and

(ii) Posted conspicuously; and

(iii) Distributed in hard copy to individuals making or keeping appointments with that physician.

(4) Applicants must provide documentation demonstrating that the employer made a good faith effort to recruit a qualified graduate of a United States medical school for a physician vacancy in the same salary range. Active recruitment, specific to the location and physician specialty, must be for a period of not less than six months in the twelve months prior to submitting a visa waiver application to the department. Active recruitment documentation can include one or more of the following:

(a) Listings in national publications;

(b) Web-based advertisements;

(c) Statewide newspaper advertisements;

(d) Contractual agreement with a recruiter or recruitment firm; or

(e) Listing the position with the office of community and rural health, recruitment and retention program.

In-house job postings and word-of-mouth recruitment are not considered active recruitment for the purpose of the J-1 physician visa waiver program; however, they can be used in addition to the methods described in (a) through (e) of this subsection.

(5) Applicants must have a signed employment contract with the physician. The employment contract must:

(a) Meet state and federal requirements throughout the period of obligation, regardless of physician's visa status;

(b) Not prevent the physician from providing medical services in the designated shortage area after the term of employment (i.e., no noncompete clauses);

(c) Specify the period of employment:

(i) Three years minimum for primary care sponsorship; or

(ii) Five years minimum for specialist sponsorship.

(6) Any amendments made to the required elements of the employment contract, subsection (5) of this section, during the first three years for primary care physicians or five years for nonprimary care specialist physicians of contracted employment must be reported to the department for review and approval. The department will complete review and approval of such amendments within thirty calendar days of receipt.

(7) Applicants must pay the physician prevailing wage as determined and approved by U.S. Department of Labor. Approval must be documented on a U.S. Department of Labor form ETA 9035 signed by an authorized official.

(8) If the applicant has previously requested sponsorship of a physician, WAC 246-562-020 will apply.

(9) If the applicant is not a publicly funded provider, additional criteria apply. The applicant must provide documentation of notification of intent to submit application for J-1 visa physician waiver to all publicly funded providers who provide medical care in HPSA or MUA designated area. Publicly funded providers include, but are not limited to, public hospital districts, local health departments, or community and/or migrant health centers.

Notification must:

(a) Be sent at least thirty days prior to submitting the application to the department;

(b) Include a statement giving the publicly funded providers thirty days to provide comment to the department regarding the J-1 physician visa application; and

(c) Provide the department's address.

(10) Applicants must submit status reports to the department every six months, with required supporting documentation, during the initial term of employment, three years for primary care physicians or five years for specialists.

(11) Applicants must cooperate in providing the department with clarifying information, verifying information already provided, or in any investigation of the applicant's financial status.

[Statutory Authority: Chapter 70.185 RCW and Public Law 108-441. 06-07-035, § 246-562-060, filed 3/8/06, effective 4/8/06. Statutory Authority: Chapter 70.185 RCW. 03-19-054, § 246-562-060, filed 9/11/03, effective 10/12/03; 00-15-082, § 246-562-060, filed 7/19/00, effective 8/19/00; 98-20-067, § 246-562-060, filed 10/2/98, effective 11/2/98.]

WAC 246-562-070 Criteria for the proposed practice location to be served by the physician. (1) The proposed practice location must be located in:

(a) A federally designated primary care health professional shortage area(s); or

(b) A federally designated mental health professional shortage area(s) for psychiatrists; or

(c) A federally designated whole-county medically underserved area(s); or

(d) A combination of federally designated areas.

(2) If the federal designation is based on a specific population, the health care facility must serve the designated population.

(3) If the practice location is in both a population designation area and a medically underserved area, the designated population must be served.

(4) If the practice location is not located in a federally designated shortage area or whole-county medically underserved area, the applicant must meet the criteria in WAC 246-562-075.

(5) The health care facility named in the visa waiver application may be an existing practice location or a new practice location. If a new practice location is planned, additional criteria apply. New practice locations must:

(a) Have the legal, financial, and organizational structure necessary to provide a stable practice environment, and must provide a business plan that supports this information;

(b) Support a full-time physician practice;

(c) Have written referral plans that describe how patients using the new primary care location will be connected to existing secondary and tertiary care if needed.

[Statutory Authority: Chapter 70.185 RCW and Public Law 108-441. 06-07-035, § 246-562-070, filed 3/8/06, effective 4/8/06. Statutory Authority: Chapter 70.185 RCW. 98-20-067, § 246-562-070, filed 10/2/98, effective 11/2/98.]

WAC 246-562-075 Criteria for waiver sponsorships in nondesignated shortage areas. Public Law 108-441 allows states to sponsor up to five waivers each program year for physicians who will practice medicine in a health care facility that is not located in a designated health professional shortage area but serves patients who reside in designated shortage areas. Waivers will not be open to physicians practicing in nondesignated shortage areas until April 1 of each

program year. For waiver approval, the health care facility must:

(1) **Provide care to patients who reside in designated shortage areas.**

(a) Describe the facility's service area.

(b) Provide a patient visit report that identifies total patient visits in last six months of service by patient origin zip code.

(2) **Describe who will benefit from the physician's services.**

(a) Identify the percentage of medicaid and medicare patients who will have access to this physician.

(b) Describe how the facility will assure access to this physician for low-income or uninsured patients.

(c) Explain if the physician has language skills that will benefit patients at this facility.

(3) **Provide a detailed report of the extensive recruitment efforts made to recruit a U.S. physician for the specific position that the J-1 physician will fill.**

(a) Explain why this physician is necessary at this location.

(b) Explain why it is difficult to recruit a U.S. physician for this location.

(c) Provide the number of physicians interviewed for this position.

(d) Provide the number of physicians offered this position.

[Statutory Authority: Chapter 70.185 RCW and Public Law 108-441. 06-07-035, § 246-562-075, filed 3/8/06, effective 4/8/06.]

WAC 246-562-080 Criteria for the physician. (1) The physician must not have a J-1 visa waiver pending for any other employment offer. Physicians must provide a letter attesting that no other applications are pending.

(2) Physicians must have the qualifications described in recruitment efforts for a specific vacancy.

(3) Physicians are considered eligible to apply for a waiver when:

(a) They have successfully completed their residency or fellowship program; or

(b) They are in the final year of a residency or fellowship program, and the physician provides a letter from their program that:

(i) Identifies the date the physician will complete the residency or fellowship program; and

(ii) Confirms the physician is in good standing with the program.

(4) Physicians must provide direct patient care.

(5) The physician must comply with all provisions of the employment contract.

(6) The physician must:

(a) Accept medicaid assignment; and

(b) Post and implement a sliding fee discount schedule; and

(c) Serve the low-income population; and

(d) Serve the uninsured population; and

(e) Serve the shortage designation population; or

(f) Serve the population of a local, state, or federal governmental institution or corrections facility as an employee of the institution.

(7) Physicians must have an active Washington state medical license. The applicant may substitute a copy of the license application and request an exception if the application for a Washington state medical license was submitted to the Washington state medical quality assurance commission four or more weeks prior to submission of the visa waiver application.

(8) Physicians must be an active candidate for board certification on or before the start date of employment.

(9) Physicians must provide the following documentation:

(a) A current Curriculum Vitae;

(b) U.S. Department of State Data Sheet, Form DS-3035;

(c) All DS-2019/IAP-66 Forms (Certificate of Exchange visitor status);

(d) Letter from residency program if applying as a primary care physician or from fellowship program if applying as a specialist that:

(i) Addresses the physician's interpersonal and professional ability to effectively care for diverse and low-income people in the United States; and

(ii) Describes an ability to work well with supervisory and subordinate medical staff, and adapt to the culture of United States health care facilities; and

(iii) Documents level of specialty training, if any; and

(iv) Is prepared on residency or fellowship program letterhead and is signed by residency or fellowship program staff or faculty; and

(v) Includes name, title, relationship to physician, address and telephone number of signatory.

(e) Physician attestation statement;

(f) No objection statement;

(g) Personal statement from physician regarding reason for requesting waiver;

(h) I-94 Entry and Departure cards; and

(i) G-28 from attorney, when applicable.

[Statutory Authority: Chapter 70.185 RCW and Public Law 108-441. 06-07-035, § 246-562-080, filed 3/8/06, effective 4/8/06. Statutory Authority: Chapter 70.185 RCW. 03-19-054, § 246-562-080, filed 9/11/03, effective 10/12/03; 02-19-084, § 246-562-080, filed 9/16/02, effective 10/17/02; 00-15-082, § 246-562-080, filed 7/19/00, effective 8/19/00; 98-20-067, § 246-562-080, filed 10/2/98, effective 11/2/98.]

WAC 246-562-085 Eligibility for primary care and specialist waivers. (1) **Primary care waivers.**

(a) Primary care waivers are available to the following physician specialties:

(i) Family medicine;

(ii) General internal medicine;

(iii) Pediatrics;

(iv) Geriatric medicine;

(v) Obstetrics and gynecology; or

(vi) Psychiatry and its subspecialties.

(b) Physicians who have completed any additional subspecialty training are not eligible for a primary care waiver, with the exception of geriatric medicine and psychiatry. Continuing medical education (CME) will not be considered subspecialty training for the purposes of this rule.

(2) **Specialist waivers.** Specialist waivers are available to nonprimary care physician specialties. Applicants submitting an application for a specialist physician must:

(a) **Demonstrate a need for the nonprimary care specialty by addressing one of the following need criteria:**

(i) The physician specialty is needed to meet state or federal health care facility regulations, for example to maintain the hospital trauma designation level.

(A) Identify the regulation; and

(B) Address how the facility is currently meeting this regulation.

(ii) The physician specialty is needed to address a major health problem in the facility service area.

(A) Identify the health problem and how this specialty will address it;

(B) Provide incident rates of the pathology and tie diagnosis codes to payer mix (i.e., how many patients are affected and how many are low-income or uninsured?); and

(C) If this specialty is not available in the community, identify the nearest location where this specialty service can be obtained.

(iii) The physician specialty is needed to address population-to-physician ratio because the current ratio does not meet national standards.

(A) Provide the population-to-physician ratio for the specialty, include source for data provided;

(B) Provide the number of physicians (FTE) practicing this specialty in the same health professional shortage area/facility service area;

(C) Provide the distance to the nearest physician practicing the same specialty; and

(D) Describe how the demand for the specialty has been handled in the past.

(b) **Describe the referral system that includes:**

(i) On-call sharing;

(ii) Affiliation agreements with other health care entities in the service area, specifically with publicly funded employers, such as public hospital districts, community health centers, local, state, or federal governmental institutions or correctional facilities, who have an obligation to provide care to underserved populations.

(c) **Provide at least one letter of support for this type of physician specialty** from a primary care provider practicing with publicly funded employers, such as public hospital districts, community health centers, local, state, or federal governmental institutions or correctional facilities, who have an obligation to provide care to underserved populations outside of the applicant's organization.

(d) Provide written notice to the department and all publicly funded providers in the health care facility's HPSA or MUA designated area **within thirty days** of the physician's start-date of employment. The notice must include:

(i) The physician's name, employment start date and practice location;

(ii) Services to be provided; and

(iii) Identification of accepted patients, such as medicaid, medicare, or basic health plan.

[Statutory Authority: Chapter 70.185 RCW and Public Law 108-441. 06-07-035, § 246-562-085, filed 3/8/06, effective 4/8/06.]

WAC 246-562-087 Eligibility for facilities hiring physicians as hospitalists. (1) A health care facility is limited to one hospitalist sponsorship per hospital per program year. Multiple employers at the same location are not allowed.

(2) A facility may only use inpatient data on the patient visit report required in WAC 246-562-060 to demonstrate that ten percent of applicant's total patient visits were to medicaid and/or other low-income patients.

(3) A facility must identify primary care physicians in the community who will accept unattached medicaid, medicare or uninsured patients for follow-up care.

[Statutory Authority: Chapter 70.185 RCW and Public Law 108-441. 06-07-035, § 246-562-087, filed 3/8/06, effective 4/8/06.]

WAC 246-562-090 Application form. (1) Physician visa waiver program application forms are available on-line at www.doh.wa.gov/hsqa/ocrh or may be requested from: Washington State Department of Health, Office of Community and Rural Health, Visa Waiver Program, PO Box 47834, Olympia, WA 98504-7834.

(2) Applications must be completed, address all state and federal requirements, and must include all required documents as specified in the application form.

[Statutory Authority: Chapter 70.185 RCW and Public Law 108-441. 06-07-035, § 246-562-090, filed 3/8/06, effective 4/8/06. Statutory Authority: Chapter 70.185 RCW. 98-20-067, § 246-562-090, filed 10/2/98, effective 11/2/98.]

WAC 246-562-100 Criteria applied to federally designated facilities. Local, state, or federal institutions that are federally designated with a facility designation may request state sponsorship. Physician services may be limited to the population of the institution. All other state and federal requirements must be met.

[Statutory Authority: Chapter 70.185 RCW. 98-20-067, § 246-562-100, filed 10/2/98, effective 11/2/98.]

WAC 246-562-110 Waiver requests federal waiver programs. In the event an applicant for a federal agency J-1 waiver submits a copy of an application to the department, the department will acknowledge receipt of the copy of the application.

[Statutory Authority: Chapter 70.185 RCW. 03-19-054, § 246-562-110, filed 9/11/03, effective 10/12/03; 00-15-082, § 246-562-110, filed 7/19/00, effective 8/19/00; 98-20-067, § 246-562-110, filed 10/2/98, effective 11/2/98.]

WAC 246-562-120 Department review and action. (1) The department will review applications for completeness in date order received.

(2) Applications must be mailed, sent by commercial carrier, or delivered in person. Applications may not be sent by telefax, or electronically.

(3) The department may limit the time period during which applications may be submitted including cutting off applications after the state has sponsored all applications allowed in a given federal fiscal year.

(4) Should multiple primary care physician applications arrive at the department on the same day, the department will rank those applications according to the following criteria:

(a) Facilities located in federally designated shortage areas will rank ahead of those facilities located in nondesignated areas.

(b) Federally designated shortage facilities will rank first.

(c) Publicly funded employers, such as public hospital districts, community health centers, local, state, or federal governmental institutions or correctional facilities, who have an obligation to provide care to underserved populations, will rank second.

(d) Critical access hospitals and rural health clinics will rank third.

(e) All other private practice, for profit facilities will rank last.

(f) If multiple applications within a designated category arrive on the same day or if a ranked order cannot be determined by using the criteria in (a) through (f) of this subsection, then applications will be ranked by:

(i) Percentage of services provided to low-income, uninsured and sliding fee based patients;

(ii) Distance from applicant's practice location to nearest publicly funded provider;

(iii) Language skill of provider matching those significantly represented in the community;

(iv) Type of services provided, outpatient versus inpatient; and

(v) Facility location, rural versus urban based on RUCA codes to most current census data.

(5) Should multiple specialist applications arrive at the department on the same day, the department will rank these applications according to the following criteria:

(a) Facilities located in federally designated shortage areas will rank ahead of those facilities located in nondesignated areas.

(b) Hospitals or other health care facilities at risk of being out of state compliance standards will rank first. For example: The physician specialty is needed to maintain trauma designation or meet certificate of need requirements.

(c) Federally designated shortage facilities will rank second.

(d) Publicly funded employers, such as public hospital districts, community health centers, local, state, or federal governmental institutions or correctional facilities, who have an obligation to provide care to underserved populations will rank third.

(e) All other private practice, for profit facilities will rank last.

(f) If multiple applications within a designated category arrive on the same day, or if a ranked order cannot be determined by using the criteria in (a) through (e) of this subsection, then applications will be ranked by:

(i) Percentage of services provided to low-income, uninsured and sliding fee based patients;

(ii) Distance from applicant's practice location to nearest publicly funded provider;

(iii) Language skill of provider matching those significantly represented in the community;

(iv) Type of services provided, outpatient versus inpatient; and

(v) Facility location, rural versus urban based on RUCA codes to most current census data.

(6) The department will review applications within ten working days of receipt of the application to determine if the application is complete.

(7) The department will return incomplete applications to the applicant, and provide a written explanation of missing items.

(8) Incomplete applications may be resubmitted with additional required information. Resubmitted applications will be considered new applications and will be reviewed in date order received on resubmission.

(9) The department will return applications that are received after the maximum number of sponsorships have been approved. This does not apply to copies of other federal J-1 applications.

(10) The department will return sponsorship applications to applicants who have had two approved sponsorships in the current year for the shortage area.

(11) If the Washington state medical license is pending at the time the application is submitted to the department, the department may:

(a) Sponsor or concur;

(b) Hold the application in order received; or

(c) Return the application as incomplete.

(12) The department will review complete applications against the criteria specified in this chapter.

(13) The department may:

(a) Request additional clarifying information;

(b) Verify information presented;

(c) Investigate financial status of the applicant;

(d) Further investigate any comments generated by publicly funded provider notification of application for waiver;

(e) Return the application as incomplete if the applicant does not supply requested clarifying information within thirty days of request. Incomplete applications must be resubmitted. Resubmitted applications will be considered new applications and will be reviewed in date order received.

(14) The department will notify the applicant in writing of action taken. If the decision is to decline sponsorship, the department will provide an explanation of how the application failed to meet the stated criterion or criteria.

(15) The department may deny a visa waiver request or, prior to U.S. Department of State approval, may withdraw a visa waiver recommendation for cause, which shall include the following:

(a) The application is not consistent with state and/or federal criteria;

(b) Fraud;

(c) Misrepresentation;

(d) False statements;

(e) Misleading statements; or

(f) Evasion or suppression of material facts in the visa waiver application or in any of its required documentation and supporting materials.

(16) Applications denied may be resubmitted with concerns addressed. Resubmitted applications will be considered new applications and will be reviewed in date order received.

[Statutory Authority: Chapter 70.185 RCW and Public Law 108-441. 06-07-035, § 246-562-120, filed 3/8/06, effective 4/8/06. Statutory Authority: Chapter 70.185 RCW. 03-19-054, § 246-562-120, filed 9/11/03, effective 10/12/03; 00-15-082, § 246-562-120, filed 7/19/00, effective 8/19/00; 98-20-067, § 246-562-120, filed 10/2/98, effective 11/2/98.]

WAC 246-562-130 Eligibility for future participation in the visa waiver program. (1) Health care facilities may

be denied future participation in the state visa waiver program if:

(a) The required six-month reports are not submitted in a complete and timely manner.

(b) A sponsored physician does not serve the designated shortage area and/or shortage population for the full three years of employment for primary care physicians or the full five years of employment for specialists.

(c) A sponsored physician does not remain employed by the applicant for the full three years of employment for primary care physicians or the full five years of employment for specialists.

(d) The applicant has a history of noncompliance with any of the provisions of this chapter or federal labor law requirements.

(2) A health care facility may request a determination of eligibility prior to submitting an application. The department will review the situation upon receipt of a written request.

[Statutory Authority: Chapter 70.185 RCW and Public Law 108-441. 06-07-035, § 246-562-130, filed 3/8/06, effective 4/8/06. Statutory Authority: Chapter 70.185 RCW. 03-19-054, § 246-562-130, filed 9/11/03, effective 10/12/03; 98-20-067, § 246-562-130, filed 10/2/98, effective 11/2/98.]

WAC 246-562-140 Department's responsibility to report to the U.S. Department of State and the United States Bureau of Citizenship and Immigration Services. (1) The department may report to the U.S. Department of State and the United States Bureau of Citizenship and Immigration Services if the applicant or physician is determined to be out of compliance with any of the provisions of this chapter.

(2) The department may report to the U.S. Department of State and the United States Bureau of Citizenship and Immigration Services if the physician is determined to have left employment in the federally designated area.

[Statutory Authority: Chapter 70.185 RCW. 03-19-054, § 246-562-140, filed 9/11/03, effective 10/12/03; 00-15-082, § 246-562-140, filed 7/19/00, effective 8/19/00; 98-20-067, § 246-562-140, filed 10/2/98, effective 11/2/98.]

WAC 246-562-150 Appeal process. (1) The applicant or physician may appeal the following department decisions:

(a) To deny or withdraw a visa waiver sponsorship;

(b) To deny a request for approval of an employment contract amendment;

(c) Determination that the applicant or physician is out of compliance with this chapter; or

(d) Determination that the applicant is not eligible for future participation in the visa waiver program.

(2) The appeal process is governed by the Administrative Procedure Act (chapter 34.05 RCW), chapter 246-10 WAC, and this chapter.

(3) To initiate an appeal, the applicant must file a written request for an adjudicative proceeding within twenty-eight days of receipt of the department's decision.

(4) The request shall be mailed, by a method showing proof of receipt, to the Adjudicative Clerk Office, PO Box 47879, 2413 Pacific Avenue, Olympia, WA 98504-7879.

(5) The request must contain:

(a) A specific statement of the issue or issues and law involved;

(b) The grounds for contesting the department's decision; and

(c) A copy of the department's decision.

[Statutory Authority: Chapter 70.185 RCW. 00-15-082, § 246-562-150, filed 7/19/00, effective 8/19/00; 98-20-067, § 246-562-150, filed 10/2/98, effective 11/2/98.]

WAC 246-562-160 Implementation. Notwithstanding any other provision of this chapter, this rule governs the allocation of departmental J-1 visa waiver sponsorships of specialists and primary care physicians during the federal fiscal year which begins October 1 of each year.

[Statutory Authority: Chapter 70.185 RCW. 03-19-054, § 246-562-160, filed 9/11/03, effective 10/12/03; 02-19-084, § 246-562-160, filed 9/16/02, effective 10/17/02; 00-15-082, § 246-562-160, filed 7/19/00, effective 8/19/00.]

Chapter 246-564 WAC

VOLUNTEER RETIRED PROVIDER MALPRACTICE INSURANCE PROGRAM

WAC

246-564-001 Purpose.
246-564-010 Qualified practice settings defined.

WAC 246-564-001 Purpose. The volunteer retired provider malpractice insurance program (VRP) was established under RCW 43.70.460 and 43.70.470, and is administered by the department of health. The VRP program serves low-income patients by increasing access to health care services. The program pays the malpractice insurance for volunteer health care providers in qualified practice settings.

[Statutory Authority: 2004 c 184, RCW 43.70.470. 05-10-094, § 246-564-001, filed 5/4/05, effective 6/4/05.]

WAC 246-564-010 Qualified practice settings defined. Qualified practice settings include any of the following:

(1) Public or tax exempt corporations.

(2) For-profit practice settings that maintain and hold themselves out to the public as providing health care services to medicaid patients and post a sliding fee scale.

(3) For-profit practice settings that have established hours on a regular basis for providing free health care services.

(4) For-profit practice settings that participate, through a written agreement, in a community-based program to provide access to health care services for uninsured persons.

[Statutory Authority: 2004 c 184, RCW 43.70.470. 05-10-094, § 246-564-010, filed 5/4/05, effective 6/4/05.]

Chapter 246-650 WAC

NEWBORN SCREENING

WAC

246-650-001 Purpose.
246-650-010 Definitions.
246-650-020 Performance of screening tests.
246-650-030 Implementation of screening to detect amino acid disorders, fatty acid oxidation disorders and organic acid disorders.
246-650-040 Report to the board.
246-650-050 Privacy and security of screening specimen/information forms.

246-650-990 Screening charge.
246-650-991 Specialty clinic support fee.

WAC 246-650-001 Purpose. The purpose of this chapter is to establish board rules to detect, in newborns, congenital disorders leading to developmental impairment or physical disabilities as required by RCW 70.83.050 and to provide protections for the confidentiality of information and human biological specimens submitted pursuant to these requirements.

[Statutory Authority: Chapters 70.83, 43.20 RCW. 03-24-026, § 246-650-001, filed 11/24/03, effective 12/25/03. Statutory Authority: RCW 43.20.050. 91-02-051 (Order 124B), recodified as § 246-650-001, filed 12/27/90, effective 1/31/91. Statutory Authority: RCW 43.20.050 and 70.83.050. 87-11-040 (Order 303), § 248-103-001, filed 5/18/87.]

WAC 246-650-010 Definitions. For the purposes of this chapter:

(1) "Amino acid disorders" means disorders of metabolism characterized by the body's inability to correctly process amino acids or the inability to detoxify the ammonia released during the breakdown of amino acids. The accumulation of amino acids or their by-products may cause severe complications including mental retardation, coma, seizures, and possibly death. For the purpose of this chapter amino acid disorders include: Argininosuccinic acidemia (ASA), citrullinemia (CIT), homocystinuria (HCY), maple syrup urine disease (MSUD), phenylketonuria (PKU), and tyrosinemia type I (TYR I).

(2) "Board" means the Washington state board of health.

(3) "Biotinidase deficiency" means a deficiency of an enzyme (biotinidase) that facilitates the body's recycling of biotin. The result is biotin deficiency, which if undetected and untreated, may result in severe neurological damage or death.

(4) "Congenital adrenal hyperplasia" means a severe disorder of adrenal steroid metabolism which may result in death of an infant during the neonatal period if undetected and untreated.

(5) "Congenital hypothyroidism" means a disorder of thyroid function during the neonatal period causing impaired mental functioning if undetected and untreated.

(6) "Cystic fibrosis" means a life-shortening disease caused by mutations in the gene encoding the cystic fibrosis transmembrane conductance regulator (CFTR), a transmembrane protein involved in ion transport. Affected individuals suffer from chronic, progressive pulmonary disease and nutritional deficits. Early detection and enrollment in a comprehensive care system provides improved outcomes and avoids the significant nutritional and growth deficits that are evident when diagnosed later.

(7) "Department" means the Washington state department of health.

(8) "Fatty acid oxidation disorders" means disorders of metabolism characterized by the inability to efficiently use fat to make energy. When the body needs extra energy, such as during prolonged fasting or acute illness, these disorders can lead to hypoglycemia and metabolic crises resulting in serious damage affecting the brain, liver, heart, eyes, muscle, and possibly death. For the purpose of this chapter fatty acid oxidation disorders include: Carnitine uptake defect (CUD), long-chain L-3-OH acyl-CoA dehydrogenase deficiency (LCHADD), medium-chain acyl-CoA dehydrogenase deficiency (MCADD), trifunctional protein deficiency (TFP), and very long-chain acyl-CoA dehydrogenase deficiency (VLCADD).

(9) "Galactosemia" means a deficiency of enzymes that help the body convert the simple sugar galactose into glucose resulting in a buildup of galactose and galactose-1-PO_4 in the blood. If undetected and untreated, accumulated galactose-1-PO_4 may cause significant tissue and organ damage often leading to sepsis and death.

(10) "Hemoglobinopathy" means a hereditary blood disorder caused by genetic alteration of hemoglobin which results in characteristic clinical and laboratory abnormalities and which leads to developmental impairment or physical disabilities.

(11) "Organic acid disorders" means disorders of metabolism characterized by the accumulation of nonamino organic acids and toxic intermediates. This may lead to metabolic crisis with ketoacidosis, hyperammonemia and hypoglycemia resulting in severe neurological and physical damage and possibly death. For the purpose of this chapter organic acid disorders include: 3-OH 3-CH3 glutaric aciduria (HMG), beta-ketothiolase deficiency (BKT), glutaric acidemia type I (GA 1), isovaleric acidemia (IVA), methylmalonic acidemia (CblA,B), methylmalonic acidemia (*mutase deficiency*) (MUT), multiple carboxylase deficiency (MCD), and propionic acidemia (PROP).

(12) "Newborn" means an infant born in a hospital in the state of Washington prior to discharge from the hospital of birth or transfer.

(13) "Newborn screening specimen/information form" means the information form provided by the department including the filter paper portion and associated dried blood spots. A specimen/information form containing patient information is "Health care information" as defined by the Uniform Healthcare Information Act, RCW 70.02.010(6).

(14) "Significant screening test result" means a laboratory test result indicating a suspicion of abnormality and requiring further diagnostic evaluation of the involved infant for the specific disorder.

[Statutory Authority: Chapter 70.83 RCW. 08-13-073, § 246-650-010, filed 6/16/08, effective 7/17/08. Statutory Authority: Chapters 70.83, 43.20 RCW. 06-04-009, § 246-650-010, filed 1/20/06, effective 2/20/06; 03-24-026, § 246-650-010, filed 11/24/03, effective 12/25/03. Statutory Authority: RCW 43.20.050. 91-02-051 (Order 124B), recodified as § 246-650-010, filed 12/27/90, effective 1/31/91. Statutory Authority: Chapters 43.20 and 70.83 RCW. 91-01-032 (Order 114B), § 248-103-010, filed 12/11/90, effective 1/11/91. Statutory Authority: RCW 43.20.050 and 70.83.050. 87-11-040 (Order 303), § 248-103-010, filed 5/18/87.]

WAC 246-650-020 Performance of screening tests. (1) Hospitals providing birth and delivery services or neonatal care to infants shall:

(a) Inform parents or responsible parties, by providing a departmental information pamphlet or by other means, of:

(i) The purpose of screening newborns for congenital disorders,

(ii) Disorders of concern as listed in WAC 246-650-020(2),

(iii) The requirement for newborn screening, and

(iv) The legal right of parents or responsible parties to refuse testing because of religious tenets or practices as specified in RCW 70.83.020, and

(v) The specimen storage, retention and access requirements specified in WAC 246-650-050.

(b) Obtain a blood specimen for laboratory testing as specified by the department from each newborn prior to discharge from the hospital or, if not yet discharged, no later than five days of age.

(c) Use department-approved newborn screening specimen/information forms and directions for obtaining specimens.

(d) Enter all identifying and related information required on the specimen/information form following directions of the department.

(e) In the event a parent or responsible party refuses to allow newborn screening, obtain signatures from parents or responsible parties on the department specimen/information form.

(f) Forward the specimen/information form with dried blood spots or signed refusal to the Washington state public health laboratory no later than the day after collection or refusal signature.

(2) Upon receipt of specimens, the department shall:

(a) Perform appropriate screening tests for:

(i) Biotinidase deficiency;

(ii) Congenital hypothyroidism;

(iii) Congenital adrenal hyperplasia;

(iv) Galactosemia;

(v) Homocystinuria;

(vi) Hemoglobinopathies;

(vii) Maple syrup urine disease (MSDU);

(viii) Medium chain acyl-coA dehydrogenase deficiency (MCADD);

(ix) Phenylketonuria (PKU);

(x) Cystic fibrosis;

(xi) The amino acid disorders: Argininosuccinic acidemia (ASA), citrullinemia (CIT), and tyrosinemia type I (TYR 1) according to the schedule in WAC 246-650-030;

(xii) The fatty acid oxidation disorders: Carnitine uptake defect (CUD), long-chain L-3-OH acyl-CoA dehydrogenase deficiency (LCHADD), trifunctional protein deficiency (TFP), and very long-chain acyl-CoA dehydrogenase deficiency (VLCADD) according to the schedule in WAC 246-650-030;

(xiii) The organic acid disorders: 3-OH 3-CH3 glutaric aciduria (HMG), beta-ketothiolase deficiency (BKT), glutaric acidemia type I (GA 1), isovaleric acidemia (IVA), methylmalonic acidemia (CblA,B), methylmalonic acidemia (*mutase deficiency*) (MUT), multiple carboxylase deficiency (MCD), propionic acidemia (PROP) according to the schedule in WAC 246-650-030;

(b) Report significant screening test results to the infant's attending physician or family if an attending physician cannot be identified; and

(c) Offer diagnostic and treatment resources of the department to physicians attending infants with presumptive positive screening tests within limits determined by the department.

[Statutory Authority: Chapter 70.83 RCW. 08-13-073, § 246-650-020, filed 6/16/08, effective 7/17/08. Statutory Authority: Chapters 70.83, 43.20 RCW. 06-04-009, § 246-650-020, filed 1/20/06, effective 2/20/06; 03-24-026, § 246-650-020, filed 11/24/03, effective 12/25/03. Statutory Authority: RCW 43.20.050 and 70.83.050. 92-02-019 (Order 225B), § 246-650-020, filed 12/23/91, effective 1/23/92. Statutory Authority: RCW 43.20.050. 91-02-051 (Order 124B), recodified as § 246-650-020, filed 12/27/90, effective 1/31/91. Statutory Authority: Chapters 43.20 and 70.83 RCW. 91-01-032 (Order 114B), § 248-103-020, filed 12/11/90, effective 1/11/91. Statutory Authority: RCW 43.20.050 and 70.83.050. 87-11-040 (Order 303), § 248-103-020, filed 5/18/87.]

WAC 246-650-030 Implementation of screening to detect amino acid disorders, fatty acid oxidation disorders and organic acid disorders. The department shall implement screening to detect the amino acid disorders, fatty acid oxidation disorders, and organic acid disorders listed in WAC 246-650-020 (2)(a)(xi), (xii) and (xiii) as quickly as feasible and not later than September 2008.

[Statutory Authority: Chapter 70.83 RCW. 08-13-073, § 246-650-030, filed 6/16/08, effective 7/17/08. Statutory Authority: Chapters 70.83, 43.20 RCW. 06-04-009, § 246-650-030, filed 1/20/06, effective 2/20/06; 03-24-026, § 246-650-030, filed 11/24/03, effective 12/25/03. Statutory Authority: RCW 43.20.050. 91-02-051 (Order 124B), recodified as § 246-650-030, filed 12/27/90, effective 1/31/91. Statutory Authority: Chapters 43.20 and 70.83 RCW. 91-01-032 (Order 114B), § 248-103-040, filed 12/11/90, effective 1/11/91.]

WAC 246-650-040 Report to the board. The department shall report to the board annually the following information concerning tests conducted pursuant to this section:

(1) The costs of tests as charged by the department;

(2) The results of each category of tests, by county of birth and ethnic group, as reported on the newborn screening form and, if available, birth certificates; and

(3) Follow-up procedures and the results of such follow-up procedures.

[Statutory Authority: Chapters 70.83, 43.20 RCW. 03-24-026, § 246-650-040, filed 11/24/03, effective 12/25/03.]

WAC 246-650-050 Privacy and security of screening specimen/information forms. The specimen/information form submitted to the department pursuant to WAC 246-650-020 becomes the property of the state of Washington upon receipt by the Washington state public health laboratory. The department shall protect the privacy of newborns and their families and assure that all specimen/information forms submitted for screening are protected from inappropriate use or access.

(1) Storage: The specimen/information forms shall be kept at ambient temperature in secured storage to preserve their confidentiality and prevent access by unauthorized persons.

(2) Retention/destruction: The specimen/information form shall be retained until the child is twenty-one years old in accordance with the requirements for hospitals specified in RCW 70.41.190. After this time the form will be destroyed.

EXCEPTION FOR PARENTAL REQUEST: Upon request of a parent or guardian (or a patient who is over the age of eighteen years), the department will destroy the specimen/information form only after all required screening tests have been performed and if the patient's screening/clinical status related to these tests is not in question.

(3) Access: Access to stored specimen/information forms shall be restricted to department employees and those

contractors or others approved by the department as necessary to meet specific program needs. Access is contingent upon compliance with all applicable federal and state laws, regulations, and policies safeguarding the privacy and confidentiality of medical information. The department shall assure that those granted access understand the confidentiality requirements and have a signed confidentiality agreement on file.

(4) Release: Dried blood spot samples and specimen information may only be released when required by state or federal law or under the following conditions:

(a) A sample from a specimen and copies of associated information (patient information and testing results, if requested) may be released to:

(i) A health care provider at the request of the patient or their legal representative after completing and signing a written request form approved by the department. The release form must be provided to the director of newborn screening before the request will be fulfilled.

(ii) A researcher with the written, informed consent of the patient or their patient's legal representative as part of a research project that has been reviewed and approved by the DOH/DSHS human subjects research review board and the secretary or designee of the department of health.

(iii) A named person in a legally executed subpoena following review and approval of the state attorney general.

(iv) A person to whom release is mandated by order of a court of competent jurisdiction.

(b) Anonymous samples may be released if the department determines that the intended use has significant potential health benefit and that each of the following criteria have been met:

(i) The investigation design is adequate to assure anonymity will be preserved.

(ii) All newborn screening tests have been completed and the status of the infant is resolved.

(iii) At least one fully adequate spot will remain after the anonymous sample has been taken.

(iv) Sufficient resources (personnel) are available for extracting the samples.

(v) The DOH/DSHS human subjects research review board has reviewed and approved the investigation. This requirement may be waived by the department for a very small (i.e., less than 100 sample) pilot study where the intent is to evaluate a testing tool, as opposed to an evaluation where the intent is to measure some characteristic of a population.

(5) Notification: The department shall notify parents of the specimen storage, retention/destruction and access requirements through the department's newborn screening informational pamphlet.

[Statutory Authority: Chapters 70.83, 43.20 RCW. 03-24-026, § 246-650-050, filed 11/24/03, effective 12/25/03.]

WAC 246-650-990 Screening charge. The department has authority under RCW 43.20B.020 to require a reasonable charge from parents or responsible parties for the costs of newborn screening. The charge is to be collected through the facility where the specimen was obtained.

[Statutory Authority: RCW 70.83.040. 99-20-036, § 246-650-990, filed 9/29/99, effective 10/30/99. Statutory Authority: RCW 43.20B.020. 92-02-018 (Order 224), § 246-650-990, filed 12/23/91, effective 1/23/92. Statutory Authority: RCW 43.20.050. 91-02-051 (Order 124B), recodified as § 246-650-990, filed 12/27/90, effective 1/31/91. Statutory Authority: RCW 43.20.050 and 70.83.050. 87-11-040 (Order 303), § 248-103-030, filed 5/18/87.]

WAC 246-650-991 Specialty clinic support fee. (1) The department has the authority under RCW 70.83.040 to collect a fee for each infant screened to fund specialty clinics that provide treatment services for hemoglobin diseases, phenylketonuria, congenital adrenal hyperplasia, congenital hypothyroidism and other disorders defined by the state board of health under RCW 70.83.020.

(2) The specialty clinic support fee is $3.50. It is to be collected in conjunction with the screening charge from the parents or other responsible party through the facility where the screening specimen is obtained.

(3) However, effective through June 30, 2007, the department will collect an additional $3.10 to fund specialty clinics that provide treatment services for other disorders defined by the board under RCW 70.83.020.

[Statutory Authority: RCW 70.83.040. 05-20-108, § 246-650-991, filed 10/5/05, effective 11/5/05; 99-20-036, § 246-650-991, filed 9/29/99, effective 10/30/99.]

Chapter 246-680 WAC

PRENATAL TESTS—CONGENITAL AND HERITABLE DISORDERS

WAC

246-680-001 Purpose.
246-680-010 Definitions.
246-680-020 Board of health standards for screening and diagnostic tests during pregnancy.

WAC 246-680-001 Purpose. The purpose of this chapter is to establish standards for screening and diagnostic procedures for prenatal diagnosis of congenital disorders of the fetus under RCW 48.21.244, 48.44.344, and 48.46.375; and to establish criteria and timelines regarding the availability and use of prenatal tests for health care providers to share with pregnant women and couples as required under RCW 70.54.220.

[Statutory Authority: RCW 43.20.050, 70.54.220. 03-11-031, § 246-680-001, filed 5/15/03, effective 6/15/03. Statutory Authority: RCW 43.20.050. 91-02-051 (Order 124B), recodified as § 246-680-001, filed 12/27/90, effective 1/31/91. Statutory Authority: RCW 48.21.244, 48.44.344 and 48.46.375. 90-02-094 (Order 024), § 248-106-001, filed 1/3/90, effective 2/3/90.]

WAC 246-680-010 Definitions. For the purpose of this chapter, the following definitions apply:

(1) "Department" means the Washington state department of health.

(2) "Health care providers" means persons licensed or certified by the state of Washington under Title 18 RCW to provide prenatal care or to practice medicine and qualified genetic counselors.

(3) "Prenatal carrier testing" means a procedure to remove blood or other tissue from one or both parents in order to perform laboratory analysis to establish chromosome constitution or genetic carrier status of the parents.

(4) "Prenatal test" means any test to predict congenital or heritable disorders that may harm or endanger the health, safety, or welfare of members of the public if improperly utilized and includes preprocedure and postprocedure genetic counseling, laboratory tests, and procedures as follows:

(a) Maternal serum marker screening is a procedure involving obtaining blood from a pregnant woman during the fifteenth to twenty-second week of gestation, in order to measure through laboratory tests the level of certain analytes that are associated with increased risks to the fetus or pregnancy such as alpha-fetoprotein, unconjugated estriol, human gonadotropin, inhibin, and/or PAPP-A.

(b) Maternal hepatitis B surface antigen (HBsAg) screening is a procedure involving obtaining blood from a pregnant woman during the first trimester of pregnancy to test for maternal hepatitis B infection. HBsAg screening should be repeated during the last trimester of pregnancy if a woman is at high risk for hepatitis B infection.

(c) Group B strep screening per vaginorectal culture at 35-37 weeks gestation is used to screen pregnant women for Group B strep colonization. The swab culture specimen must be grown in selective broth media.

(d) Amniocentesis is a procedure performed after fourteen weeks of gestation to remove a small amount of amniotic fluid from the uterus of a pregnant woman, in order to perform one or more of the following laboratory tests:

(i) Measure the level of alpha-fetoprotein;

(ii) Measure the level of acetylcholinesterase;

(iii) Cytogenetic studies on fetal cells including fluorescent in-situ hybridization (FISH) if indicated;

(iv) Biochemical studies on fetal cells or amniotic fluid;

(v) Deoxyribonucleic Acid (DNA) studies on fetal cells including fetal genotyping for isoimmunization studies; and

(vi) Infectious disease studies.

(e) Chorionic villus sampling is a procedure performed from ten to twelve weeks of gestation to remove a small amount of cells from the developing placenta, in order to perform one or more of the following laboratory tests:

(i) Cytogenetic studies on fetal cells including fluorescent in-situ hybridization (FISH) if indicated;

(ii) Biochemical studies on fetal cells; and

(iii) DNA studies on fetal cells.

(f) Percutaneous umbilical cord blood sampling is a procedure performed typically after fifteen weeks of gestation to obtain blood from the fetus, in order to perform one or more of the following laboratory tests:

(i) Cytogenetic studies including fluorescent in-situ hybridization (FISH) if indicated;

(ii) Viral titer studies;

(iii) Fetal blood typing for isoimmunization studies;

(iv) Prenatal diagnostic tests for hematological disorders;

(v) DNA studies on fetal cells;

(vi) Biochemical studies on fetal blood.

(g) Prenatal ultrasonography is a procedure performed at any time during pregnancy resulting in visualization of the uterus, the placenta, the fetus, and internal structures through use of sound waves.

(h) "Preprocedure genetic counseling" means individual counseling, which may be part of another procedure or service, involving a health care provider or a qualified genetic counselor under the direction of a physician, and a pregnant woman with or without other family members, to assess and identify increased risks for congenital abnormalities or pregnancy complications, offer specific carrier or diagnostic tests, discuss the purposes, risks, accuracy, and limitations of a prenatal testing procedure, aid in decision making and to assist in obtaining the desired testing or procedure.

(i) "Postprocedure genetic counseling" means, when test results are available, individual counseling, which may be part of another procedure or service, involving a health care provider or a qualified genetic counselor under the direction of a physician and a pregnant woman with or without other family members, to discuss the results of the prenatal tests done, any further testing or procedures available and/or referrals for further consultation or counseling.

(j) "Qualified genetic counselor" means an individual eligible for certification or certified as defined by the American Board of Medical Genetics, Inc., or the American Board of Genetic Counseling.

[Statutory Authority: RCW 48.21.244, 48.44.344, 48.46.375, 70.54.220. 03-11-031, § 246-680-010, filed 5/15/03, effective 6/15/03. Statutory Authority: RCW 43.20.050. 91-02-051 (Order 124B), recodified as § 246-680-010, filed 12/27/90, effective 1/31/91. Statutory Authority: RCW 48.21.244, 48.44.344 and 48.46.375. 90-02-094 (Order 024), § 248-106-010, filed 1/3/90, effective 2/3/90.]

WAC 246-680-020 Board of health standards for screening and diagnostic tests during pregnancy. (1) For the purpose of RCW 48.21.244, 48.44.344, and 48.46.375, the following are standards of medical necessity for insurers, health care service contractors, and health maintenance organizations to use when authorizing requests or claims for prenatal screening and/or diagnosis without the requirement of a case-by-case determination and including preprocedure and postprocedure genetic counseling:

(a) Maternal serum marker screening for all pregnant women beginning prenatal care before the twentieth completed week of gestation.

(b) Maternal hepatitis B surface antigen (HBsAg) screening for all pregnant women during the first trimester of pregnancy and the last trimester of pregnancy if the woman is at high risk for hepatitis B infection.

(c) Information about Group B strep should be provided to all pregnant women, including the risk to the newborn, if the woman is identified through screening as potentially colonized with Group B strep. Screening is done through prenatal vaginorectal cultures, although specific clinical indicators may preclude screening. Pregnant women who are currently colonized with Group B strep, or who have unknown Group B strep status should receive intrapartum treatment in accordance with the current standard of practice in order to reduce risk to the newborn.

(d) Prenatal ultrasonography if one or more of the following criteria are met:

(i) A woman undergoing amniocentesis, chorionic villus sampling, or percutaneous umbilical cord blood sampling or fetal tissue biopsy;

(ii) The results of a maternal serum marker screening test indicate an increased risk to the fetus or pregnancy;

(iii) A woman or the biological father of the fetus has a personal or family history of a congenital abnormality detectable by prenatal ultrasound;

(iv) An increased risk of a congenital abnormality is present due to an environmental exposure including maternal exposure to alcohol; or

(v) A medical evaluation indicates the possibility of polyhydramnios or oligohydramnios.

(e) Amniocentesis if one or more of the following criteria are met:

(i) A woman is thirty-five years of age or older at the time of delivery;

(ii) A woman or the biologic father of the fetus has a previous child or fetus with a chromosomal abnormality or other prenatally diagnosable disorder;

(iii) A woman or the biologic father of the fetus has a family history that includes birth defects or developmental delays;

(iv) A woman or the biologic father of the fetus is a carrier of a chromosomal rearrangement;

(v) A woman and/or the biologic father of the fetus are carriers of, or affected with, a prenatally diagnosable inherited disorder;

(vi) The results of a maternal serum marker screening test indicate an increased risk to the pregnancy or fetus;

(vii) A woman has a documented history of three or more miscarriages of unknown cause when circumstances prevent parental chromosomal testing;

(viii) There is an ultrasound diagnosis of fetal anomaly;

(ix) A medical evaluation indicates an increased risk of fetal infection;

(x) Fetal blood studies are indicated for isoimmunization studies or therapy.

(f) Chorionic villus sampling with preprocedure and postprocedure genetic counseling if one or more of the following criteria are met:

(i) A woman is thirty-five years of age or older at the time of delivery;

(ii) A woman or the biologic father of the fetus has a previous child or fetus with a chromosomal abnormality or other prenatally diagnosable inherited disorder;

(iii) A woman or the biologic father of the fetus is a carrier of a chromosomal rearrangement;

(iv) A woman or the biologic father of the fetus is a carrier of, or affected with, a prenatally diagnosable inherited disorder;

(v) A woman has a documented history of three or more miscarriages of unknown cause when circumstances prevent parental chromosomal testing; or

(vi) Fetal genotyping is indicated to determine risks for isoimmunization.

(g) Fluorescent in-situ hybridization (FISH) if a medical evaluation indicates a rapid or specific submicroscopic chromosomal diagnosis is required to predict the prognosis for the fetus.

(2) The board recommends the following additional procedures for use by insurers, health service contractors, and health maintenance organizations in determining medical necessity on a case-by-case basis:

(a) Percutaneous umbilical cord blood sampling with preprocedure and postprocedure genetic counseling if one or more of the following criteria are met:

(i) A medical evaluation indicates rapid or specific submicroscopic chromosomal diagnosis or DNA diagnosis is required to predict prognosis for the fetus;

(ii) A medical evaluation indicates the possibility of a prenatally diagnosable fetal infection;

(iii) Fetal blood studies are medically indicated for isoimmunization studies or therapy;

(iv) Fetal blood is the only means to provide biochemical genetic diagnosis;

(v) Prenatal diagnosis of a hematological disorder is medically indicated.

(b) Prenatal tissue biopsy if the nature of the disorder in question indicates that fetal liver, skin, or other tissue biopsy is the only means to provide biochemical genetic diagnosis to protect the health of the mother or predict the prognosis of the fetus.

[Statutory Authority: RCW 48.21.244, 48.44.344, 48.46.375. 03-11-031, § 246-680-020, filed 5/15/03, effective 6/15/03. Statutory Authority: RCW 43.20.050. 91-02-051 (Order 124B), recodified as § 246-680-020, filed 12/27/90, effective 1/31/91. Statutory Authority: RCW 48.21.244, 48.44.-344 and 48.46.375. 90-02-094 (Order 024), § 248-106-020, filed 1/3/90, effective 2/3/90.]

Chapter 246-710 WAC
COORDINATED CHILDREN'S SERVICES

WAC

246-710-001	Declaration of purpose.
246-710-010	Definitions.
246-710-030	Program limitations.
246-710-050	Authorization of services.
246-710-060	Qualifications of hospitals and providers.
246-710-070	Fees and payments.
246-710-080	Third-party resources.
246-710-090	Repayment.

DISPOSITION OF SECTIONS FORMERLY CODIFIED IN THIS CHAPTER

246-710-020	Program eligibility. [Statutory Authority: RCW 43.20.050. 91-02-051 (Order 124B), recodified as § 246-710-020, filed 12/27/90, effective 1/31/91. Statutory Authority: RCW 43.20.140 and 43.20.050. 83-01-002 (Order 247), § 248-105-030, filed 12/2/82.] Repealed by 99-01-100, filed 12/17/98, effective 1/17/99. Statutory Authority: RCW 43.20.140.
246-710-040	Funding ceilings on neuromuscular program and individual neuromuscular centers. [Statutory Authority: RCW 43.20.050. 91-02-051 (Order 124B), recodified as § 246-710-040, filed 12/27/90, effective 1/31/91. Statutory Authority: RCW 43.20.140 and 43.20.050. 83-01-002 (Order 247), § 248-105-050, filed 12/2/82.] Repealed by 97-20-100, filed 9/29/97, effective 10/30/97. Statutory Authority: RCW 43.20.050.

WAC 246-710-001 Declaration of purpose. The following rules implement RCW 43.20.140 and chapter 43.70 RCW. The state board of health may develop rules that are necessary to implement RCW 43.20A.635 authorizing the secretary of the department of health to administer a program of services for children with special health care needs. The purpose of the CSHCN program is to develop, extend, and improve services and service systems for locating, diagnosing, and treating children with special health care needs within available resources.

[Statutory Authority: RCW 43.20.140. 99-01-100, § 246-710-001, filed 12/17/98, effective 1/17/99. Statutory Authority: RCW 43.20.050. 91-02-051 (Order 124B), recodified as § 246-710-001, filed 12/27/90, effective 1/31/91. Statutory Authority: RCW 43.20.140 and 43.20.050. 83-01-002 (Order 247), § 248-105-010, filed 12/2/82.]

WAC 246-710-010 Definitions. (1) "Client" means an individual with special health care needs, seventeen years of age or younger, who is being served by a local CSHCN agency.

(2) "Children with special health care needs" means children with disabilities or handicapping conditions; chronic illnesses or conditions; health related educational or behavioral problems; or children at risk of developing such disabilities, conditions, illnesses or problems.

(3) "CSHCN" means the children with special health care needs program.

(4) "Department" means department of health.

(5) "Local CSHCN agency" means the local health jurisdiction or other agency locally administering the CSHCN program for the county where the client resides in the state of Washington.

(6) "Service systems" means community-based systems of services such as primary and specialty medical services, early intervention, special education, and social and family support services for children with special health care needs and their families.

(7) "Services" means health-related interventions, including early identification, care coordination, medical, surgical and rehabilitation care, and equipment provided in hospitals, clinics, offices, and homes by local CSHCN agencies, physicians and other health care providers.

[Statutory Authority: RCW 43.20.140. 99-01-100, § 246-710-010, filed 12/17/98, effective 1/17/99. Statutory Authority: RCW 43.20.050. 91-02-051 (Order 124B), recodified as § 246-710-010, filed 12/27/90, effective 1/31/91. Statutory Authority: RCW 43.20.140 and 43.20.050. 83-01-002 (Order 247), § 248-105-020, filed 12/2/82.]

WAC 246-710-030 Program limitations. (1) The department may reduce the scope of CSHCN services and impose or revise funding limitations on certain services when required for budgetary reasons to accommodate available funding.

(2) Financial eligibility for a client must be determined annually when health-related services and equipment are paid for with CSHCN funds. Financial eligibility will be determined according to national standards of living for low-income families such as federal poverty levels or state median income adjusted for family size. Financial eligibility is not entitlement to CSHCN services.

[Statutory Authority: RCW 43.20.140. 99-01-100, § 246-710-030, filed 12/17/98, effective 1/17/99. Statutory Authority: RCW 43.20.050. 91-02-051 (Order 124B), recodified as § 246-710-030, filed 12/27/90, effective 1/31/91. Statutory Authority: RCW 43.20.140 and 43.20.050. 83-01-002 (Order 247), § 248-105-040, filed 12/2/82.]

WAC 246-710-050 Authorization of services. Authorization for services paid for with CSHCN funds will be accomplished in accordance with the following:

(1) Financial eligibility for a client has been determined.

(2) A request for services to be paid for with CSHCN funds has been reviewed for consistency with program directions. Services must be recognized as an acceptable form of treatment by a significant portion of the professional community.

(3) No services will be authorized for out-of-state providers if an equivalent service is available within the state of Washington. However, use of resources in bordering states will be authorized when appropriate.

[Statutory Authority: RCW 43.20.140. 99-01-100, § 246-710-050, filed 12/17/98, effective 1/17/99. Statutory Authority: RCW 43.20.050. 91-02-051 (Order 124B), recodified as § 246-710-050, filed 12/27/90, effective 1/31/91. Statutory Authority: RCW 43.20.140 and 43.20.050. 83-01-002 (Order 247), § 248-105-060, filed 12/2/82.]

WAC 246-710-060 Qualifications of hospitals and providers. Providers of services paid for with CSHCN funds must meet the following minimum qualifications.

(1) Hospitals will be:

(a) Accredited by the joint commission on the accreditation of health care organizations; and

(b) Licensed in the state where the hospital is located.

(2) Physicians will be:

(a) Licensed to practice medicine in Washington, or other state where they practice; and

(b) Board-certified or board-eligible by the appropriate specialty board.

(3) Providers other than physicians will be:

(a) Licensed or certified in Washington or in the state where they practice; or

(b) Accredited by the appropriate national professional organization when there is no state licensure or certification process.

[Statutory Authority: RCW 43.20.140. 99-01-100, § 246-710-060, filed 12/17/98, effective 1/17/99. Statutory Authority: RCW 43.20.050. 91-02-051 (Order 124B), recodified as § 246-710-060, filed 12/27/90, effective 1/31/91. Statutory Authority: RCW 43.20.140 and 43.20.050. 83-01-002 (Order 247), § 248-105-070, filed 12/2/82.]

WAC 246-710-070 Fees and payments. (1) Payments to providers of services using CSHCN funds will be made using the current CSHCN standards and payment schedules, including the Washington state department of social and health services medical assistance administration fee schedule and the CSHCN supplemental fee schedule.

(2) A provider will accept the fees paid under this section as full payment for services rendered.

[Statutory Authority: RCW 43.20.140. 99-01-100, § 246-710-070, filed 12/17/98, effective 1/17/99. Statutory Authority: RCW 43.20.050. 91-02-051 (Order 124B), recodified as § 246-710-070, filed 12/27/90, effective 1/31/91. Statutory Authority: RCW 43.20.140 and 43.20.050. 83-01-002 (Order 247), § 248-105-080, filed 12/2/82.]

WAC 246-710-080 Third-party resources. CSHCN is a secondary payer to all private and other public funded health programs. The department may pay for services with CSHCN funds only after payment by all entitlement programs and by all other private and public funding resources, except where prohibited by federal law.

[Statutory Authority: RCW 43.20.140. 99-01-100, § 246-710-080, filed 12/17/98, effective 1/17/99. Statutory Authority: RCW 43.20.050. 91-02-051 (Order 124B), recodified as § 246-710-080, filed 12/27/90, effective 1/31/91. Statutory Authority: RCW 43.20.140 and 43.20.050. 83-01-002 (Order 247), § 248-105-090, filed 12/2/82.]

WAC 246-710-090 Repayment. Repayment to the department from the provider, family or other source is required should insurance benefits, trusts, court-awarded damages or like funds become available, and where payments have been made to the family or provider for services paid for by CSHCN.

[Statutory Authority: RCW 43.20.140. 99-01-100, § 246-710-090, filed 12/17/98, effective 1/17/99. Statutory Authority: RCW 43.20.050. 91-02-051 (Order 124B), recodified as § 246-710-090, filed 12/27/90, effective 1/31/91. Statutory Authority: RCW 43.20.140 and 43.20.050. 83-01-002 (Order 247), § 248-105-100, filed 12/2/82.]

Chapter 246-760 WAC

AUDITORY AND VISUAL STANDARDS—SCHOOL DISTRICTS

WAC

246-760-001 What is the purpose of these rules?

AUDITORY ACUITY STANDARDS

246-760-020 How frequently must schools screen children?
246-760-030 What are the auditory acuity screening standards for screening equipment and procedures?
246-760-040 What are the procedures for auditory acuity screening?
246-760-050 What are the auditory acuity screening referral procedures?
246-760-060 What are the auditory acuity screening qualifications for personnel?

VISUAL ACUITY STANDARDS

246-760-070 What visual acuity screening equipment must be used?
246-760-080 What are the visual acuity screening procedures?
246-760-090 What are the visual acuity screening referral procedures?
246-760-100 What are the qualifications for visual screening personnel?

WAC 246-760-001 What is the purpose of these rules? These rules implement chapter 32, Laws of 1971. Under this chapter, each board of school directors in the state shall provide for and require screening of the auditory and visual acuity of children attending schools in their districts to determine if any children have defects sufficient to retard them in their studies. Each board of school directors shall establish procedures to implement these rules.

[Statutory Authority: RCW 28A.210.200. 02-20-079, § 246-760-001, filed 9/30/02, effective 10/31/02. Statutory Authority: RCW 43.20.050 and 28A.210.020. 92-02-019 (Order 225B), § 246-760-001, filed 12/23/91, effective 1/23/92. Statutory Authority: RCW 43.20.050. 91-02-051 (Order 124B), recodified as § 246-760-001, filed 12/27/90, effective 1/31/91; Order 63, § 248-144-010 (codified as WAC 248-148-010), filed 11/1/71.]

AUDITORY ACUITY STANDARDS

WAC 246-760-020 How frequently must schools screen children? Schools shall conduct auditory and visual screening of children:

(1) In kindergarten and grades one, two, three, five, and seven; and

(2) For any child showing symptoms of possible loss in auditory or visual acuity referred to the district by parents, guardians, or school staff.

(3) If resources permit, schools shall annually screen children at other grade levels.

[Statutory Authority: RCW 28A.210.200. 02-20-079, § 246-760-020, filed 9/30/02, effective 10/31/02. Statutory Authority: RCW 43.20.050. 91-02-051 (Order 124B), recodified as § 246-760-020, filed 12/27/90, effective 1/31/91. Statutory Authority: RCW 28A.31.030. 87-22-010 (Order 306), § 248-148-021, filed 10/26/87.]

WAC 246-760-030 What are the auditory acuity screening standards for screening equipment and procedures? (1) Schools shall use auditory screening equipment providing tonal stimuli at frequencies at one thousand, two thousand, and four thousand herz (Hz) at hearing levels of twenty decibels (dB), as measured at the earphones, in reference to American National Standards Institute (ANSI) 1996 standards.

(2) Qualified persons will check the calibration of frequencies and intensity at least every twelve months, at the earphones, using equipment designed for audiometer calibration.

[Statutory Authority: RCW 28A.210.200. 02-20-079, § 246-760-030, filed 9/30/02, effective 10/31/02. Statutory Authority: RCW 43.20.050. 91-02-051 (Order 124B), recodified as § 246-760-030, filed 12/27/90, effective 1/31/91. Statutory Authority: RCW 28A.31.030. 87-22-010 (Order 306), § 248-148-031, filed 10/26/87.]

WAC 246-760-040 What are the procedures for auditory acuity screening? (1) Schools shall screen all children referenced in WAC 246-760-020 on an individual basis at one thousand, two thousand, and four thousand Hz.

(2) The screener shall:

(a) Present each of the tonal stimuli at a hearing level of twenty dB based on the ANSI 1996 standards;

(b) Conduct screenings in an environment free of extraneous noise;

(c) If at all possible, complete screening within the first semester of each school year;

(d) Place the results of screenings, any referrals, and referral results in each student's health and/or school record; and

(e) Forward the results to the student's new school if the student transfers.

[Statutory Authority: RCW 28A.210.200. 02-20-079, § 246-760-040, filed 9/30/02, effective 10/31/02. Statutory Authority: RCW 43.20.050 and 28A.210.020. 92-02-019 (Order 225B), § 246-760-040, filed 12/23/91, effective 1/23/92. Statutory Authority: RCW 43.20.050. 91-02-051 (Order 124B), recodified as § 246-760-040, filed 12/27/90, effective 1/31/91. Statutory Authority: RCW 28A.31.030. 87-22-010 (Order 306), § 248-148-035, filed 10/26/87.]

WAC 246-760-050 What are the auditory acuity screening referral procedures? (1) If a child does not respond to one or more frequencies in either ear:

(a) The school must rescreen the child within six weeks; and

(b) Notify their teachers of the need for preferential positioning in class because of the possibility of decreased hearing; and

(c) Notify the parents or legal guardian of the need for audiological evaluation if the student fails the second screening.

(2) Schools shall notify parents or legal guardian of the need for medical evaluation if:

(a) Indicated by audiological evaluation; or

(b) Audiological evaluation is not available.

[Statutory Authority: RCW 28A.210.200. 02-20-079, § 246-760-050, filed 9/30/02, effective 10/31/02. Statutory Authority: RCW 43.20.050. 91-02-051 (Order 124B), recodified as § 246-760-050, filed 12/27/90, effective

1/31/91. Statutory Authority: RCW 28A.31.030. 87-22-010 (Order 306), § 248-148-091, filed 10/26/87.]

WAC 246-760-060 What are the auditory acuity screening qualifications for personnel? Each school district shall designate a district audiologist or district staff member having:

(1) Responsibility for administering the auditory screening program; and

(2) Training and experience to:

(a) Develop an administrative plan for conducting auditory screening in cooperation with the appropriate school personnel to ensure the program is carried out efficiently and effectively;

(b) Obtain the necessary instrumentation for carrying out the screening program, and ensuring the equipment is in proper working order and calibration; and

(c) Secure appropriate personnel for carrying out the screening program, if assistance is necessary, and for assuring these personnel are sufficiently trained to:

(i) Understand the purposes and regulations involved in the auditory screening programs; and

(ii) Utilize the screening equipment to ensure maximum accuracy;

(d) Ensure records are made and distributed as appropriate; and

(e) Disseminate information to other school personnel familiarizing them with aspects of a child's behavior indicating the need for referral for auditory screening.

[Statutory Authority: RCW 28A.210.200. 02-20-079, § 246-760-060, filed 9/30/02, effective 10/31/02. Statutory Authority: RCW 43.20.050. 91-02-051 (Order 124B), recodified as § 246-760-060, filed 12/27/90, effective 1/31/91. Statutory Authority: RCW 28A.31.030. 87-22-010 (Order 306), § 248-148-101, filed 10/26/87.]

VISUAL ACUITY STANDARDS

WAC 246-760-070 What visual acuity screening equipment must be used? Personnel conducting the screening must use a Snellen test chart for screening for distance central vision acuity. Either the Snellen E chart or the standard Snellen distance acuity chart may be used as appropriate to the child's age and abilities. The test chart must be properly illuminated and glare free.

Other screening procedures equivalent to the Snellen test may be used only if approved by the state board of health.

[Statutory Authority: RCW 28A.210.200. 02-20-079, § 246-760-070, filed 9/30/02, effective 10/31/02. Statutory Authority: RCW 43.20.050. 91-02-051 (Order 124B), recodified as § 246-760-070, filed 12/27/90, effective 1/31/91. Statutory Authority: RCW 28A.31.030. 87-22-010 (Order 306), § 248-148-121, filed 10/26/87.]

WAC 246-760-080 What are the visual acuity screening procedures? (1) Schools shall:

(a) Screen children with corrective lenses for distance viewing with their corrective lenses on;

(b) Place the results of screening, any referrals, and referral results in each student's health and/or school record; and

(c) Forward the results to the student's new school if the student transfers.

(2) If school personnel observe a child with other signs or symptoms related to eye problems and if the signs or symptoms negatively influence the child in his or her studies, school personnel shall refer the child to the parents or guardians for professional care.

[Statutory Authority: RCW 28A.210.200. 02-20-079, § 246-760-080, filed 9/30/02, effective 10/31/02. Statutory Authority: RCW 43.20.050. 91-02-051 (Order 124B), recodified as § 246-760-080, filed 12/27/90, effective 1/31/91. Statutory Authority: RCW 28A.31.030. 87-22-010 (Order 306), § 248-148-123, filed 10/26/87.]

WAC 246-760-090 What are the visual acuity screening referral procedures? Schools shall rescreen students having a visual acuity of 20/40 or less in either eye as determined by the Snellen test or its approved equivalent within two weeks or as soon as possible after the original screening. Failure is indicated by the inability to identify the majority of letters or symbols on the thirty foot line of the test chart at a distance of twenty feet.

Schools shall inform parents or guardians of students failing the second screening, in writing, of the need and importance for the child to receive professional care.

[Statutory Authority: RCW 28A.210.200. 02-20-079, § 246-760-090, filed 9/30/02, effective 10/31/02. Statutory Authority: RCW 43.20.050. 91-02-051 (Order 124B), recodified as § 246-760-090, filed 12/27/90, effective 1/31/91. Statutory Authority: RCW 28A.31.030. 87-22-010 (Order 306), § 248-148-131, filed 10/26/87.]

WAC 246-760-100 What are the qualifications for visual screening personnel? (1) Screening must be performed by persons competent to administer screening procedures as a function of their professional training and background or special training and demonstrated competence under supervision.

(2) Technicians and nonprofessional volunteers must have adequate preparation and thorough understanding of the tests as demonstrated by their performance under supervision.

(3) Supervision, training, reporting and referral shall be the responsibility of a professional person specifically designated by the school administration. He or she may be a school nurse or public health nurse, a special educator, teacher or administrator who possesses basic knowledge of the objectives and methods of visual acuity screening, supervisory experience and ability, demonstrated ability to teach others and demonstrated capacity to work well with people.

(4) Screening may not be performed by ophthalmologists, optometrists, or opticians or any individuals who may have a conflict of interest.

[Statutory Authority: RCW 28A.210.200. 02-20-079, § 246-760-100, filed 9/30/02, effective 10/31/02. Statutory Authority: RCW 43.20.050. 91-02-051 (Order 124B), recodified as § 246-760-100, filed 12/27/90, effective 1/31/91; Order 63, § 248-144-150 (codified as WAC 248-148-150), filed 11/1/71.]

Chapter 246-762 WAC

SCOLIOSIS SCREENING—SCHOOL DISTRICTS

WAC

246-762-001 What is the purpose of scoliosis screening in public schools?
246-762-010 What words and terms are defined for this chapter?
246-762-020 When are students screened for scoliosis?

246-762-030 What are the qualifications for persons who do screening?
246-762-040 What are the medical standards for screening?
246-762-050 What happens to screening results?

DISPOSITION OF SECTIONS FORMERLY CODIFIED IN THIS CHAPTER

246-762-060 Distribution of rules and procedures. [Statutory Authority: RCW 43.20.050. 91-02-051 (Order 124B), recodified as § 246-762-060, filed 12/27/90, effective 1/31/91. Statutory Authority: RCW 28A.31.134 and 43.20.050. 85-23-029 (Order 294), § 248-150-070, filed 11/14/85. Statutory Authority: RCW 43.20.050. 79-11-103 (Order 189), § 248-150-070, filed 10/31/79.] Repealed by 97-20-100, filed 9/29/97, effective 10/30/97. Statutory Authority: RCW 43.20.050.

246-762-070 Exemptions from examinations—Screening waivers. [Statutory Authority: RCW 43.20.050. 91-02-051 (Order 124B), recodified as § 246-762-070, filed 12/27/90, effective 1/31/91. Statutory Authority: RCW 28A.31.134 and 43.20.050. 85-23-029 (Order 294), § 248-150-080, filed 11/14/85. Statutory Authority: RCW 43.20.050. 79-11-103 (Order 189), § 248-150-080, filed 10/31/79.] Repealed by 97-20-100, filed 9/29/97, effective 10/30/97. Statutory Authority: RCW 43.20.050.

WAC 246-762-001 What is the purpose of scoliosis screening in public schools? The purpose of scoliosis screening in public schools is early detection and notification of parents and guardians about the condition and the need for referral for early diagnosis and possible treatment.

[Statutory Authority: RCW 28A.210.200. 02-20-076, § 246-762-001, filed 9/30/02, effective 10/31/02. Statutory Authority: RCW 43.20.050. 91-02-051 (Order 124B), recodified as § 246-762-001, filed 12/27/90, effective 1/31/91. Statutory Authority: RCW 28A.31.134 and 43.20.050. 85-23-029 (Order 294), § 248-150-010, filed 11/14/85. Statutory Authority: RCW 43.20.050. 79-11-103 (Order 189), § 248-150-010, filed 10/31/79.]

WAC 246-762-010 What words and terms are defined for this chapter? (1) "Proper training" means instruction and training appropriate for persons who perform scoliosis screening procedures. Proper training is provided by, or under the supervision of, a physician licensed under chapters 18.57 or 18.71 RCW, or a registered nurse licensed under chapter 18.79 RCW who has had specialty training in scoliosis detection.

(2) "Public schools" means common schools referred to in Article IX of the state Constitution and those schools and institutions of learning having a curriculum below the college or university level established by law and maintained at public expense.

(3) "Qualified licensed health practitioners" means physicians licensed under chapters 18.57 and 18.71 RCW, registered nurses licensed under chapter 18.79 RCW, and physical therapists licensed under chapter 18.74 RCW, practicing within the scope of their field as defined by the appropriate regulatory authority.

(4) "Scoliosis" includes idiopathic scoliosis and kyphosis. "Idiopathic" means "of unknown origin." "Scoliosis" means "an appreciable lateral deviation in the normally straight vertical line of the spine as viewed from the back." "Kyphosis" means "an abnormally increased convexity in the curvature of the thoracic spine as viewed from the side."

(5) "Screening" means a procedure performed for the purpose of detecting the possible presence of scoliosis, except as provided for in WAC 246-762-070.

(6) "Superintendent" means the superintendent of public instruction under Article III of the state Constitution or his or her designee.

[Statutory Authority: RCW 28A.210.200. 02-20-076, § 246-762-010, filed 9/30/02, effective 10/31/02. Statutory Authority: RCW 28A.210.200 and [28A.210].220. 92-06-067 (Order 249B), § 246-762-010, filed 3/3/92, effective 4/3/92. Statutory Authority: RCW 43.20.050. 91-02-051 (Order 124B), recodified as § 246-762-010, filed 12/27/90, effective 1/31/91. Statutory Authority: RCW 28A.31.134 and 43.20.050. 85-23-029 (Order 294), § 248-150-020, filed 11/14/85. Statutory Authority: RCW 43.20.050. 79-11-103 (Order 189), § 248-150-020, filed 10/31/79.]

WAC 246-762-020 When are students screened for scoliosis? Each public school shall annually screen all students in grades five, seven, and nine except students with a valid written exemption request from a parent or guardian. Valid exemption requests must certify scoliosis screening conflicts with philosophical or religious beliefs or the student is under the care of a health care provider for spinal curvature or a related medical condition.

[Statutory Authority: RCW 28A.210.200. 02-20-076, § 246-762-020, filed 9/30/02, effective 10/31/02. Statutory Authority: RCW 28A.210.200 and [28A.210].220. 92-06-067 (Order 249B), § 246-762-020, filed 3/3/92, effective 4/3/92. Statutory Authority: RCW 43.20.050. 91-02-051 (Order 124B), recodified as § 246-762-020, filed 12/27/90, effective 1/31/91. Statutory Authority: RCW 28A.31.134 and 43.20.050. 85-23-029 (Order 294), § 248-150-030, filed 11/14/85. Statutory Authority: RCW 43.20.050. 79-11-103 (Order 189), § 248-150-030, filed 10/31/79.]

WAC 246-762-030 What are the qualifications for persons who do screening? (1) Persons who screen for scoliosis must be school physicians, school nurses, qualified licensed health practitioners, physical education instructors, other school personnel, or other persons designated by school authorities who have received proper training.

(2) Each school district shall designate one individual of the district's staff who is responsible for the administration of scoliosis screening. This individual's training and experience must be appropriate to perform the following tasks:

(a) Develop an administrative plan for conducting scoliosis screening in the district in cooperation with the appropriate school personnel. The plan must ensure the program can be carried out efficiently with minimum disruption, and include arrangement of appropriate scheduling for scoliosis screenings;

(b) Secure appropriate personnel with proper training to carry out the screening program;

(c) Ensure accurate and appropriate recordkeeping, make recommendations appropriate to the needs of each student whose screening test is indicative of possible scoliosis, and provide copies of these records to parents or legal guardians of each student; and

(d) Disseminate information to other school personnel to explain the purpose of the program, and to inform them of the criteria which might indicate the need for referral for scoliosis screening; and

(e) To institute a procedure to evaluate the effectiveness and accuracy of the screening program.

[Statutory Authority: RCW 28A.210.200. 02-20-076, § 246-762-030, filed 9/30/02, effective 10/31/02. Statutory Authority: RCW 43.20.050. 91-02-051 (Order 124B), recodified as § 246-762-030, filed 12/27/90, effective 1/31/91. Statutory Authority: RCW 28A.31.134 and 43.20.050. 85-23-029 (Order 294), § 248-150-040, filed 11/14/85. Statutory Authority: RCW 43.20.050. 79-11-103 (Order 189), § 248-150-040, filed 10/31/79.]

WAC 246-762-040 What are the medical standards for screening? The screening procedures must be consistent with nationally accepted standards for scoliosis screening and published by the American Academy of Orthopedic Surgeons as contained in *Screening Procedure Guidelines for Spinal Deformity*. These guidelines may be obtained from the Scoliosis Research Society.

[Statutory Authority: RCW 28A.210.200. 02-20-076, § 246-762-040, filed 9/30/02, effective 10/31/02. Statutory Authority: RCW 28A.210.200 and [28A.210].220. 92-06-067 (Order 249B), § 246-762-040, filed 3/3/92, effective 4/3/92. Statutory Authority: RCW 43.20.050. 91-02-051 (Order 124B), recodified as § 246-762-040, filed 12/27/90, effective 1/31/91. Statutory Authority: RCW 28A.31.134 and 43.20.050. 85-23-029 (Order 294), § 248-150-050, filed 11/14/85. Statutory Authority: RCW 43.20.050. 79-11-103 (Order 189), § 248-150-050, filed 10/31/79.]

WAC 246-762-050 What happens to screening results? The school shall create a record of screening results for each student suspected of having scoliosis, and shall notify the parent or legal guardian of the student. The notification must include an explanation of scoliosis, the significance of treating scoliosis at an early stage, the services generally available from a qualified licensed health practitioner for treatment after diagnosis, and a method for the school to receive follow-up information from health care providers.

[Statutory Authority: RCW 28A.210.200. 02-20-076, § 246-762-050, filed 9/30/02, effective 10/31/02. Statutory Authority: RCW 43.20.050. 91-02-051 (Order 124B), recodified as § 246-762-050, filed 12/27/90, effective 1/31/91. Statutory Authority: RCW 28A.31.134 and 43.20.050. 85-23-029 (Order 294), § 248-150-060, filed 11/14/85. Statutory Authority: RCW 43.20.050. 79-11-103 (Order 189), § 248-15-060 (codified as WAC 248-150-060), filed 10/31/79.]

Chapter 246-780 WAC
FARMERS' MARKET NUTRITION PROGRAM

WAC

246-780-001 What is the WIC farmers' market nutrition program?
246-780-010 Definitions.
246-780-020 How does a farmers' market become a contractor?
246-780-022 What is expected of a contractor?
246-780-025 How does an eligible grower become authorized by a farmers' market to accept WIC farmers' market checks?
246-780-028 What is expected of an authorized grower?
246-780-030 What kind of foods can clients buy with WIC farmers' market checks?
246-780-040 What happens if a farmers' market or a grower does not comply with WIC farmers' market nutrition program requirements?
246-780-060 How does a farmers' market or grower appeal a department decision?

DISPOSITION OF SECTIONS FORMERLY CODIFIED IN THIS CHAPTER

246-780-050 Notice of adverse action to a FMNP contractor and/or grower. [Statutory Authority: RCW 43.70.120. 96-01-085, § 246-780-050, filed 12/18/95, effective 1/18/96.] Repealed by 00-07-129, filed 3/22/00, effective 4/22/00. Statutory Authority: RCW 43.70.120 and 7 C.F.R. 248.

246-780-070 Contractor/grower-continued participation pending dispute resolution. [Statutory Authority: RCW 43.70.120. 96-01-085, § 246-780-070, filed 12/18/95, effective 1/18/96.] Repealed by 00-07-129, filed 3/22/00, effective 4/22/00. Statutory Authority: RCW 43.70.120 and 7 C.F.R. 248.

WAC 246-780-001 What is the WIC farmers' market nutrition program? (1) The purpose of the WIC farmers' market nutrition program is to:

(a) Provide locally grown, fresh, nutritious, unprepared fruits and vegetables to women, infants over five months of age, and children, who participate in the special supplemental nutrition program for women, infants, and children (WIC); and

(b) Expand the awareness and use of farmers' markets where consumers can buy directly from the grower.

(2) The WIC farmers' market nutrition program is administered by the Washington state departments of health and agriculture.

[Statutory Authority: RCW 43.70.120 and 7 C.F.R. 248. 00-07-129, § 246-780-001, filed 3/22/00, effective 4/22/00. Statutory Authority: RCW 43.70.120. 96-01-085, § 246-780-001, filed 12/18/95, effective 1/18/96.]

WAC 246-780-010 Definitions. (1) "Authorized" or "authorization" means an eligible grower and/or farmers' market has met the selection criteria and signed an agreement/contract with the department allowing participation in the WIC farmers' market nutrition program.

(2) "Broker" or "wholesale distributor" means an individual or business who exclusively sells produce grown by others. There is an exception for an individual employed by a grower who is qualified to participate in the WIC farmers' market nutrition program or is employed by a nonprofit organization to sell produce on behalf of qualified growers.

(3) "Contract" or "agreement" means a written legal document binding the contractor and the department to designated terms and conditions.

(4) "Contractor" means a farmers' market who has a signed contract with the department to participate in the WIC farmers' market nutrition program.

(5) "Cut herbs" means fresh herbs with no medicinal value that are not potted or bagged.

(6) "Department" means the Washington state departments of health and agriculture.

(7) "Disqualification" means the act of terminating the agreement and/or contract of an authorized grower and/or farmers' market from the WIC farmers' market nutrition program for noncompliance with program requirements.

(8) "Eligible foods" means locally grown, unprocessed (except for washing), fresh, nutritious fruits, vegetables, and cut herbs.

(9) "Eligible grower" means an individual or business who grows a portion of the produce that they sell at Washington state authorized farmers' markets.

(10) "Farmers' market" means a membership of five or more growers who assemble at a defined location for the purpose of selling their produce directly to consumers.

(11) "FMNP" or "program" means the WIC farmers' market nutrition program.

(12) "Locally grown" means Washington grown or grown in an adjacent county of Idaho or Oregon.

(13) "Local WIC agency" means the contracted agency or clinic where a client receives WIC services and WIC farmers' market checks.

(14) "Program coordinator" means an individual designated by the farmers' market manager (or market board members) responsible for overseeing the market's participation in the WIC farmers' market nutrition program.

(15) "Trafficking" means the buying or exchanging of WIC farmers' market checks for cash, drugs, or alcohol.

(16) "Validating" means stamping the WIC farmers' market check in the designated box with appropriate market and grower identification numbers using the stamper provided by the department.

(17) "WIC" or "WIC program" means the federally funded special supplemental nutrition program for women, infants, and children administered in Washington state by the department of health.

(18) "WIC client" or "client" means a pregnant, breast feeding, or postpartum woman, infant, or child receiving WIC benefits.

[Statutory Authority: RCW 43.70.120 and 7 C.F.R. 248. 00-07-129, § 246-780-010, filed 3/22/00, effective 4/22/00. Statutory Authority: RCW 43.70.120. 96-01-085, § 246-780-010, filed 12/18/95, effective 1/18/96.]

WAC 246-780-020 How does a farmers' market become a contractor? (1) A farmers' market wanting to participate in the WIC farmers' market nutrition program must apply for authorization, meet the selection criteria, and sign a contract with the department.

(2) Selection is based on the following:

(a) The local WIC agency in the farmers' market service area must participate in the WIC farmers' market nutrition program.

(b) The farmers' market must have a designated market manager on-site during operating hours.

(c) The farmers' market must have been in operation a minimum of one year. If there is a market currently participating in the program in an area where a new market has applied to participate, the one-year requirement may be waived.

(d) The farmers' market must keep a current list of eligible growers, including the farmer's name, business address, telephone number, and crops to be sold July through October. The farmers' market must agree to provide this list to the state WIC office on request.

(e) The farmers' market must be located within twenty miles of the local WIC agency.

(f) A minimum of five eligible growers must participate in the farmers' market each year.

(g) The farmers' market must agree to comply with training sessions and monitor visits.

(h) The farmers' market must agree to comply with all terms and conditions specified in the contract.

(3) The WIC farmers' market nutrition program is not required to authorize all applicants.

[Statutory Authority: RCW 43.70.120 and 7 C.F.R. 248. 00-07-129, § 246-780-020, filed 3/22/00, effective 4/22/00. Statutory Authority: RCW 43.70.-120. 96-01-085, § 246-780-020, filed 12/18/95, effective 1/18/96.]

WAC 246-780-022 What is expected of a contractor? (1) The contractor shall:

(a) Comply with the WIC farmers' market nutrition program requirements and the terms and conditions of the farmers' market contract;

(b) Accept training on WIC farmers' market nutrition program requirements from department staff;

(c) Provide training to market employees and eligible growers in person on WIC farmers' market nutrition program requirements;

(d) Be accountable for the actions of market employees involved in the WIC farmers' market nutrition program;

(e) Obtain signed grower agreements from eligible growers before they accept WIC farmers' market checks;

(f) Ensure that WIC farmers' market checks are redeemed only by eligible growers;

(g) Allow only growers selling locally grown produce to accept WIC farmers' market checks;

(h) Ensure that WIC farmers' market checks are redeemed only for eligible foods;

(i) Ensure eligible growers redeem WIC farmers' market checks within valid dates;

(j) Ensure eligible growers have and display the "WIC Farmers' Market Checks Welcome Here" sign each market day when at authorized markets;

(k) Refuse to validate any WIC farmers' market checks from ineligible growers;

(l) Agree to designate a program coordinator to validate WIC farmers' market checks with the appropriate market and grower identification numbers;

(m) Comply with federal and state nondiscrimination laws;

(n) Ensure that WIC farmers' market nutrition program clients receive the same courtesies as other customers;

(o) Agree to provide the department with any information it has available regarding its participation in the WIC farmers' market nutrition program;

(p) Agree to keep WIC farmers' market client information confidential;

(q) Agree to allow the department to monitor the farmers' market for compliance with program requirements;

(r) Notify the department immediately if and when market operations cease; and

(s) Report any suspected noncompliance with WIC farmers' market nutrition program requirements to the department.

(2) Neither the department nor the contractor have an obligation to renew a contract.

[Statutory Authority: RCW 43.70.120 and 7 C.F.R. 248. 00-07-129, § 246-780-022, filed 3/22/00, effective 4/22/00.]

WAC 246-780-025 How does an eligible grower become authorized by a farmers' market to accept WIC farmers' market checks? Eligible growers must:

(1) Grow a portion of the produce they have for sale. Any individual who purchases all the produce they plan to resell is considered a broker and is not allowed to participate in the program;

(2) Sell at an authorized farmers' market;

(3) Agree to follow the terms and conditions of the grower agreement; and

(4) Sign the grower agreement and return it to the department for signature and to be assigned a grower identification number.

[Statutory Authority: RCW 43.70.120 and 7 C.F.R. 248. 00-07-129, § 246-780-025, filed 3/22/00, effective 4/22/00.]

WAC 246-780-028 What is expected of an authorized grower? The authorized grower agrees to:

(1) Comply with the WIC farmers' market nutrition program requirements and the terms and conditions of the grower agreement;

(2) Accept training on WIC farmers' market nutrition program requirements and assure that all persons working in the authorized grower's stall are trained as well;

(3) Be held accountable for the actions of all persons working in the authorized grower's stall regarding WIC farmers' market nutrition program purchases;

(4) Accept WIC farmers' market checks only for eligible foods;

(5) Accept WIC farmers' market checks only at authorized farmers' markets;

(6) Accept WIC farmers' market checks within the valid dates of the program;

(7) Redeem WIC farmers' market checks by the date imprinted on the check;

(8) Display the "WIC Farmers' Market Checks Welcome Here" sign each market day when at authorized markets;

(9) Provide the WIC farmers' market nutrition program clients with the full amount of product for the value of each WIC farmers' market check;

(10) Charge WIC farmers' market nutrition program clients the same prices as other customers;

(11) Have the WIC farmers' market checks validated by the program coordinator at the farmers' market where the checks were accepted before cashing or depositing them;

(12) Make produce available that is the same quality as that offered to other customers;

(13) Comply with federal and state nondiscrimination laws;

(14) Treat WIC farmers' market customers as courteously as other customers;

(15) Cooperate with department staff in monitoring for compliance with program requirements and provide information on request;

(16) Reimburse the department for WIC farmers' market checks taken improperly;

(17) Not collect sales tax on WIC farmers' market check purchases;

(18) Not seek payment from WIC farmers' market nutrition program clients for checks not paid by the department;

(19) Not give cash back for purchases less than the value of the checks; and

(20) Not use WIC farmers' market checks to purchase foods from other growers or pay for market fees or other business costs.

[Statutory Authority: RCW 43.70.120 and 7 C.F.R. 248. 00-07-129, § 246-780-028, filed 3/22/00, effective 4/22/00.]

WAC 246-780-030 What kind of foods can clients buy with WIC farmers' market checks? (1) Locally grown, unprocessed (except for washing), fresh fruits, vegetables, and cut herbs can be purchased with WIC farmers' market checks.

(2) Ineligible items include, but are not limited to, baked goods, cheeses, cider, crafts, dairy products, dried fruits, dried herbs, dried vegetables, eggs, flowers, fruit juices, honey, jams, jellies, meats, nuts, potted herbs, seafood, seeds, and syrups.

[Statutory Authority: RCW 43.70.120 and 7 C.F.R. 248. 00-07-129, § 246-780-030, filed 3/22/00, effective 4/22/00. Statutory Authority: RCW 43.70.-120. 96-01-085, § 246-780-030, filed 12/18/95, effective 1/18/96.]

WAC 246-780-040 What happens if a farmers' market or a grower does not comply with WIC farmers' market nutrition program requirements? (1) Farmers' markets and growers who do not comply with WIC farmers' market nutrition program requirements are subject to sanctions, such as monetary penalties, in addition to, or in lieu of, disqualification. Prior to disqualifying a farmers' market or grower, the department shall consider whether the disqualification would create undue hardships for WIC farmers' market nutrition program clients.

(2) Noncompliance includes, but is not limited to:

(a) Failing to display the "WIC Farmers' Market Checks Welcome Here" sign each market day when at authorized markets;

(b) Providing unauthorized food, nonfood items, or other items to WIC farmers' market nutrition program clients in lieu of, or in addition to, eligible foods;

(c) Charging the program for foods not received by the client;

(d) Providing rain checks or credit to clients in a WIC farmers' market nutrition program transaction;

(e) Giving change to WIC farmers' market nutrition program clients if the purchase is less than the value of the WIC farmers' market check;

(f) Validating WIC farmers' market checks without having authorization from the department;

(g) Accepting WIC farmers' market checks without having a signed agreement with the department;

(h) Accepting WIC farmers' market checks at unauthorized farmers' markets;

(i) Failing to get the WIC farmers' market checks validated with the market and grower identification numbers by the farmers' market program coordinator where the checks were accepted;

(j) Collecting sales tax on WIC farmers' market purchases;

(k) Seeking restitution from program clients for checks not paid by the department;

(l) Accepting and/or validating checks outside of the program dates; and

(m) Violating the rules of this chapter or the provisions of the contract and/or agreement.

(3) Farmers' markets and growers found in noncompliance will be notified by the department and given the opportunity to correct the problem.

(4) If a farmers' market or grower is subsequently found in noncompliance for the same or a similar reason, the department may impose sanctions, such as monetary penalties or disqualification, without giving the opportunity to correct the problem.

(5) When the department notifies a farmers' market or grower of anything that affects their participation in the program, the department shall give written notice not less than fifteen days before the effective date of the action. The notice shall state what action is being taken, the effective date of the action, and the procedure for requesting an appeal hearing.

(6) The department may deny payment to a grower for mishandling WIC farmers' market checks.

(7) The department may seek reimbursement from a grower for payments made on improperly handled WIC farmers' market checks.

(8) Monetary penalties shall be paid to the department within the time period specified in the notice. The department shall refer farmers' markets and/or growers who fail to pay within the specified time period to a commercial collection agency. In addition, the department may disqualify a farmers' market or grower.

(9) A farmers' market or grower that has been disqualified from the WIC farmers' market nutrition program must reapply at the end of the disqualification period to be considered for authorization.

(10) Any trafficking in WIC farmers' market checks (exchanging checks for cash, drugs, or alcohol) in any amount shall result in disqualification.

(11) Farmers' markets and growers who commit fraud or other unlawful activities are liable for prosecution according to program regulations. (7 C.F.R. 248.10(k).)

[Statutory Authority: RCW 43.70.120 and 7 C.F.R. 248. 00-07-129, § 246-780-040, filed 3/22/00, effective 4/22/00. Statutory Authority: RCW 43.70.-120. 96-01-085, § 246-780-040, filed 12/18/95, effective 1/18/96.]

WAC 246-780-060 How does a farmers' market or grower appeal a department decision? (1) Farmers' markets and growers have a right to appeal denial of payment, denial of an application, monetary penalty or disqualification from the WIC farmers' market nutrition program. Expiration or nonrenewal of a contract or agreement is not subject to appeal.

(2) If the action being appealed is a disqualification of a farmers' market, the farmers' market shall cease validating WIC farmers' market checks for all growers participating in the market effective the date specified in the sanction notice.

(3) If the action being appealed is a disqualification of a grower, the grower shall cease accepting WIC farmers' market checks effective the date specified in the sanction notice. In addition, the farmers' market shall cease validating checks for the affected grower. Payments shall not be made for any WIC farmers' market checks submitted by a grower for payment during a period of disqualification.

(4) The department may, at its discretion, permit the farmers' market or grower to continue participating in the program pending the appeal hearing outcome.

(5) A request for an appeal hearing shall be in writing and shall:

(a) State the issue raised;

(b) Contain a summary of the farmers' market's or grower's position on the issue, indicating whether each charge is admitted, denied, or not contested;

(c) State the name and address of the farmers' market or grower requesting an appeal hearing;

(d) State the name and address of the attorney representing the farmers' market or grower, if any;

(e) State the farmers' market or grower's need for an interpreter or other special accommodations, if necessary; and

(f) Have a copy of the notice from the department attached.

(6) A request for an appeal shall be filed at the Department of Health, Adjudicative Clerk's Office, 1107 Eastside, P.O. Box 47879, Olympia, WA 98504-7879. The request shall be made within twenty-eight days of the date the farmers' market or grower received the department notice.

(7) The decision concerning the appeal shall be made within sixty days from the date the request for an appeal hearing was received by the adjudicative clerk's office. The time shall be extended by as many days as all parties agree to with good cause.

[Statutory Authority: RCW 43.70.120 and 7 C.F.R. 248. 00-07-129, § 246-780-060, filed 3/22/00, effective 4/22/00. Statutory Authority: RCW 43.70.-120. 96-01-085, § 246-780-060, filed 12/18/95, effective 1/18/96.]

Chapter 246-790 WAC

SPECIAL SUPPLEMENTAL NUTRITION PROGRAM FOR WOMEN, INFANTS, AND CHILDREN (WIC)

WAC

246-790-010	Definitions.
246-790-050	What is the WIC program?
246-790-060	What are WIC authorized foods?
246-790-065	What is the process for getting a food WIC authorized?
246-790-070	How do I become a WIC retailer?
246-790-080	What do I need to know about WIC retailer contracts?
246-790-085	What is expected of WIC retailers?
246-790-090	How are WIC retailer contracts monitored?
246-790-100	What happens if I don't comply with the WIC retailer contract or requirements?
246-790-120	How do I appeal a WIC decision I don't agree with?
246-790-130	How does the WIC program get input from the food industry?

DISPOSITION OF SECTIONS FORMERLY CODIFIED IN THIS CHAPTER

246-790-020	Rules—Applicability. [Statutory Authority: RCW 43.17.060, 43.21C.120 and 43.20A.550. 91-01-098 (Order 3118), § 246-790-020, filed 12/18/90, effective 1/18/91.] Repealed by 92-22-036 (Order 314), filed 10/27/92, effective 11/27/92. Statutory Authority: RCW 43.70.120.
246-790-110	Notice of adverse action to WIC food vendor—Denial of food vendor application, contract nonrenewal. [Statutory Authority: RCW 43.70.120. 92-22-036 (Order 314), § 246-790-110, filed 10/27/92, effective 11/27/92. Statutory Authority: RCW 43.20A.550. 91-01-097 (Order 3117), recodified as § 246-790-110, filed 12/18/90, effective 1/18/91; 88-14-037 (Order 2638), § 388-19-040, filed 6/30/88.] Repealed by 97-16-117, filed 8/6/97, effective 9/6/97. Statutory Authority: RCW 43.70.120.

WAC 246-790-010 Definitions. (1) "Alternate endorser" means a person authorized by the WIC client to pick up WIC checks at the local WIC agency and use the WIC checks at the retailer when the client is unable to do so.

(2) "Appeal hearing" means a formal proceeding to appeal certain program decisions. The appeal hearing process provides a contractor the opportunity to review the case record prior to the hearing, to present its case in an impartial setting, to confront and cross-examine witnesses, and to be represented by counsel.

(3) "Applicant retailer" means any retailer, or person representing a retailer, requesting authorization to participate in the WIC program who has submitted a completed request for authorization packet.

(4) "Authorized" or "authorization" means the retailer has met the selection criteria as required by the United States

Department of Agriculture (USDA), received training on WIC program requirements, and signed a contract with the WIC program.

(5) "CFR" means the Code of Federal Regulations.

(6) "Contract" or "retailer contract" means a written legal document which encompasses WIC program requirements that bind the contractor and the WIC program.

(7) "Contractor" means the owner, chief executive officer, controller, or other person legally authorized to represent their corporation, firm, or business and obligate a retailer to a contract.

(8) "Covertly" means in secret, undercover, or not openly announced.

(9) "Current shelf life" or "pull date" or "use by date" means a date and code printed on an item that indicates its best quality. This date shows when a product must be either sold or pulled from a shelf.

(10) "Department" means the Washington state department of health and any of the officers or other officials lawfully representing the department.

(11) "Disqualification" means the act of revoking the authorization and ending the contract of an authorized retailer permanently or for a specific period of time for noncompliance with WIC program requirements.

(12) "Effective policy and program to prevent trafficking" means a written document that states what can and cannot be done with WIC checks and the consequences for failing to follow program requirements. Effectiveness is determined by documentation that a retailer has provided this written policy to all employees, including employees' signatures verifying they have been advised of the policy and understand the consequences of noncompliance, both for the retailer and for the employee, prior to any noncompliance being detected.

(13) "Food company" means a manufacturer or broker of food items.

(14) "Food stamp EBT" means the electronic system that allows a recipient to authorize transfer of their government food benefits from a federal account to a retailer account to pay for products they buy.

(15) "Local WIC agency" means the contracted clinic or agency where a client receives WIC checks.

(16) "Maximum price" means the highest amount that can be charged for WIC approved foods as determined by the WIC program based on evaluation of current prices and market conditions.

(17) "Monetary penalty" means a sum of money imposed by the WIC program for noncompliance with program requirements.

(18) "Notice of correction" means a written document given to a retailer when the WIC program discovers noncompliance with program requirements. The notice of correction gives the retailer a reasonable period of time to correct the noncompliance without risk of receiving a sanction.

(19) "Pattern" means more than one documented incidence of noncompliance with WIC program requirements in a contract period.

(20) "Peer group" means a group of retailers who share similar characteristics. The WIC program considers factors such as location, either rural or urban, and the prices retailers charge when determining a retailer's placement in a peer group.

(21) "Providing credit" means the retailer takes a WIC check and deposits it for the full amount of the foods listed, even though the client does not receive all the foods at the time, and tells the client to come back later for the rest of the food.

(22) "Reauthorization" or "subsequent authorization" means the process when a retailer, who has a contract with the WIC program which is expiring, has reapplied, met the selection criteria, and signed another contract with the WIC program.

(23) "Redeeming WIC checks outside of authorized channels" means not following the requirements regarding who can accept WIC checks and how to redeem them. Examples include, but may not be limited to:

(a) A retailer accepting WIC checks without having a signed contract with the WIC program;

(b) A retailer using WIC checks to repay debt at a different authorized retailer; or

(c) A retailer who accepts and deposits WIC checks from an unauthorized source.

(24) "Rights and responsibilities" means the rights a client has within the WIC program and the rules clients and caregivers must follow to participate in the program. The rights and responsibilities are explained in a document the client, caregiver, or alternate endorser must sign.

(25) "Supplemental WIC foods" or "WIC approved foods" means those foods containing nutrients determined to be beneficial for pregnant, breastfeeding, and postpartum women, infants, and children, as prescribed by federal regulations and state requirements, and, as approved by the Washington state WIC program.

(26) "Trafficking" means buying or selling WIC checks for cash.

(27) "WIC program" or "program" means the federally funded special supplemental nutrition program for women, infants, and children administered in Washington state by the department of health.

(28) "WIC program requirements" or "program requirements" mean the rules contractors and retailers must follow to participate in the WIC program. The rules are explained in the federal regulations, the retailer contract, the *Retailer Selection Criteria, the WIC Approved Foods - Minimum Stock Levels, the WIC Retailer Handbook*, and the WIC approved formula supplier list.

(29) "WIC retailer" or "retailer" means an individual store authorized to participate in the WIC program.

(30) "Wholesaler" or "distributor" or "supplier" means a business licensed to sell food and other items to a retailer for resale.

(31) "WIC check" means a negotiable instrument issued to and used by a WIC client, caregiver, or alternate endorser to obtain specified supplemental WIC foods from a WIC retailer.

(32) "WIC client" or "client" means a woman who is pregnant, breastfeeding, or postpartum, an infant, or a young child receiving WIC benefits.

(33) "WIC only store" means a for-profit business model that focuses primarily on stocking WIC food items and serving WIC customers.

[Statutory Authority: RCW 43.70.120 and 7 C.F.R. 246. 06-05-051, § 246-790-010, filed 2/13/06, effective 3/16/06; 02-11-107, § 246-790-010, filed 5/20/02, effective 6/20/02. Statutory Authority: RCW 43.70.120 and 7 C.F.R. 246.12, 15, and 18. 00-13-009, § 246-790-010, filed 6/9/00, effective 7/10/00. Statutory Authority: RCW 43.70.120. 97-16-117, § 246-790-010, filed 8/6/97, effective 9/6/97; 92-22-036 (Order 314), § 246-790-010, filed 10/27/92, effective 11/27/92. Statutory Authority: RCW 43.17.060, 43.21C.120 and 43.20A.550. 91-01-098 (Order 3118), § 246-790-010, filed 12/18/90, effective 1/18/91.]

WAC 246-790-050 What is the WIC program? (1) The WIC program in the state of Washington is administered by the department of health.

(2) The WIC program is a federally funded program established in 1972 by an amendment to the Child Nutrition Act of 1966. The purpose of the program is to provide nutrition and health assessment; nutrition education; nutritious food; breastfeeding counseling; and referral services to pregnant, breastfeeding, and postpartum women, infants, and young children in specific risk categories.

(3) Federal regulations governing the WIC program (7 CFR Part 246) require implementation of standards and procedures to guide the state's administration of the WIC program and are hereby incorporated in this rule by reference. These regulations define the rights, responsibilities, and legal procedures of WIC employees, clients, persons acting on behalf of a client, and retailers. They are designed to promote:

(a) High quality nutrition services;

(b) Consistent application of policies and procedures for eligibility determination;

(c) Consistent application of policies and procedures for food benefit issuance and delivery; and

(d) WIC program compliance.

(4) The WIC program implements policies and procedures stated in program manuals, handbooks, contracts, forms, and other program documents approved by the USDA Food and Nutrition Service.

(5) The WIC program may impose sanctions against WIC clients for not following WIC program rules stated on the WIC rights and responsibilities.

(6) The WIC program may impose monetary penalties against persons who misuse WIC checks or WIC food but who are not WIC clients.

[Statutory Authority: RCW 43.70.120 and 7 C.F.R. 246. 06-05-051, § 246-790-050, filed 2/13/06, effective 3/16/06; 02-11-107, § 246-790-050, filed 5/20/02, effective 6/20/02. Statutory Authority: RCW 43.70.120 and 7 C.F.R. 246.12, 15, and 18. 00-13-009, § 246-790-050, filed 6/9/00, effective 7/10/00. Statutory Authority: RCW 43.70.120. 97-16-117, § 246-790-050, filed 8/6/97, effective 9/6/97; 92-22-036 (Order 314), § 246-790-050, filed 10/27/92, effective 11/27/92. Statutory Authority: RCW 43.20A.550. 91-01-097 (Order 3117), recodified as § 246-790-050, filed 12/18/90, effective 1/18/91; 90-12-112 (Order 2960), § 388-19-005, filed 6/6/90, effective 7/7/90; 88-14-037 (Order 2638), § 388-19-005, filed 6/30/88.]

WAC 246-790-060 What are WIC authorized foods? (1) WIC eligible women, infants, and children receive supplemental WIC foods from one or more of the following food categories. These foods must meet nutritional standards established by federal regulations and state requirements.

(2) The food categories are:

(a) Cereals,

(b) Juices,

(c) Infant formula,

(d) Infant cereal,

(e) Liquid nutritional supplements,

(f) Milk,

(g) Eggs,

(h) Dry beans and peas,

(i) Peanut butter,

(j) Cheese,

(k) Tuna, and

(l) Carrots.

(3) Additionally, the WIC program approves a reasonable selection of nutritious foods within each food category with the following factors in mind: Cost, client health, client preference, easy identification of approved foods, and consistency with sound buying practices.

(4) The WIC program limits the selection of WIC approved foods in accordance with federal cost containment requirements, including, but not limited to, the competitive procurement of a single manufacturer's infant formula.

[Statutory Authority: RCW 43.70.120 and 7 C.F.R. 246. 06-05-051, § 246-790-060, filed 2/13/06, effective 3/16/06. Statutory Authority: RCW 43.70.120 and 7 C.F.R. 246.12, 15, and 18. 00-13-009, § 246-790-060, filed 6/9/00, effective 7/10/00. Statutory Authority: RCW 43.70.120. 97-16-117, § 246-790-060, filed 8/6/97, effective 9/6/97; 92-22-036 (Order 314), § 246-790-060, filed 10/27/92, effective 11/27/92. Statutory Authority: RCW 43.20A.550. 91-01-097 (Order 3117), recodified as § 246-790-060, filed 12/18/90, effective 1/18/91; 90-12-112 (Order 2960), § 388-19-015, filed 6/6/90, effective 7/7/90; 88-14-037 (Order 2638), § 388-19-015, filed 6/30/88.]

WAC 246-790-065 What is the process for getting a food WIC authorized? (1) The procedure for authorizing a food is:

(a) A food company or other entity submits a written request to the WIC program asking for approval of a food.

(b) A food company must provide:

(i) Package flats or labels, information on package sizes and prices, and a summary of current distribution, including identification of the wholesaler(s) carrying the food; and

(ii) Dates when a new food replaces the current food on store shelves when there is a change in formulation.

(c) The WIC program verifies that a food considered for approval fits within one of the authorized food categories, meets the federal requirements of nutritional standards, is currently available to retailers, and has been available to retailers for at least one year;

(d) The WIC program periodically surveys local WIC agency staff and clients for their recommendations regarding need and demand for the food;

(e) The WIC program reviews data and recommendations and notifies the food company whether or not a food is approved.

(2) Food companies must notify the WIC program in writing of any changes in product formulation, product name, packaging, label design, size, or availability. A food company must notify the WIC program of any changes before any Washington state wholesaler, distributor, or supplier receives the new product.

(3) If a food company fails to notify the WIC program of any changes, the WIC program may revoke or deny WIC approval of the product.

(4) The WIC program may require a food company to submit a statement guaranteeing a minimum period of time

during which a food will be available in the state of Washington.

(5) The WIC program refuses to approve any food that contradicts the nutrition principles promoted by the WIC program.

(6) The WIC program may limit the number of approved foods within a food category.

(7) The WIC program may reassess any WIC approved food at any time.

(8) The WIC program may evaluate a food for approval outside of the three-year food review cycle if necessary.

(9) A food company or other entity must obtain written approval from the WIC program before using the term "WIC approved" or the WIC program logo.

[Statutory Authority: RCW 43.70.120 and 7 C.F.R. 246. 06-05-051, § 246-790-065, filed 2/13/06, effective 3/16/06; 02-11-107, § 246-790-065, filed 5/20/02, effective 6/20/02. Statutory Authority: RCW 43.70.120 and 7 C.F.R. 246.12, 15, and 18. 00-13-009, § 246-790-065, filed 6/9/00, effective 7/10/00.]

WAC 246-790-070 How do I become a WIC retailer? (1) Retailers interested in participating in the WIC program must apply for authorization.

(2) Applications for WIC authorization are accepted during the open application period held before the start of each new contract cycle. Exceptions to this time frame are considered when a WIC authorized retailer closes or ownership changes. Exceptions are based solely on the program's determination of program need and effective administration of the program. The WIC program may further limit acceptance of new applications as needed.

(3) The WIC program may require applicant retailers to provide shelf price records and inventory records showing all purchases, both wholesale and retail, including but not limited to, wholesale receipts, cash and carry receipts, purchase orders, books of account, invoices that identify the quantity and prices of specific WIC foods and other pertinent records that substantiate shelf prices and where, when, and how much of each item was purchased. Records without specific identification of the name of the business where the food was purchased, the date purchased, the quantity, unit price, and name of food purchased are not acceptable as evidence.

(4) The WIC program conducts on-site preauthorization visits to verify the information provided on the application, to evaluate the shelf prices and inventory of WIC foods, and to provide training on WIC requirements.

(5) The WIC program will not offer a contract to a retailer if, during the on-site preauthorization visit, they are unable to satisfactorily verify the information provided on the application or the retailer fails to participate in the initial training offered.

(6) The WIC program authorizes a sufficient number, type, and distribution of retailers to meet program need and effectively administer the program.

(7) The WIC program will not authorize for-profit WIC only stores.

(8) Per 7 CFR 246.12 (h)(3)(xxi), WIC program authorization is not a right or property interest. Authorization is discretionary and is based solely on the WIC program's determination of program need and effective administration of the program.

(9) The WIC program bases selection of authorized retailers on the following:

(a) Program need. The program mission is to improve the lifelong health and nutrition of women, infants, and children in Washington state. Meeting this mission is the foundation for selection of authorized retailers. Retailers are selected to provide clients reasonable access to the nutrition provided by WIC foods.

(b) Check volume.

(i) Retailers applying for reauthorization must take an average of at least forty checks per month in a six-month period.

(ii) Retailers with no WIC history will be on probation for one year or to the end of the contract period, whichever comes first. The WIC program will evaluate the retailer's check volume at the end of the probation and may take action to end the contract.

(c) WIC approved foods.

(i) Retailers must have on their shelves:

(A) At least the minimum quantities of WIC approved foods as specified in the WIC approved foods - Minimum stock levels when they apply.

(B) The minimum quantity of the WIC contract infant formulas for at least one to two infants, using the quantities specified in the *WIC Approved Foods - Minimum Stock Levels*.

(C) At least the minimum variety of items from all WIC food categories as specified in the *WIC Approved Foods - Minimum Stock Levels*.

(D) WIC approved foods with current shelf lives.

(ii) Retailers must:

(A) Maintain minimum stock levels throughout the contract period.

(B) Purchase infant formula only from a wholesaler, distributor, retailer, or supplier approved by the WIC program.

(C) Be prepared to provide documentation identifying where they buy infant formula.

(d) Prices of WIC approved foods.

A retailer must agree to and maintain prices of individual WIC foods at or less than the maximum price within their assigned peer group as determined by the WIC program.

(e) Business operations.

Retailers must:

(i) Have a valid Washington state tax registration (UBI) number. Oregon and Idaho retailers must have all valid licenses required by their respective state.

(ii) Have an activated food stamp authorization number. Pharmacies are exempt from this requirement.

(iii) Operate from a fixed, permanent location.

(iv) Be a full line/full service retailer that stocks a variety of staple foods on a continuous basis in addition to WIC approved foods. Staple foods include fresh, frozen, and/or canned unbreaded meat, poultry, fruits, and vegetables, dairy products, and grain products, such as bread, rice, and pasta.

(v) Be open for business at least eight hours per day, six days per week.

(vi) Accept cash and food stamp EBT.

(vii) Receive or be expected to receive no more than fifty percent of their total annual food sales from WIC transactions.

(f) Business integrity.

(i) The WIC program will not authorize a retailer if, in the last six years, the retailer has been disqualified from WIC or the food stamp program or has been assessed a monetary penalty instead of a food stamp disqualification. Exceptions may be considered based on program need.

(ii) An owner, officer, or partner of a retailer must not have sold a store in order to avoid a WIC sanction.

(iii) The WIC program will deny or revoke a retailer's WIC authorization if any of the owners, officers, partners, or managers has been convicted of or had a civil judgment for fraud, antitrust violations, embezzlement, theft, forgery, bribery, falsification or destruction of records, making false statements, receiving stolen property, making false claims, or obstruction of justice in the last six years.

(g) Compliance with the WIC contract.

(i) A retailer must attend training on WIC requirements at least once per contract period.

(ii) A retailer must comply with all program requirements.

(10) A retailer must meet all the selection criteria to be considered for WIC authorization and, once authorized, must continue to meet the selection criteria throughout the term of the contract. Exceptions may be made for pharmacies needed to supply special infant formulas or retailers in isolated areas.

(11) The WIC program must deny a retailer authorization for failure to meet any of the stated selection criteria.

(12) The WIC program may review an authorized retailer's compliance with the retailer selection criteria any time in the contract period and must end the contract of any retailer which fails to meet them.

[Statutory Authority: RCW 43.70.120 and 7 C.F.R. 246. 06-05-051, § 246-790-070, filed 2/13/06, effective 3/16/06; 02-11-107, § 246-790-070, filed 5/20/02, effective 6/20/02. Statutory Authority: RCW 43.70.120 and 7 C.F.R. 246.12, 15, and 18. 00-13-009, § 246-790-070, filed 6/9/00, effective 7/10/00. Statutory Authority: RCW 43.70.120. 97-16-117, § 246-790-070, filed 8/6/97, effective 9/6/97; 92-22-036 (Order 314), § 246-790-070, filed 10/27/92, effective 11/27/92; 91-06-029 (Order 145), § 246-790-070, filed 2/26/91, effective 3/29/91. Statutory Authority: RCW 43.20A.550. 91-01-097 (Order 3117), recodified as § 246-790-070, filed 12/18/90, effective 1/18/91; 90-12-112 (Order 2960), § 388-19-020, filed 6/6/90, effective 7/7/90; 88-18-022 (Order 2681), § 388-19-020, filed 8/30/88; 88-14-037 (Order 2638), § 388-19-020, filed 6/30/88.]

WAC 246-790-080 What do I need to know about WIC retailer contracts? (1) All selected retailers must enter into written contracts with the WIC program. The contractor and the designee of the contracting officer of the department of health must each sign the contract.

(2) The contract lists all authorized retailer locations by name and address. Individual retailers may be added, changed, disqualified, or deleted by contract amendment without affecting the remaining authorized retailer locations.

(3) The WIC program issues contracts for a maximum period of three years.

(4) Neither the WIC program nor the contractor is obligated to recontract. The WIC program will notify contractors and retailers in writing not less than fifteen days before the expiration of a contract.

(5) Authorization is valid for no longer than the period stated in the contract. The retailer must reapply to be considered for subsequent authorization.

(6) The contractor or the WIC program may end the contract at any time by submitting a written notice to the other party with thirty days advance notice.

(7) The contract is null and void in the event of a retailer closure or change in ownership.

(8) The contractor cannot voluntarily withdraw from participating in the WIC program in order to avoid being disqualified.

[Statutory Authority: RCW 43.70.120 and 7 C.F.R. 246. 06-05-051, § 246-790-080, filed 2/13/06, effective 3/16/06; 02-11-107, § 246-790-080, filed 5/20/02, effective 6/20/02. Statutory Authority: RCW 43.70.120 and 7 C.F.R. 246.12, 15, and 18. 00-13-009, § 246-790-080, filed 6/9/00, effective 7/10/00. Statutory Authority: RCW 43.70.120. 97-16-117, § 246-790-080, filed 8/6/97, effective 9/6/97; 92-22-036 (Order 314), § 246-790-080, filed 10/27/92, effective 11/27/92; 91-23-078 (Order 215), § 246-790-080, filed 11/19/91, effective 12/20/91. Statutory Authority: RCW 43.20A.550. 91-01-097 (Order 3117), recodified as § 246-790-080, filed 12/18/90, effective 1/18/91; 90-12-112 (Order 2960), § 388-19-025, filed 6/6/90, effective 7/7/90; 88-14-037 (Order 2638), § 388-19-025, filed 6/30/88.]

WAC 246-790-085 What is expected of WIC retailers? (1) Retailers must comply with WIC program requirements and terms of the retailer contract, including any changes that occur during the contract period.

(2) The WIC program will notify contractors and retailers of any changes to WIC program requirements in a timely manner.

(3) Retailers must provide access to their facilities at all reasonable times for WIC program representatives to monitor, to provide training or technical assistance, and to evaluate performance, compliance, and quality assurance.

(4) Retailers must provide access to redeemed WIC checks for the purpose of review by the program representative during any on-site visit.

(5) Retailers must maintain inventory records, and provide WIC program representatives access to those records on request, showing all purchases, both wholesale and retail, for a period of at least one year after the expiration of the contract with the WIC program. These inventory records include, but are not limited to, shelf price records, wholesale receipts, cash and carry receipts, purchase orders, books of account, invoices that identify the quantity and prices of specific WIC foods, and other pertinent records that substantiate shelf prices and where, when, and how much of each item was purchased. Records without specific identification of the name of the business where the food was purchased, the date purchased, the quantity, unit price, and name of food purchased are not acceptable as evidence.

(6) Contractors and retailers must observe time lines, such as deadlines for submitting price lists and returning properly signed contracts. Failure to do so may result in denial or termination of authorization.

(7) Retailers must take corrective action as directed by the WIC program.

[Statutory Authority: RCW 43.70.120 and 7 C.F.R. 246. 06-05-051, § 246-790-085, filed 2/13/06, effective 3/16/06; 02-11-107, § 246-790-085, filed 5/20/02, effective 6/20/02. Statutory Authority: RCW 43.70.120 and 7 C.F.R. 246.12, 15, and 18. 00-13-009, § 246-790-085, filed 6/9/00, effective 7/10/00. Statutory Authority: RCW 43.70.120. 97-16-117, § 246-790-085, filed 8/6/97, effective 9/6/97.]

WAC 246-790-090 How are WIC retailer contracts monitored? (1) The WIC program reviews retailers to mon-

itor compliance with program requirements in the following ways.

(2) Preauthorization visits.

(a) Visit is scheduled in advance.

(b) The WIC program representative confirms the information on the application, including information on WIC food stock levels and shelf prices.

(c) The WIC program representative provides training on the purpose of the program, WIC approved foods, required minimum stock levels, check handling procedures, sanctions, complaints, and claims.

(d) The retailer signs the preauthorization visit form verifying receipt of the training, understanding of program requirements, and the commitment to train store personnel.

(3) Compliance visits.

(a) Visit may or may not be scheduled in advance;

(b) The WIC program representative may do some or all of the following during a visit: Review WIC check handling procedures, WIC food stock levels, pull dates, shelf prices, WIC checks negotiated but not yet deposited, shelf price records, wholesale receipts, cash and carry receipts, purchase orders, books of account, invoices that identify the quantity and prices of specific WIC foods, and other pertinent records that substantiate the name of the business where the food was purchased, the date purchased, the quantities purchased, and prices charged; provide training or technical assistance; and verify implementation of a corrective action plan.

(c) The WIC program representative documents the name of the retailer, the name of the program representative, the names of all persons interviewed, the date of the visit, any problems or concerns detected, any corrective action plan required if problems are detected, and the signatures of the program representative and the retailer.

(d) The WIC program representative follows up in writing with the retailer if the retailer needs to correct a problem discovered during the compliance visit.

(4) Compliance purchases.

(a) The WIC program representative acts covertly;

(b) The program representative may make a purchase using WIC checks or may attempt trafficking;

(c) The WIC program representative completes a report itemizing information including, but not limited to, a description of the checker involved, the time and date of the transaction, the number of check stands opened and closed, other customers in line, exact items purchased and/or refused, the prices charged, comments of the checker, observations of the investigator or the investigative aide, any stock deficiencies noted, any other pertinent information, and the signature of the investigator.

(5) Price audits. The WIC program reviews actual prices charged by retailers on an ongoing basis.

(6) Inventory audits.

(a) The WIC program representative requests inventory records showing all purchases, both wholesale and retail.

(b) Acceptable forms of inventory records include wholesale receipts, cash and carry receipts, purchase orders, books of account, invoices that identify the quantity and prices of specific WIC foods, and other pertinent records that verify prices, name of the business where the food was purchased, the date purchased, and the quantity purchased.

(c) Records without specific identification of the name of the business where the food was purchased, the date purchased, quantity, unit price, and name of food are not acceptable as evidence.

(d) The WIC program representative compares the inventory records provided by the retailer with information from preaudit on-site visits and the WIC data system to determine any shortfalls in inventory compared to WIC redemptions.

(7) Selection criteria reviews.

(a) The WIC program may review a retailer's compliance with the retailer selection criteria any time during the contract period.

(b) The WIC program will review a new retailer's compliance with the retailer selection criteria at the end of their probation period.

[Statutory Authority: RCW 43.70.120 and 7 C.F.R. 246. 06-05-051, § 246-790-090, filed 2/13/06, effective 3/16/06; 02-11-107, § 246-790-090, filed 5/20/02, effective 6/20/02. Statutory Authority: RCW 43.70.120 and 7 C.F.R. 246.12, 15, and 18. 00-13-009, § 246-790-090, filed 6/9/00, effective 7/10/00. Statutory Authority: RCW 43.70.120. 97-16-117, § 246-790-090, filed 8/6/97, effective 9/6/97; 92-22-036 (Order 314), § 246-790-090, filed 10/27/92, effective 11/27/92. Statutory Authority: RCW 43.20A.550. 91-01-097 (Order 3117), recodified as § 246-790-090, filed 12/18/90, effective 1/18/91; 90-12-112 (Order 2960), § 388-19-030, filed 6/6/90, effective 7/7/90; 88-14-037 (Order 2638), § 388-19-030, filed 6/30/88.]

WAC 246-790-100 What happens if I don't comply with the WIC retailer contract or requirements? (1) Retailers who do not comply with WIC program requirements are at risk of losing their contract with the WIC program and may be liable to prosecution in accordance with federal regulations (7 CFR 246.12 and 7 CFR 246.23). Examples of noncompliance include, but are not limited to:

(a) Buying or selling WIC checks for cash (trafficking);

(b) Selling firearms, ammunition, explosives, or controlled substances for WIC checks;

(c) Selling alcohol, alcoholic beverages, or tobacco products for WIC checks;

(d) Buying infant formula from a wholesaler, distributor, retailer, or supplier not approved by the WIC program;

(e) Charging WIC for food not available to buy and having no documentation of having had enough food on the shelf for WIC clients to buy;

(f) Providing unauthorized food or other items to WIC clients instead of, or in addition to, WIC approved foods;

(g) Selling or offering to sell foods with expired shelf lives;

(h) Selling more food than allowed on the WIC check;

(i) Charging the WIC program for foods not received by the client;

(j) Charging the WIC program more for WIC approved foods than other customers are charged for the same food;

(k) Providing credit or nonfood items to clients in a WIC transaction;

(l) Asking WIC clients for cash or giving change in a WIC transaction;

(m) Redeeming WIC checks outside of authorized channels. For example, a retailer accepting WIC checks without having a signed contract with the WIC program; a retailer using WIC checks to repay debt at a different authorized

retailer; or a retailer who receives and deposits the WIC checks from an unauthorized source.

(n) Failing to write the actual purchase price on the WIC check at the time of the WIC transaction;

(o) Failing to maintain adequate stock of WIC foods on the retailer's shelves; and

(p) Providing false information in connection with an application for WIC authorization.

(2) A retailer who willfully misapplies, steals, or fraudulently obtains WIC program funds valued at more than one hundred dollars will be subject to a monetary penalty of not more than twenty-five thousand dollars, imprisonment up to five years, or both. If the value of the funds is less than one hundred dollars, the sanctions are a monetary penalty of not more than one thousand dollars, imprisonment up to one year, or both.

(3) The WIC program may deny payment to, impose monetary penalties on, and disqualify retailers for noncompliance with WIC program requirements and terms of the retailer contract.

(4) The WIC program must seek reimbursement from retailers for documented overcharges and for payments made on improperly handled WIC checks.

(5) Retailers who do not comply with WIC program requirements, except for the offenses listed in the first five rows of the table in subsection (7) of this section, will be notified by the WIC program and given the opportunity to correct the problem. Methods of notification include, but are not limited to, technical assistance contacts and notice of correction letters. After the opportunity for corrective action, a retailer who still does not comply will be subject to sanctions.

(6) When the WIC program denies payment, imposes a monetary penalty, requests reimbursement, or disqualifies a retailer, the program must give the contractor written notice not less than fifteen days prior to the effective date of the action. Denial of authorization and permanent disqualification are effective the date the contractor receives the notice. Every notice must state what action is being taken, the effective date of the action, and the procedure for requesting an appeal hearing if the action is one that can be appealed.

(7) Per 7 CFR 246.12(l), the WIC program must sanction a retailer for the following:

	Violation	**Length of Disqualification**
Mandatory disqualification - no opportunity for correction	Disqualification from the food stamp program by the USDA food and nutrition service;	Time period corresponding to food stamp program disqualification
	Conviction for trafficking in WIC checks or exchanging firearms, ammunition, explosives, or controlled substances for WIC checks;	Permanent
	One incidence of trafficking in WIC checks;	Six years
	One incidence of exchanging firearms, ammunition, explosives, or controlled substances for WIC checks;	Six years
	One incidence of exchanging alcohol, alcoholic beverages, or tobacco products for WIC checks;	Three years
Notification and opportunity to correct before disqualification or monetary penalty	A documented pattern of charging WIC for food not available to buy and having no documentation of having had enough food on the shelf for WIC clients to buy;	Three years
	A documented pattern of overcharging, including charging more than the shelf price and charging more than for non-WIC customers;	Three years
	A documented pattern of charging for food not received by the client;	Three years
	A documented pattern of redeeming WIC checks outside of authorized channels;	Three years
	A documented pattern of providing credit or nonfood items, other than alcohol, alcoholic beverages, tobacco products, cash, firearms, ammunition, explosives, or controlled substances as defined	Three years

	Violation	Length of Disqualification
	in 21 N.S.C. 802, in exchange for WIC checks;	
	A documented pattern of selling unauthorized foods or selling more than the amount of food listed on the WIC check.	One year
	A documented pattern of purchasing infant formula from a person or business other than a wholesaler, distributor, retailer, or supplier approved by the WIC program.	One year
	A documented pattern of having no documentation that identifies where infant formula was purchased.	One year

(8) At the end of the disqualification period, the retailer must reapply to be considered for authorization.

(9) Prior to disqualifying a retailer, the WIC program considers program need. If the WIC program determines a retailer's disqualification prevents clients from getting their WIC foods, the WIC program may impose a monetary penalty instead of disqualification.

(10) Monetary penalties are calculated in accordance with federal regulations using the following formula:

(a) Average the retailer's monthly volume of WIC business over at least the six-month period ending with the month preceding when the notice to the retailer is dated;

(b) Multiply the average by ten percent (.10);

(c) Multiply that number by the number of months for which the store would be disqualified. This is the amount of the monetary penalty.

(11) Monetary penalties must not exceed ten thousand dollars for each documented violation, except for convictions for trafficking WIC checks and for selling firearms, ammunition, explosives, or controlled substances for WIC checks. For these violations requiring permanent disqualification, the monetary penalty is eleven thousand dollars. If several violations are documented during the course of one investigation, the WIC program must impose a monetary penalty for each violation, not to exceed a total of forty thousand dollars, except for convictions for trafficking WIC checks and for selling firearms, ammunition, explosives, or controlled substances for WIC checks. In this case, the monetary penalty is not to exceed forty-four thousand dollars.

(12) Monetary penalties and reimbursements must be paid to the revenue section of the department within the time period specified in the notice. Retailers who fail to pay within the time period specified in the notice will be referred to a collection agency and disqualified for the length of time corresponding to the violation.

(13) When a retailer who has already been sanctioned for noncompliance is found out of compliance again, the WIC program must double the sanction. A monetary penalty instead of disqualification is not an option for third or subsequent incidences of noncompliance.

(14) A contractor who fails to notify the WIC program of closure or a change in ownership, retailer name, and/or location is liable for resultant costs incurred by the WIC program.

[Statutory Authority: RCW 43.70.120 and 7 C.F.R. 246. 06-05-051, § 246-790-100, filed 2/13/06, effective 3/16/06; 02-11-107, § 246-790-100, filed 5/20/02, effective 6/20/02. Statutory Authority: RCW 43.70.120 and 7 C.F.R. 246.12, 15, and 18. 00-13-009, § 246-790-100, filed 6/9/00, effective 7/10/00. Statutory Authority: RCW 43.70.120. 97-16-117, § 246-790-100, filed 8/6/97, effective 9/6/97; 92-22-036 (Order 314), § 246-790-100, filed 10/27/92, effective 11/27/92. Statutory Authority: RCW 43.20A.550. 91-01-097 (Order 3117), recodified as § 246-790-100, filed 12/18/90, effective 1/18/91; 90-12-112 (Order 2960), § 388-19-035, filed 6/6/90, effective 7/7/90; 88-14-037 (Order 2638), § 388-19-035, filed 6/30/88.]

WAC 246-790-120 How do I appeal a WIC decision I don't agree with? (1) A request for an appeal hearing must be in writing and must:

(a) State the issue;

(b) Contain a summary of the retailer's position on the issue, indicating whether each charge is admitted, denied, or not contested;

(c) State the name and address of the contractor and retailer requesting the appeal hearing;

(d) State the name and address of the attorney representing the retailer, if applicable;

(e) State the retailer's need for an interpreter or other special accommodations, if necessary; and

(f) Have a copy of the notice from the program attached.

(2) A request for an appeal hearing must be filed at the Department of Health, Adjudicative Service Unit, P.O. Box 47879, Olympia, WA 98504-7879, with a copy sent to the WIC program at P.O. Box 47886, Olympia, WA 98504-7886. The request must be made in writing within twenty days of the date the retailer received the notice.

(3) The decision concerning the appeal must be made within ninety days from the date the request for an appeal hearing was received by the adjudicative service unit. The time for rendering the decision may be extended by as many days as all parties agree to with good cause.

(4) The retailer may not appeal:

(a) Expiration of a WIC contract;

(b) The validity or appropriateness of criteria used to determine program need and effective administration of the program;

(c) Determinations regarding program need and effective administration of the program;

(d) The validity or appropriateness of retailer limiting or selection criteria;

(e) The validity or appropriateness of the WIC program's criteria for determining whether a retailer receives or is

expected to receive more than fifty percent of their total annual food sales from WIC transactions.

(f) The WIC program's determination whether the retailer had an effective policy and program in place to prevent trafficking and whether ownership was aware of, approved of, or was involved in the violation;

(g) Disputes regarding check payments and claims (other than the opportunity to justify or correct an overcharge or other check error); and

(h) Disqualification based on a food stamp program disqualification.

(5) When the action being appealed is disqualification, the retailer must cease redeeming WIC checks effective the date specified in the notice and must not accept WIC checks during the appeal period. The WIC program will not pay any WIC checks redeemed by a retailer during a period of disqualification.

[Statutory Authority: RCW 43.70.120 and 7 C.F.R. 246. 06-05-051, § 246-790-120, filed 2/13/06, effective 3/16/06; 02-11-107, § 246-790-120, filed 5/20/02, effective 6/20/02. Statutory Authority: RCW 43.70.120 and 7 C.F.R. 246.12, 15, and 18. 00-13-009, § 246-790-120, filed 6/9/00, effective 7/10/00. Statutory Authority: RCW 43.70.120. 97-16-117, § 246-790-120, filed 8/6/97, effective 9/6/97; 92-22-036 (Order 314), § 246-790-120, filed 10/27/92, effective 11/27/92. Statutory Authority: RCW 43.20A.550. 91-01-097 (Order 3117), recodified as § 246-790-120, filed 12/18/90, effective 1/18/91; 90-12-112 (Order 2960), § 388-19-045, filed 6/6/90, effective 7/7/90; 88-18-022 (Order 2681), § 388-19-045, filed 8/30/88; 88-14-037 (Order 2638), § 388-19-045, filed 6/30/88.]

WAC 246-790-130 How does the WIC program get input from the food industry? (1) The WIC program may establish a retailer advisory committee for the purpose of soliciting input on policies, procedures, and other matters pertinent to retailer participation in the WIC program.

(2) The retailer advisory committee meets at least two times per year.

(3) The membership of the retailer advisory committee consists of representation from at least the following:

(a) Washington food industry;

(b) Large chain;

(c) Small chain;

(d) Independent retailer (single store);

(e) Minority-owned retailer;

(f) Military commissary;

(g) Loss prevention or risk manager or human resources representative from any size retailer;

(h) Technical college checker training program instructor;

(i) Local WIC agency staff person;

(j) Current or former WIC client; and

(k) A union representative.

[Statutory Authority: RCW 43.70.120 and 7 C.F.R. 246. 06-05-051, § 246-790-130, filed 2/13/06, effective 3/16/06; 02-11-107, § 246-790-130, filed 5/20/02, effective 6/20/02. Statutory Authority: RCW 43.70.120 and 7 C.F.R. 246.12, 15, and 18. 00-13-009, § 246-790-130, filed 6/9/00, effective 7/10/00. Statutory Authority: RCW 43.70.120. 97-16-117, § 246-790-130, filed 8/6/97, effective 9/6/97; 92-22-036 (Order 314), § 246-790-130, filed 10/27/92, effective 11/27/92. Statutory Authority: RCW 43.20A.550. 91-01-097 (Order 3117), recodified as § 246-790-130, filed 12/18/90, effective 1/18/91; 88-18-022 (Order 2681), § 388-19-050, filed 8/30/88; 88-14-037 (Order 2638), § 388-19-050, filed 6/30/88.]

Chapter 246-800 WAC
GENERAL PROVISIONS—PROFESSIONALS

WAC

TRIPLICATE PRESCRIPTION FORM PROGRAM

246-800-101	Scope and purpose of chapter.
246-800-120	Official triplicate prescription forms.
246-800-130	Distribution and retention of the triplicate prescription forms.
246-800-140	Drugs administered or dispensed by the health care practitioner.
246-800-150	Emergency prescriptions.

TRIPLICATE PRESCRIPTION FORM PROGRAM

WAC 246-800-101 Scope and purpose of chapter. This chapter is intended to implement RCW 69.50.311. The purpose of this chapter is to establish a triplicate prescription program participation which may be imposed by the appropriate disciplinary authority upon licensed health care practitioners with prescription or dispensing authority. Participation in this triplicate prescription program may be required of licensees as a part of disciplinary action or board-supervision of the licensee's practice. The determination as to whether to impose participation in this program upon a licensee shall be within the sole discretion of the disciplinary authority.

[Statutory Authority: RCW 43.70.040. 91-02-049 (Order 121), recodified as § 246-800-101, filed 12/27/90, effective 1/31/91. Statutory Authority: RCW 69.50.311. 86-10-036 (Order 197), § 308-250-010, filed 5/5/86.]

WAC 246-800-120 Official triplicate prescription forms. Any licensed health care practitioner upon whom participation in the triplicate prescription form program is imposed shall obtain official triplicate prescription forms from the Washington state department of health. The practitioner shall pay a fee for these forms that is equal to the cost to the department of the forms. The official triplicate prescriptions forms shall be utilized by the practitioner with respect to the drug or drugs specified by the disciplinary authority. The official triplicate prescriptions forms utilized in this program will be sequentially numbered. The practitioner shall account for all numbered prescriptions provided to him or her.

[Statutory Authority: RCW 69.50.311. 92-02-018 (Order 224), § 246-800-120, filed 12/23/91, effective 1/23/92. Statutory Authority: RCW 43.70.040. 91-02-049 (Order 121), recodified as § 246-800-120, filed 12/27/90, effective 1/31/91. Statutory Authority: RCW 69.50.311. 86-10-036 (Order 197), § 308-250-020, filed 5/5/86.]

WAC 246-800-130 Distribution and retention of the triplicate prescription forms. The triplicate prescriptions utilized pursuant to this program shall be retained as follows:

(1) The original prescription shall be provided to the patient unless the drug is dispensed or administered to the patient by the practitioner, or if an emergency prescription is issued. In instances where the drug is dispensed or administered, the provisions of WAC 246-800-140 shall apply. In the case of an emergency prescription, the provisions of WAC 246-800-150 shall apply;

(2) One copy shall be transmitted to the department. These copies shall be transmitted to the department monthly unless otherwise directed by the disciplinary authority;

(3) One copy shall be retained by the health care practitioner and shall be available for inspection by an authorized representative of the department.

(4) Any official triplicate prescription forms improperly completed, damaged or otherwise not utilized shall be accounted for by the practitioner. An explanation and accounting for the forms not properly utilized, along with any improperly completed or damaged triplicate prescriptions forms shall be returned to the department along with the other copies to be submitted pursuant to this rule.

[Statutory Authority: RCW 69.50.311. 92-02-018 (Order 224), § 246-800-130, filed 12/23/91, effective 1/23/92. Statutory Authority: RCW 43.70.040. 91-02-049 (Order 121), recodified as § 246-800-130, filed 12/27/90, effective 1/31/91. Statutory Authority: RCW 69.50.311. 86-10-036 (Order 197), § 308-250-030, filed 5/5/86.]

WAC 246-800-140 Drugs administered or dispensed by the health care practitioner. A health care practitioner participating in the triplicate prescription program shall complete a prescription form for all drugs specified by the disciplinary authority. If the drugs are administered or dispensed to the patient, the original shall be transmitted to the department along with the copy as required by WAC 246-800-130.

[Statutory Authority: RCW 69.50.311. 92-02-018 (Order 224), § 246-800-140, filed 12/23/91, effective 1/23/92. Statutory Authority: RCW 43.70.040. 91-02-049 (Order 121), recodified as § 246-800-140, filed 12/27/90, effective 1/31/91. Statutory Authority: RCW 69.50.311. 86-10-036 (Order 197), § 308-250-040, filed 5/5/86.]

WAC 246-800-150 Emergency prescriptions. In an emergency, unless prohibited by the order of the disciplinary authority, a practitioner participating in this program may orally prescribe and a pharmacist may dispense a drug specified by the disciplinary authority to be included in the triplicate prescription program. For the purposes of this rule, "emergency" means that the immediate provision of the drug is necessary for proper treatment, that no alternative treatment is available and it is not possible for the practitioner to provide a written prescription for the drug. If such a drug is orally prescribed, the practitioner shall:

(1) Contemporaneously reduce the prescription to writing;

(2) Cause the original of the written prescription to be delivered to the pharmacy filling the prescription within 72 hours; and,

(3) Retain and transmit copies of the prescription as provided in WAC 246-800-130.

[Statutory Authority: RCW 69.50.311. 92-02-018 (Order 224), § 246-800-150, filed 12/23/91, effective 1/23/92. Statutory Authority: RCW 43.70.040. 91-02-049 (Order 121), recodified as § 246-800-150, filed 12/27/90, effective 1/31/91. Statutory Authority: RCW 69.50.311. 86-10-036 (Order 197), § 308-250-050, filed 5/5/86.]

Chapter 246-802 WAC
ACUPUNCTURISTS

WAC

246-802-010 Definitions.
246-802-025 Inactive status.
246-802-030 Approval of school, program, apprenticeship or tutorial instruction.
246-802-040 Western sciences.
246-802-050 Acupuncture sciences.
246-802-060 Clinical training.
246-802-070 Documents in foreign language.
246-802-080 Sufficiency of documents.
246-802-090 Examinations.
246-802-100 Consultation plan.
246-802-110 Referral to other health care practitioners.
246-802-120 Patient informed consent.
246-802-130 Application exhibits required.
246-802-140 Advertising.
246-802-160 General provisions.
246-802-170 Mandatory reporting.
246-802-180 Health care institutions.
246-802-190 Acupuncture associations or societies.
246-802-200 Health care service contractors and disability insurance carriers.
246-802-210 Professional liability carriers.
246-802-220 Courts.
246-802-230 State and federal agencies.
246-802-240 Cooperation with investigation.
246-802-250 AIDS prevention and information education requirements.
246-802-990 Acupuncture fees and renewal cycle.

DISPOSITION OF SECTIONS FORMERLY CODIFIED IN THIS CHAPTER

246-802-020 License renewal registration date and fee. [Statutory Authority: RCW 43.70.040. 91-02-049 (Order 121), recodified as § 246-802-020, filed 12/27/90, effective 1/31/91. Statutory Authority: RCW 18.06.160. 90-11-093 (Order 051), § 308-180-120, filed 5/18/90, effective 6/18/90; 88-07-031 (Order PM 713), § 308-180-120, filed 3/9/88; 86-10-038 (Order PL 592), § 308-180-120, filed 5/5/86.] Repealed by 98-05-060, filed 2/13/98, effective 3/16/98. Statutory Authority: RCW 43.70.280.

246-802-150 Examination appeal procedures. [Statutory Authority: RCW 43.70.040. 91-02-049 (Order 121), recodified as § 246-802-150, filed 12/27/90, effective 1/31/91. Statutory Authority: RCW 18.06.160. 88-07-031 (Order PM 713), § 308-180-280, filed 3/9/88.] Repealed by 92-17-035 (Order 295B), filed 8/13/92, effective 9/13/92. Statutory Authority: RCW 43.70.040.

WAC 246-802-010 Definitions. For the purpose of administering chapter 18.06 RCW, the following terms shall be considered in the following manner:

(1) "Acupuncture school" is an academic institution which has the sole purpose of offering training in acupuncture.

(2) "Acupuncture program" is training in acupuncture offered by an academic institution which also offers training in other areas of study. A program is an established area of study offered on a continuing basis.

(3) "Acupuncture apprenticeship" is training in acupuncture which is offered by a qualified acupuncture employer to an apprentice on the basis of an apprenticeship agreement between the employer and the apprentice. An apprenticeship is of limited duration and ceases at the time the parties to the apprenticeship agreement have performed their obligations under the agreement.

(4) "Acupuncture tutorial instruction" is training in acupuncture which is offered by an academic institution or qualified instructor on the basis of a tutorial agreement between the school or instructor and the student. A tutorial is of limited duration and ceases at the time the parties to the tutorial agreement have performed their obligations under the agreement.

(5) "Academic year" is three quarters or two semesters.

[Statutory Authority: RCW 43.70.040. 91-02-049 (Order 121), recodified as § 246-802-010, filed 12/27/90, effective 1/31/91. Statutory Authority: RCW 18.06.160. 87-06-050 (Order PM 641), § 308-180-130, filed 3/4/87.]

WAC 246-802-025 Inactive status. A practitioner may obtain an inactive credential. Refer to the requirements of chapter 246-12 WAC, Part 4.

[Statutory Authority: RCW 43.70.280. 98-05-060, § 246-802-025, filed 2/13/98, effective 3/16/98. Statutory Authority: RCW 43.70.040. 92-17-035 (Order 295B), § 246-802-025, filed 8/13/92, effective 9/13/92.]

WAC 246-802-030 Approval of school, program, apprenticeship or tutorial instruction. The department will consider for approval any school, program, apprenticeship or tutorial instruction which meets the requirements outlined in chapter 18.06 RCW and which provides all or part of the courses required in RCW 18.06.050.

(1) A school or program may be approved by the secretary without formal application to the department provided that:

(a) The school or program is accredited or has candidacy status as a United States postsecondary school or program; or

(b) The school or program is accredited under the procedures of another country and these procedures satisfy accreditation standards used for postsecondary education in the United States; or

(c) The nonaccredited school or program is approved by or has candidacy status with the National Accreditation Commission for Schools and Colleges of Acupuncture and Oriental Medicine; or

(d) The nonaccredited school or program is approved by the Washington state board of medical examiners to prepare persons for the practice of acupuncture.

(2) Approval of any other school, program, apprenticeship or tutorial instruction may be requested on a form provided by the department.

(3) Application for approval of a school, program, apprenticeship or tutorial instruction shall be made by the authorized representative of the school or the administrator of the apprenticeship or tutorial agreement.

(4) An applicant may request approval of the school, program, apprenticeship or tutorial instruction as of the date of the application or retroactively to a specified date.

(5) The application for approval of a school, program, apprenticeship or tutorial instruction shall include documentation required by the department pertaining to educational administration, qualifications of instructors, didactic and/or clinical facilities, and content of offered training.

(6) An application fee must accompany the completed application.

(7) The department will evaluate the application and, if necessary, conduct a site inspection of the school, program, apprenticeship or tutorial instruction prior to approval by the department.

(8) Upon completion of the evaluation of the application, the department may grant or deny approval, or grant approval conditioned upon appropriate modification to the application.

(9) In the event the department denies an application or grants conditional approval, the authorized representative of the applicant school or program or the administrator of the applicant apprenticeship or tutorial instruction may request a review within ninety days of the department's adverse action. Should a request for review of an adverse action be made after ninety days following the department's action, the contesting party may obtain review only by submitting a new application.

(10) The authorized representative of an approved school or program or the administrator of an apprenticeship or tutorial agreement shall notify the department of significant changes with respect to educational administration, instructor qualifications, facilities, or content of training.

(11) The department may inspect an approved school, program, apprenticeship or tutorial instruction at reasonable intervals for compliance. Approval may be withdrawn if the department finds failure to comply with the requirements of law, administrative rules, or representations in the application.

(12) The authorized representative of a school or administrator of an agreement must immediately correct deficiencies which resulted in withdrawal of the department's approval.

[Statutory Authority: RCW 43.70.040. 92-17-035 (Order 295B), § 246-802-030, filed 8/13/92, effective 9/13/92; 91-02-049 (Order 121), recodified as § 246-802-030, filed 12/27/90, effective 1/31/91. Statutory Authority: RCW 18.06.160. 87-06-050 (Order PM 641), § 308-180-140, filed 3/4/87.]

WAC 246-802-040 Western sciences. The training in western sciences shall consist of forty-five academic credits based on the quarter system in which a credit equals ten classroom contact hours at the collegiate level of instruction or equivalent. These forty-five academic credits shall consist of the following:

(1) Anatomy;
(2) Physiology;
(3) Microbiology;
(4) Biochemistry;
(5) Pathology;
(6) Survey of western clinical sciences;
(7) Hygiene; and
(8) Cardio-pulmonary resuscitation (CPR).

Training in hygiene and CPR shall consist of a minimum of one academic credit hour or equivalent in each subject. Red Cross certification or documentation of equivalent training may be substituted for one academic credit hour in CPR.

[Statutory Authority: RCW 43.70.040. 91-02-049 (Order 121), recodified as § 246-802-040, filed 12/27/90, effective 1/31/91. Statutory Authority: RCW 18.06.160. 90-12-114 (Order 052), § 308-180-150, filed 6/6/90, effective 7/7/90; 87-06-050 (Order PM 641), § 308-180-150, filed 3/4/87.]

WAC 246-802-050 Acupuncture sciences. The training in acupuncture sciences shall consist of seventy-five academic credits based on the quarter system in which a credit equals ten classroom contact hours at the collegiate level of instruction or equivalent. These seventy-five academic credits shall include the following subjects:

(1) Fundamental principles of acupuncture;
(2) Acupuncture diagnosis;
(3) Acupuncture pathology;
(4) Acupuncture therapeutics;
(5) Acupuncture meridians and points; and
(6) Acupuncture techniques, including electroacupuncture.

[Statutory Authority: RCW 43.70.040. 91-02-049 (Order 121), recodified as § 246-802-050, filed 12/27/90, effective 1/31/91. Statutory Authority: RCW 18.06.160. 87-06-050 (Order PM 641), § 308-180-160, filed 3/4/87.]

WAC 246-802-060 Clinical training. A student must complete a minimum of five hundred hours of supervised clinical training consisting of up to one hundred hours of observation which includes case presentation and discussion.

(1) A qualified instructor must observe and provide guidance to the student as appropriate, and must be available within the clinical facility to provide consultation and assistance to the student for patient treatments. Prior to initiation of each treatment, the instructor must have knowledge of and approve the diagnosis and treatment plan.

(2) "Patient treatment" includes:

(a) Conducting a patient intake interview concerning the patient's past and present medical history;

(b) Performing acupuncture examination and diagnosis;

(c) Discussion between the instructor and the student concerning the proposed diagnosis and treatment plan;

(d) Applying acupuncture treatment principles and techniques; and

(e) Charting of patient conditions, evaluative discussions and findings, and concluding remarks.

[Statutory Authority: RCW 18.06.160 and 18.06.050. 05-13-188, § 246-802-060, filed 6/22/05, effective 7/23/05. Statutory Authority: RCW 43.70.040. 91-02-049 (Order 121), recodified as § 246-802-060, filed 12/27/90, effective 1/31/91. Statutory Authority: RCW 18.06.160. 87-06-050 (Order PM 641), § 308-180-170, filed 3/4/87.]

WAC 246-802-070 Documents in foreign language. All documents submitted in a foreign language shall be accompanied by an accurate translation in English. Each translated document shall bear the affidavit of the translator certifying that the translator is competent in both the language of the document and the English language and that the translation is a true and complete translation of the foreign language original, and sworn to before a notary public. Translation of any document relative to a person's application shall be at the expense of the applicant.

[Statutory Authority: RCW 43.70.040. 91-02-049 (Order 121), recodified as § 246-802-070, filed 12/27/90, effective 1/31/91. Statutory Authority: RCW 18.06.160. 87-06-050 (Order PM 641), § 308-180-190, filed 3/4/87.]

WAC 246-802-080 Sufficiency of documents. In all cases the departments' decision as to the sufficiency of the documentation shall be final. The department may request further proof of qualification.

[Statutory Authority: RCW 43.70.040. 91-02-049 (Order 121), recodified as § 246-802-080, filed 12/27/90, effective 1/31/91. Statutory Authority: RCW 18.06.160. 87-06-050 (Order PM 641), § 308-180-200, filed 3/4/87.]

WAC 246-802-090 Examinations. (1) An examination shall be given twice yearly for qualified applicants.

(2) An applicant for certification as an acupuncturist shall pass the following examinations:

(a) National Commission for Certification of Acupuncturists (NCCA) written examination;

(b) NCCA point location examination; and

(c) NCCA-approved clean needle technique course.

(3) An applicant may take and pass the examinations in subsection (1) of this section in a language other than English if that applicant:

(a) Holds a degree or diploma or transfers from an institution in an English-speaking country; or

(b) Passes the test of English as a foreign language with a minimum score of 550.

[Statutory Authority: RCW 43.70.280. 98-05-060, § 246-802-090, filed 2/13/98, effective 3/16/98. Statutory Authority: RCW 43.70.040. 92-17-035 (Order 295B), § 246-802-090, filed 8/13/92, effective 9/13/92; 91-02-049 (Order 121), recodified as § 246-802-090, filed 12/27/90, effective 1/31/91. Statutory Authority: RCW 18.06.160. 90-12-114 (Order 052), § 308-180-210, filed 6/6/90, effective 7/7/90; 88-07-031 (Order PM 713), § 308-180-210, filed 3/9/88; 87-06-050 (Order PM 641), § 308-180-210, filed 3/4/87.]

WAC 246-802-100 Consultation plan. Every certified acupuncturist shall develop a written plan for consultation, emergency transfer, and referral. The written consultation plan must be kept on file at the practitioner's place of business and be available on request by the department or its representative. The written consultation plan must include:

(1) The name, address, and telephone numbers of two consulting physicians;

(2) The name, address, and a telephone number of the nearest emergency room facility;

(3) An emergency transport mechanism (i.e., ambulance) with the name, address, and telephone number of the dispatcher nearest to the location of practice; and

(4) Confirmation from the physicians listed as to their agreement to consult with and accept referred patients from the applicant upon becoming a certified acupuncturist and establishing a place of practice.

[Statutory Authority: RCW 43.70.040. 91-02-049 (Order 121), recodified as § 246-802-100, filed 12/27/90, effective 1/31/91. Statutory Authority: RCW 18.06.160. 88-07-031 (Order PM 713), § 308-180-220, filed 3/9/88; 87-06-050 (Order PM 641), § 308-180-220, filed 3/4/87.]

WAC 246-802-110 Referral to other health care practitioners. When the acupuncturist sees patients with potentially serious disorders including but not limited to:

(1) Cardiac conditions including uncontrolled hypertension;

(2) Acute abdominal symptoms;

(3) Acute undiagnosed neurological changes;

(4) Unexplained weight loss or gain in excess of fifteen percent body weight within a three-month period;

(5) Suspected fracture or dislocation;

(6) Suspected systemic infection;

(7) Any serious undiagnosed hemorrhagic disorder; and

(8) Acute respiratory distress without previous history or diagnosis.

The acupuncturist shall provide the following as medically prudent:

(a) The acupuncturist shall immediately request a consultation or written diagnosis from a physician licensed under chapter 18.71 or 18.57 RCW for patients with potentially serious disorders. In the event the patient refuses to authorize such consultation or provide a recent diagnosis from such physician, acupuncture treatment shall not be continued.

(b) In emergency situations the acupuncturist shall provide life support and emergency transport to the nearest licensed medical facility.

[Statutory Authority: RCW 43.70.040. 91-02-049 (Order 121), recodified as § 246-802-110, filed 12/27/90, effective 1/31/91. Statutory Authority: RCW 18.06.160. 87-06-050 (Order PM 641), § 308-180-230, filed 3/4/87.]

WAC 246-802-120 Patient informed consent. The patient informed consent is to advise the patient of the credentials of the practitioner and the scope of practice of acupuncturists in the state of Washington. The following information must be furnished to each patient in writing prior to or at the time of the initial patient visit.

(1) Practitioner's qualifications, including:

(a) Education. Dates and location(s) of didactic and clinical training.

(b) License information, including:

(i) State license number;

(ii) Date of licensure;

(iii) Licensure in other states or jurisdiction.

(2) The "scope of practice" for an acupuncturist in the state of Washington includes but is not limited to the following list of techniques:

(a) Use of acupuncture needles to stimulate acupuncture points and meridians;

(b) Use of electrical, mechanical, or magnetic devices to stimulate acupuncture points and meridians;

(c) Moxibustion;

(d) Acupressure;

(e) Cupping;

(f) Dermal friction technique (gwa hsa);

(g) Infra-red;

(h) Sonopuncture;

(i) Lasarpuncture;

(j) Dietary advice based on traditional Chinese medical theory; and

(k) Point injection therapy (aquapuncture.)

(3) Side effects may include, but are not limited to, the following:

(a) Some pain following treatment in insertion area;

(b) Minor bruising;

(c) Infection;

(d) Needle sickness; and

(e) Broken needle.

(4) Patients with severe bleeding disorders or pace makers should inform practitioners prior to any treatment.

[Statutory Authority: RCW 43.70.040. 91-02-049 (Order 121), recodified as § 246-802-120, filed 12/27/90, effective 1/31/91. Statutory Authority: RCW 18.06.160. 87-06-050 (Order PM 641), § 308-180-240, filed 3/4/87.]

WAC 246-802-130 Application exhibits required. An applicant must submit:

(1) The application fee required under WAC 246-802-990;

(2) Verification of academic or educational study and training at a school or college which may include the following:

(a) Photostatic copy of diploma, certificate, or other certified documents and original copy of school transcript from a school or college evidencing completion of a program and a copy of the curriculum in the areas of study involved in the school or college forwarded directly from the issuing agency/organization; or

(b) Notarized affidavit or statement bearing the official school seal and signed by an officer of the school or training program certifying the applicant's satisfactory completion of the academic and clinical training and designating the subjects and hours; or

(c) Certified copies of licenses issued by the applicants jurisdiction which must be forwarded directly to the department of health from the issuing licensing and/or translation agency rather than the applicant.

(d) If the school no longer exists, an applicant may submit a sworn affidavit stating the name of the school and that it no longer exists. The applicant must also provide the school's address, dates of enrollment and curriculum completed, and other information and documents as requested by the department.

(3) Verification of clinical training. The applicant shall submit a verification of clinical training form. The form must be signed by an officer of the approved program and must state that the applicant completed a course of supervised clinical training. The verification form must include:

(a) The location(s) of the training site(s).

(b) The inclusive dates of training.

(c) A statement that the supervised clinical training meets the requirements of WAC 246-802-060.

(4) Certified verification of successful completion of:

(a) The national written examination;

(b) Practical examination of point location skills; and

(c) A clean needle technique course approved by the National Certification Commission for Acupuncture and Oriental Medicine (NCCAOM).

(5) If required by WAC 246-802-090(3), certified verification of a successful score of at least 550 on the test of English as a foreign language (TOEFL). The applicant shall have a copy of his/her official score records sent directly to the department from the testing service. The department may grant an exemption to this requirement if the department determines there is good cause.

[Statutory Authority: RCW 18.06.160 and 18.06.050. 05-13-188, § 246-802-130, filed 6/22/05, effective 7/23/05. Statutory Authority: RCW 43.70.040. 92-17-035 (Order 295B), § 246-802-130, filed 8/13/92, effective 9/13/92; 91-02-049 (Order 121), recodified as § 246-802-130, filed 12/27/90, effective 1/31/91. Statutory Authority: RCW 18.06.160. 90-12-114 (Order 052), § 308-180-250, filed 6/6/90, effective 7/7/90; 88-07-031 (Order PM 713), § 308-180-250, filed 3/9/88; 87-06-050 (Order PM 641), § 308-180-250, filed 3/4/87.]

WAC 246-802-140 Advertising. (1) A person certified under chapter 18.06 RCW shall use the title certified acupuncturist or C.A. following their name in all forms of advertising, professional literature and billings. A certified acupuncturist may not represent that he or she holds a degree from an acupuncture school other than that degree which appears on his or her application for certification which has been verified in accordance with the director's requirements, unless the additional degree has also been verified in accordance with WAC 308-180-140.

(2) A certified acupuncturist may not use the title "doctor," "Dr.," or "Ph.D." on any advertising or other printed material unless the nature of the degree is clearly stated.

(3) A certified acupuncturist shall not engage in false, deceptive, or misleading advertising including but not limited to the following:

(a) Advertising which misrepresents the potential of acupuncture.

(b) Advertising of any service, technique, or procedure that is outside the scope of the certified acupuncturist as provided in RCW 18.06.010.

[Statutory Authority: RCW 43.70.040. 91-02-049 (Order 121), recodified as § 246-802-140, filed 12/27/90, effective 1/31/91. Statutory Authority: RCW 18.06.160. 88-07-031 (Order PM 713), § 308-180-270, filed 3/9/88.]

WAC 246-802-160 General provisions. (1) "Unprofessional conduct" as used in this chapter shall mean the conduct described in RCW 18.130.180.

(2) "Hospital" means any health care institution licensed pursuant to chapter 70.41 RCW.

(3) "Nursing home" means any health care institution which comes under chapter 18.51 RCW.

(4) "Department" means the department of health, whose address is:

Department of Health
Professional Licensing Services
1300 S.E. Quince St.
P.O. Box 47868
Olympia, Washington 98504-7868

(5) "Acupuncturist" means a person certified under chapter 18.06 RCW.

(6) "Mentally or physically disabled acupuncturist" means an acupuncturist who is currently mentally incompetent or mentally ill as determined by a court, or who is unable to practice acupuncture with reasonable skill and safety to patients by reason of any mental or physical condition and who continues to practice while so impaired.

[Statutory Authority: RCW 43.70.040. 92-17-035 (Order 295B), § 246-802-160, filed 8/13/92, effective 9/13/92; 91-02-049 (Order 121), recodified as § 246-802-160, filed 12/27/90, effective 1/31/91. Statutory Authority: RCW 18.130.070. 89-14-092 (Order PM 842), § 308-180-290, filed 6/30/89.]

WAC 246-802-170 Mandatory reporting. (1) All reports required by this chapter shall be submitted to the department as soon as possible, but no later than twenty days after a determination is made.

(2) A report should contain the following information if known:

(a) The name, address, and telephone number of the person making the report.

(b) The name and address and telephone numbers of the acupuncturist being reported.

(c) The case number of any patient whose treatment is a subject of the report.

(d) A brief description or summary of the facts which gave rise to the issuance of the report, including dates of occurrences.

(e) If court action is involved, the name of the court in which the action is filed along with the date of filing and docket number.

(f) Any further information which would aid in the evaluation of the report.

(3) Mandatory reports shall be exempt from public inspection and copying to the extent permitted under RCW 42.17.310 or to the extent that public inspection or copying of the report or any portion of the report would invade or violate a person's right to privacy as set forth in RCW 42.17.255.

(4) A person is immune from civil liability, whether direct or derivative, for providing information to the department pursuant to RCW 18.130.070.

[Statutory Authority: RCW 43.70.040. 91-02-049 (Order 121), recodified as § 246-802-170, filed 12/27/90, effective 1/31/91. Statutory Authority: RCW 18.130.070. 89-14-092 (Order PM 842), § 308-180-300, filed 6/30/89.]

WAC 246-802-180 Health care institutions. The chief administrator or executive officer or their designee of any hospital or nursing home shall report to the department when any acupuncturist's services are terminated or are restricted based on a determination that the acupuncturist has either committed an act or acts which may constitute unprofessional conduct or that the acupuncturist may be mentally or physically disabled.

[Statutory Authority: RCW 43.70.040. 91-02-049 (Order 121), recodified as § 246-802-180, filed 12/27/90, effective 1/31/91. Statutory Authority: RCW 18.130.070. 89-14-092 (Order PM 842), § 308-180-310, filed 6/30/89.]

WAC 246-802-190 Acupuncture associations or societies. The president or chief executive officer of any acupuncture association or society within this state shall report to the department when the association or society determines that an acupuncturist has committed unprofessional conduct or that an acupuncturist may not be able to practice acupuncture with reasonable skill and safety to patients as the result of any mental or physical condition. The report required by this section shall be made without regard to whether the license holder appeals, accepts, or acts upon the determination made by the association or society. Notification of appeal shall be included.

[Statutory Authority: RCW 43.70.040. 91-02-049 (Order 121), recodified as § 246-802-190, filed 12/27/90, effective 1/31/91. Statutory Authority: RCW 18.130.070. 89-14-092 (Order PM 842), § 308-180-320, filed 6/30/89.]

WAC 246-802-200 Health care service contractors and disability insurance carriers. The executive officer of every health care service contractor and disability insurer, licensed under chapters 48.20, 48.21, 48.21A, and 48.44 RCW, operating in the state of Washington shall report to the department all final determinations that an acupuncturist has engaged in fraud in billing for services.

[Statutory Authority: RCW 43.70.040. 91-02-049 (Order 121), recodified as § 246-802-200, filed 12/27/90, effective 1/31/91. Statutory Authority: RCW 18.130.070. 89-14-092 (Order PM 842), § 308-180-330, filed 6/30/89.]

WAC 246-802-210 Professional liability carriers. Every institution or organization providing professional liability insurance directly or indirectly to acupuncturists shall send a complete report to the department of any malpractice settlement, award, or payment in excess of twenty thousand dollars as a result of a claim or action for damages alleged to have been caused by an insured acupuncturist's incompetency or negligence in the practice of acupuncture. Such institution or organization shall also report the award, settlement, or payment of three or more claims during a twelve-month period as a result of the acupuncturist's alleged incompetence or negligence in the practice of acupuncture.

[Statutory Authority: RCW 43.70.040. 91-02-049 (Order 121), recodified as § 246-802-210, filed 12/27/90, effective 1/31/91. Statutory Authority: RCW 18.130.070. 89-14-092 (Order PM 842), § 308-180-340, filed 6/30/89.]

WAC 246-802-220 Courts. The department requests the assistance of the clerk of trial courts within the state to report all professional malpractice judgments and all convic-

tions of licensed acupuncturists, other than minor traffic violations.

[Statutory Authority: RCW 43.70.040. 91-02-049 (Order 121), recodified as § 246-802-220, filed 12/27/90, effective 1/31/91. Statutory Authority: RCW 18.130.070. 89-14-092 (Order PM 842), § 308-180-350, filed 6/30/89.]

WAC 246-802-230 State and federal agencies. The department requests the assistance of executive officers of any state or federal program operating in the state of Washington, under which an acupuncturist is employed to provide patient care services, to report to the department whenever such an acupuncturist has been judged to have demonstrated his/her incompetency or negligence in the practice of acupuncture, or has otherwise committed unprofessional conduct. These requirements do not supersede any federal or state law.

[Statutory Authority: RCW 43.70.040. 91-02-049 (Order 121), recodified as § 246-802-230, filed 12/27/90, effective 1/31/91. Statutory Authority: RCW 18.130.070. 89-14-092 (Order PM 842), § 308-180-360, filed 6/30/89.]

WAC 246-802-240 Cooperation with investigation. (1) A certificant must comply with a request for records, documents, or explanation from an investigator who is acting on behalf of the secretary of the department of health by submitting the requested items within fourteen calendar days of receipt of the request by either the certificant or their attorney, whichever is first. If the certificant fails to comply with the request within fourteen calendar days, the investigator will contact that individual or their attorney by telephone or letter as a reminder.

(2) Investigators may extend the time for response if the request for extension does not exceed seven calendar days. Any other requests for extension of time may be granted by the director or the director's designee.

(3) If the certificant fails to comply with the request within three business days after receiving the reminder, a subpoena will be served to obtain the requested items. A statement of charges may be issued pursuant to RCW 18.130.180(8) for failure to cooperate. If there is sufficient evidence to support additional charges, those charges may be included in the statement of charges.

(4) If the certificant complies with the request after the issuance of the statement of charges, the secretary or the secretary's designee will decide if the charges will be prosecuted or settled. If the charges are to be settled the settlement proposal will be negotiated by the secretary's designee. Settlements are not considered final until the secretary signs the settlement agreement.

[Statutory Authority: RCW 43.70.040. 92-17-035 (Order 295B), § 246-802-240, filed 8/13/92, effective 9/13/92; 91-02-049 (Order 121), recodified as § 246-802-240, filed 12/27/90, effective 1/31/91. Statutory Authority: RCW 18.130.070. 89-14-092 (Order PM 842), § 308-180-370, filed 6/30/89.]

WAC 246-802-250 AIDS prevention and information education requirements. Applicants must complete seven clock hours of AIDS education as required in chapter 246-12 WAC, Part 8.

[Statutory Authority: RCW 43.70.280. 98-05-060, § 246-802-250, filed 2/13/98, effective 3/16/98. Statutory Authority: RCW 43.70.040. 92-17-035 (Order 295B), § 246-802-250, filed 8/13/92, effective 9/13/92; 91-02-049 (Order 121), recodified as § 246-802-250, filed 12/27/90, effective 1/31/91. Statutory Authority: RCW 70.24.270. 88-22-077 (Order PM 786), § 308-180-400, filed 11/2/88.]

WAC 246-802-990 Acupuncture fees and renewal cycle. (1) Licenses must be renewed every year on the practitioner's birthday as provided in chapter 246-12 WAC, Part 2. The secretary may require payment of renewal fees less than those established in this section if the current level of fees is likely to result in a surplus of funds. Surplus funds are those in excess of the amount necessary to pay for the costs of administering the program and to maintain a reasonable reserve. Notice of any adjustment in the required payment will be provided to practitioners. The adjustment in the required payment shall remain in place for the duration of a renewal cycle to assure practitioners an equal benefit from the adjustment.

(2) The following nonrefundable fees will be charged:

Title of Fee	Fee
License application	$50.00
License renewal	90.00
Inactive license renewal	50.00
Late renewal penalty	50.00
Expired license reissuance	50.00
Expired inactive license reissuance	50.00
Duplicate license	15.00
Certification of license	25.00
Acupuncture training program application	500.00
UW library access fee	9.00

[Statutory Authority: RCW 43.70.110, 43.70.250, 2008 c 329. 08-15-014, § 246-802-990, filed 7/7/08, effective 7/7/08. Statutory Authority: RCW 43.70.250, [43.70.]280 and 43.70.110. 05-12-012, § 246-802-990, filed 5/20/05, effective 7/1/05. Statutory Authority: RCW 43.70.250. 03-07-095, § 246-802-990, filed 3/19/03, effective 7/1/03; 99-08-101, § 246-802-990, filed 4/6/99, effective 7/1/99. Statutory Authority: RCW 43.70.280. 98-05-060, § 246-802-990, filed 2/13/98, effective 3/16/98. Statutory Authority: RCW 43.70.250, chapter 18.06 RCW. 95-01-038, § 246-802-990, filed 12/12/94, effective 1/1/95. Statutory Authority: RCW 43.70.040 and 43.70.250. 92-17-035 (Order 295B), § 246-802-990, filed 8/13/92, effective 9/13/92. Statutory Authority: RCW 43.70.250. 91-13-002 (Order 173), § 246-802-990, filed 6/6/91, effective 7/7/91. Statutory Authority: RCW 43.70.040. 91-02-049 (Order 121), recodified as § 246-802-990, filed 12/27/90, effective 1/31/91. Statutory Authority: RCW 43.70.250. 90-18-039 (Order 084), § 308-180-260, filed 8/29/90, effective 9/29/90; 90-04-094 (Order 029), § 308-180-260, filed 2/7/90, effective 3/10/90. Statutory Authority: RCW 43.24.086. 88-15-030 (Order PM 735), § 308-180-260, filed 7/13/88; 87-18-031 (Order PM 667), § 308-180-260, filed 8/27/87.]

Chapter 246-808 WAC

CHIROPRACTIC QUALITY ASSURANCE COMMISSION

WAC

CHIROPRACTORS

246-808-001 Purpose.
246-808-010 Definitions.
246-808-015 Adjudicative proceedings—Procedural rules for the commission.
246-808-020 Colleges—Policy.
246-808-030 Accreditation of colleges—Procedure.
246-808-040 Colleges—Educational standards required for accreditation.

LICENSURE - APPLICATION AND ELIGIBILITY REQUIREMENTS

246-808-101 Purpose.
246-808-105 Chiropractic licensure—Initial eligibility and application requirements.
246-808-115 Examinations.

246-808-130 Temporary permits—Issuance and duration.
246-808-135 Licensure by endorsement.
246-808-140 Thirty-day permit.
246-808-150 Commission approved continuing education.
246-808-155 Prior approval not required.
246-808-165 Exemptions.
246-808-180 Expired licenses—Requirements for reinstating a license.
246-808-181 Inactive credential.
246-808-190 Preceptor or direct supervisory doctor.

REGISTRATION OF CHIROPRACTIC X-RAY TECHNICIANS

246-808-201 Purpose.
246-808-215 Registration of chiropractic X-ray technicians.

STANDARDS OF CARE

246-808-301 Purpose.
246-808-320 Privileged communications.
246-808-330 Patient abandonment.
246-808-340 Consultation.
246-808-350 Unethical requests.
246-808-360 Patient welfare.
246-808-370 Patient disclosure.
246-808-380 Degree of skill.
246-808-390 Illegal practitioners.
246-808-400 Excessive professional charges.
246-808-505 Classification of chiropractic procedures and instrumentation.
246-808-510 Definitions.
246-808-520 Identification.
246-808-535 Delegation of services to auxiliary staff, regular senior students, and clinical postgraduate trainees.
246-808-540 Billing.
246-808-545 Improper billing practices.
246-808-550 Future care contracts prohibited.
246-808-560 Documentation of care.
246-808-565 Radiographic standards.
246-808-570 Pelvic or prostate examination prohibited.
246-808-575 Intravaginal adjustment restricted.
246-808-580 Acupuncture.
246-808-585 Clinically necessary X rays.
246-808-590 Sexual misconduct.
246-808-600 Prohibited publicity and advertising.
246-808-605 Honoring of publicity and advertisements.
246-808-610 Prohibited transactions.
246-808-615 Professional notices, letterheads, cards, and mailings.
246-808-620 Suggestion of need of chiropractic services.
246-808-625 Public testimonial advertising.
246-808-630 Full disclosure of cost of services.
246-808-640 Scope of practice—Revocation or suspension of license authorized for practice outside scope.
246-808-650 Records and X rays and withdrawal from practice—Maintenance and retention of patient records.
246-808-655 Duties of a chiropractor who retires or withdraws from practice.
246-808-660 Mandatory reporting.
246-808-670 Chiropractic associations or societies.
246-808-680 Insurance carriers.
246-808-685 Professional liability carriers.
246-808-690 Courts.
246-808-695 State and federal agencies.
246-808-700 Cooperation with investigation.
246-808-720 Commission conflict of interest.

SUBSTANCE ABUSE MONITORING

246-808-801 Purpose.
246-808-810 Definitions.
246-808-820 Approval of substance abuse monitoring programs.
246-808-830 Participation in approved substance abuse monitoring program.

CHIROPRACTIC FEES

246-808-990 Chiropractic fees and renewal cycle.

DISPOSITION OF SECTIONS FORMERLY CODIFIED IN THIS CHAPTER

246-808-106 AIDS prevention and information education requirements. [Statutory Authority: Chapter 18.25 RCW. 96-16-074, § 246-808-106, filed 8/6/96, effective 9/6/96.] Repealed by 98-05-060, filed 2/13/98, effective 3/16/98. Statutory Authority: RCW 43.70.280.

246-808-120 Chiropractic examination scores. [Statutory Authority: Chapter 18.25 RCW. 96-16-074, § 246-808-120, filed 8/6/96, effective 9/6/96.] Repealed by 00-17-180, filed 8/23/00, effective 9/23/00. Statutory Authority: RCW 18.25.0171 and 18.25.030.

246-808-160 License renewal—Affidavit of compliance with continuing education requirements. [Statutory Authority: Chapter 18.25 RCW. 96-16-074, § 246-808-160, filed 8/6/96, effective 9/6/96.] Repealed by 98-05-060, filed 2/13/98, effective 3/16/98. Statutory Authority: RCW 43.70.280.

246-808-170 Licensees residing and practicing out-of-state—Continuing education requirements. [Statutory Authority: Chapter 18.25 RCW. 96-16-074, § 246-808-170, filed 8/6/96, effective 9/6/96.] Repealed by 06-03-057, filed 1/11/06, effective 2/11/06. Statutory Authority: RCW 18.25.0171 and 18.25.070.

246-808-185 License renewal form. [Statutory Authority: Chapter 18.25 RCW. 96-16-074, § 246-808-185, filed 8/6/96, effective 9/6/96.] Repealed by 98-05-060, filed 2/13/98, effective 3/16/98. Statutory Authority: RCW 43.70.280.

246-808-410 Disparaging other practitioners. [Statutory Authority: Chapter 18.25 RCW. 96-16-074, § 246-808-410, filed 8/6/96, effective 9/6/96.] Repealed by 97-20-163, filed 10/1/97, effective 11/1/97. Statutory Authority: Chapter 18.25 RCW.

246-808-525 Health food store ownership. [Statutory Authority: Chapter 18.25 RCW. 96-16-074, § 246-808-525, filed 8/6/96, effective 9/6/96.] Repealed by 97-20-163, filed 10/1/97, effective 11/1/97. Statutory Authority: Chapter 18.25 RCW.

246-808-530 Vitamins, minerals and food supplements. [Statutory Authority: Chapter 18.25 RCW. 96-16-074, § 246-808-530, filed 8/6/96, effective 9/6/96.] Repealed by 97-20-163, filed 10/1/97, effective 11/1/97. Statutory Authority: Chapter 18.25 RCW.

246-808-710 Professional standards review organizations. [Statutory Authority: Chapter 18.25 RCW. 96-16-074, § 246-808-710, filed 8/6/96, effective 9/6/96.] Repealed by 97-20-163, filed 10/1/97, effective 11/1/97. Statutory Authority: Chapter 18.25 RCW.

CHIROPRACTORS

WAC 246-808-001 Purpose. The purpose of these rules is to further clarify and define chapter 18.25 RCW, Chiropractic.

[Statutory Authority: Chapter 18.25 RCW. 96-16-074, § 246-808-001, filed 8/6/96, effective 9/6/96.]

WAC 246-808-010 Definitions. The following terms are so defined for the purposes of this chapter:

"Acquired immunodeficiency syndrome" or **"AIDS"** means the clinical syndrome of HIV-related illness as defined by the board of health by rule.

"Approval" and **"accreditation"** are used interchangeably with reference to sanctioning of courses.

"College" means an institution whose curriculum provides education leading to the acquiring of a professional degree in chiropractic.

"Commission" means the chiropractic quality assurance commission, whose address is:

Department of Health
Health Profession Quality Assurance Division
Chiropractic Quality Assurance Commission
1112 SE Quince Street, PO Box 47867
Olympia, WA 98504-7867

"Office on AIDS" means that section within the department of health with jurisdiction over public health matters as defined in chapter 70.24 RCW.

[Statutory Authority: Chapter 18.25 RCW. 96-16-074, § 246-808-010, filed 8/6/96, effective 9/6/96.]

WAC 246-808-015 Adjudicative proceedings—Procedural rules for the commission. The commission adopts the model procedural rules for adjudicative proceedings as adopted by the department of health and contained in chapter 246-11 WAC, including subsequent amendments.

[Statutory Authority: Chapter 18.25 RCW. 96-16-074, § 246-808-015, filed 8/6/96, effective 9/6/96.]

WAC 246-808-020 Colleges—Policy. (1) In determining a college's eligibility for accreditation the commission may utilize, at its discretion, recognized chiropractic accrediting associations, recognized regional accrediting associations, and appropriate professional firms, agencies and individuals.

(2) Accreditation shall be primarily contingent upon a course of study which incorporates educationally sound practices and complies with the chiropractic educational requirements for the state of Washington.

(3) A college must have successfully graduated a class prior to making application for accreditation.

[Statutory Authority: Chapter 18.25 RCW. 96-16-074, § 246-808-020, filed 8/6/96, effective 9/6/96.]

WAC 246-808-030 Accreditation of colleges—Procedure. (1) Application and determination. A chiropractic college which desires to be accredited by the commission may secure an application form by sending a written request to the commission. The applicant shall complete the application form and submit it to the commission, along with any accompanying documents. Recent photographs of the college or the buildings in which the college is located shall be submitted with the application. Within one hundred twenty days after the receipt of the completed application, the commission shall consider the application, determine whether or not the college fulfills the requirements for accreditation, and notify the applicant, by mail, of the commission's determination. If the commission determines that the college is not approved for accreditation, the notice shall set forth the reasons for denial. The commission may withhold making a determination for a reasonable period of time for any justifiable cause upon giving notice to the applicant.

(2) Interrogatories. If the commission desires, it may request the applicant to answer specific inquiries. The granting or the denial of accreditation may be contingent upon the applicants' response to such inquiries.

(3) Oath. The answers to the inquiries in the application, and any other inquiries, shall be sworn to before a notary public.

(4) Inspection. If the commission desires, it may make the physical inspection of a particular college a condition for its being accredited. Reasonable costs for necessary on-campus visitation shall be paid by the applicant.

(5) Duration. A college which is once accredited shall continue to be accredited for so long as it fulfills the requirements set forth by the commission, or to be set forth by the commission. Upon receiving convincing evidence that a college has ceased to fulfill the requirements, the commission shall withdraw the accreditation of the college and shall inform the college of its reasons for doing so. A college shall inform the commission of changes, if any, in status which could reasonably jeopardize the college's qualifications for accreditation. Such changes shall include, but are not limited to, changes in curriculum, administration, faculty, classrooms and equipment.

(6) Revocation of accreditation. When the commission receives evidence that an accredited institution is not complying with commission criteria, it may, after meeting with institutional representatives, place the institution on probation. The institution shall be supplied with a written statement of charges setting forth the specifics of the noncompliance. The commission and chief administrative officer of the institution may agree on a mutually acceptable timetable and procedures for correction of the deficiencies or the commission may set the timetable. Should the institution not make the corrections recommended, or should further deficiencies develop during the probation, the commission may, after meeting with institutional representatives, revoke the accreditation of the college.

(7) Reinstatement of accredited status. Once the commission has revoked the accredited status of an institution, it must reapply by submitting either a new self-study or an updated self-study as may be required by the commission. The commission's usual procedure for applicants for initial accreditation and petitions for renewal is applied to petitioners for reinstatement. The visitation team report, hearing evidence and supporting data must show not only correction of the deficiencies which led to the disaccreditation but, in addition, compliance with the commission's criteria.

(8) Appeal. An appeal of a decision adverse to the college must be filed with the commission within thirty days of receipt of the commission's written decision. To be valid the appeal must contain a certified copy of a formal action authorizing the appeal, taken by a lawfully constituted meeting of the governing body of the institution. The appeal is based on a review of self-evaluation documents, catalog, visitor's report, institution's response to visitor's report, predecision hearing of the commission and commission decision. Alleged improvements effective subsequent to the evaluation which can be verified only through another on-site visit provide the basis for another evaluation, not for an appeal. An appeal does not include a dispute on a finding of fact unless appellant presents a valid reason showing the finding is clearly erroneous in view of the reliable, probative and substantial evidence on the whole record before the commission. The commission shall meet to consider the appeal at its earliest opportunity, and send a formal reply to the appealing college within thirty days of such meeting, unless it extends the time for good cause shown.

[Statutory Authority: Chapter 18.25 RCW. 96-16-074, § 246-808-030, filed 8/6/96, effective 9/6/96.]

WAC 246-808-040 Colleges—Educational standards required for accreditation. (1) Objectives - the college shall have clearly defined objectives.

(2) Administration and organization - the college shall:

(a) Be incorporated as a nonprofit institution and recognized as such by its state of domicile.

(b) Have full-time administrator.

(c) Have either a president or a dean of education with a doctor of chiropractic degree.

(d) Adopt policy of nondiscrimination as to national origin, race, religion, or sex.

(3) Educational offerings - the college shall:

(a) Provide educational offerings which prepare the student for successfully completing licensing examination and engaging in practice.

(b) Offer an educational program with a minimum of four thousand in-class hours provided over a four year academic term.

(c) Have available syllabi for all courses.

(d) Offer chiropractic curriculum as follows: Principles of chiropractic - two hundred in-class hours; adjustive technique - four hundred in-class hours; spinal roentgenology - one hundred seventy-five in-class hours; symptomatology and diagnosis - four hundred twenty-five in-class hours; clinic - six hundred twenty-five in-class hours.

(e) Offer at least one hundred twenty hours for the study of "principles of chiropractic" as the study of chiropractic philosophy, which shall be defined as the commonly held tenets which provide the basis for chiropractic as a separate and distinct form of practice.

The required one hundred twenty hours of philosophy instruction shall be clearly identified in the application and subsequent college catalogue as philosophy of chiropractic by course title and description. The remaining eighty required hours may include history of chiropractic, ethics, interprofessional relationships and other subjects specifically relating to the principles and practice of chiropractic.

(f) Not include mechanotherapy, physiotherapy, acupuncture, acupressure, or dietary therapy or any other therapy in computation of the qualifying four thousand classroom hours.

(g) Maintain a clinical program sufficient to fulfill the objectives of the college.

(4) Faculty - the college shall provide sufficient faculty to support the educational program of the college.

(5) Students - the college shall:

(a) Select students on a nondiscriminatory basis.

(b) Require that students maintain a 2.00 grade average and have no chiropractic subject grade less than 2.0.

(c) Require the student to complete a four-year academic program which meets all requirements of statute and rule for licensing to practice chiropractic in Washington state.

(6) Physical facilities and equipment - the college shall:

(a) Maintain a library of size and quality sufficient to serve the educational program.

(b) Maintain a basic plant that facilitates the educational program.

(c) Maintain clinic facilities that are of sufficient size and equipped appropriately to serve the student.

(7) Financial - the college shall:

(a) Have adequate present and anticipated income to sustain a sound educational program.

(b) Have well formulated plans for financing existing and projected education programs.

(c) Have an annual audit of financial records by a CPA.

(d) Make records available for review by the commission upon request.

(8) Self-evaluation - the college shall have a program of continuing self-evaluation and such evaluation must be made available upon request by the commission.

[Statutory Authority: Chapter 18.25 RCW. 96-16-074, § 246-808-040, filed 8/6/96, effective 9/6/96.]

LICENSURE - APPLICATION AND ELIGIBILITY REQUIREMENTS

WAC 246-808-101 Purpose. The purpose of WAC 246-808-101 through 246-808-190 is to establish guidelines on eligibility, and set forth the procedures for application to receive a license to practice chiropractic. By statute, the eligibility and application criterion are established in RCW 18.25.020 through 18.25.070.

[Statutory Authority: Chapter 18.25 RCW. 96-16-074, § 246-808-101, filed 8/6/96, effective 9/6/96.]

WAC 246-808-105 Chiropractic licensure—Initial eligibility and application requirements. To be eligible for Washington state chiropractic licensure, the applicant shall complete an application provided by the commission, and shall include written documentation to meet the eligibility criteria for licensure.

(1) Eligibility. An applicant shall provide proof that applicant:

(a) Graduated from an accredited chiropractic college approved by the commission and show satisfactory evidence of completion of a resident course of study of at least four thousand classroom hours of instruction.

(b) Successfully completed National Board of Chiropractic Examiners test parts I, II, III and IV.

(c) Completed at least one-half the requirements for a baccalaureate degree at an accredited and approved college or university if the applicant matriculated after January 1, 1975. Applicants who matriculated prior to January 1, 1975, must show proof of high school graduation or its equivalent.

(2) Application procedure. Each applicant shall submit:

(a) A completed official application including one recent photo.

(b) The application fee. (Refer to WAC 246-808-990 for fee schedule.)

(c) Official transcripts from prechiropractic schools showing successful completion of at least two years of liberal arts and sciences study.

(d) An official transcript and diploma certified by the registrar, from an approved chiropractic college.

(e) An official certificate of proficiency sent directly to the commission from the National Board of Chiropractic Examiners, parts I, II, III and IV.

(f) Verification of licensure status from all states where applicant has been issued a license to practice chiropractic. Verification is required whether license is active or inactive.

(g) Evidence of completion of four clock hours of AIDS education as required in chapter 246-12 WAC, Part 8.

[Statutory Authority: RCW 18.25.0171 and 18.25.030. 00-17-180, § 246-808-105, filed 8/23/00, effective 9/23/00. Statutory Authority: RCW 43.70.280. 98-05-060, § 246-808-105, filed 2/13/98, effective 3/16/98. Statutory Authority: Chapter 18.25 RCW. 96-16-074, § 246-808-105, filed 8/6/96, effective 9/6/96.]

WAC 246-808-115 Examinations. (1) In order to be eligible to take the commission administered examination, all applicants shall satisfactorily pass the National Board of Chiropractic Examiners test parts I, II, III and IV which covers the subjects set forth in RCW 18.25.030.

(2) All applicants shall pass the open book written jurisprudence examination.

(3) The minimum passing score on the open book written jurisprudence examination is 95 percent.

[Statutory Authority: RCW 18.25.0171 and 18.25.030. 00-17-180, § 246-808-115, filed 8/23/00, effective 9/23/00. Statutory Authority: Chapter 18.25 RCW. 96-16-074, § 246-808-115, filed 8/6/96, effective 9/6/96.]

WAC 246-808-130 Temporary permits—Issuance and duration. (1) An applicant may request a temporary practice permit by submitting to the commission:

(a) A completed application on forms provided by the department with the request for a temporary practice permit indicated;

(b) An application fee and a temporary practice permit fee as specified in WAC 246-808-990; and

(c) Written verification directly from all states in which the applicant has a license, attesting that the applicant has a license in good standing and is not subject to charges or disciplinary action for unprofessional conduct or impairment.

(2) The commission shall issue a one-time-only temporary practice permit unless the commission determines a basis for denial of the license or issuance of a conditional license.

(3) The temporary permit shall expire immediately upon:

(a) The issuance of a license by the commission;

(b) Initiation of an investigation of the applicant by the commission;

(c) Failure to pass the examinations given by the commission; or

(d) Three months, whichever occurs first.

An applicant who has failed the examination must apply for and take the next examination for which they are eligible.

[Statutory Authority: Chapter 18.25 RCW. 96-16-074, § 246-808-130, filed 8/6/96, effective 9/6/96.]

WAC 246-808-135 Licensure by endorsement. RCW 18.25.040 authorizes the commission to grant licensure for endorsement to individuals to practice chiropractic under the laws of any other state, territory of the United States, the District of Columbia, Puerto Rico, or province of Canada, if the commission determines an applicant has qualifications that are substantially equivalent to the requirements in this section.

An applicant may apply for licensure by endorsement by submitting to the commission:

(1) A completed application on forms provided by the department;

(2) A fee as specified in WAC 246-808-990; and

(3) Evidence, satisfactory to the commission that the applicant, at the time of application under this section:

(a) Is licensed to practice chiropractic in another jurisdiction including, but not limited to, another state, a territory of the United States, the District of Columbia, the Commonwealth of Puerto Rico or a province in Canada;

(b) Has credentials and qualifications that are substantially equivalent to Washington state's requirements for licensure by examination;

(c) Has been engaged in the full-time practice of chiropractic, or has taught general clinical chiropractic subjects at an accredited school of chiropractic;

(d) Has not been convicted of a crime, if the crime would be grounds for the denial, suspension, or revocation of a license to practice chiropractic in the state of Washington;

(e) Has a license to practice chiropractic that is not suspended, revoked, or otherwise conditioned or restricted, in any jurisdiction, which would be grounds for the denial, suspension or revocation of a license to practice chiropractic in the state of Washington; and

(f) Of passing an open book written jurisprudence examination with a minimum passing score of ninety-five percent.

[Statutory Authority: RCW 18.25.0171 and 18.25.040. 05-20-105, § 246-808-135, filed 10/5/05, effective 11/5/05. Statutory Authority: RCW 18.25.0171 and 18.25.030. 00-17-180, § 246-808-135, filed 8/23/00, effective 9/23/00. Statutory Authority: Chapter 18.25 RCW. 96-16-074, § 246-808-135, filed 8/6/96, effective 9/6/96.]

WAC 246-808-140 Thirty-day permit. A chiropractor practicing under authority of RCW 18.25.190(1) shall register with the commission by:

(1) Notifying the commission of the nature and dates of their practice in the state of Washington;

(2) Submitting a copy of their current, valid license in the other jurisdiction in which they are licensed; and

(3) Submitting a declaration, on forms provided by the commission, attesting to the possession of a current, valid license and not having had a license to practice chiropractic suspended, revoked, or conditioned in any jurisdiction in the preceding five years. No fee shall be charged to register under this section.

[Statutory Authority: Chapter 18.25 RCW. 96-16-074, § 246-808-140, filed 8/6/96, effective 9/6/96.]

WAC 246-808-150 Commission approved continuing education. (1) Chiropractors must complete twenty-five hours of continuing education per year under RCW 18.25.070 and chapter 246-12 WAC, Part 7.

(2) The commission approves the following subject material for continuing chiropractic education credit:

(a) Diagnosis and treatment of the spine or immediate articulations within the scope of practice;

(b) X-ray/diagnostic imaging;

(c) Adjustive technique;

(d) Detection of a subluxation;

(e) Physical examination;

(f) Hygiene;

(g) Symptomatology;

(h) Neurology;

(i) Pathology;

(j) Orthopedics;

(k) Patient/case management;

(l) Impairment within the scope of practice;

(m) CPR;

(n) Dietary and nutrition advice; and

(o) Chiropractic philosophy and business management (not to exceed a total of eight hours).

(3) Subject matter not approved for continuing education credit:

(a) Subject matter not directly relating to the chiropractic clinical scope of practice; and

(b) Conduct prohibited by Washington state statutes or rules governing chiropractic practice.

(4) A chiropractor may earn a maximum of twelve hours for:

(a) Completing a multimedia chiropractic education program, which includes, but is not limited to, the internet, and video presentations.

(b) Serving as teachers or lecturers in continuing education programs. A chiropractor may receive credit on the same basis as the doctors attending the program.

(5) The individual or organization responsible for a continuing education presentation must provide documentation of attendance to participants, including course content and number of hours.

(6) Chiropractors in active status who reside and practice outside Washington must meet all the requirements of this section.

[Statutory Authority: RCW 18.25.0171 and 18.25.070. 06-03-057, § 246-808-150, filed 1/11/06, effective 2/11/06. Statutory Authority: RCW 43.70.280. 98-05-060, § 246-808-150, filed 2/13/98, effective 3/16/98. Statutory Authority: Chapter 18.25 RCW. 96-16-074, § 246-808-150, filed 8/6/96, effective 9/6/96.]

WAC 246-808-155 Prior approval not required. (1) It shall be unnecessary for a chiropractor to inquire into the prior approval of any continuing chiropractic education. The commission shall accept any continuing chiropractic education that falls within these regulations and relies upon each individual chiropractor's integrity in complying with this requirement.

(2) Continuing chiropractic education program sponsors need not apply for, nor expect to receive, prior commission approval for a formal continuing chiropractic education program. The number of creditable hours may be determined by counting the contact hours of instruction and rounding to the nearest quarter hour. The commission relies upon the integrity of program sponsors to present continuing chiropractic education that constitutes a meritorious learning experience and complies with RCW 18.25.070.

[Statutory Authority: RCW 43.70.280. 98-05-060, § 246-808-155, filed 2/13/98, effective 3/16/98. Statutory Authority: Chapter 18.25 RCW. 96-16-074, § 246-808-155, filed 8/6/96, effective 9/6/96.]

WAC 246-808-165 Exemptions. The commission may grant exemptions or time extensions on an individual basis, if a licensee fails to meet continuing education requirements due to illness, retirement, or other extenuating circumstances.

[Statutory Authority: RCW 18.25.0171 and RCW 18.25.070. 06-03-057, § 246-808-165, filed 1/11/06, effective 2/11/06. Statutory Authority: RCW 43.70.280. 98-05-060, § 246-808-165, filed 2/13/98, effective 3/16/98. Statutory Authority: Chapter 18.25 RCW. 96-16-074, § 246-808-165, filed 8/6/96, effective 9/6/96.]

WAC 246-808-180 Expired licenses—Requirements for reinstating a license. (1) If the license has expired for three years or less, the practitioner must meet the requirements of chapter 246-12 WAC, Part 2.

(2) If the license has expired for more than three years and the practitioner can submit proof of continuing education, the practitioner must:

(a) Successfully complete the jurisprudence examination given by the department;

(b) Meet the requirements of chapter 246-12 WAC, Part 2.

(3) If the license has expired for more than three years and the practitioner cannot submit proof of continuing education courses during the time the license was expired, the practitioner must:

(a) Successfully pass the examination as provided in RCW 18.25.040 and 18.25.070(2);

(b) Meet the requirements of chapter 246-12 WAC, Part 2.

[Statutory Authority: RCW 43.70.280. 98-05-060, § 246-808-180, filed 2/13/98, effective 3/16/98. Statutory Authority: Chapter 18.25 RCW. 96-16-074, § 246-808-180, filed 8/6/96, effective 9/6/96.]

WAC 246-808-181 Inactive credential. (1) A chiropractor may obtain an inactive credential. Refer to the requirements of chapter 246-12 WAC, Part 4.

(2) To return to active status the practitioner must:

(a) Take and pass the jurisprudence examination given by the department; and

(b) Meet the requirements of chapter 246-12 WAC, Part 4.

[Statutory Authority: RCW 43.70.280. 98-05-060, § 246-808-181, filed 2/13/98, effective 3/16/98.]

WAC 246-808-190 Preceptor or direct supervisory doctor. A preceptor is a doctor of chiropractic who is approved by the commission to provide direct supervision to, clinical postgraduate trainee, or regular senior student, as set forth in RCW 18.25.190. The commission maintains a list of approved preceptors.

(1) An approved preceptor shall:

(a) Provide direct supervision and control;

(b) Be on the premises any time the clinical postgraduate trainee, or regular senior student, treats patients in accordance with WAC 246-808-535; and

(c) Meet with the patient prior to commencement of chiropractic care, and inform the patient in writing of the unlicensed status of the person from whom care is being received.

(2) To apply for commission approval to function as a preceptor, a doctor of chiropractic shall submit to the commission:

(a) Proof of licensure as a Washington chiropractic doctor for the preceding five years, during which time the license has not been suspended, revoked, or otherwise conditioned or restricted;

(b) A completed official application;

(c) Verification of approval to participate in the program by an approved chiropractic college;

(d) Evidence of malpractice insurance for the clinical postgraduate trainee, the preceptor applicant, the regular senior student; and

(e) A fee as specified in WAC 246-808-990.

[Statutory Authority: RCW 18.25.0171 and 18.25.190. 06-02-088, § 246-808-190, filed 1/4/06, effective 2/4/06. Statutory Authority: Chapter 18.25 RCW. 96-16-074, § 246-808-190, filed 8/6/96, effective 9/6/96.]

REGISTRATION OF CHIROPRACTIC X-RAY TECHNICIANS

WAC 246-808-201 Purpose. The purpose of WAC 246-808-201 through 246-808-215 is to establish eligibility criterion for registration of chiropractic X-ray technicians as allowed under RCW 18.25.180.

[Statutory Authority: Chapter 18.25 RCW. 96-16-074, § 246-808-201, filed 8/6/96, effective 9/6/96.]

WAC 246-808-215 Registration of chiropractic X-ray technicians. (1) Chiropractic doctors shall employ only commission registered technicians to operate X-ray equipment.

(2) Application. An X-ray technician may apply for registration by submitting to the commission:

(a) Proof of satisfactory completion of a course of classroom instruction of at least forty-eight hours which has been approved by the commission in accordance with subsection (4) of this section; and

(b) Verification of passing a proficiency examination in radiologic technology, which is approved by the commission. A passing grade shall be seventy-five percent or a standardized score approved by the commission. If the applicant fails the initial examination, the applicant may reapply to take the examination one additional time without additional classroom instruction. If the applicant fails a second examination, the applicant shall complete an additional sixteen hours of classroom instruction prior to reapplying for a third examination.

(3) Exceptions. An applicant who holds a current active registration, license, or certification from a national certifying agency or other governmental licensing agency whose standards for registration, licensure or certification are equal to or exceed the standards under these rules may register without examination.

(4) Course approval. An individual may request commission approval of a course of classroom instruction for X-ray technicians by submitting the following information to the commission no later than ninety days prior to the first day of instruction:

(a) An outline of the course of instruction, which shall include:

(i) Physics and equipment;

(ii) Principles of radiographic exposure;

(iii) Radiation protection;

(iv) Anatomy and physiology; and

(v) Radiographic positioning and procedures.

(b) Proficiency examination;

(c) Verification that the course instructor has on-campus or postgraduate faculty status in the field of radiology with a commission approved chiropractic college; and

(d) Any other information deemed necessary by the commission to make a determination.

(5) Continuing education. Registered chiropractic X-ray technicians must demonstrate completion of six hours of continuing education as provided in chapter 246-12 WAC, Part 7.

The commission approves continuing education of subject matter listed in subsection (4) of this section. Prior approval of continuing education programs is not required by the commission.

[Statutory Authority: RCW 43.70.280. 98-05-060, § 246-808-215, filed 2/13/98, effective 3/16/98. Statutory Authority: Chapter 18.25 RCW. 96-16-074, § 246-808-215, filed 8/6/96, effective 9/6/96.]

STANDARDS OF CARE

WAC 246-808-301 Purpose. The purpose of WAC 246-808-301 through 246-808-720 is to provide standards of care to guide the practitioner of chiropractic in the conduct of their practice.

[Statutory Authority: Chapter 18.25 RCW. 96-16-074, § 246-808-301, filed 8/6/96, effective 9/6/96.]

WAC 246-808-320 Privileged communications. A chiropractor shall not, without the consent of the patient, reveal any information acquired in attending such patient, which was necessary to enable the chiropractor to treat the patient. This shall not apply to the release of information in an official proceeding where the release of information may be compelled by law.

[Statutory Authority: Chapter 18.25 RCW. 96-16-074, § 246-808-320, filed 8/6/96, effective 9/6/96.]

WAC 246-808-330 Patient abandonment. The chiropractor shall always be free to accept or reject a particular patient, bearing in mind that whenever possible a chiropractor shall respond to any reasonable request for his/her services in the interest of public health and welfare.

[Statutory Authority: Chapter 18.25 RCW. 96-16-074, § 246-808-330, filed 8/6/96, effective 9/6/96.]

WAC 246-808-340 Consultation. In difficult or protracted cases consultations are advisable, and the chiropractor shall be ready to act upon any desire the patient may express for a consultation, even though the chiropractor may not personally feel the need for it.

[Statutory Authority: Chapter 18.25 RCW. 96-16-074, § 246-808-340, filed 8/6/96, effective 9/6/96.]

WAC 246-808-350 Unethical requests. A chiropractor shall not assist in any immoral practice such as aiding in the pretense of disability in order to avoid jury or military duty, or the concealment of physical disability in order to secure favorable insurance.

[Statutory Authority: Chapter 18.25 RCW. 96-16-074, § 246-808-350, filed 8/6/96, effective 9/6/96.]

WAC 246-808-360 Patient welfare. The health and welfare of the patient shall always be paramount, and expectation of remuneration or lack thereof shall not in any way affect the quality of service rendered the indigent patient.

[Statutory Authority: Chapter 18.25 RCW. 96-16-074, § 246-808-360, filed 8/6/96, effective 9/6/96.]

WAC 246-808-370 Patient disclosure. Absolute honesty shall characterize all transactions with patients. The chiropractor shall neither intentionally exaggerate nor minimize the gravity of the patient's condition, nor offer any false hope or prognosis.

[Statutory Authority: Chapter 18.25 RCW. 96-16-074, § 246-808-370, filed 8/6/96, effective 9/6/96.]

WAC 246-808-380 Degree of skill. The chiropractor owes their patient(s) the highest degree of skill and care of which they are capable. To this end the chiropractor shall endeavor to keep abreast of new developments in chiropractic and shall constantly endeavor to improve their knowledge and skill in the science and art or philosophy of chiropractic, as defined in chapter 18.25 RCW.

[Statutory Authority: Chapter 18.25 RCW. 96-16-074, § 246-808-380, filed 8/6/96, effective 9/6/96.]

WAC 246-808-390 Illegal practitioners. Chiropractors shall safeguard their profession by exposing those who might attempt to practice without proper credentials, and by reporting violations of the laws regulating chiropractic to the proper authorities.

[Statutory Authority: Chapter 18.25 RCW. 96-16-074, § 246-808-390, filed 8/6/96, effective 9/6/96.]

WAC 246-808-400 Excessive professional charges. (1) A chiropractor shall not enter into an agreement for, charge, or collect an illegal or clearly excessive fee.

(2) A fee is clearly excessive when, after a review of the facts, a chiropractor would be left with a definite and firm conviction that the fee is in excess of a reasonable fee. Factors to be considered as guides in determining the reasonableness of a fee include the following:

(a) The time, effort and skill required requisite to perform the chiropractic service properly;

(b) The fee customarily charged in the locality for similar chiropractic services;

(c) The experience, reputation, and ability of the chiropractor performing the services.

(3) A chiropractor shall not prescribe nor perform any services which are not reasonably necessary in consideration of the patient's condition and shall furnish an explanation of charges for chiropractic services upon request of the commission.

[Statutory Authority: Chapter 18.25 RCW. 96-16-074, § 246-808-400, filed 8/6/96, effective 9/6/96.]

WAC 246-808-505 Classification of chiropractic procedures and instrumentation. (1) Procedures, instruments for treatment and/or diagnostic evaluation used by a doctor of chiropractic shall be classified by the commission as follows:

(a) **"Approved":** A procedure or instrument which is taught by a commission approved chiropractic college for patient clinical application and not for research or experimental purposes and is allowable by statute. All factors listed under subsection (4) of this section shall be considered before a procedure or instrument is placed in the approved classification.

(b) **"Nonapproved or experimental":** Any procedure or instrument that does not meet with commission approval. A procedure or instrument in this classification shall pass further testing in the laboratory before it can be used on the public. These may be defined by previous declaratory rules or rules and regulations.

(c) **"Research or investigational":** A procedure or instrumentation that is not approved, but may have a positive benefit in the diagnosis or care of a patient's condition. No billing is allowed for procedures or instruments used under this classification.

(2) The commission shall maintain a classified list of chiropractic procedures and instrumentation. The list shall be made available upon request.

(3) A doctor who intends to use a new procedure or instrument in practice shall notify the commission to determine the classification of the procedure or instrument. If the procedure or instrument is not classified or if new information on a previously classified procedure or instrument is available the doctor shall:

(a) Provide the commission with supporting documentation concerning the use of such a procedure or instrumentation;

(b) Demonstrate sufficient additional training or study for the doctor and utilizing staff to properly use the procedure or instrumentation.

(4) The commission may use the following factors to determine the classification of the procedure or instrumentation, and shall notify the doctor of such classification:

(a) The new procedure or instrument is taught at an approved chiropractic college.

(b) There is a scientific basis for the new procedure or instrument.

(c) The procedure or instrument has a direct and positive relationship to chiropractic care.

(d) Comparison of potential risk to benefit to the patient.

(e) Any other factors the commission may wish to consider.

[Statutory Authority: Chapter 18.25 RCW. 96-16-074, § 246-808-505, filed 8/6/96, effective 9/6/96.]

WAC 246-808-510 Definitions. "Auxiliary services" means those services, excluding those practices which are restricted to licensed chiropractors, which may be needed for the support of chiropractic care.

"Auxiliary staff" means personnel, except regular senior students and clinical postgraduate trainees, who receive ongoing on-the-job training and who work for or at the direction of a licensed doctor of chiropractic.

"Chiropractor," "doctor of chiropractic," means a person licensed under chapter 18.25 RCW.

"Clinical postgraduate trainee" means a graduate doctor of chiropractic serving a period of postgraduate chiropractic training in a program of clinical chiropractic training sponsored by an accredited school of chiropractic approved by this state. The clinical postgraduate trainee works under the direct supervision and control of a commission approved preceptor as described in WAC 246-808-190 and 246-808-535. Clinical postgraduate trainees who have had their chiropractic license suspended, revoked, or otherwise conditioned or restricted under authority of any competent jurisdiction shall not perform any delegated tasks listed in WAC 246-808-535(4).

"Direct supervision" and **"direct supervision and control"** means a licensed chiropractor is on the premises and immediately available, and has examined the patient prior to delegating duties to auxiliary staff, regular senior students, or clinical postgraduate trainees.

"Mentally or physically disabled chiropractor" means a chiropractor who has either been determined by a court to be mentally incompetent or mentally ill or who is unable to practice chiropractic with reasonable skill and safety to patients by reason of any mental or physical condition.

"Regular senior student" means a student in his or her last term (quarter or semester) at an accredited school approved by the commission who has met all clinical and graduation requirements except clinical training hours.

"Unprofessional conduct" as used in these regulations means the conduct described in RCW 18.130.180 and 18.25.-112.

[Statutory Authority: RCW 18.25.0171. 06-09-033, § 246-808-510, filed 4/12/06, effective 5/13/06. Statutory Authority: Chapter 18.25 RCW. 96-16-074, § 246-808-510, filed 8/6/96, effective 9/6/96.]

WAC 246-808-520 Identification. (1) A chiropractor must clearly identify oneself as a chiropractor on his/her office signs.

(2) All identification of chiropractic practice shall be presented in a dignified manner and shall not be sensational or misleading.

[Statutory Authority: Chapter 18.25 RCW. 96-16-074, § 246-808-520, filed 8/6/96, effective 9/6/96.]

WAC 246-808-535 Delegation of services to auxiliary staff, regular senior students, and clinical postgraduate trainees. (1) A licensed chiropractor may delegate certain services to auxiliary staff, regular senior students, and clinical postgraduate trainees, if these services are performed under the licensed chiropractor's direct supervision and control. The supervising chiropractor shall be responsible for determining that auxiliary staff, regular senior students, and clinical postgraduate trainees are competent to perform the delegated services. The licensed supervising chiropractor must render adequate supervision so that the patient's health and safety is not at risk.

(2) Auxiliary staff shall not perform the following services:

(a) Detection of subluxation;

(b) Adjustment or manipulation of the articulations of the body;

(c) Interpretation or analysis of radiographs;

(d) Determining the necessity for chiropractic care;

(e) Orthopedic or neurological examinations.

(3) Regular senior students may perform the following under the direct supervision and control of an approved preceptor:

(a) Detection of subluxation;

(b) Expose, interpret or analyze radiographs;

(c) Determine the necessity for chiropractic care;

(d) Orthopedic or neurological examinations.

(4) Clinical postgraduate trainees may perform the following under the direct supervision and control of an approved preceptor:

(a) Detection of subluxation;

(b) Adjustment or manipulation of the articulations of the body;

(c) Expose, interpret or analyze radiographs;

(d) Determine the necessity for chiropractic care;

(e) Orthopedic or neurological examinations.

(5) Auxiliary staff, regular senior students, and clinical postgraduate trainees may perform the following auxiliary services: Preliminary patient history, height, weight, temperature, blood pressure, pulse rate, gross postural observation, active spinal range of motion utilizing a generally accepted measuring device, and oversight of patients during approved therapeutic procedures, rehabilitation exercises or use of therapeutic or rehabilitation equipment as incident to chiropractic services.

[Statutory Authority: RCW 18.25.0171 and 18.25.190. 06-02-088, § 246-808-535, filed 1/4/06, effective 2/4/06. Statutory Authority: Chapter 18.25 RCW. 96-16-074, § 246-808-535, filed 8/6/96, effective 9/6/96.]

WAC 246-808-540 Billing. A doctor of chiropractic may bill for all provided services that are allowable under chapter 18.25 RCW and the rules adopted pursuant to the foregoing statute. The doctor shall utilize codes and/or descriptions of services that accurately describe the professional services rendered.

[Statutory Authority: Chapter 18.25 RCW. 96-16-074, § 246-808-540, filed 8/6/96, effective 9/6/96.]

WAC 246-808-545 Improper billing practices. The following acts shall constitute grounds for which disciplinary action may be taken:

(1) Rebating or offering to rebate to an insured any payment to the licensee by the third-party payor of the insured for services or treatments rendered under the insured's policy.

(2) Submitting to any third-party payor a claim for a service or treatment at a greater or an inflated fee or charge than the usual fee the licensee charges for that service or treatment when rendered without third-party reimbursement.

[Statutory Authority: Chapter 18.25 RCW. 96-16-074, § 246-808-545, filed 8/6/96, effective 9/6/96.]

WAC 246-808-550 Future care contracts prohibited. It shall be considered unprofessional conduct for any chiropractor to enter into a contract which would obligate a patient to pay for care to be rendered in the future, unless the contract provides that the patient is entitled to a complete refund for any care not received.

[Statutory Authority: Chapter 18.25 RCW. 96-16-074, § 246-808-550, filed 8/6/96, effective 9/6/96.]

WAC 246-808-560 Documentation of care. (1) The recordkeeping procedures of a chiropractor shall be adequate to provide documentation of the necessity and rationale for examination, diagnostic/analytical procedures, and chiropractic services. The required documentation shall include, but not necessarily be limited to, the patient's history and/or subjective complaints; examination findings and/or objective findings; and a record of all chiropractic services performed.

(2) Chiropractic examinations shall be documented by specifying subjective complaints, objective findings, an assessment or appraisal of the patient's condition and the plan

for care. Daily chart notes may be brief notations recorded in the patient's chart file between examinations. These notations shall indicate any changes in the care or progress of the patient and the chiropractic, diagnostic, or analytical services performed or ordered. Detailed entries need not be documented on every visit as long as examinations are performed at reasonable intervals and those examinations are documented as specified in this section.

(3) If a code is utilized by the doctor in connection with recordkeeping, a code legend shall be included in the records.

[Statutory Authority: Chapter 18.25 RCW. 96-16-074, § 246-808-560, filed 8/6/96, effective 9/6/96.]

WAC 246-808-565 Radiographic standards. The following requirements for chiropractic X ray have been established because of concerns about over radiation and unnecessary X-ray exposure.

(1) The following shall appear on the films:

(a) Patient's name and age;

(b) Doctor's name, facility name, and address;

(c) Date of study;

(d) Left or right marker;

(e) Other markers as indicated;

(f) Adequate collimation;

(g) Gonad shielding, where applicable.

(2) Minimum of A/P and lateral views are necessary for any regional study unless clinically justified.

(3) As clinical evidence indicates, it may be advisable to produce multiple projections where there is an indication of possible fracture, significant pathology, congenital defects, or when an individual study is insufficient to make a comprehensive diagnosis/analysis.

(4) Each film shall be of adequate density, contrast, and definition, and no artifacts shall be present.

(5) The subjective complaints, if any, and the objective findings substantiating the repeat radiographic study must be documented in the patient record.

(6) These rules are intended to complement and not supersede those rules adopted by the radiation control agency set forth in chapter 246-225 WAC, Radiation protection—X rays in the healing arts.

[Statutory Authority: Chapter 18.25 RCW. 96-16-074, § 246-808-565, filed 8/6/96, effective 9/6/96.]

WAC 246-808-570 Pelvic or prostate examination prohibited. The physical examination to determine the necessity for chiropractic care does not include vaginal (pelvic) examination or prostate examination. Chiropractors are prohibited from performing such examination and from directing any agent or employee to perform such examination.

[Statutory Authority: Chapter 18.25 RCW. 96-16-074, § 246-808-570, filed 8/6/96, effective 9/6/96.]

WAC 246-808-575 Intravaginal adjustment restricted. It shall be considered unprofessional conduct for a chiropractor to perform an adjustment of the coccyx through the vagina unless the following conditions are met:

(1) The coccyx cannot be adjusted rectally or the patient is offered and declines the option of the rectal technique;

(2) The coccyx adjustment is performed with the use of a disposable finger cot or rubber glove; and

(3) A female attendant is present at all times the patient is examined and the coccyx adjustment is being performed.

[Statutory Authority: Chapter 18.25 RCW. 96-16-074, § 246-808-575, filed 8/6/96, effective 9/6/96.]

WAC 246-808-580 Acupuncture. No chiropractor shall:

(1) Employ the use of needles in the treatment of a patient; or

(2) Hold himself or herself out as practicing acupuncture in any form: This prohibition shall not restrict a chiropractor who is also a certified acupuncturist pursuant to chapter 18.06 RCW from practicing acupuncture, provided that the chiropractor differentiates chiropractic care from acupuncture care at all times as is required by RCW 18.25.112.

[Statutory Authority: Chapter 18.25 RCW. 96-16-074, § 246-808-580, filed 8/6/96, effective 9/6/96.]

WAC 246-808-585 Clinically necessary X rays. All offers of free X rays shall be accompanied by a disclosure statement that X rays shall only be taken if clinically necessary in order to avoid unnecessary radiation exposure.

[Statutory Authority: Chapter 18.25 RCW. 96-16-074, § 246-808-585, filed 8/6/96, effective 9/6/96.]

WAC 246-808-590 Sexual misconduct. (1) The chiropractor shall never engage in sexual contact or sexual activity with current clients.

(2) The chiropractor shall never engage in sexual contact or sexual activity with former clients if such contact or activity involves the abuse of the chiropractor-client relationship. Factors which the commission may consider in evaluating if the chiropractor-client relationship has been abusive include, but are not limited to:

(a) The amount of time that has passed since therapy terminated;

(b) The nature and duration of the therapy;

(c) The circumstances of cessation or termination;

(d) The former client's personal history;

(e) The former client's current mental status;

(f) The likelihood of adverse impact on the former client and others; and

(g) Any statements or actions made by the chiropractor during the course of treatment suggesting or inviting the possibility of a post-termination sexual or romantic relationship with the former client.

(3) The chiropractor shall never engage in sexually harassing or demeaning behavior with current or former clients.

[Statutory Authority: Chapter 18.25 RCW. 96-16-074, § 246-808-590, filed 8/6/96, effective 9/6/96.]

WAC 246-808-600 Prohibited publicity and advertising. (1) A chiropractor shall not, on behalf of himself/herself, his/her partner, associate or any other chiropractor affiliated with his/her office or clinic, use or allow to be used, any form of public communications or advertising which is false, fraudulent, deceptive or misleading, including, but not lim-

ited to, such advertising which takes any of the following forms which are prohibited:

(a) Advertising which guarantees any result or cure;

(b) Advertising which makes claims of professional superiority;

(c) Advertising which fails to differentiate chiropractic care from all other methods of healing;

(d) Advertising for a service outside the practice of chiropractic as permitted in Washington.

(2) A chiropractor shall, upon request made by the commission, provide the commission with substantiation of the truth and accuracy of any and all claims made in their advertisements.

(3) Advertising is prohibited which offers gratuitous goods or services or discounts in connection with chiropractic services, unless the chiropractor provides a disclosure statement to be signed by the patient which explains:

(a) When there shall be a charge for goods and services;

(b) When the free services have been completed and that any additional services the patient requests are subject to charge; or

(c) When the discount has been exhausted and any additional services shall be subject to full charge: This subsection shall not be construed to relate to the negotiation of fee between chiropractors and patients or to prohibit the rendering of chiropractic services for which no fee is charged.

[Statutory Authority: Chapter 18.25 RCW. 96-16-074, § 246-808-600, filed 8/6/96, effective 9/6/96.]

WAC 246-808-605 Honoring of publicity and advertisements. (1) If a chiropractor advertises a fee for a service, the chiropractor must render that service for no more than the fee advertised.

(2) Unless otherwise specified in the advertisement, if a chiropractor publishes any fee information authorized under chapter 246-808 WAC, the chiropractor shall be bound by any representation made therein for the periods specified in the following categories:

(a) If in a publication which is published more frequently than one time per month, for a period of not less than thirty days after such publication.

(b) If in a publication which is published once a month or less frequently, until the publication of the succeeding issue.

(c) If in a publication which has no fixed date for publication of the succeeding issue, for a reasonable period of time after publication, but in no event less than one year.

[Statutory Authority: Chapter 18.25 RCW. 96-16-074, § 246-808-605, filed 8/6/96, effective 9/6/96.]

WAC 246-808-610 Prohibited transactions. A chiropractor shall not compensate or give anything of value to representatives of the press, radio, television or other communication media in anticipation of or in return for professional publicity of any individual chiropractor in a news item.

[Statutory Authority: Chapter 18.25 RCW. 96-16-074, § 246-808-610, filed 8/6/96, effective 9/6/96.]

WAC 246-808-615 Professional notices, letterheads, cards, and mailings. In his/her use of professional notices, letterheads, cards, and mailings, a chiropractor is subject to the same regulations of chapter 246-808 WAC which apply to his/her use of other print media.

[Statutory Authority: Chapter 18.25 RCW. 96-16-074, § 246-808-615, filed 8/6/96, effective 9/6/96.]

WAC 246-808-620 Suggestion of need of chiropractic services. A chiropractor who has given in-person, unsolicited advice to a lay person that he/she should obtain chiropractic care shall not accept employment resulting from that advice except that:

(1) A chiropractor may accept employment by a close friend, relative, former patient (if the advice is germane to the former treatment), or one whom the chiropractor reasonably believes to be a patient; and

(2) Without affecting his/her right to accept employment, a chiropractor may speak publicly or write for publication on chiropractic topics so long as he/she does not emphasize his/her own professional experience or reputation and does not undertake to give individual advice.

[Statutory Authority: Chapter 18.25 RCW. 96-16-074, § 246-808-620, filed 8/6/96, effective 9/6/96.]

WAC 246-808-625 Public testimonial advertising. (1) Public testimonial advertising includes the use of a statement testifying as to a chiropractor's qualifications, abilities and character, or to the value of chiropractic services.

(2) The use of testimonial advertising shall not be considered false or misleading if the following guidelines are met:

(a) Testimonials must relate to patient care provided within the immediately preceding five-year period.

(b) The testimonial shall be documented by a notarized statement of the patient, a copy of which is kept by both the chiropractor and the patient.

(c) The testimonial must be consistent with the history of the patient's care, including office records, examination reports and X rays.

(d) Testimonials shall not:

(i) Be exaggerated or misrepresented;

(ii) State that a technique or doctor is superior;

(iii) Claim specific cures;

(iv) Compare one chiropractor to another;

(v) Include a named diagnosis.

[Statutory Authority: Chapter 18.25 RCW. 96-16-074, § 246-808-625, filed 8/6/96, effective 9/6/96.]

WAC 246-808-630 Full disclosure of cost of services. (1) This rule shall apply to all representations made in public advertising regarding the provision of chiropractic services, including X rays or chiropractic examinations, on a free basis or at a reduced cost. This rule shall also apply to all billings or other written or oral communications regarding charges for chiropractic services whether made to patients, third-party health care payors, or to any other person, firm, or governmental agency.

(2) When a chiropractic service is represented in public advertising as available without cost, or at a reduced cost, that service must be made available to everyone who wishes to take advantage of the offer on an equal basis. No charge may

be made to any individual or third-party health care payor for any services which have been provided on a free basis.

(3) All billings to third-party payors for patients who are also being treated for an unrelated condition must fully disclose the additional treatment being provided and the charges for that treatment.

(4) Billings to patients or to third-party health care payors shall accurately reflect the actual charge to the patient, including any discounts, reduced fees, or waiver of copayment.

(5) Because of the potential element of fraud being present, advertising full or partial forgiveness of coinsurance shall be prohibited unless the insurance company is given accurate and complete information relating to the actual charge to the patient and that coinsurance has been fully or partially waived.

[Statutory Authority: Chapter 18.25 RCW. 96-16-074, § 246-808-630, filed 8/6/96, effective 9/6/96.]

WAC 246-808-640 Scope of practice—Revocation or suspension of license authorized for practice outside scope. (1) The chiropractic quality assurance commission finds that over the past few years there has been an increasing number of persons licensed as chiropractors who have been practicing other healing arts while holding themselves out to the public as chiropractors to the detriment of the public health and welfare of the state of Washington and contrary to the legislative directive contained in RCW 18.25.002(4). The commission further finds and deems it necessary to carry out the provisions of chapter 18.25 RCW that this rule be adopted to give guidance to members of the profession, and the public, in interpreting for purposes of application by the disciplinary commission of RCW 18.25.112, the scope of health care which comes within the definition of chiropractic in RCW 18.25.005 and which is authorized under a license to practice chiropractic in the state of Washington.

(2) RCW 18.25.005 defines the term "chiropractic." The commission finds that the following diagnostic techniques and procedures, by whatever name known, are not within the definition of "chiropractic" as specified in RCW 18.25.005, and, consequently, a license to practice chiropractic does not authorize their use:

(a) The use of X rays or other forms of radiation for any other reason than to X ray the human skeleton.

(b) The use of any form of electrocardiogram.

(c) The testing and reduction to mathematical formulae of sputum and/or urine (commonly known as "reams" testing).

(d) Hair analysis.

(e) The use of iridology.

(f) The taking of blood samples.

(g) Female breast examinations.

The above list is not to be considered exhaustive or to limit the commission in any way from finding under the statutory definition in RCW 18.25.005 that any other diagnostic technique or procedure is outside the scope of chiropractic practice.

(3) The commission finds that the following treatment modalities, by whatever name known, are not within the definition of "chiropractic" as specified in subsection (2) of this section and in RCW 18.25.005 and, consequently, a license to practice chiropractic does not authorize their use:

(a) Ultrasound, diathermy, high voltage galvanic therapy and X rays or other radiation.

(b) Electrotherapy.

(c) The use of a transcutaneous electrical nerve stimulator (TENS).

(d) The use of the endonasal technique.

(e) The use of any type of casting other than light body casting.

(f) The use of meridian therapy, whether known as "acupressure," or the same type of therapy under any other names unless complementary or preparatory to a chiropractic spinal adjustment.

(g) The use of hypnosis.

(h) The use of clinical herbology.

The above list is not to be considered exhaustive or to limit the commission in any way from finding under the statutory definition in RCW 18.25.005 that any other treatment modalities are outside the scope of chiropractic practice.

(4) The use by a chiropractor of diagnostic techniques or procedures or treatment modalities which are outside the definition of chiropractic in RCW 18.25.005, whether or not listed in this rule, or the use by a chiropractor of any of the diagnostic techniques and procedures listed in subsection (2) of this section or the use by a chiropractor of any of the treatment modalities listed in subsection (3) of this section shall constitute unprofessional conduct under RCW 18.130.180 (12) which shall be good and sufficient cause for revocation or suspension of that chiropractor's license to practice chiropractic in Washington.

[Statutory Authority: Chapter 18.25 RCW. 96-16-074, § 246-808-640, filed 8/6/96, effective 9/6/96.]

WAC 246-808-650 Records and X rays and withdrawal from practice—Maintenance and retention of patient records. (1) Any chiropractor who treats patients in the state of Washington shall maintain all treatment records regarding patients treated. These records may include, but shall not be limited to, X rays, treatment plans, patient charts, patient histories, correspondence, financial data, and billing. These records shall be retained by the chiropractor for five years in an orderly, accessible file and shall be readily available for inspection by the commission or its authorized representative: X rays or copies of records may be forwarded pursuant to a licensed agent's written request. Also, office records shall state the date on which the records were released, method forwarded and to whom, and the reason for the release. A reasonable fee may be charged the patient to cover mailing and clerical costs.

(2) A chiropractor shall honor within fifteen days a written request from an adult patient or their legal representative or the legal representative of a minor child to release:

(a) Original X rays and records to other licensed health care providers; or

(b) The chiropractor may provide duplicate films or a copy of the patient records to the health care provider or the patient. The health care provider may bill the patient reasonable duplication costs. Once the original films have been loaned at patient request, the chiropractor is no longer

responsible for them, or for their retrieval or subsequent production.

A chiropractor who has received original X rays on a loan basis shall return them to the loaning chiropractor upon request within sixty days unless other arrangements are made.

[Statutory Authority: Chapter 18.25 RCW. 96-16-074, § 246-808-650, filed 8/6/96, effective 9/6/96.]

WAC 246-808-655 Duties of a chiropractor who retires or withdraws from practice. Any chiropractor who ceases practice in their community for any reason, including retirement, illness, disability, or relocation shall comply with the following duties:

(1) The chiropractor shall notify all current patients that they shall not be able to provide chiropractic services and shall notify the patient to seek another chiropractor to continue their care.

(2) The chiropractor shall offer to deliver to the patient, or to another chiropractor or licensed health care professional chosen by the patient, the originals or copies of all patient examination and treatment records and X rays or notify the patient of a community area location where the records and X rays shall be maintained and accessible for at least one year after the notice is sent to the patient.

(3) The chiropractor shall refund any part of fees paid in advance that have not been earned.

(4) The commission requests that the executor or executrix of a deceased chiropractor comply with the duties set forth herein to the fullest extent possible. The commission staff shall provide advice and assistance to such executor or executrix upon request.

(5) For the purpose of this section, any relocation or restriction of practice which substantially interferes with a patient's reasonable access to their chiropractor shall be cause for the chiropractor to comply with the duties set forth.

(6) Willful failure to comply with this section shall be cause to suspend a chiropractor's license until the required duties are fulfilled.

[Statutory Authority: Chapter 18.25 RCW. 96-16-074, § 246-808-655, filed 8/6/96, effective 9/6/96.]

WAC 246-808-660 Mandatory reporting. (1) All reports required by these regulations shall be submitted to the commission as soon as possible, but no later than sixty days after a determination is made.

(2) A report shall contain the following information if known:

(a) The name, address, and telephone number of the person making the report.

(b) The name, address, and telephone number of the chiropractor being reported.

(c) The name of any patient whose treatment is a subject of the report.

(d) A brief description or summary of the facts which gave rise to the issuance of the report, including dates of occurrences.

(e) If court action is involved, the name of the court in which the action is filed along with the date of filing and docket number.

(f) Any further information which would aid the evaluation of the report.

[Statutory Authority: Chapter 18.25 RCW. 96-16-074, § 246-808-660, filed 8/6/96, effective 9/6/96.]

WAC 246-808-670 Chiropractic associations or societies. The president or chief executive officer of any chiropractic association or society within this state shall report to the commission when an association or society determines that a chiropractor has committed unprofessional conduct or that a chiropractor may not be able to practice chiropractic with reasonable skill and safety to patients as the result of any mental or physical condition and constitutes an apparent risk to the public health, safety, or welfare. The report required by this section shall be made without regard to whether the license holder appeals, accepts, or acts upon the determination made by the association or society. Notification of appeal shall be included.

[Statutory Authority: Chapter 18.25 RCW. 96-16-074, § 246-808-670, filed 8/6/96, effective 9/6/96.]

WAC 246-808-680 Insurance carriers. The executive officer of every insurer, licensed under Title 48 RCW operating in the state of Washington, shall report to the commission any evidence that a chiropractor has charged fees for chiropractic services not actually provided, or has otherwise committed unprofessional conduct.

[Statutory Authority: Chapter 18.25 RCW. 96-16-074, § 246-808-680, filed 8/6/96, effective 9/6/96.]

WAC 246-808-685 Professional liability carriers. Every institution or organization providing professional liability insurance directly or indirectly to chiropractors shall send the commission a complete report of any malpractice settlement, award or payment over thirty thousand dollars as a result of a claim or action for damages alleged to have been caused by an insured chiropractor's incompetence or negligence in the practice of chiropractic. Such institution or organization shall also report the payment of three or more claims during a year as the result of alleged incompetence or negligence in the practice of chiropractic regardless of the dollar amount of the payment.

[Statutory Authority: Chapter 18.25 RCW. 96-16-074, § 246-808-685, filed 8/6/96, effective 9/6/96.]

WAC 246-808-690 Courts. The commission requests the assistance of all clerks of trial courts within the state to report to the commission, all professional malpractice judgments and all criminal convictions of licensed chiropractors, other than for minor traffic violations.

[Statutory Authority: Chapter 18.25 RCW. 96-16-074, § 246-808-690, filed 8/6/96, effective 9/6/96.]

WAC 246-808-695 State and federal agencies. The commission requests the assistance of executive officers of any state or federal program operating in the state of Washington, under which a chiropractor has been judged to have demonstrated incompetence or negligence in the practice of chiropractic, or has otherwise committed unprofessional conduct; or whose practice is impaired as a result of a mental,

physical or chemical condition, to report to the commission all professional malpractice judgments and decisions.

[Statutory Authority: Chapter 18.25 RCW. 96-16-074, § 246-808-695, filed 8/6/96, effective 9/6/96.]

WAC 246-808-700 Cooperation with investigation. (1) A chiropractor shall comply with a request for records, documents or explanation from an investigator who is acting on behalf of the commission, by submitting the requested items within fourteen calendar days of receipt of the request by the chiropractor or the chiropractor's attorney, whichever is first.

(2) If the chiropractor fails to comply with the request within fourteen calendar days, the investigator shall contact the chiropractor or the chiropractor's attorney by telephone or letter as a reminder.

(3) Investigators may extend the time for response if the chiropractor requests an extension for a period not to exceed seven calendar days.

(4) If the chiropractor fails to comply with the request within three business days after the receipt of the reminder, then a subpoena shall be served upon the chiropractor to obtain the requested items.

(5) If the chiropractor fails to comply with the subpoena, a statement of charges shall be issued pursuant to RCW 18.130.180(8) and, if there is sufficient evidence to support additional charges, then those charges may be included in the statement of charges.

(6) If the chiropractor complies with the request after the issuance of the statement of charges, the commission's assistant attorney general-prosecutor shall decide whether the charges based on RCW 18.130.180(8) shall be prosecuted or settled. If the charges based on RCW 18.130.180(8) are to be settled, the settlement proposal shall be presented to the commission or a duly constituted panel of the commission for a decision on ratification and until ratified, the settlement is not final.

[Statutory Authority: Chapter 18.25 RCW. 96-16-074, § 246-808-700, filed 8/6/96, effective 9/6/96.]

WAC 246-808-720 Commission conflict of interest. Members of the commission shall not participate in deciding a case or in rule making where their participation presents a conflict of interest, creates an appearance of a conflict of interest or where the commission determines the member's participation raises questions as to the impartiality of the commission.

[Statutory Authority: Chapter 18.25 RCW. 96-16-074, § 246-808-720, filed 8/6/96, effective 9/6/96.]

SUBSTANCE ABUSE MONITORING

WAC 246-808-801 Purpose. The commission recognizes the need to establish a means of proactively providing early recognition and treatment options for chiropractors whose competency may be impaired due to the abuse of drugs or alcohol. The commission intends that such chiropractors be treated and their treatment monitored so that they can return to or continue to practice their profession in a way which safeguards the public. To accomplish this, the commission shall approve voluntary substance abuse monitoring programs and shall refer chiropractors impaired by substance abuse to approved programs as an alternative to instituting disciplinary proceedings as defined in RCW 18.130.160.

[Statutory Authority: Chapter 18.25 RCW. 96-16-074, § 246-808-801, filed 8/6/96, effective 9/6/96.]

WAC 246-808-810 Definitions. The following general terms are defined within the context used in this chapter:

"Aftercare" is that period of time after intensive treatment that provides the chiropractor and the chiropractor's family with group or individual counseling sessions, discussions with other families, ongoing contact and participation in self-help groups and ongoing continued support of treatment program staff.

"Approved substance abuse monitoring program" or **"approved monitoring program"** is a program the commission has determined meets the requirements of the law and the criteria established by the commission in WAC 246-808-820 which enters into a contract with chiropractors who have substance abuse problems regarding the required components of the chiropractor's recovery activity and oversees the chiropractor's compliance with these requirements. Substance abuse monitoring programs do not provide evaluation or treatment to participating chiropractors.

"Approved treatment facility" is a facility approved by the bureau of alcohol and substance abuse, department of social and health services according to RCW 70.96A.020(2) or 69.54.030 to provide intensive alcoholism or drug treatment if located within Washington state. Drug and alcohol treatment programs located out-of-state must be equivalent to the standards required for approval under RCW 70.96A.020 (2) or 69.54.030.

"Contract" is a comprehensive, structured agreement between the recovering chiropractor and the approved monitoring program stipulating the chiropractor's consent to comply with the monitoring program and its required components of the chiropractor's recovery activity.

"Health care professional" is an individual who is licensed, certified, or registered in Washington to engage in the delivery of health care to patients.

"Random drug screens" are laboratory tests to detect the presence of drugs of abuse in body fluids which are performed at irregular intervals not known in advance by the person being tested.

"Substance abuse" means the impairment, as determined by the commission, of a chiropractor's professional services by an addiction to, a dependency on, or the use of alcohol, legend drugs, or controlled substances.

"Support group" is a group of health care professionals meeting regularly to support the recovery of its members. The group provides a confidential setting with a trained and experienced health care professional facilitator in which chiropractors may safely discuss drug diversion, licensure issues, return to work, and other professional issues related to recovery.

"Twelve-step groups" are groups such as alcoholics anonymous, narcotics anonymous, and related organizations based on a philosophy of anonymity, belief in a power outside of oneself, a peer group association, and self-help.

[Statutory Authority: Chapter 18.25 RCW. 96-16-074, § 246-808-810, filed 8/6/96, effective 9/6/96.]

WAC 246-808-820 Approval of substance abuse monitoring programs. The commission shall approve the monitoring program(s) which shall participate in the commission's substance abuse monitoring program. A monitoring program approved by the commission may be contracted with an entity outside the department but within the state, out-of-state, or a separate structure within the department.

(1) The approved monitoring program shall not provide evaluation or treatment to the participating chiropractor.

(2) The approved monitoring program staff must have the qualifications and knowledge of both substance abuse and the practice of chiropractic as defined in this chapter to be able to evaluate:

(a) Clinical laboratories;

(b) Laboratory results;

(c) Providers of substance abuse treatment, both individuals and facilities;

(d) Support groups;

(e) The chiropractic work environment; and

(f) The ability of the chiropractor to practice with reasonable skill and safety.

(3) The approved monitoring program shall enter into a contract with the chiropractor and the commission to oversee the chiropractor's compliance with the requirements of the program.

(4) The approved monitoring program may make exceptions to individual components of the contract on an individual basis.

(5) The approved monitoring program staff shall recommend, on an individual basis, whether a chiropractor shall be prohibited from engaging in the practice of chiropractic for a period of time and restrictions, if any, on the chiropractor's access to controlled substances in the workplace.

(6) The approved monitoring program shall maintain records on participants.

(7) The approved monitoring program shall be responsible for providing feedback to the chiropractor as to whether treatment progress is acceptable.

(8) The approved monitoring program shall report to the commission any chiropractor who fails to comply with the requirements of the monitoring program.

(9) The approved monitoring program shall receive from the commission guidelines on treatment, monitoring, and limitations on the practice of chiropractic for those participating in the program.

[Statutory Authority: Chapter 18.25 RCW. 96-16-074, § 246-808-820, filed 8/6/96, effective 9/6/96.]

WAC 246-808-830 Participation in approved substance abuse monitoring program. (1) In lieu of disciplinary action, the chiropractor may accept commission referral into the approved substance abuse monitoring program.

(a) The chiropractor shall undergo a complete physical and psychosocial evaluation before entering the approved monitoring program. This evaluation shall be performed by health care professional(s) with expertise in chemical dependency. The person(s) performing the evaluation shall not also be the provider of the recommended treatment.

(b) The chiropractor shall enter into a contract with the commission and the approved substance abuse monitoring program to comply with the requirements of the program which shall include, but not be limited to:

(i) The chiropractor shall undergo intensive substance abuse treatment in an approved treatment facility.

(ii) The chiropractor shall agree to remain free of all mind-altering substances including alcohol, except for medications prescribed by an authorized prescriber, as defined in RCW 69.41.030 and 69.50.101.

(iii) The chiropractor must complete the prescribed aftercare program of the intensive treatment facility, which may include individual and/or group psychotherapy.

(iv) The treatment counselor(s) shall provide reports to the approved monitoring program at specified intervals. Reports shall include treatment, prognosis, and goals.

(v) The chiropractor shall submit to random drug screening as specified by the approved monitoring program.

(vi) The chiropractor shall attend support groups facilitated by a health care professional and/or twelve-step group meetings as specified by the contract.

(vii) The chiropractor shall comply with specified employment conditions and restrictions as defined by the contract.

(viii) The chiropractor shall sign a waiver allowing the approved monitoring program to release information to the commission if the chiropractor does not comply with the requirements of this contract.

(c) The chiropractor is responsible for paying the costs of the physical and psychosocial evaluation, substance abuse treatment, and random drug screens.

(d) The chiropractor may be subject to disciplinary action under RCW 18.130.160 if the chiropractor does not consent to be referred to the approved monitoring program, does not comply with specified employment restrictions, or does not successfully complete the program.

(2) A chiropractor who is not being investigated by the commission or subject to current disciplinary action or currently being monitored by the commission for substance abuse may voluntarily participate in the approved substance abuse monitoring program without being referred by the commission. Such voluntary participants shall not be subject to disciplinary action under RCW 18.130.160 for their substance abuse, and shall not have their participation made known to the commission if they meet the requirements of the approved monitoring program as defined in subsection (1) of this section.

(3) The treatment and pretreatment records of license holders referred to or voluntarily participating in approved monitoring programs shall be confidential, shall be exempt from RCW 42.17.250 through 42.17.450 and shall not be subject to discovery by subpoena or admissible as evidence except for monitoring records reported to the disciplinary authority for cause as defined in subsection (1) of this section. Records held by the commission under this section shall be exempt from RCW 42.17.250 through 42.17.450 and shall not be subject to discovery by subpoena except by the license holder.

[Statutory Authority: Chapter 18.25 RCW. 96-16-074, § 246-808-830, filed 8/6/96, effective 9/6/96.]

CHIROPRACTIC FEES

WAC 246-808-990 Chiropractic fees and renewal cycle. (1) Licenses and registrations must be renewed on the practitioner's birthday every year as provided in chapter 246-12 WAC, Part 2. The secretary may require payment of renewal fees less than those established in this section if the current level of fees is likely to result in a surplus of funds. Surplus funds are those in excess of the amount necessary to pay for the costs of administering the program and to maintain a reasonable reserve. Notice of any adjustment in the required payment will be provided to practitioners. The adjustment in the required payment shall remain in place for the duration of a renewal cycle to assure practitioners an equal benefit from the adjustment.

(2) The following nonrefundable fees will be charged for chiropractic license:

Title of Fee	Fee
Application/full examination or reexamination	$575.00
Temporary permit application	150.00
Temporary practice permit	50.00
Preceptorship	100.00
License renewal	520.00
Late renewal penalty	260.00
Expired license reissuance	260.00
Inactive license renewal	200.00
Expired inactive license reissuance	100.00
Duplicate license	15.00
Certification of license	25.00
UW library access fee	25.00

(3) The following nonrefundable fees will be charged for chiropractic X-ray technician registration:

Title of Fee	Fee
Application	35.00
Original registration	35.00
Renewal	50.00
Late renewal penalty	50.00
Expired registration reissuance	50.00
Duplicate registration	15.00
Certification of registration	25.00

[Statutory Authority: RCW 43.70.110, 43.70.250, 2008 c 329. 08-15-014, § 246-808-990, filed 7/7/08, effective 7/7/08. Statutory Authority: RCW 43.70.250, [43.70.]280 and 43.70.110. 05-12-012, § 246-808-990, filed 5/20/05, effective 7/1/05. Statutory Authority: RCW 43.70.250. 99-08-101, § 246-808-990, filed 4/6/99, effective 7/1/99. Statutory Authority: RCW 43.70.280. 98-05-060, § 246-808-990, filed 2/13/98, effective 3/16/98. Statutory Authority: Chapter 18.25 RCW. 96-16-074, § 246-808-990, filed 8/6/96, effective 9/6/96.]

Chapter 246-809 WAC

LICENSURE FOR MENTAL HEALTH COUNSELORS, MARRIAGE AND FAMILY THERAPISTS, AND SOCIAL WORKERS

WAC

LICENSED COUNSELORS—GENERAL REQUIREMENTS

246-809-010 Definitions.
246-809-035 Record keeping and retention.
246-809-040 Reporting of suspected abuse or neglect of a child, dependent adult, or a developmentally disabled person.
246-809-049 Sexual misconduct.
246-809-060 Mandatory reporting.
246-809-061 Health care institutions.
246-809-062 Licensed counselor associations or societies.
246-809-063 Health care service contractors and disability insurance carriers.
246-809-064 Professional liability carriers.
246-809-065 Courts.
246-809-066 State and federal agencies.
246-809-080 AIDS prevention and information education requirements.

LICENSED MARRIAGE AND FAMILY THERAPISTS

246-809-110 Definitions.
246-809-120 Education requirements—Degree equivalents.
246-809-121 Program equivalency.
246-809-130 Supervised postgraduate experience.
246-809-134 Approved supervisor.
246-809-140 Examination.

LICENSED MENTAL HEALTH COUNSELORS

246-809-210 Definitions.
246-809-220 Education requirements.
246-809-221 Behavioral sciences—Program equivalency.
246-809-230 Supervised postgraduate experience.
246-809-234 Approved supervisor.
246-809-240 Examination for licensed mental health counselors.

LICENSED SOCIAL WORKERS

246-809-310 Definitions.
246-809-320 Education requirements and supervised postgraduate experience.
246-809-321 Education and experience equivalency.
246-809-334 Approved supervisor standards and responsibilities.
246-809-340 Examination required.

CONTINUING EDUCATION

246-809-600 Who is required to have continuing education?
246-809-610 What courses are acceptable?
246-809-620 What are industry-recognized local, state, national, international organizations or institutions of higher learning?
246-809-630 How many hours do I need and in what time period?
246-809-640 How are credit hours determined for preparation and presentation of a lecture or an educational course?
246-809-650 How do I document my courses?
246-809-700 Client disclosure information.
246-809-710 Required disclosure information.
246-809-720 Failure to provide client disclosure information.
246-809-990 Licensed mental health counselors, marriage and family therapists, and social workers—Fees and renewal cycle.

LICENSED COUNSELORS—GENERAL REQUIREMENTS

WAC 246-809-010 Definitions. The following terms are defined within the meaning of this chapter.

"Licensed counselor" means a licensed marriage and family therapist, licensed mental health counselor, licensed advanced social worker, or licensed independent clinical social worker regulated under chapter 18.225 RCW.

[Statutory Authority: RCW 18.225.040, 18.130.050. 06-09-032, § 246-809-010, filed 4/12/06, effective 5/13/06.]

WAC 246-809-035 Record keeping and retention. (1) The licensed counselor providing professional services to a client or providing services billed to a third-party payor, shall document services, except as provided in subsection (2) of this section. The documentation includes:

(a) Client name;

(b) The fee arrangement and record of payments;

(c) Dates counseling was received;

(d) Disclosure form, signed by licensed counselor and client;

(e) The presenting problem(s), purpose or diagnosis;

(f) Notation and results of formal consults, including information obtained from other persons or agencies through a release of information;

(g) Progress notes sufficient to support responsible clinical practice for the type of theoretical orientation/therapy the licensed counselor uses.

(2) If a client requests that no treatment records be kept, and the licensed counselor agrees to the request, the request must be in writing and the counselor must retain only the following documentation:

(a) Client name;

(b) Fee arrangement and record of payments;

(c) Dates counseling was received;

(d) Disclosure form, signed by licensed counselor and client;

(e) Written request that no records be kept.

(3) The licensed counselor may not agree to the request if maintaining records is required by other state or federal law.

(4) The licensed counselor must keep all records for a period of five years following the last visit. Within this five-year period, all records must be maintained safely, with properly limited access.

(5) The licensed counselor must make provisions for retaining or transferring records in the event of going out of business, death or incapacitation. These provisions may be made in the practitioner's will, an office policy, or by ensuring another licensed counselor is available to review records with a client and recommend a course of action; or other appropriate means as determined by the licensed counselor.

[Statutory Authority: RCW 18.225.040, 18.130.050. 06-09-032, § 246-809-035, filed 4/12/06, effective 5/13/06.]

WAC 246-809-040 Reporting of suspected abuse or neglect of a child, dependent adult, or a developmentally disabled person. As required by chapters 26.44 and 74.34 RCW, all licensed counselors must report abuse or neglect of a child, dependent adult, or developmentally disabled person if the counselor has reasonable cause to believe that an incident has occurred.

The counselor shall report to the local law enforcement agency or to the department of social and health services at the first opportunity, but no longer than forty-eight hours after deciding there is reasonable cause to believe that the child or adult has suffered abuse or neglect.

[Statutory Authority: RCW 18.225.040, 18.130.050. 06-09-032, § 246-809-040, filed 4/12/06, effective 5/13/06.]

WAC 246-809-049 Sexual misconduct. (1) The definitions and prohibitions on sexual misconduct described in chapter 246-16 WAC apply to licensed marriage and family therapists, licensed mental health counselors, and licensed social workers except WAC 246-16-100 (3) and (4).

(2) A licensed marriage and family therapist, licensed mental health counselor, or licensed social worker shall never engage, or attempt to engage, in the activities listed in WAC 246-16-100(1) with a former patient, former client or former key party.

[Statutory Authority: RCW 18.155.040, 18.19.050, 18.225.040, 18.205.060, 18.130.050. 08-07-090, § 246-809-049, filed 3/19/08, effective 4/19/08. Statutory Authority: RCW 18.225.040, 18.130.050. 06-09-032, § 246-809-049, filed 4/12/06, effective 5/13/06.]

WAC 246-809-060 Mandatory reporting. (1) All reports required by this chapter shall be submitted to the department as soon as possible, but no later than twenty days after a determination is made.

(2) Reports made in accordance with WAC 246-809-061, 246-809-062, 246-809-063, and 246-809-064 should contain the following information if known:

(a) The name, address, and telephone number of the person making the report.

(b) The name, address, and telephone number of the licensed counselor being reported.

(c) The case number of any client or patient whose treatment is a subject of the report.

(d) A brief description or summary of the facts which gave rise to the issuance of the report, including dates of occurrences.

(e) If court action is involved, the name of the court in which the action is filed along with the date of filing and docket number.

(f) Any further information which would aid in the evaluation of the report.

(3) Mandatory reports are exempt from public inspection and copying to the extent permitted under chapter 42.17 RCW.

(4) A person is immune from civil liability, whether direct or derivative, for providing information to the department under RCW 18.130.070.

[Statutory Authority: RCW 18.225.040, 18.130.050. 06-09-032, § 246-809-060, filed 4/12/06, effective 5/13/06.]

WAC 246-809-061 Health care institutions. (1) The chief administrator or executive officer or designee of any hospital, nursing home, chemical dependency treatment programs defined in chapter 70.96A RCW, drug treatment agency defined in chapter 69.54 RCW, and public and private mental health treatment agencies defined in RCW 71.05.020, and 71.24.025, shall report to the department when:

(a) Any licensed counselor's services are terminated or are restricted based upon a determination that the licensed counselor has committed an act which may constitute unprofessional conduct; or

(b) The licensed counselor may be unable to practice with reasonable skill or safety to clients by reason of a mental or physical condition.

(2) The reports must be made in accordance with WAC 246-809-060.

[Statutory Authority: RCW 18.225.040, 18.130.050. 06-09-032, § 246-809-061, filed 4/12/06, effective 5/13/06.]

WAC 246-809-062 Licensed counselor associations or societies. (1) The president or chief executive officer of any licensed counselor association or society within this state shall report to the department when the association or society determines:

(a) A licensed counselor has committed unprofessional conduct; or

(b) A licensed counselor may not be able to practice counseling with reasonable skill and safety to clients as the result of any mental or physical condition.

(2) The report required by this section shall be made without regard to whether the licensed counselor appeals, accepts, or acts upon the determination made by the association or society. Notification of appeal shall be included.

(3) Reports must be made in accordance with WAC 246-809-060.

[Statutory Authority: RCW 18.225.040, 18.130.050. 06-09-032, § 246-809-062, filed 4/12/06, effective 5/13/06.]

WAC 246-809-063 Health care service contractors and disability insurance carriers. (1) The executive officer of every health care service contractor and disability insurer, licensed under chapters 48.20, 48.21, 48.21A, and 48.44 RCW, operating in the state of Washington shall report to the department all final determinations that a licensed counselor has engaged in fraud in billing for services.

(2) Reports are to be made in accordance with WAC 246-809-060.

[Statutory Authority: RCW 18.225.040, 18.130.050. 06-09-032, § 246-809-063, filed 4/12/06, effective 5/13/06.]

WAC 246-809-064 Professional liability carriers. (1) Every institution or organization providing professional liability insurance directly or indirectly to licensed counselors shall send a complete report to the department of any malpractice settlement, award, or payment in excess of twenty thousand dollars as a result of a claim or action for damages alleged to have been caused by an insured licensed counselor's incompetency or negligence in the practice of counseling.

(2) The institution or organization shall also report the award, settlement, or payment of three or more claims during a twelve-month period as a result of the licensed counselor's alleged incompetence or negligence in the practice of counseling.

(3) Reports must be made in accordance with WAC 246-809-060.

[Statutory Authority: RCW 18.225.040, 18.130.050. 06-09-032, § 246-809-064, filed 4/12/06, effective 5/13/06.]

WAC 246-809-065 Courts. The department requests the assistance of the clerk of trial courts within the state to report to the department all professional malpractice judgments and all convictions of licensed counselors, other than minor traffic violations.

[Statutory Authority: RCW 18.225.040, 18.130.050. 06-09-032, § 246-809-065, filed 4/12/06, effective 5/13/06.]

WAC 246-809-066 State and federal agencies. (1) The department requests the assistance of executive officers of any state or federal program operating in the state of Washington, under which a licensed counselor is employed to provide client care services, to report to the department when:

(a) A licensed counselor has been judged to have demonstrated his/her incompetency or negligence in the practice of counseling; or

(b) Has otherwise committed unprofessional conduct; or

(c) May not be able to practice with reasonable skill and safety by reason of any mental or physical condition.

(2) These requirements do not supersede any federal or state law.

[Statutory Authority: RCW 18.225.040, 18.130.050. 06-09-032, § 246-809-066, filed 4/12/06, effective 5/13/06.]

WAC 246-809-080 AIDS prevention and information education requirements. Applicants must complete four clock hours of AIDS education as required in chapter 246-12 WAC, Part 8.

[Statutory Authority: 2001 c 251, RCW 43.70.250. 01-17-113, § 246-809-080, filed 8/22/01, effective 9/22/01.]

LICENSED MARRIAGE AND FAMILY THERAPISTS

WAC 246-809-110 Definitions. The following terms apply to the licensure of marriage and family therapists.

(1) "Approved educational program" means:

(a) Any college or university accredited by a national or regional accrediting body recognized by the Commission on Recognition of Postsecondary Accreditation or its successor; or

(b) A program accredited by the Commission on Accreditation for Marriage and Family Therapy Education (COAMFTE), at the time the applicant completed the required education.

(2) "Approved supervisor" means a licensed marriage and family therapist, or an equally qualified licensed mental health practitioner.

(3) "Equally qualified licensed mental health practitioner" means a licensed mental health counselor, licensed clinical social worker, licensed psychologist, licensed physician practicing as a psychiatrist, or licensed psychiatric nurse practitioner, who has completed:

(a) Three hundred clock hours in graduate or postgraduate marriage and family education, or continuing education in marriage and family therapy or supervision by an approved marriage and family therapist supervisor in marriage and family therapy or any combination of these; and

(b) Five years of clinical practice that includes the equivalent of one year of clinical practice working with couples and families.

(4) "Group supervision" means face-to-face supervision with an approved supervisor, involving one supervisor and no more than six licensure candidates.

(5) "Licensure candidate" means an individual that is accruing supervised clinical experience required for licensure.

(6) "One-on-one supervision" means face-to-face supervision with an approved supervisor, involving one supervisor and no more than two licensure candidates.

(7) "Supervised experience requirement" means experience that is obtained under an approved supervisor who meets the requirements described in WAC 246-809-134.

(8) "Supervision of supervision" means supervision by an approved supervisor for the purpose of training and quali-

fying a license holder to act as an approved supervisor for purposes of chapter 18.225 RCW and WAC 246-809-134.

(9) "Peer" means a co-worker who is not the licensure candidate's employer or supervisor.

[Statutory Authority: RCW 18.225.040 and [18.225.]090. 06-18-043, § 246-809-110, filed 8/30/06, effective 9/30/06.]

WAC 246-809-120 Education requirements—Degree equivalents. (1) To meet the education requirement of chapter 251, Laws of 2001, an applicant must possess a master's or doctoral degree in marriage and family therapy or a behavioral science master's or doctoral degree with equivalent coursework from an approved school. An official transcript must be provided as evidence of fulfillment of the coursework required.

(2) The following are considered to be equivalent to a master's or doctoral degree in marriage and family therapy from an approved school:

(a) A doctoral or master's degree from an approved school in any of the behavioral sciences that shows evidence of fulfillment of the coursework requirements set out in WAC 246-809-121; or

(b) A doctoral or master's degree in any of the behavioral sciences from an approved school that shows evidence of partial fulfillment of the equivalent coursework requirements set out in WAC 246-809-121, plus supplemental coursework from an approved school to satisfy the remaining equivalent coursework requirements set out in WAC 246-809-121.

(3) Applicants who held a behavioral science master's or doctoral degree and are completing supplemental coursework through an approved school to satisfy any missing program equivalencies may count any postgraduate experience hours acquired concurrently with the additional coursework.

(4) Anyone who has obtained American Association for Marriage and Family Therapy (AAMFT) clinical membership status is considered to have met the education requirements of this chapter. Verification must be sent directly to the department from the AAMFT.

[Statutory Authority: 2001 c 251, RCW 43.70.250. 01-17-113, § 246-809-120, filed 8/22/01, effective 9/22/01.]

WAC 246-809-121 Program equivalency. Coursework equivalent to a master's or doctoral degree in marriage and family therapy shall include graduate level courses in marital and family systems, marital and family therapy, individual development psychopathology, human sexuality, research, professional ethics and law, and supervised clinical practice and electives.

A total of forty-five semester credits and sixty quarter credits are required in all nine areas of study. A minimum of twenty-seven semester credits or thirty-six quarter credits are required in the first five areas of study: Marital and family systems, marital and family therapy, individual development psychopathology, human sexuality, and research. Distribution of the coursework is as follows:

(1) Marital and family systems.

(a) An applicant must have taken at least two courses in marital and family systems. Coursework required is a minimum of six semester credits or eight quarter credits.

(b) Marital and family systems is a fundamental introduction to the systems approach to intervention. The student should learn to think in systems terms on a number of levels across a wide variety of family structures, and regarding a diverse range of presenting problems. While the most intense focus may be on the nuclear family (in both its traditional and alternative forms), models should be taught which integrate information regarding the marital, sibling, and individual subsystems, as well as the family of origin and external societal influences. Developmental aspects of family functioning should also be considered of the family system; it also provides a theoretical basis for treatment strategy. Some material may be drawn from familiar sources such as family sociology, but it should be integrated with recent clinically oriented systems concepts. Supplemental studies may include family simulation, the observation of well families, and study of the student's family of origin.

(2) Marital and family therapy.

(a) An applicant must have taken at least two courses in marital and family therapy. Coursework required is a minimum of six semester credits or eight quarter credits.

(b) Marital and family therapy is intended to provide a substantive understanding of the major theories of systems change and the applied practices evolving from each orientation. Major theoretical approaches to be surveyed might include strategic, structural, experiential, neoanalytical (e.g., object relations), communications, and behavioral. Applied studies should consider the range of technique associated with each orientation, as well as a variety of treatment structures, including individual, concurrent, collaborative, conjoint marital, marital group, transgenerational, and network therapies.

(3) Individual development.

(a) An applicant must have taken at least one course in individual development. Coursework required is a minimum of two semester credits or three quarter credits.

(b) A course in this area is intended to provide a knowledge of individual personality development and its normal and abnormal manifestations. The student should have relevant coursework in human development across the life span, and in personality theory. An attempt should be made to integrate this material with systems concepts. Several of the courses in this category may be required as prerequisites for some degree programs.

(4) Psychopathology.

(a) An applicant must have taken at least one course in psychopathology. Coursework required is a minimum of two semester credits or three quarter credits.

(b) Psychopathology is the assessment and diagnosis including familiarity with current diagnostic nomenclature, diagnostic categories and the development of treatment strategies.

(5) Human sexuality.

(a) An applicant must have taken at least one course in human sexuality. Coursework required is a minimum of two semester credits or three quarter credits.

(b) Human sexuality includes normal psycho-sexual development, sexual functioning and its physiological aspects and sexual dysfunction and its treatment.

(6) Research.

(a) An applicant must have taken at least one course in research methods. Coursework required is a minimum of three semester credits or four quarter credits.

(b) The research area is intended to provide assistance to students in becoming informed consumers of research in the marital and family therapy field. Familiarity with substantive findings, together with the ability to make critical judgments as to the adequacy of research reports, is expected.

(7) Professional ethics and law.

(a) An applicant must have taken at least one course in professional ethics and law. Coursework required is a minimum of three semester credits or four quarter credits.

(b) This area is intended to contribute to the development of a professional attitude and identity. Areas of study will include professional socialization and the role of the professional organization, licensure or certification legislation, legal responsibilities and liabilities, ethics and family law, confidentiality, independent practice and interprofessional cooperation.

(8) Electives.

(a) An individual must take one course in an elective area. Coursework required is a minimum of three semester credits and four quarter credits.

(b) This area will vary with different institutions but is intended to provide supplemental and/or specialized supporting areas.

(9) Supervised clinical practice.

(a) An applicant may acquire up to nine semester credits or twelve quarter credits through supervised clinical practice in marriage and family therapy under the supervision of a qualified marriage and family therapist as determined by the school;

(b) If an applicant completed a master's or doctoral degree program in marriage and family therapy, or a behavioral science master's or doctoral degree with equivalent coursework, prior to January 1, 1997; and if that degree did not include a supervised clinical practice component, the applicant may substitute the clinical practice component with proof of a minimum of three years postgraduate experience in marriage and family therapy, in addition to the two years supervised postgraduate experience required under section 9(1), chapter 251, Laws of 2001.

[Statutory Authority: 2001 c 251, RCW 43.70.250. 01-17-113, § 246-809-121, filed 8/22/01, effective 9/22/01.]

WAC 246-809-130 Supervised postgraduate experience. The experience requirements for the marriage and family therapist applicant's practice area include successful completion of a supervised experience requirement. The experience requirement consists of a minimum of two calendar years of full-time marriage and family therapy. Of the total supervision, one hundred hours must be with a licensed marriage and family therapist with at least five years' clinical experience; the other one hundred hours may be with an equally qualified licensed mental health practitioner. Total experience requirements include:

(1) A minimum of three thousand hours of experience, one thousand hours of which must be direct client contact; at least five hundred hours must be gained in diagnosing and treating couples and families; plus

(2) At least two hundred hours of qualified supervision with an approved supervisor. At least one hundred of the two hundred hours must be one-on-one supervision, and the remaining hours may be in one-on-one or group supervision.

(3) Applicants who have completed a master's program accredited by the Commission on Accreditation for Marriage and Family Therapy Education of the American Association for Marriage and Family Therapy may be credited with five hundred hours of direct client contact and one hundred hours of formal meetings with an approved supervisor.

[Statutory Authority: RCW 18.225.040 and [18.225.]090. 06-18-043, § 246-809-130, filed 8/30/06, effective 9/30/06. Statutory Authority: 2001 c 251, RCW 43.70.250. 01-17-113, § 246-809-130, filed 8/22/01, effective 9/22/01.]

WAC 246-809-134 Approved supervisor. (1) The approved supervisor shall hold a license without restrictions that has been in good standing for at least two years.

(2) The approved supervisor shall not be a blood or legal relative or cohabitant of the licensure candidate, licensure candidate's peer, or someone who has acted as the licensure candidate's therapist within the past two years.

(3) The approved supervisor, prior to the commencement of any supervision, shall provide the licensure candidate a declaration, on a form provided by the department, that the supervisor has met the requirements of WAC 246-809-134 and qualifies as an approved supervisor.

(4) The approved supervisor shall have completed the following:

(a) A minimum of fifteen clock hours of training in clinical supervision obtained through:

(i) A supervision course; or

(ii) Continuing education credits on supervision; or

(iii) Supervision of supervision; or

(iv) Any combination of these; and

(b) Twenty-five hours of experience in supervision of clinical practice; or

(c) An American Association for Marriage and Family Therapy (AAMFT) approved supervisor is considered to have met the qualifications above.

(5) The approved supervisor shall attest to having thorough knowledge of the supervisee's practice activities including:

(a) Practice setting;

(b) Recordkeeping;

(c) Financial management;

(d) Ethics of clinical practice; and

(e) A backup plan for coverage.

(6) Applicants whose supervised postgraduate experience began prior to the effective date of these rules are exempt from the requirements of subsection (4) of this section.

[Statutory Authority: RCW 18.225.040 and [18.225.]090. 06-18-043, § 246-809-134, filed 8/30/06, effective 9/30/06.]

WAC 246-809-140 Examination. Examination required. Applicant must take and pass the Association of Marital and Family Therapy Regulatory Boards (AMFTRB) examination. The passing score on the examination shall be that established by the testing company in conjunction with the AMFTRB.

[Statutory Authority: 2001 c 251, RCW 43.70.250. 01-17-113, § 246-809-140, filed 8/22/01, effective 9/22/01.]

LICENSED MENTAL HEALTH COUNSELORS

WAC 246-809-210 Definitions. The following definitions apply to the licensure of mental health counselors.

(1) "Approved educational program" means any college or university accredited by an accreditation body recognized by the Council for Higher Education Accreditation (CHEA) or its successor, at the time the applicant completed the required education.

(2) "Approved setting" includes facilities, agencies or private practice where an applicant works with individuals, families, couples or groups under the supervision of an approved supervisor.

(3) "Approved supervisor" means a qualified licensed mental health counselor or equally qualified licensed mental health practitioner who has been licensed without restrictions for at least two years.

(4) "Equally qualified licensed mental health practitioner" means a licensed marriage and family therapist, licensed clinical social worker, licensed psychologist, licensed physician practicing as a psychiatrist, or licensed psychiatric nurse practitioner.

(5) "Group supervision" means face-to-face supervision with an approved supervisor, involving one supervisor and no more than six licensure candidates.

(6) "Immediate supervision" means a meeting with an approved supervisor, involving one supervisor and no more than two licensure candidates.

(7) "Licensure candidate" means an individual that is accruing supervised clinical experience required for licensure.

(8) "Supervision of supervision" means supervision by an approved supervisor for the purpose of training and qualifying a licensee to act as an approved supervisor for purposes of chapter 18.225 RCW and WAC 246-809-234.

(9) "Peer" means a co-worker who is not the licensure candidate's employer or supervisor.

[Statutory Authority: RCW 18.225.040 and [18.225.]090. 06-18-043, § 246-809-210, filed 8/30/06, effective 9/30/06.]

WAC 246-809-220 Education requirements. (1) To meet the education requirement imposed by section 9 (1)(b)(i), chapter 251, Laws of 2001, an applicant must possess a master's or doctoral degree in mental health counseling or a behavioral science master's or doctoral degree in a field relating to mental health counseling from an approved school. Fields recognized as relating to mental health counseling may include counseling, psychology, social work, nursing, education, pastoral counseling, rehabilitation counseling, or social sciences. Any field of study qualifying as related to mental health counseling must satisfy coursework equivalency requirements included in WAC 246-809-221. An official transcript must be provided as evidence of fulfillment of the coursework required.

(2) Any supplemental coursework required must be from an approved school.

(3) Applicants who held a behavioral science master's or doctoral degree and are completing supplemental coursework through an approved school to satisfy any missing program equivalencies may count any postgraduate experience hours acquired concurrently with the additional coursework.

(4) A person who is a Nationally Certified Counselor (NCC) or a Certified Clinical Mental Health Counselor (CCMHC) through the National Board of Certified Counselors (NBCC) is considered to have met the education requirements of this chapter. Verification must be sent directly to the department from NBCC.

[Statutory Authority: 2001 c 251, RCW 43.70.250. 01-17-113, § 246-809-220, filed 8/22/01, effective 9/22/01.]

WAC 246-809-221 Behavioral sciences—Program equivalency. Behavioral science in a field relating to mental health counseling includes a core of study relating to counseling theory and counseling philosophy. Either a counseling practicum, or a counseling internship, or both, must be included in the core of study. Exclusive use of an internship or practicum used for qualification must have incorporated supervised direct client contact. This core of study must include seven content areas from the entire list in subsections (1) through (17) of this section, five of which must be from content areas in subsections (1) through (8) of this subsection:

(1) Assessment/diagnosis.
(2) Ethics/law.
(3) Counseling individuals.
(4) Counseling groups.
(5) Counseling couples and families.
(6) Developmental psychology (may be child, adolescent, adult or life span).
(7) Psychopathology/abnormal psychology.
(8) Research and evaluation.
(9) Career development counseling.
(10) Multicultural concerns.
(11) Substance/chemical abuse.
(12) Physiological psychology.
(13) Organizational psychology.
(14) Mental health consultation.
(15) Developmentally disabled persons.
(16) Abusive relationships.
(17) Chronically mentally ill.

[Statutory Authority: 2001 c 251, RCW 43.70.250. 01-17-113, § 246-809-221, filed 8/22/01, effective 9/22/01.]

WAC 246-809-230 Supervised postgraduate experience. The experience requirements for the mental health applicant's practice area include successful completion of a supervised experience requirement. The experience requirement consists of a minimum of thirty-six months full-time counseling or three thousand hours of postgraduate mental health counseling under the supervision of a qualified licensed mental health counselor or equally qualified licensed mental health practitioner in an approved setting. The three thousand hours of required experience includes a minimum of one hundred hours spent in immediate supervision with the qualified licensed mental health counselor or equally qualified licensed mental health practitioner, and includes a minimum of one thousand two hundred hours of direct counseling with individuals, couples, families, or groups.

[Statutory Authority: RCW 18.225.040 and [18.225.]090. 06-18-043, § 246-809-230, filed 8/30/06, effective 9/30/06. Statutory Authority: 2001 c 251, RCW 43.70.250. 01-17-113, § 246-809-230, filed 8/22/01, effective 9/22/01.]

WAC 246-809-234 Approved supervisor. (1) The approved supervisor shall hold a license without restrictions that has been in good standing for at least two years.

(2) The approved supervisor shall not be a blood or legal relative or cohabitant of the licensure candidate, licensure candidate's peer, or someone who has acted as the licensure candidate's therapist within the past two years.

(3) The approved supervisor, prior to the commencement of any supervision, shall provide the licensure candidate a declaration, on a form provided by the department, that the supervisor has met the requirements of WAC 246-809-234 and qualifies as an approved supervisor.

(4) The approved supervisor shall have completed the following:

(a) A minimum of fifteen clock hours of training in clinical supervision obtained through:

(i) A supervision course; or

(ii) Continuing education credits on supervision; or

(iii) Supervision of supervision; and

(b) Twenty-five hours of experience in supervision of clinical practice.

(5) The approved supervisor shall have full knowledge of the licensure candidate's practice activities including:

(a) Recordkeeping;

(b) Financial management;

(c) Ethics of clinical practice; and

(d) The licensure candidate's backup plan for coverage in times when the licensure candidate is not available to their clients.

(6) Applicants whose supervised postgraduate experience began prior to the effective date of these rules are exempt from the requirements of subsection (4) of this section.

[Statutory Authority: RCW 18.225.040 and [18.225.]090. 06-18-043, § 246-809-234, filed 8/30/06, effective 9/30/06.]

WAC 246-809-240 Examination for licensed mental health counselors. (1) Applicants must pass an examination administered by the National Board of Certified Counselors (NBCC). Applicants who pass the National Certification Examination (NCE) or the National Clinical Mental Health Counselor Examination (NCMHCE), as administered by the NBCC, meet the examination requirements to be licensed as mental health counselors. Each applicant must cause the NBCC to send verification of the applicant's examination passage directly to the department of health before licensure can be granted.

(2) The department of health shall accept the passing score established by the NBCC for licensed mental health counselor examinations.

[Statutory Authority: RCW 18.225.040 and 18.225.090. 08-08-092, § 246-809-240, filed 4/1/08, effective 5/2/08. Statutory Authority: 2001 c 251, RCW 43.70.250. 01-17-113, § 246-809-240, filed 8/22/01, effective 9/22/01.]

LICENSED SOCIAL WORKERS

WAC 246-809-310 Definitions. The following definitions apply to the licensure of independent clinical and advanced social workers.

(1) "Approved educational program" means a master's or doctoral educational program in social work accredited by the Council on Social Work Education.

(2) "Approved supervisor" means a licensed independent clinical social worker (LICSW), licensed advanced social worker (LASW) (for LASWs only), or an equally qualified licensed mental health practitioner.

(3) "Equally qualified licensed mental health practitioner" means a licensed mental health counselor, licensed marriage and family therapist, licensed psychologist, licensed physician practicing as a psychiatrist, or licensed psychiatric nurse practitioner.

(4) "Group supervision" means face-to-face supervision with an approved supervisor, involving one supervisor and no more than six licensure candidates.

(5) "Licensure candidate" means an individual that is accruing supervised clinical experience required for licensure.

(6) "Nationally recognized standards" means the *Educational Policy and Accreditation Standards*, revised October 2004 published by the Council on Social Work Education revised October 2004 or any future revisions.

(7) "One-on-one supervision" means face-to-face supervision with an approved supervisor, involving one supervisor and one licensure candidate.

(8) "Supervision of supervision" means supervision by an approved supervisor for the purpose of training and qualifying a licensee to become an approved supervisor for purposes of chapter 18.225 RCW and WAC 246-809-334.

(9) "Peer" means a co-worker who is not the licensure candidate's employer or supervisor.

[Statutory Authority: RCW 18.225.040 and [18.225.]090. 06-18-043, § 246-809-310, filed 8/30/06, effective 9/30/06.]

WAC 246-809-320 Education requirements and supervised postgraduate experience. (1) The following are the education requirements for the social worker applicant's practice area:

(a) Licensed advanced social worker. Graduation from a master's or doctoral social work educational program accredited by the Council on Social Work Education and approved by the secretary based upon nationally recognized standards.

(b) Licensed independent clinical social worker. Graduation from a master's or doctorate level social work educational program accredited by the Council on Social Work Education and approved by the secretary based upon nationally recognized standards.

(2) The following are the supervised postgraduate experience requirements for the social worker applicant's practice area:

(a) Licensed advanced social worker. Successful completion of a supervised experience requirement. The experience requirement consists of a minimum of three thousand two hundred hours with ninety hours of supervision by a licensed independent clinical social worker or a licensed advanced social worker who has been licensed or certified for at least two years. Of those hours, fifty hours must include direct supervision by a licensed advanced social worker or licensed independent clinical social worker; the other forty hours may be with an equally qualified licensed mental health practitioner. Forty hours must be in one-to-one super-

vision and fifty hours may be in one-to-one supervision or group supervision. Distance supervision is limited to forty supervision hours. Eight hundred hours must be in direct client contact.

(b) Licensed independent clinical social worker. Successful completion of a supervised experience requirement. The experience requirement consists of a minimum of four thousand hours of experience, of which one thousand hours must be direct client contact, over a three-year period supervised by a licensed independent clinical social worker, with supervision of at least one hundred thirty hours by a licensed mental health practitioner. Of the total supervision, seventy hours must be with an independent clinical social worker; the other sixty hours may be with an equally qualified licensed mental health practitioner. Sixty hours must be in one-to-one supervision and seventy hours may be in one-to-one supervision or group supervision. Distance supervision is limited to sixty supervision hours.

[Statutory Authority: RCW 18.225.040 and [18.225.]090. 06-18-043, § 246-809-320, filed 8/30/06, effective 9/30/06. Statutory Authority: 2001 c 251, RCW 43.70.250. 01-17-113, § 246-809-320, filed 8/22/01, effective 9/22/01.]

WAC 246-809-321 Education and experience equivalency. (1)(a) Persons who obtained the Board Certified Diplomate in Clinical Social Work from the American Board of Examiners in Clinical Social Work (ABECSW) shall be considered to have met the education and postgraduate experience requirements to be eligible for Washington state licensure examination.

(b) Documentation of ABECSW Board Certified Diplomate in Clinical Social Work must be sent directly to the department from the ABECSW.

(2)(a) Persons who obtained the Diplomate in Clinical Social Work (DCSW) or Qualified Clinical Social Work (QCSW) from the National Association of Social Workers (NASW) shall be considered to have met the education and postgraduate experience requirements to be eligible for Washington state licensure examination.

(b) Documentation of DCSW or QCSW must be sent directly to the department from NASW.

[Statutory Authority: 2001 c 251, RCW 43.70.250. 01-17-113, § 246-809-321, filed 8/22/01, effective 9/22/01.]

WAC 246-809-334 Approved supervisor standards and responsibilities. (1) The approved supervisor must hold a license without restrictions that has been in good standing for at least two years.

(2) The approved supervisor shall not be a blood or legal relative or cohabitant of the licensure candidate, licensure candidate's peer, or someone who has acted as the licensure candidate's therapist within the past two years.

(3) The approved supervisor, prior to the commencement of any supervision, shall provide the licensure candidate a declaration, on a form provided by the department, that the supervisor has met the requirements of WAC 246-809-334 and qualifies as an approved supervisor.

(4) The approved supervisor shall have completed the following:

(a) A minimum of fifteen clock hours of training in clinical supervision obtained through:

(i) A supervision course; or

(ii) Continuing education credits on supervision; or

(iii) Supervision of supervision; and

(b) Twenty-five hours of experience in supervision of clinical practice; and

(c) Has had two years of clinical experience postlicensure (LASWs only) or five years of clinical experience postcertification or licensure (for LICSWs only).

(5) The approved supervisor shall attest to having thorough knowledge of the licensure candidate's practice activities including:

(a) Specific practice setting;

(b) Recordkeeping;

(c) Financial management;

(d) Ethics of clinical practice; and

(e) The licensure candidate's backup plan for coverage in times when he/she is not available to their clients.

(6) Licensure candidates whose supervised postgraduate experience began prior to the effective date of these rules are exempt from the requirements of subsection (4) of this section.

[Statutory Authority: RCW 18.225.040 and [18.225.]090. 06-18-043, § 246-809-334, filed 8/30/06, effective 9/30/06.]

WAC 246-809-340 Examination required. (1) Either the American Association of State Social Work Board's advanced or clinical examination is approved for use as the state examination for licensure of social workers.

(2) The passing score established by the testing company is the passing score accepted by the department of health.

[Statutory Authority: 2001 c 251, RCW 43.70.250. 01-17-113, § 246-809-340, filed 8/22/01, effective 9/22/01.]

CONTINUING EDUCATION

WAC 246-809-600 Who is required to have continuing education? (1) Licensed marriage and family therapists, licensed mental health counselors, and licensed social workers are required to have continuing education.

(2) The effective date for reporting the required continuing education shall begin with the 2004 renewal cycle.

[Statutory Authority: Chapter 18.19 RCW. 02-11-108, § 246-809-600, filed 5/20/02, effective 6/20/02.]

WAC 246-809-610 What courses are acceptable? The continuing education (CE) program or course must be relevant to licensed marriage and family therapists, licensed mental health counselors and licensed social workers and must contribute to the advancement, extension and enhancement of the professional competence of the licensed marriage and family therapist, licensed mental health counselor and/or licensed social worker. Courses or workshops primarily designed to increase practice income or office efficiency are not eligible for CE credit.

(1) Acceptable CE courses (including distance learning), seminars, workshops and postgraduate institutes are those which are:

(a) Programs having a featured instructor, speaker(s) or panel approved by an industry-recognized local, state, national, international organization or institution of higher learning; or

(b) Distance learning programs, approved by an industry-recognized local, state, national or international organization or institution of higher learning. These programs must require tests of comprehension upon completion. Distance learning programs are limited to twenty-six hours per reporting period.

(2) Training programs sponsored by the agency where a counselor is employed are acceptable if:

(a) The experience can be shown to contribute to the advancement, extension and enhancement of the professional competence of the licensed marriage and family therapist, licensed mental health counselor and/or the licensed social worker; and

(b) The training programs are limited to twenty-six hours per reporting period.

(3) Other learning experience, such as serving on a panel, board or council, community service, research, peer consultation, or publishing articles for professional publications are acceptable if:

(a) The experience can be shown to contribute to the advancement, extension and enhancement of the professional competence of the licensed marriage and family therapist, licensed mental health counselor and/or the licensed social worker; and

(b) The experience is limited to six hours per reporting period.

[Statutory Authority: RCW 18.225.040. 04-06-010, § 246-809-610, filed 2/20/04, effective 3/22/04. Statutory Authority: Chapter 18.19 RCW. 02-11-108, § 246-809-610, filed 5/20/02, effective 6/20/02.]

WAC 246-809-620 What are industry-recognized local, state, national, international organizations or institutions of higher learning? Recognized organizations or institutions include, but are not limited to, the following organizations:

(1) Washington Association for Marriage and Family Therapy;

(2) Washington State Society for Clinical Social Work;

(3) Washington Chapter of the National Association of Social Work;

(4) American Mental Health Counselors Association;

(5) American Association for Marriage and Family Therapy;

(6) Clinical Social Work Federation;

(7) National Association of Social Workers;

(8) Washington Mental Health Counselors Association;

(9) National Board for Certified Counselors;

(10) Society for Social Work Leadership in Health Care; or

(11) Institutions of higher learning that are accredited by a national or regional accrediting body recognized by the Commission on Recognition of Postsecondary Accreditation.

[Statutory Authority: RCW 18.225.040. 04-06-010, § 246-809-620, filed 2/20/04, effective 3/22/04. Statutory Authority: Chapter 18.19 RCW. 02-11-108, § 246-809-620, filed 5/20/02, effective 6/20/02.]

WAC 246-809-630 How many hours do I need and in what time period? Licensed marriage and family therapists, licensed mental health counselors and licensed social workers must complete thirty-six hours of continuing education every two years. At least six of the thirty-six hours must be in professional ethics and law, which may include topics under RCW 18.130.180.

[Statutory Authority: RCW 18.225.040. 04-06-010, § 246-809-630, filed 2/20/04, effective 3/22/04. Statutory Authority: Chapter 18.19 RCW. 02-11-108, § 246-809-630, filed 5/20/02, effective 6/20/02.]

WAC 246-809-640 How are credit hours determined for preparation and presentation of a lecture or an educational course? The license holder who prepares and presents lectures or education that contributes to the professional competence of a licensed counselor may accumulate the same number of hours obtained for continuing education purposes by attendees as required in WAC 246-12-220. The hours for presenting a specific topic lecture or education may only be used for continuing education credit once during each reporting period.

[Statutory Authority: Chapter 18.19 RCW. 02-11-108, § 246-809-640, filed 5/20/02, effective 6/20/02.]

WAC 246-809-650 How do I document my courses? Acceptable documentation shall include transcripts, letters from course instructors, certificate of completion, or other formal certification, as required in chapter 246-12 WAC, Part 7.

[Statutory Authority: Chapter 18.19 RCW. 02-11-108, § 246-809-650, filed 5/20/02, effective 6/20/02.]

WAC 246-809-700 Client disclosure information. Licensees must provide disclosure information to each client in accordance with chapter 18.225 RCW prior to implementation of a treatment plan. The disclosure information must be specific to the type of treatment service offered; in a language that can be easily understood by the client; and contain sufficient detail to enable the client to make an informed decision whether or not to accept treatment from the disclosing licensee.

Firms, agencies, or businesses having more than one licensee involved in a client's treatment, may provide disclosure information general to that agency. In these cases, the licensee would not be required to duplicate the information disclosed by the agency.

The disclosure information may be printed in a format of the licensee's choosing, but must include all required disclosure information per WAC 246-809-710.

[Statutory Authority: RCW 18.225.040. 04-06-011, § 246-809-700, filed 2/20/04, effective 3/22/04.]

WAC 246-809-710 Required disclosure information. (1) The following information shall be provided to each client at the commencement of any program of treatment:

(a) Name of firm, agency, business, or licensee's practice;

(b) Licensee's business address and telephone number;

(c) Washington state license number;

(d) The licensee's name;

(e) The methods or treatment modality and therapeutic orientation the licensee uses;

(f) The licensee's education, and training;

(g) The course of treatment, when known;

(h) Billing information, including:

(i) Client's cost per each treatment session; and

(ii) Billing practices, including any advance payments and refunds;

(i) Clients are to be informed that they as individuals have the right to refuse treatment and the right to choose a practitioner and treatment modality which best suits their needs;

(j) This subsection does not grant (clients) new rights and is not intended to supersede state or federal laws and regulations, or professional standards;

(k) The licensee must provide department of health contact information to the client so the client may obtain a list of or copy of the acts of unprofessional conduct listed under RCW 18.130.180. Department of health contact information must include the name, address, and telephone number for the health professions complaint process.

(2) Signatures are required of both the licensee providing the disclosure information and the client following a statement that the client had been provided a copy of the required disclosure information and the client has read and understands the information provided. The date of signature by each party is to be included at the time of signing.

[Statutory Authority: RCW 18.225.040. 04-06-011, § 246-809-710, filed 2/20/04, effective 3/22/04.]

WAC 246-809-720 Failure to provide client disclosure information. Failure to provide the client disclosure information required under WAC 246-809-700 and 246-809-710, and required under RCW 18.225.100, constitutes an act of unprofessional conduct as defined in RCW 18.130.180(7).

[Statutory Authority: RCW 18.225.040. 04-06-011, § 246-809-720, filed 2/20/04, effective 3/22/04.]

WAC 246-809-990 Licensed mental health counselors, marriage and family therapists, and social workers—Fees and renewal cycle. (1) Licenses must be renewed every year on the practitioner's birthday as provided in chapter 246-12 WAC, Part 2. The secretary may require payment of renewal fees less than those established in this section if the current level of fees is likely to result in a surplus of funds. Surplus funds are those in excess of the amount necessary to pay for the costs of administering the program and to maintain a reasonable reserve. Notice of any adjustment in the required payment will be provided to practitioners. The adjustment in the required payment shall remain in place for the duration of a renewal cycle to assure practitioners an equal benefit from the adjustment.

Title	Fee
(2) The following nonrefundable fees will be charged for licensed marriage and family therapist:	
Application	$150.00
Initial license	75.00
Renewal	140.00
Late renewal penalty	70.00
Expired license reissuance	85.00
Duplicate license	10.00
Certification of license	10.00
(3) The following nonrefundable fees will be charged for licensed mental health counselor:	
Application	125.00
Initial license	125.00
Renewal	75.00
Late renewal penalty	50.00
Expired license reissuance	65.00
Duplicate license	10.00
Certification of license	10.00
UW library access fee	25.00
(4) The following nonrefundable fees will be charged for licensed advanced social worker and licensed independent clinical social worker:	
Application	125.00
Initial license	125.00
Renewal	105.00
Late renewal penalty	52.50
Expired license reissuance	72.50
Duplicate license	10.00
Certification of license	10.00
UW library access fee	25.00

[Statutory Authority: RCW 43.70.110, 43.70.250 and 2008 c 329. 08-16-008, § 246-809-990, filed 7/24/08, effective 7/25/08. Statutory Authority: RCW 43.70.250, [43.70.]280 and 43.70.110. 05-12-012, § 246-809-990, filed 5/20/05, effective 7/1/05. Statutory Authority: 2001 c 251, RCW 43.70.250. 01-17-113, § 246-809-990, filed 8/22/01, effective 9/22/01.]

Chapter 246-810 WAC
COUNSELORS

WAC

COUNSELORS

246-810-010 Definitions.
246-810-030 Client disclosure information.
246-810-031 Required disclosure information.
246-810-032 Failure to provide client disclosure information.
246-810-035 Recordkeeping and retention.
246-810-040 Reporting of suspected abuse or neglect of a child, dependent adult, or a developmentally disabled person.
246-810-045 Fees paid in advance.
246-810-049 Sexual misconduct.
246-810-060 Mandatory reporting.
246-810-061 Health care institutions.
246-810-062 Counselor associations or societies.
246-810-063 Health care service contractors and disability insurance carriers.
246-810-064 Professional liability carriers.
246-810-065 Courts.
246-810-066 State and federal agencies.
246-810-080 AIDS prevention and information education requirements.

FEES

246-810-990 Counselors fees and renewal cycle.

DISPOSITION OF SECTIONS FORMERLY CODIFIED IN THIS CHAPTER

246-810-020 Expiration of registration or certification. [Statutory Authority: RCW 18.19.050(1). 97-17-113, § 246-810-020, filed 8/20/97, effective 9/20/97. Statutory Authority: RCW 43.70.250. 93-14-011, § 246-810-020, filed 6/24/93, effective 7/25/93. Statutory Authority: RCW 43.70.040. 91-02-049 (Order 121), recodified as § 246-810-020, filed 12/27/90, effective 1/31/91. Statutory Authority: 1987 c 512 § 10. 87-21-011 (Order PM 686), § 308-190-020, filed 10/9/87.] Repealed by 98-05-060, filed 2/13/98, effective 3/16/98. Statutory Authority: RCW 43.70.280.

246-810-022 Current address. [Statutory Authority: RCW 18.19.050 (1). 97-17-113, § 246-810-022, filed 8/20/97, effective 9/20/97.] Repealed by 98-05-060, filed 2/13/98, effective 3/16/98. Statutory Authority: RCW 43.70.280.

246-810-050 General provisions. [Statutory Authority: RCW 43.70.040. 91-02-049 (Order 121), recodified as § 246-810-050, filed 12/27/90, effective 1/31/91. Statutory Authority: RCW 18.130.070. 89-14-092 (Order PM 842), § 308-190-060, filed 6/30/89.] Repealed by 97-17-113, filed 8/20/97, effective 9/20/97. Statutory Authority: RCW 18.19.050(1).

246-810-070 Cooperation with investigation. [Statutory Authority: RCW 18.19.050(1). 97-17-113, § 246-810-070, filed 8/20/97, effective 9/20/97. Statutory Authority: RCW 43.70.040. 91-02-049 (Order 121), recodified as § 246-810-070, filed 12/27/90, effective 1/31/91. Statutory Authority: RCW 18.130.070. 89-14-092 (Order PM 842), § 308-190-140, filed 6/30/89.] Repealed by 06-08-106, filed 4/5/06, effective 5/6/06. Statutory Authority: RCW 18.19.050.

246-810-110 Definitions. [Statutory Authority: RCW 18.19.050(1). 97-17-113, § 246-810-110, filed 8/20/97, effective 9/20/97.] Repealed by 06-08-106, filed 4/5/06, effective 5/6/06. Statutory Authority: RCW 18.19.050.

246-810-120 Qualifications not met—Appeal. [Statutory Authority: RCW 18.19.050(1). 97-17-113, § 246-810-120, filed 8/20/97, effective 9/20/97.] Repealed by 06-08-106, filed 4/5/06, effective 5/6/06. Statutory Authority: RCW 18.19.050.

246-810-130 Expired credential. [Statutory Authority: RCW 43.70.-280. 98-05-060, § 246-810-130, filed 2/13/98, effective 3/16/98. Statutory Authority: RCW 18.19.050(1). 97-17-113, § 246-810-130, filed 8/20/97, effective 9/20/97.] Repealed by 06-08-106, filed 4/5/06, effective 5/6/06. Statutory Authority: RCW 18.19.050.

246-810-140 Temporary retirement. [Statutory Authority: RCW 18.19.050(1). 97-17-113, § 246-810-140, filed 8/20/97, effective 9/20/97.] Repealed by 06-08-106, filed 4/5/06, effective 5/6/06. Statutory Authority: RCW 18.19.050.

246-810-310 Definitions. [Statutory Authority: RCW 18.19.050(1). 97-17-113, § 246-810-310, filed 8/20/97, effective 9/20/97. Statutory Authority: RCW 43.70.040. 91-02-049 (Order 121), recodified as § 246-810-310, filed 12/27/90, effective 1/31/91. Statutory Authority: RCW 18.19.050. 89-04-003 (Order PM 817), § 308-220-010, filed 1/19/89; 88-11-079 (Order PM 729), § 308-220-010, filed 5/18/88.] Repealed by 06-08-106, filed 4/5/06, effective 5/6/06. Statutory Authority: RCW 18.19.050.

246-810-320 Education requirements—Degree equivalents. [Statutory Authority: RCW 18.19.050(1). 97-17-113, § 246-810-320, filed 8/20/97, effective 9/20/97. Statutory Authority: RCW 43.70.040. 91-02-049 (Order 121), recodified as § 246-810-320, filed 12/27/90, effective 1/31/91. Statutory Authority: RCW 18.19.050. 89-04-003 (Order PM 817), § 308-220-030, filed 1/19/89; 88-11-079 (Order PM 729), § 308-220-030, filed 5/18/88.] Repealed by 02-09-041, filed 4/12/02, effective 5/13/02. Statutory Authority: Chapter 18.19 RCW.

246-810-321 Program equivalency. [Statutory Authority: RCW 18.19.050(1). 97-17-113, § 246-810-321, filed 8/20/97, effective 9/20/97. Statutory Authority: RCW 43.70.-040. 91-02-049 (Order 121), recodified as § 246-810-321, filed 12/27/90, effective 1/31/91. Statutory Authority: RCW 18.19.050. 88-11-079 (Order PM 729), § 308-220-040, filed 5/18/88.] Repealed by 02-09-041, filed 4/12/02, effective 5/13/02. Statutory Authority: Chapter 18.19 RCW.

246-810-330 Supervision. [Statutory Authority: RCW 43.70.040. 91-02-049 (Order 121), recodified as § 246-810-330, filed 12/27/90, effective 1/31/91. Statutory Authority: RCW 18.19.050. 88-11-079 (Order PM 729), § 308-220-050, filed 5/18/88.] Repealed by 97-17-113, filed 8/20/97, effective 9/20/97. Statutory Authority: RCW 18.19.050 (1).

246-810-331 Supervisor qualifications. [Statutory Authority: RCW 43.70.040. 91-02-049 (Order 121), recodified as § 246-810-331, filed 12/27/90, effective 1/31/91. Statutory Authority: RCW 18.19.050. 88-11-079 (Order PM 729), § 308-220-060, filed 5/18/88.] Repealed by 97-17-113, filed 8/20/97, effective 9/20/97. Statutory Authority: RCW 18.19.050(1).

246-810-332 Supervised postgraduate experience. [Statutory Authority: RCW 18.19.050(1). 97-17-113, § 246-810-332, filed 8/20/97, effective 9/20/97. Statutory Authority: RCW 43.70.040. 91-02-049 (Order 121), recodified as § 246-810-332, filed 12/27/90, effective 1/31/91. Statutory Authority: RCW 18.19.050. 88-11-079 (Order PM 729), § 308-220-070, filed 5/18/88.] Repealed by 02-09-041, filed 4/12/02, effective 5/13/02. Statutory Authority: Chapter 18.19 RCW.

246-810-334 Approved supervisor—Qualifications. [Statutory Authority: RCW 18.19.050(1). 97-17-113, § 246-810-334, filed 8/20/97, effective 9/20/97.] Repealed by 06-08-106, filed 4/5/06, effective 5/6/06. Statutory Authority: RCW 18.19.050.

246-810-340 Examination. [Statutory Authority: RCW 18.19.050(1). 97-17-113, § 246-810-340, filed 8/20/97, effective 9/20/97. Statutory Authority: RCW 43.70.040. 91-02-049 (Order 121), recodified as § 246-810-340, filed 12/27/90, effective 1/31/91. Statutory Authority: RCW 18.19.050. 88-11-079 (Order PM 729), § 308-220-020, filed 5/18/88.] Repealed by 02-09-041, filed 4/12/02, effective 5/13/02. Statutory Authority: Chapter 18.19 RCW.

246-810-345 Examination appeal procedures. [Statutory Authority: RCW 18.19.050(1). 97-17-113, § 246-810-345, filed 8/20/97, effective 9/20/97.] Repealed by 06-08-106, filed 4/5/06, effective 5/6/06. Statutory Authority: RCW 18.19.050.

246-810-348 Certification of persons credentialed out-of-state. [Statutory Authority: RCW 18.19.050(1). 97-17-113, § 246-810-348, filed 8/20/97, effective 9/20/97.] Repealed by 06-08-106, filed 4/5/06, effective 5/6/06. Statutory Authority: RCW 18.19.050.

246-810-350 General provisions. [Statutory Authority: RCW 43.70.-040. 91-02-049 (Order 121), recodified as § 246-810-350, filed 12/27/90, effective 1/31/91. Statutory Authority: RCW 18.130.070. 89-14-092 (Order PM 842), § 308-220-090, filed 6/30/89.] Repealed by 97-17-113, filed 8/20/97, effective 9/20/97. Statutory Authority: RCW 18.19.050(1).

246-810-360 Mandatory reporting. [Statutory Authority: RCW 43.70.040. 91-02-049 (Order 121), recodified as § 246-810-360, filed 12/27/90, effective 1/31/91. Statutory Authority: RCW 18.130.070. 89-14-092 (Order PM 842), § 308-220-100, filed 6/30/89.] Repealed by 97-17-113, filed 8/20/97, effective 9/20/97. Statutory Authority: RCW 18.19.050(1).

246-810-361 Health care institutions. [Statutory Authority: RCW 43.70.040. 91-02-049 (Order 121), recodified as § 246-810-361, filed 12/27/90, effective 1/31/91. Statutory Authority: RCW 18.130.070. 89-14-092 (Order PM 842), § 308-220-110, filed 6/30/89.] Repealed by 97-17-113, filed 8/20/97, effective 9/20/97. Statutory Authority: RCW 18.19.050(1).

246-810-362 Marriage and family therapist associations or societies. [Statutory Authority: RCW 43.70.040. 91-02-049 (Order 121), recodified as § 246-810-362, filed 12/27/90, effective 1/31/91. Statutory Authority: RCW 18.130.070. 89-14-092 (Order PM 842), § 308-220-120, filed 6/30/89.] Repealed by 97-17-113, filed 8/20/97, effective 9/20/97. Statutory Authority: RCW 18.19.050 (1).

246-810-363 Health care service contractors and disability insurance carriers. [Statutory Authority: RCW 43.70.040. 91-02-049 (Order 121), recodified as § 246-810-363, filed 12/27/90, effective 1/31/91. Statutory Authority: RCW 18.130.070. 89-14-092 (Order PM 842), § 308-220-130, filed 6/30/89.] Repealed by 97-17-113, filed 8/20/97, effective 9/20/97. Statutory Authority: RCW 18.19.050 (1).

246-810-364 Professional liability carriers. [Statutory Authority: RCW 43.70.040. 91-02-049 (Order 121), recodified as § 246-810-364, filed 12/27/90, effective 1/31/91. Statutory Authority: RCW 18.130.070. 89-14-092 (Order PM 842), § 308-220-140, filed 6/30/89.] Repealed by 97-17-113, filed 8/20/97, effective 9/20/97. Statutory Authority: RCW 18.19.050(1).

246-810-365 Courts. [Statutory Authority: RCW 43.70.040. 91-02-049 (Order 121), recodified as § 246-810-365, filed 12/27/90, effective 1/31/91. Statutory Authority: RCW 18.130.070. 89-14-092 (Order PM 842), § 308-220-150, filed 6/30/89.] Repealed by 97-17-113, filed 8/20/97, effective 9/20/97. Statutory Authority: RCW 18.19.050(1).

246-810-366 State and federal agencies. [Statutory Authority: RCW 43.70.040. 91-02-049 (Order 121), recodified as § 246-810-366, filed 12/27/90, effective 1/31/91. Statutory Authority: RCW 18.130.070. 89-14-092 (Order PM 842), § 308-220-160, filed 6/30/89.] Repealed by 97-17-

113, filed 8/20/97, effective 9/20/97. Statutory Authority: RCW 18.19.050(1).

246-810-370 Cooperation with investigation. [Statutory Authority: RCW 43.70.040. 91-02-049 (Order 121), recodified as § 246-810-370, filed 12/27/90, effective 1/31/91. Statutory Authority: RCW 18.130.070. 89-14-092 (Order PM 842), § 308-220-170, filed 6/30/89.] Repealed by 97-17-113, filed 8/20/97, effective 9/20/97. Statutory Authority: RCW 18.19.050(1).

246-810-380 AIDS prevention and information education requirements. [Statutory Authority: RCW 43.70.040. 91-02-049 (Order 121), recodified as § 246-810-380, filed 12/27/90, effective 1/31/91. Statutory Authority: RCW 70.24.270. 88-22-077 (Order PM 786), § 308-220-200, filed 11/2/88.] Repealed by 97-17-113, filed 8/20/97, effective 9/20/97. Statutory Authority: RCW 18.19.050 (1).

246-810-510 Definitions. [Statutory Authority: RCW 18.19.050(1). 97-17-113, § 246-810-510, filed 8/20/97, effective 9/20/97. Statutory Authority: RCW 43.70.040. 91-02-049 (Order 121), recodified as § 246-810-510, filed 12/27/90, effective 1/31/91. Statutory Authority: RCW 18.19.120. 89-14-071 (Order PM 841), § 308-210-010, filed 6/30/89. Statutory Authority: RCW 18.19.050. 88-11-025 (Order PM 730), § 308-210-010, filed 5/11/88.] Repealed by 06-08-106, filed 4/5/06, effective 5/6/06. Statutory Authority: RCW 18.19.050.

246-810-520 Education requirements. [Statutory Authority: RCW 18.19.050(1). 97-17-113, § 246-810-520, filed 8/20/97, effective 9/20/97. Statutory Authority: RCW 43.70.-040. 91-02-049 (Order 121), recodified as § 246-810-520, filed 12/27/90, effective 1/31/91. Statutory Authority: RCW 18.19.050. 88-11-025 (Order PM 730), § 308-210-020, filed 5/11/88.] Repealed by 02-09-041, filed 4/12/02, effective 5/13/02. Statutory Authority: Chapter 18.19 RCW.

246-810-521 Behavioral sciences—Program equivalency. [Statutory Authority: RCW 18.19.050(1). 97-17-113, § 246-810-521, filed 8/20/97, effective 9/20/97. Statutory Authority: RCW 43.70.040. 91-02-049 (Order 121), recodified as § 246-810-521, filed 12/27/90, effective 1/31/91. Statutory Authority: RCW 18.19.120. 89-14-071 (Order PM 841), § 308-210-050, filed 6/30/89. Statutory Authority: RCW 18.19.050. 88-11-025 (Order PM 730), § 308-210-050, filed 5/11/88.] Repealed by 02-09-041, filed 4/12/02, effective 5/13/02. Statutory Authority: Chapter 18.19 RCW.

246-810-530 Mental health counselors—Professional experience requirement prior to examination for certification. [Statutory Authority: RCW 43.70.040. 91-02-049 (Order 121), recodified as § 246-810-530, filed 12/27/90, effective 1/31/91. Statutory Authority: RCW 18.19.120. 89-14-071 (Order PM 841), § 308-210-045, filed 6/30/89.] Repealed by 97-17-113, filed 8/20/97, effective 9/20/97. Statutory Authority: RCW 18.19.050(1).

246-810-532 Supervised postgraduate experience. [Statutory Authority: RCW 18.19.050(1). 97-17-113, § 246-810-532, filed 8/20/97, effective 9/20/97.] Repealed by 02-09-041, filed 4/12/02, effective 5/13/02. Statutory Authority: Chapter 18.19 RCW.

246-810-534 Approved supervisor—Qualifications. [Statutory Authority: RCW 18.19.050(1). 97-17-113, § 246-810-534, filed 8/20/97, effective 9/20/97.] Repealed by 06-08-106, filed 4/5/06, effective 5/6/06. Statutory Authority: RCW 18.19.050.

246-810-540 Examination for certified mental health counselors. [Statutory Authority: RCW 18.19.050(1). 97-17-113, § 246-810-540, filed 8/20/97, effective 9/20/97. Statutory Authority: RCW 43.70.040. 91-02-049 (Order 121), recodified as § 246-810-540, filed 12/27/90, effective 1/31/91. Statutory Authority: RCW 18.19.120. 89-14-071 (Order PM 841), § 308-210-040, filed 6/30/89. Statutory Authority: RCW 18.19.050. 88-11-025 (Order PM 730), § 308-210-040, filed 5/11/88.] Repealed by 02-09-041, filed 4/12/02, effective 5/13/02. Statutory Authority: Chapter 18.19 RCW.

246-810-541 Applicants with graduate degree by January 26, 1989. [Statutory Authority: RCW 43.70.040. 91-02-049 (Order 121), recodified as § 246-810-541, filed 12/27/90, effective 1/31/91. Statutory Authority: RCW 18.19.120. 89-14-071 (Order PM 841), § 308-210-046, filed 6/30/89.] Repealed by 97-17-113, filed 8/20/97, effective 9/20/97. Statutory Authority: RCW 18.19.050 (1).

246-810-542 Examination waiver eligibility. [Statutory Authority: RCW 43.70.040. 91-02-049 (Order 121), recodified as § 246-810-542, filed 12/27/90, effective 1/31/91. Statutory Authority: RCW 18.19.120. 89-14-071 (Order PM 841), § 308-210-030, filed 6/30/89. Statutory Authority: RCW 18.19.050. 88-11-025 (Order PM 730), § 308-210-030, filed 5/11/88.] Repealed by 97-17-113, filed 8/20/97, effective 9/20/97. Statutory Authority: RCW 18.19.050(1).

246-810-545 Examination appeal procedures. [Statutory Authority: RCW 18.19.050(1). 97-17-113, § 246-810-545, filed 8/20/97, effective 9/20/97.] Repealed by 06-08-106, filed 4/5/06, effective 5/6/06. Statutory Authority: RCW 18.19.050.

246-810-548 Certification of persons credentialed out-of-state. [Statutory Authority: RCW 18.19.050(1). 97-17-113, § 246-810-548, filed 8/20/97, effective 9/20/97.] Repealed by 06-08-106, filed 4/5/06, effective 5/6/06. Statutory Authority: RCW 18.19.050.

246-810-550 General provisions. [Statutory Authority: RCW 43.70.-040. 91-02-049 (Order 121), recodified as § 246-810-550, filed 12/27/90, effective 1/31/91. Statutory Authority: RCW 18.130.070. 89-14-092 (Order PM 842), § 308-210-080, filed 6/30/89.] Repealed by 97-17-113, filed 8/20/97, effective 9/20/97. Statutory Authority: RCW 18.19.050(1).

246-810-560 Mandatory reporting. [Statutory Authority: RCW 43.70.040. 91-02-049 (Order 121), recodified as § 246-810-560, filed 12/27/90, effective 1/31/91. Statutory Authority: RCW 18.130.070. 89-14-092 (Order PM 842), § 308-210-090, filed 6/30/89.] Repealed by 97-17-113, filed 8/20/97, effective 9/20/97. Statutory Authority: RCW 18.19.050(1).

246-810-561 Health care institutions. [Statutory Authority: RCW 43.70.040. 91-02-049 (Order 121), recodified as § 246-810-561, filed 12/27/90, effective 1/31/91. Statutory Authority: RCW 18.130.070. 89-14-092 (Order PM 842), § 308-210-100, filed 6/30/89.] Repealed by 97-17-113, filed 8/20/97, effective 9/20/97. Statutory Authority: RCW 18.19.050(1).

246-810-562 Mental health counselor associations or societies. [Statutory Authority: RCW 43.70.040. 91-02-049 (Order 121), recodified as § 246-810-562, filed 12/27/90, effective 1/31/91. Statutory Authority: RCW 18.130.070. 89-14-092 (Order PM 842), § 308-210-110, filed 6/30/89.] Repealed by 97-17-113, filed 8/20/97, effective 9/20/97. Statutory Authority: RCW 18.19.050(1).

246-810-563 Health care service contractors and disability insurance carriers. [Statutory Authority: RCW 43.70.040. 91-02-049 (Order 121), recodified as § 246-810-563, filed 12/27/90, effective 1/31/91. Statutory Authority: RCW 18.130.070. 89-14-092 (Order PM 842), § 308-210-120, filed 6/30/89.] Repealed by 97-17-113, filed 8/20/97, effective 9/20/97. Statutory Authority: RCW 18.19.050 (1).

246-810-564 Professional liability carriers. [Statutory Authority: RCW 43.70.040. 91-02-049 (Order 121), recodified as § 246-810-564, filed 12/27/90, effective 1/31/91. Statutory Authority: RCW 18.130.070. 89-14-092 (Order PM 842), § 308-210-130, filed 6/30/89.] Repealed by 97-17-113, filed 8/20/97, effective 9/20/97. Statutory Authority: RCW 18.19.050(1).

246-810-565 Courts. [Statutory Authority: RCW 43.70.040. 91-02-049 (Order 121), recodified as § 246-810-565, filed 12/27/90, effective 1/31/91. Statutory Authority: RCW 18.130.070. 89-14-092 (Order PM 842), § 308-210-140, filed 6/30/89.] Repealed by 97-17-113, filed 8/20/97, effective 9/20/97. Statutory Authority: RCW 18.19.050(1).

246-810-566 State and federal agencies. [Statutory Authority: RCW 43.70.040. 91-02-049 (Order 121), recodified as § 246-810-566, filed 12/27/90, effective 1/31/91. Statutory Authority: RCW 18.130.070. 89-14-092 (Order PM 842), § 308-210-150, filed 6/30/89.] Repealed by 97-17-113, filed 8/20/97, effective 9/20/97. Statutory Authority: RCW 18.19.050(1).

246-810-570 Cooperation with investigation. [Statutory Authority: RCW 43.70.040. 91-02-049 (Order 121), recodified as § 246-810-570, filed 12/27/90, effective 1/31/91. Statutory Authority: RCW 18.130.070. 89-14-092 (Order PM 842), § 308-210-160, filed 6/30/89.] Repealed by 97-17-113, filed 8/20/97, effective 9/20/97. Statutory Authority: RCW 18.19.050(1).

246-810-580 AIDS prevention and information education requirements. [Statutory Authority: RCW 43.70.040. 91-02-049 (Order 121), recodified as § 246-810-580, filed 12/27/90, effective 1/31/91. Statutory Authority: RCW 70.24.270. 88-22-077 (Order PM 786), § 308-210-200, filed 11/2/88.] Repealed by 97-17-113, filed 8/20/97, effective 9/20/97. Statutory Authority: RCW 18.19.050 (1).

246-810-600 Who is required to have continuing education? [Statutory Authority: RCW 18.19.170. 00-03-075A, § 246-810-600, filed 1/19/00, effective 2/19/00.] Repealed by 02-11-108, filed 5/20/02, effective 6/20/02. Statutory Authority: Chapter 18.19 RCW. Later promulgation, see WAC 246-809-600.

246-810-610 What courses are acceptable? [Statutory Authority: RCW 18.19.170. 00-03-075A, § 246-810-610, filed 1/19/00, effective 2/19/00.] Repealed by 02-11-108, filed 5/20/02, effective 6/20/02. Statutory Authority: Chapter 18.19 RCW. Later promulgation, see WAC 246-809-610.

246-810-620 What are industry-recognized local, state, national, international organizations or institutions of higher learning? [Statutory Authority: RCW 18.19.170. 00-03-075A, § 246-810-620, filed 1/19/00, effective 2/19/00.] Repealed by 02-11-108, filed 5/20/02, effective 6/20/02. Statutory Authority: Chapter 18.19 RCW. Later promulgation, see WAC 246-809-620.

246-810-630 How many hours do I need and in what time period? [Statutory Authority: RCW 18.19.170. 00-03-075A, § 246-810-630, filed 1/19/00, effective 2/19/00.] Repealed by 02-11-108, filed 5/20/02, effective 6/20/02. Statutory Authority: Chapter 18.19 RCW. Later promulgation, see WAC 246-809-630.

246-810-640 How are credit hours determined for preparation and presentation of a lecture or an educational course? [Statutory Authority: RCW 18.19.170. 00-03-075A, § 246-810-640, filed 1/19/00, effective 2/19/00.] Repealed by 02-11-108, filed 5/20/02, effective 6/20/02. Statutory Authority: Chapter 18.19 RCW. Later promulgation, see WAC 246-809-640.

246-810-650 How do I document my courses? [Statutory Authority: RCW 18.19.170. 00-03-075A, § 246-810-650, filed 1/19/00, effective 2/19/00.] Repealed by 02-11-108, filed 5/20/02, effective 6/20/02. Statutory Authority: Chapter 18.19 RCW. Later promulgation, see WAC 246-809-650.

246-810-660 What are the continuing education requirements for returning to active status from a temporary retirement status? [Statutory Authority: RCW 18.19.170. 00-03-075A, § 246-810-660, filed 1/19/00, effective 2/19/00.] Repealed by 02-11-108, filed 5/20/02, effective 6/20/02. Statutory Authority: Chapter 18.19 RCW.

246-810-710 Definitions. [Statutory Authority: RCW 18.19.050(1). 97-17-113, § 246-810-710, filed 8/20/97, effective 9/20/97.] Repealed by 06-08-106, filed 4/5/06, effective 5/6/06. Statutory Authority: RCW 18.19.050.

246-810-720 Education requirements. [Statutory Authority: RCW 18.19.050(1). 97-17-113, § 246-810-720, filed 8/20/97, effective 9/20/97. Statutory Authority: RCW 43.70.-040. 91-02-049 (Order 121), recodified as § 246-810-720, filed 12/27/90, effective 1/31/91. Statutory Authority: RCW 18.19.050. 88-11-078 (Order PM 727), § 308-230-010, filed 5/18/88.] Repealed by 02-09-041, filed 4/12/02, effective 5/13/02. Statutory Authority: Chapter 18.19 RCW.

246-810-721 Education and experience equivalency. [Statutory Authority: RCW 18.19.050(1). 97-17-113, § 246-810-721, filed 8/20/97, effective 9/20/97.] Repealed by 02-09-041, filed 4/12/02, effective 5/13/02. Statutory Authority: Chapter 18.19 RCW.

246-810-730 Supervision requirements. [Statutory Authority: RCW 43.70.040. 91-02-049 (Order 121), recodified as § 246-810-730, filed 12/27/90, effective 1/31/91. Statutory Authority: RCW 18.19.050. 88-11-078 (Order PM 727), § 308-230-040, filed 5/18/88.] Repealed by 97-17-113, filed 8/20/97, effective 9/20/97. Statutory Authority: RCW 18.19.050(1).

246-810-731 Education and supervision equivalency. [Statutory Authority: RCW 43.70.040. 91-02-049 (Order 121), recodified as § 246-810-731, filed 12/27/90, effective 1/31/91. Statutory Authority: RCW 18.19.050. 88-11-078 (Order PM 727), § 308-230-030, filed 5/18/88.] Repealed by 97-17-113, filed 8/20/97, effective 9/20/97. Statutory Authority: RCW 18.19.050(1).

246-810-732 Supervised postgraduate experience. [Statutory Authority: RCW 18.19.050(1). 97-17-113, § 246-810-732, filed 8/20/97, effective 9/20/97.] Repealed by 02-09-041, filed 4/12/02, effective 5/13/02. Statutory Authority: Chapter 18.19 RCW.

246-810-734 Approved supervisor—Qualifications. [Statutory Authority: RCW 18.19.050(1). 97-17-113, § 246-810-734, filed 8/20/97, effective 9/20/97.] Repealed by 06-08-106, filed 4/5/06, effective 5/6/06. Statutory Authority: RCW 18.19.050.

246-810-740 Examination required. [Statutory Authority: RCW 18.19.050(1). 97-17-113, § 246-810-740, filed 8/20/97, effective 9/20/97. Statutory Authority: RCW 43.70.-040. 91-02-049 (Order 121), recodified as § 246-810-740, filed 12/27/90, effective 1/31/91. Statutory Authority: RCW 18.19.050. 88-11-078 (Order PM 727), § 308-230-020, filed 5/18/88.] Repealed by 02-09-041, filed 4/12/02, effective 5/13/02. Statutory Authority: Chapter 18.19 RCW.

246-810-741 Certification of persons credentialed out-of-state. [Statutory Authority: RCW 43.70.040. 91-02-049 (Order 121), recodified as § 246-810-741, filed 12/27/90, effective 1/31/91. Statutory Authority: RCW 18.19.050. 88-11-078 (Order PM 727), § 308-230-050, filed 5/18/88.] Repealed by 97-17-113, filed 8/20/97, effective 9/20/97. Statutory Authority: RCW 18.19.050(1).

246-810-745 Examination appeal procedures. [Statutory Authority: RCW 18.19.050(1). 97-17-113, § 246-810-745, filed 8/20/97, effective 9/20/97.] Repealed by 06-08-106, filed 4/5/06, effective 5/6/06. Statutory Authority: RCW 18.19.050.

246-810-748 Certification of persons credentialed out-of-state. [Statutory Authority: RCW 18.19.050(1). 97-17-113, § 246-810-748, filed 8/20/97, effective 9/20/97.] Repealed by 06-08-106, filed 4/5/06, effective 5/6/06. Statutory Authority: RCW 18.19.050.

246-810-750 General provisions. [Statutory Authority: RCW 43.70.040. 91-02-049 (Order 121), recodified as § 246-810-750, filed 12/27/90, effective 1/31/91. Statutory Authority: RCW 18.130.070. 89-14-092 (Order PM 842), § 308-230-060, filed 6/30/89.] Repealed by 97-17-113, filed 8/20/97, effective 9/20/97. Statutory Authority: RCW 18.19.050(1).

246-810-760 Mandatory reporting. [Statutory Authority: RCW 43.70.040. 91-02-049 (Order 121), recodified as § 246-810-760, filed 12/27/90, effective 1/31/91. Statutory Authority: RCW 18.130.070. 89-14-092 (Order PM 842), § 308-230-070, filed 6/30/89.] Repealed by 97-17-113, filed 8/20/97, effective 9/20/97. Statutory Authority: RCW 18.19.050(1).

246-810-761 Health care institutions. [Statutory Authority: RCW 43.70.040. 91-02-049 (Order 121), recodified as § 246-810-761, filed 12/27/90, effective 1/31/91. Statutory Authority: RCW 18.130.070. 89-14-092 (Order PM 842), § 308-230-080, filed 6/30/89.] Repealed by 97-17-113, filed 8/20/97, effective 9/20/97. Statutory Authority: RCW 18.19.050(1).

246-810-762 Social worker associations or societies. [Statutory Authority: RCW 43.70.040. 91-02-049 (Order 121), recodified as § 246-810-762, filed 12/27/90, effective 1/31/91. Statutory Authority: RCW 18.130.070. 89-14-092 (Order PM 842), § 308-230-090, filed 6/30/89.] Repealed by 97-17-113, filed 8/20/97, effective 9/20/97. Statutory Authority: RCW 18.19.050(1).

246-810-763 Health care service contractors and disability insurance carriers. [Statutory Authority: RCW 43.70.040. 91-02-049 (Order 121), recodified as § 246-810-763, filed 12/27/90, effective 1/31/91. Statutory Authority: RCW 18.130.070. 89-14-092 (Order PM 842), § 308-230-100, filed 6/30/89.] Repealed by 97-17-113, filed 8/20/97, effective 9/20/97. Statutory Authority: RCW 18.19.050(1).

246-810-764 Professional liability carriers. [Statutory Authority: RCW 43.70.040. 91-02-049 (Order 121), recodified as § 246-810-764, filed 12/27/90, effective 1/31/91. Statutory Authority: RCW 18.130.070. 89-14-092 (Order PM 842), § 308-230-110, filed 6/30/89.] Repealed by 97-17-113, filed 8/20/97, effective 9/20/97. Statutory Authority: RCW 18.19.050(1).

246-810-765 Courts. [Statutory Authority: RCW 43.70.040. 91-02-049 (Order 121), recodified as § 246-810-765, filed 12/27/90, effective 1/31/91. Statutory Authority: RCW 18.130.070. 89-14-092 (Order PM 842), § 308-230-120, filed 6/30/89.] Repealed by 97-17-113, filed 8/20/97,

effective 9/20/97. Statutory Authority: RCW 18.19.050 (1).

246-810-766 State and federal agencies. [Statutory Authority: RCW 43.70.040. 91-02-049 (Order 121), recodified as § 246-810-766, filed 12/27/90, effective 1/31/91. Statutory Authority: RCW 18.130.070. 89-14-092 (Order PM 842), § 308-230-130, filed 6/30/89.] Repealed by 97-17-113, filed 8/20/97, effective 9/20/97. Statutory Authority: RCW 18.19.050(1).

246-810-770 Cooperation with investigation. [Statutory Authority: RCW 43.70.040. 91-02-049 (Order 121), recodified as § 246-810-770, filed 12/27/90, effective 1/31/91. Statutory Authority: RCW 18.130.070. 89-14-092 (Order PM 842), § 308-230-140, filed 6/30/89.] Repealed by 97-17-113, filed 8/20/97, effective 9/20/97. Statutory Authority: RCW 18.19.050(1).

246-810-780 AIDS prevention and information education requirements. [Statutory Authority: RCW 43.70.040. 91-02-049 (Order 121), recodified as § 246-810-780, filed 12/27/90, effective 1/31/91. Statutory Authority: RCW 70.24.270. 88-22-077 (Order PM 786), § 308-230-200, filed 11/2/88.] Repealed by 97-17-113, filed 8/20/97, effective 9/20/97. Statutory Authority: RCW 18.19.050(1).

COUNSELORS

WAC 246-810-010 Definitions. The following terms are defined within the meaning of this chapter.

(1) "Counselor" means and includes any registered counselor or registered hypnotherapist regulated under chapter 18.19 RCW.

(2) "Department" means the Washington state department of health.

(3) "Fee" as referred to in RCW 18.19.030 means compensation received by the counselor for counseling services provided, regardless of the source.

(4) "Hospital" means any health care institution licensed under chapter 70.41 RCW.

(5) "Nursing home" means any health care institution licensed under chapter 18.51 RCW.

(6) "Unprofessional conduct" as used in this chapter means the conduct described in RCW 18.130.180.

[Statutory Authority: RCW 18.19.050. 06-08-106, § 246-810-010, filed 4/5/06, effective 5/6/06. Statutory Authority: RCW 18.19.050(1). 97-17-113, § 246-810-010, filed 8/20/97, effective 9/20/97. Statutory Authority: RCW 43.70.040. 91-02-049 (Order 121), recodified as § 246-810-010, filed 12/27/90, effective 1/31/91. Statutory Authority: RCW 18.19.060. 89-14-070 (Order PM 840), § 308-190-030, filed 6/30/89. Statutory Authority: RCW 18.19.050. 88-11-024 (Order PM 728), § 308-190-030, filed 5/11/88.]

WAC 246-810-030 Client disclosure information. Counselors must provide disclosure information to each client in accordance with chapter 18.19 RCW prior to implementation of a treatment plan. The disclosure information must be specific to the type of counseling service offered; in language that can be easily understood by the client; and contain sufficient detail to enable the client to make an informed decision whether or not to accept treatment from the disclosing counselor.

Firms, agencies, or businesses having more than one counselor involved in a client's treatment, may provide disclosure information general to that agency. In these cases, the counselor would not be required to duplicate the information disclosed by the agency.

The disclosure information may be printed in a format of the counselor's choosing, but must include all required disclosure information per WAC 246-810-031.

[Statutory Authority: RCW 18.19.050(1). 97-17-113, § 246-810-030, filed 8/20/97, effective 9/20/97. Statutory Authority: RCW 43.70.040. 91-02-049 (Order 121), recodified as § 246-810-030, filed 12/27/90, effective 1/31/91. Statutory Authority: RCW 18.19.060. 89-14-070 (Order PM 840), § 308-190-040, filed 6/30/89. Statutory Authority: RCW 18.19.050. 88-11-024 (Order PM 728), § 308-190-040, filed 5/11/88.]

WAC 246-810-031 Required disclosure information. (1) The counselor must provide the following information to each counseling client:

(a) Name of firm, agency, business, or counselor's practice.

(b) Counselor's business address and telephone number.

(c) Washington state registration number.

(d) The counselor's name and type of counseling they provide.

(e) The methods or techniques the counselor uses.

(f) The counselor's education, training, and experience.

(g) The course of treatment where known.

(h) Billing information, including:

(i) Client's cost per each counseling session;

(ii) Billing practices, including any advance payments and refunds.

(2) Disclosure statement. The counselor must provide a disclosure statement to each client. The following language must appear on every client's disclosure statement:

"Counselors practicing counseling for a fee must be registered with the department of health for the protection of the public health and safety. Registration of an individual with the department does not include a recognition of any practice standards, nor necessarily implies the effectiveness of any treatment." In addition to the disclosure statement, the counselor must:

(a) Inform clients about the purpose of the Counselor Credentialing Act, chapter 18.19 RCW. The purpose of the law regulating counselors is: (i) To provide protection for public health and safety; and (ii) to empower the citizens of the state of Washington by providing a complaint process against those counselors who would commit acts of unprofessional conduct.

(b) Inform clients they have the right to choose counselors who best suit their needs and purposes. (This subsection does not provide new rights or supersede existing law.)

(c) Inform clients of the limits of confidentiality under RCW 18.19.180.

(d) Provide clients with a list of or copy of the acts of unprofessional conduct in RCW 18.130.180 and the name, address, and contact telephone within the department of health.

(3) Upon providing the required disclosure information to the client, the counselor and client must sign and date a statement that:

(a) The counselor has provided the client with a copy of the required disclosure information; and

(b) The client has read and understands the information. The date of signature by each party is to be included at the time of signing.

(4) The department of health publishes an informational brochure to educate and assist the public in understanding counselor responsibilities and client rights and responsibilities. The counselor may photocopy and provide the brochure to each client in conjunction with the disclosure information

required in this section. The counselor may not rely solely on the brochure published by the department to meet the requirements of this section.

[Statutory Authority: RCW 18.19.050. 06-08-106, § 246-810-031, filed 4/5/06, effective 5/6/06. Statutory Authority: RCW 18.19.050(1). 97-17-113, § 246-810-031, filed 8/20/97, effective 9/20/97. Statutory Authority: RCW 43.70.040. 91-02-049 (Order 121), recodified as § 246-810-031, filed 12/27/90, effective 1/31/91. Statutory Authority: RCW 18.19.060. 89-14-070 (Order PM 840), § 308-190-041, filed 6/30/89.]

WAC 246-810-032 Failure to provide client disclosure information. Failure to provide to the client any of the disclosure information as set forth in WAC 246-810-030 and 246-810-031, and as required by the law shall constitute an act of unprofessional conduct as defined in RCW 18.130.180 (7).

[Statutory Authority: RCW 18.19.050(1). 97-17-113, § 246-810-032, filed 8/20/97, effective 9/20/97. Statutory Authority: RCW 43.70.040. 91-02-049 (Order 121), recodified as § 246-810-032, filed 12/27/90, effective 1/31/91. Statutory Authority: RCW 18.19.050. 88-11-024 (Order PM 728), § 308-190-050, filed 5/11/88.]

WAC 246-810-035 Recordkeeping and retention. (1) The counselor providing professional services to a client or providing services billed to a third-party payor, shall document services, except as provided in subsection (2) of this section. The documentation shall include:

(a) Client name;

(b) The fee arrangement and record of payments;

(c) Dates counseling was received;

(d) Disclosure form, signed by counselor and client;

(e) The presenting problem(s), purpose or diagnosis;

(f) Notation and results of formal consults, including information obtained from other persons or agencies through a release of information;

(g) Progress notes sufficient to support responsible clinical practice for the type of theoretical orientation/therapy the counselor uses.

(2) If a client requests that no treatment records be kept, and the counselor agrees to the request, the request must be in writing and only the following must be retained:

(a) Client name;

(b) Fee arrangement and record of payments;

(c) Dates counseling was received;

(d) Disclosure form, signed by counselor and client;

(e) Written request that no records be kept.

(3) The counselor must not agree to the request if maintaining records is required by other state or federal law.

(4) All records must be kept for a period of five years following the last visit. Within this five-year period, all records must be maintained safely, with properly limited access.

Special provisions must be made for the retention or transferal of active or inactive records from clients last seen inside of five years; and for continuity of services in the event of a counselor going out of business, death or incapacitation. Such special provisions may be made in a will or by having another counselor review records with a client and recommend a course of action; or other appropriate means as determined by the counselor.

[Statutory Authority: RCW 18.19.050(1). 97-17-113, § 246-810-035, filed 8/20/97, effective 9/20/97.]

WAC 246-810-040 Reporting of suspected abuse or neglect of a child, dependent adult, or a developmentally disabled person. As required by chapter 26.44 RCW, all counselors must report abuse or neglect of a child, dependent adult, or developmentally disabled person when they have reasonable cause to believe that such an incident has occurred.

The report shall be made to the local law enforcement agency or to the department of social and health services at the first opportunity, but no longer than forty-eight hours after there is reasonable cause to believe that the child or adult has suffered abuse or neglect.

[Statutory Authority: RCW 18.19.050(1). 97-17-113, § 246-810-040, filed 8/20/97, effective 9/20/97. Statutory Authority: RCW 43.70.040. 91-02-049 (Order 121), recodified as § 246-810-040, filed 12/27/90, effective 1/31/91. Statutory Authority: RCW 18.19.060. 89-14-070 (Order PM 840), § 308-190-042, filed 6/30/89.]

WAC 246-810-045 Fees paid in advance. (1) Any practice of collecting fees in advance, as well as refund policies, must be disclosed in accordance with WAC 246-810-031 to the client before any funds are collected.

(2) Counselors who collect fees in advance of the service provided must separate such funds from operating/expense funds. Failure to properly account for such funds may be a violation of the Securities Act, RCW 21.20.005. These fees may not be expended by the counselor until such time as the service is provided. Any funds left in the account, for which services were not rendered, must be returned to the client within thirty days of the request by the client for return of the funds.

(3) Room rental fees or similar expenses (i.e., as relates to group therapy), are not considered fees paid in advance.

[Statutory Authority: RCW 18.19.050(1). 97-17-113, § 246-810-045, filed 8/20/97, effective 9/20/97.]

WAC 246-810-049 Sexual misconduct. (1) The definitions and prohibitions on sexual misconduct described in chapter 246-16 WAC apply to counselors except WAC 246-16-100 (3) and (4).

(2) A counselor shall never engage, or attempt to engage, in the activities listed in WAC 246-16-100(1) with a former patient, former client or former key party.

[Statutory Authority: RCW 18.155.040, 18.19.050, 18.225.040, 18.205.060, 18.130.050. 08-07-090, § 246-810-049, filed 3/19/08, effective 4/19/08. Statutory Authority: RCW 18.19.050(1). 97-17-113, § 246-810-049, filed 8/20/97, effective 9/20/97.]

WAC 246-810-060 Mandatory reporting. (1) All reports required by this chapter shall be submitted to the department as soon as possible, but no later than twenty days after a determination is made.

(2) Reports made in accordance with WAC 246-810-061, 246-810-062, 246-810-063, and 246-810-064 should contain the following information if known:

(a) The name, address, and telephone number of the person making the report.

(b) The name, address and telephone number of the counselors being reported.

(c) The case number of any client or patient whose treatment is a subject of the report.

(d) A brief description or summary of the facts which gave rise to the issuance of the report, including dates of occurrences.

(e) If court action is involved, the name of the court in which the action is filed along with the date of filing and docket number.

(f) Any further information which would aid in the evaluation of the report.

(3) Mandatory reports shall be exempt from public inspection and copying to the extent permitted under chapter 42.17 RCW.

(4) A person is immune from civil liability, whether direct or derivative, for providing information to the department pursuant to RCW 18.130.070.

[Statutory Authority: RCW 18.19.050(1). 97-17-113, § 246-810-060, filed 8/20/97, effective 9/20/97. Statutory Authority: RCW 43.70.040. 91-02-049 (Order 121), recodified as § 246-810-060, filed 12/27/90, effective 1/31/91. Statutory Authority: RCW 18.130.070. 89-14-092 (Order PM 842), § 308-190-070, filed 6/30/89.]

WAC 246-810-061 Health care institutions. The chief administrator or executive officer or their designee of any hospital, nursing home, chemical dependency treatment programs as defined in chapter 70.96A RCW, drug treatment agency as defined in chapter 69.54 RCW, and public and private mental health treatment agencies as defined in RCW 71.05.020 (6) and (7), and 71.24.025(3), shall report to the department when any counselor's services are terminated or are restricted based upon a determination that the counselor has committed an act which may constitute unprofessional conduct or that the counselor may be unable to practice with reasonable skill or safety to clients by reason of a mental or physical condition. Reports are to be made in accordance with WAC 246-810-060.

[Statutory Authority: RCW 18.19.050(1). 97-17-113, § 246-810-061, filed 8/20/97, effective 9/20/97. Statutory Authority: RCW 43.70.040. 91-02-049 (Order 121), recodified as § 246-810-061, filed 12/27/90, effective 1/31/91. Statutory Authority: RCW 18.130.070. 89-14-092 (Order PM 842), § 308-190-080, filed 6/30/89.]

WAC 246-810-062 Counselor associations or societies. The president or chief executive officer of any counselor association or society within this state shall report to the department when the association or society determines that a registered counselor has committed unprofessional conduct or that a counselor may not be able to practice counseling with reasonable skill and safety to clients as the result of any mental or physical condition. The report required by must be made regardless of whether the counselor appeals, accepts, or acts upon the association or society's determination. The report must include notification of appeal. Reports must meet the requirements of WAC 246-810-060.

[Statutory Authority: RCW 18.19.050. 06-08-106, § 246-810-062, filed 4/5/06, effective 5/6/06. Statutory Authority: RCW 18.19.050(1). 97-17-113, § 246-810-062, filed 8/20/97, effective 9/20/97. Statutory Authority: RCW 43.70.040. 91-02-049 (Order 121), recodified as § 246-810-062, filed 12/27/90, effective 1/31/91. Statutory Authority: RCW 18.130.070. 89-14-092 (Order PM 842), § 308-190-090, filed 6/30/89.]

WAC 246-810-063 Health care service contractors and disability insurance carriers. The executive officer of every health care service contractor and disability insurer, licensed under chapters 48.20, 48.21, 48.21A, and 48.44 RCW, operating in the state of Washington shall report to the department all final determinations that a counselor has engaged in fraud in billing for services. Reports are to be made in accordance with WAC 246-810-060.

[Statutory Authority: RCW 18.19.050(1). 97-17-113, § 246-810-063, filed 8/20/97, effective 9/20/97. Statutory Authority: RCW 43.70.040. 91-02-049 (Order 121), recodified as § 246-810-063, filed 12/27/90, effective 1/31/91. Statutory Authority: RCW 18.130.070. 89-14-092 (Order PM 842), § 308-190-100, filed 6/30/89.]

WAC 246-810-064 Professional liability carriers. Every institution or organization providing professional liability insurance directly or indirectly to counselors shall send a complete report to the department of any malpractice settlement, award, or payment in excess of twenty thousand dollars as a result of a claim or action for damages alleged to have been caused by an insured counselor's incompetency or negligence in the practice of counseling. Such institution or organization shall also report the award, settlement, or payment of three or more claims during a twelve-month period as a result of the counselor's alleged incompetence or negligence in the practice of counseling. Reports are to be made in accordance with WAC 246-810-060.

[Statutory Authority: RCW 18.19.050(1). 97-17-113, § 246-810-064, filed 8/20/97, effective 9/20/97. Statutory Authority: RCW 43.70.040. 91-02-049 (Order 121), recodified as § 246-810-064, filed 12/27/90, effective 1/31/91. Statutory Authority: RCW 18.130.070. 89-14-092 (Order PM 842), § 308-190-110, filed 6/30/89.]

WAC 246-810-065 Courts. The department requests the assistance of the clerk of trial courts within the state to report all professional malpractice judgments and all convictions of counselors, other than minor traffic violations.

[Statutory Authority: RCW 18.19.050(1). 97-17-113, § 246-810-065, filed 8/20/97, effective 9/20/97. Statutory Authority: RCW 43.70.040. 91-02-049 (Order 121), recodified as § 246-810-065, filed 12/27/90, effective 1/31/91. Statutory Authority: RCW 18.130.070. 89-14-092 (Order PM 842), § 308-190-120, filed 6/30/89.]

WAC 246-810-066 State and federal agencies. The department requests the assistance of executive officers of any state or federal program operating in the state of Washington, under which a counselor is employed to provide client care services, to report to the department whenever such a counselor has been judged to have demonstrated his/her incompetency or negligence in the practice of counseling, or has otherwise committed unprofessional conduct, or may not be able to practice with reasonable skill and safety by reason of any mental or physical condition. These requirements do not supersede any federal or state law.

[Statutory Authority: RCW 18.19.050(1). 97-17-113, § 246-810-066, filed 8/20/97, effective 9/20/97. Statutory Authority: RCW 43.70.040. 91-02-049 (Order 121), recodified as § 246-810-066, filed 12/27/90, effective 1/31/91. Statutory Authority: RCW 18.130.070. 89-14-092 (Order PM 842), § 308-190-130, filed 6/30/89.]

WAC 246-810-080 AIDS prevention and information education requirements. Applicants must complete four clock hours of AIDS education as required in chapter 246-12 WAC, Part 8.

[Statutory Authority: RCW 43.70.280. 98-05-060, § 246-810-080, filed 2/13/98, effective 3/16/98. Statutory Authority: RCW 18.19.050(1). 97-17-

113, § 246-810-080, filed 8/20/97, effective 9/20/97. Statutory Authority: RCW 43.70.040. 91-02-049 (Order 121), recodified as § 246-810-080, filed 12/27/90, effective 1/31/91. Statutory Authority: RCW 70.24.270. 88-22-077 (Order PM 786), § 308-190-200, filed 11/2/88.]

FEES

WAC 246-810-990 Counselors fees and renewal cycle. (1) Under chapter 246-12 WAC, Part 2, a counselor must renew his or her registration every year on the practitioner's birthday. The secretary may require payment of renewal fees less than those established in this section if the current level of fees is likely to result in a surplus of funds. Surplus funds are those in excess of the amount necessary to pay for the costs of administering the program and to maintain a reasonable reserve. Notice of any adjustment in the required payment will be provided to practitioners. The adjustment in the required payment shall remain in place for the duration of a renewal cycle to assure practitioners an equal benefit from the adjustment.

Title		Fee
(2)	The following nonrefundable fees will be charged for registered counselor:	
	Application and registration	$130.00
	Renewal	117.00
	Late renewal penalty	58.50
	Expired registration reissuance	65.00
	Duplicate registration	15.00
	Certification of registration	15.00
(3)	The following nonrefundable fees will be charged for registered hypnotherapist:	
	Application and registration	95.00
	Renewal	130.00
	Late renewal penalty	65.00
	Expired registration reissuance	65.00
	Duplicate registration	15.00
	Certification of registration	15.00

[Statutory Authority: RCW 43.70.110, 43.70.250 and 2008 c 329. 08-16-008, § 246-810-990, filed 7/24/08, effective 7/25/08. Statutory Authority: RCW 18.19.050. 06-08-106, § 246-810-990, filed 4/5/06, effective 5/6/06. Statutory Authority: RCW 43.70.250, [43.70.]280 and 43.70.110. 05-12-012, § 246-810-990, filed 5/20/05, effective 7/1/05. Statutory Authority: RCW 43.70.250. 99-08-101, § 246-810-990, filed 4/6/99, effective 7/1/99. Statutory Authority: RCW 43.70.280. 98-05-060, § 246-810-990, filed 2/13/98, effective 3/16/98. Statutory Authority: RCW 18.19.050(1). 97-17-113, § 246-810-990, filed 8/20/97, effective 9/20/97. Statutory Authority: Chapter 18.19 RCW. 96-08-069, § 246-810-990, filed 4/3/96, effective 5/4/96. Statutory Authority: RCW 43.70.250. 93-14-011, § 246-810-990, filed 6/24/93, effective 7/25/93. Statutory Authority: RCW 43.70.040. 91-02-049 (Order 121), recodified as § 246-810-990, filed 12/27/90, effective 1/31/91. Statutory Authority: RCW 43.70.250. 90-18-039 (Order 084), § 308-190-010, filed 8/29/90, effective 9/29/90; 90-04-094 (Order 029), § 308-190-010, filed 2/7/90, effective 3/10/90. Statutory Authority: RCW 43.24.086. 87-18-033 (Order PM 669), § 308-190-010, filed 8/27/87.]

Chapter 246-811 WAC

CHEMICAL DEPENDENCY PROFESSIONALS

WAC

DEFINITIONS

246-811-010 What definitions should I know?
246-811-020 Sexual misconduct.

EDUCATION

246-811-030 What are the minimum education requirements for chemical dependency professional certification?

EXPERIENCE REQUIREMENTS

246-811-045 How will my experience be counted?
246-811-046 How many hours of experience will I need for certification?
246-811-047 What competencies must I become proficient at during my experience?
246-811-048 How much of the experience requirement needs to be under supervision?
246-811-049 Who may act as an approved supervisor?

EXAMINATION

246-811-060 What examination is required for certification?

NATIONAL CERTIFICATIONS

246-811-070 To what extent will my national certification be recognized by the department?

AIDS REQUIREMENT

246-811-075 How many hours of AIDS prevention and information education do I need?

EXPIRED CREDENTIAL

246-811-080 What happens if my certification expires?

RETIRED ACTIVE CREDENTIAL

246-811-081 How may I obtain a retired active credential?
246-811-082 What is the retired active credential renewal fee?

CLIENT DISCLOSURE INFORMATION

246-811-090 Who must provide client disclosure information?
246-811-100 What must I include on my disclosure statement?
246-811-110 What happens if I fail to provide client disclosure information?

CONTINUING COMPETENCY PROGRAM

246-811-200 What continuing competency definitions should I know?
246-811-210 What is the scope and purpose of a continuing competency program?
246-811-220 What are the continuing competency program requirements?
246-811-230 What is the continuing competency reporting period?
246-811-240 How many continuing education hours are needed?
246-811-250 What are acceptable programs or courses for continuing education?
246-811-260 How do I fulfill the twelve hours of other professional development activities?
246-811-270 What is acceptable audit documentation for continuing education, professional development activities, and the enhancement plan?

FEES

246-811-990 How often do I need to renew and what are the costs for certification?

DEFINITIONS

WAC 246-811-010 What definitions should I know? (1) **Approved supervisor** is an individual who meets the education and experience requirements described in WAC 246-811-030 and 246-811-045 through 246-811-049 and who is available to the person being supervised.

(2) **Approved school** means any college or university accredited by a national or regional accrediting body recognized by the commission on recognition of postsecondary accreditation, at the time the applicant completed the required education.

(3) **Official transcript** is defined as the transcript from an approved college or university, in an envelope readily identified as having been sealed by the school.

(4) **Individual formal meetings** is defined as a meeting with an approved supervisor, involving one approved supervisor and no more than four supervisees.

(5) **Addiction counseling competencies** means the knowledge, skills, and attitudes of chemical dependency counselor professional practice as described in Technical Assistance publication No. 21, Center for Substance Abuse Treatment (CSAT), Substance Abuse and Mental Health Services Administration (SAMHSA), U.S. Department of Health and Human Services 1998.

(6) **Related field** is defined as health education, behavioral science, sociology, psychology, marriage and family therapy, mental health counseling, social work, psychiatry, nursing, divinity, criminal justice, and counseling education.

[Statutory Authority: RCW 18.205.060(1). 99-13-084, § 246-811-010, filed 6/14/99, effective 7/15/99.]

WAC 246-811-020 Sexual misconduct. (1) The definitions and prohibitions on sexual misconduct described in chapter 246-16 WAC apply to chemical dependency professionals except WAC 246-16-100 (3) and (4).

(2) A chemical dependency professional shall never engage, or attempt to engage, in the activities listed in WAC 246-16-100(1) with a former patient, former client or former key party.

[Statutory Authority: RCW 18.155.040, 18.19.050, 18.225.040, 18.205.060, 18.130.050. 08-07-090, § 246-811-020, filed 3/19/08, effective 4/19/08.]

EDUCATION

WAC 246-811-030 What are the minimum education requirements for chemical dependency professional certification? (1) The minimum education requirements are:

(a) An associate's degree in human services or related field from an approved school; or

(b) Successful completion of ninety quarter or sixty semester college credits in courses from an approved school.

(2) At least forty-five quarter or thirty semester credits must be in courses relating to the chemical dependency profession and shall include the following topics:

(a) Understanding addiction;

(b) Pharmacological actions of alcohol and other drugs;

(c) Substance abuse and addiction treatment methods;

(d) Understanding addiction placement, continuing care, and discharge criteria, including American Society of Addiction Medicine (ASAM) criteria;

(e) Cultural diversity including people with disabilities and its implication for treatment;

(f) Chemical dependency clinical evaluation (screening and referral to include comorbidity);

(g) HIV/AIDS brief risk intervention for the chemically dependent;

(h) Chemical dependency treatment planning;

(i) Referral and use of community resources;

(j) Service coordination (implementing the treatment plan, consulting, continuing assessment and treatment planning);

(k) Individual counseling;

(l) Group counseling;

(m) Chemical dependency counseling for families, couples and significant others;

(n) Client, family and community education;

(o) Developmental psychology;

(p) Psychopathology/abnormal psychology;

(q) Documentation, to include, screening, intake, assessment, treatment plan, clinical reports, clinical progress notes, discharge summaries, and other client related data;

(r) Chemical dependency confidentiality;

(s) Professional and ethical responsibilities;

(t) Relapse prevention;

(u) Adolescent chemical dependency assessment and treatment;

(v) Chemical dependency case management; and

(w) Chemical dependency rules and regulations.

(3) All applicants, including individuals who are licensed under chapter 18.83 RCW, Psychologists; and chapter 18.79 RCW, Advance nurse practitioner, must also meet the requirements in subsection (2) of this section.

[Statutory Authority: RCW 18.205.060(1). 99-13-084, § 246-811-030, filed 6/14/99, effective 7/15/99.]

EXPERIENCE REQUIREMENTS

WAC 246-811-045 How will my experience be counted? (1) The department of health will consider experience up to seven years prior to the date of application.

(2) Accumulation of the experience hours is not required to be consecutive. Experience that will count toward certification must meet the requirements outlined in WAC 246-811-046 through 246-811-049.

(3) Supervised experience is the practice as referred to in RCW 18.205.090 (1)(c) and is the experience received under an approved supervisor. A practicum or internship taken while acquiring the degree or semester/quarter hours is applicable.

[Statutory Authority: RCW 18.205.060(1). 99-13-084, § 246-811-045, filed 6/14/99, effective 7/15/99.]

WAC 246-811-046 How many hours of experience will I need for certification? You will be required to complete two thousand five hundred, two thousand or one thousand five hundred hours of supervised experience depending upon your formal education level.

(1) Two thousand five hundred hours of chemical dependency counseling as defined in RCW 18.205.020(3), for individuals who possess an associate degree; or

(2) Two thousand hours of chemical dependency counseling for individuals who possess a baccalaureate degree in human services or a related field from an approved school; or

(3) One thousand five hundred hours of chemical dependency counseling for individuals who possess a master or doctoral degree in human services or a related field from an approved school; or

(4) One thousand five hundred hours of chemical dependency counseling for individuals who are licensed as advanced registered nurse practitioners under chapter 18.79 RCW; or

(5) One thousand five hundred hours of chemical dependency counseling for individuals who are licensed as a psychologist under chapter 18.83 RCW.

[Statutory Authority: RCW 18.205.060(1). 99-13-084, § 246-811-046, filed 6/14/99, effective 7/15/99.]

WAC 246-811-047 What competencies must I become proficient at during my experience? (1) It is the intent that individuals become competent in addiction counseling competencies, as defined in WAC 246-811-010(5), through the experience requirement.

(2) Individuals must experience the addiction counseling competencies listed in (a) through (i) of this subsection.

(a) Two hundred hours of clinical evaluation. One hundred hours of the two hundred must be face-to-face patient contact hours.

(b) Six hundred hours of face-to-face counseling to include:

Individual counseling;

Group counseling;

Counseling family, couples, and significant others.

(c) Fifty hours of discussion of professional and ethical responsibilities.

(d) Transdisciplinary foundations:

Understanding addiction;

Treatment knowledge;

Application to practice;

Professional readiness.

(e) Treatment planning.

(f) Referral.

(g) Service coordination.

(h) Client, family, and community education.

(i) Documentation, to include, screening, intake, assessment, treatment plan, clinical reports, clinical progress notes, discharge summaries, and other client related data.

(3) Eight hundred fifty hours of experience are designated to subsection (2)(a) through (c) of this subsection, the remaining experience hours must be divided among subsection (2)(d) through (i) of this subsection as determined by the supervisor.

[Statutory Authority: RCW 18.205.060(1). 99-13-084, § 246-811-047, filed 6/14/99, effective 7/15/99.]

WAC 246-811-048 How much of the experience requirement needs to be under supervision? (1) All of the experience must be under an approved supervisor as defined in WAC 246-811-010(1). The first fifty hours of any face-to-face client contact must be under direct observation of an approved supervisor or a chemical dependency professional. Supervision shall be based on assisting the person being supervised in acquiring proficiency in the addiction counseling competencies as defined in WAC 246-811-010(5).

(2) Approved supervisors shall attest to the department of the supervised person's satisfactory progress in becoming proficient in the addiction counseling competencies as listed in WAC 246-811-047 (2)(a) through (i) on forms provided by the department.

[Statutory Authority: RCW 18.205.060(1). 99-13-084, § 246-811-048, filed 6/14/99, effective 7/15/99.]

WAC 246-811-049 Who may act as an approved supervisor? (1) An approved supervisor is a certified chemical dependency professional or a person who meets or exceeds the requirements of a certified chemical dependency professional in the state of Washington, and who would be eligible to take the examination required for certification; and

(2) An approved supervisor has at least four thousand hours of experience in a state approved chemical dependency treatment agency.

(a) The four thousand hours are in addition to the supervised experience hours required to be eligible to become a chemical dependency professional.

(b) Twenty-eight clock hours of recognized supervisory training may be substituted for one thousand hours of experience; and

(3) An approved supervisor is not a blood or legal relative, significant other, cohabitant of the supervisee, or someone who has acted as the person supervised's primary counselor.

[Statutory Authority: RCW 18.205.060(1). 99-13-084, § 246-811-049, filed 6/14/99, effective 7/15/99.]

EXAMINATION

WAC 246-811-060 What examination is required for certification? (1) All applicants must take and pass the National Association of Alcoholism and Drug Abuse Counselor (NAADAC) National Certification Examination for Addiction Counselors or International Certification and Reciprocity Consortium (ICRC) Certified Addiction Counselor Level II or higher examination.

(2) The department will accept the passing score established by the testing company.

(3) The application and application fee must be submitted to the department at least ninety days prior to the scheduled examination date. All other supporting documents, including verification of education and experience, must be submitted at least sixty days prior to the examination date.

[Statutory Authority: RCW 18.205.060(7). 00-01-122, § 246-811-060, filed 12/17/99, effective 1/17/00.]

NATIONAL CERTIFICATIONS

WAC 246-811-070 To what extent will my national certification be recognized by the department? (1) A person who is certified through the National Association of Alcoholism and Drug Abuse Counselors (NAADAC) or the International Certification and Reciprocity Consortium (ICRC), is considered to have met the experience requirements of WAC 246-811-046.

(2) A person who is certified through NAADAC or ICRC is considered to have met the requirements of WAC 246-811-030 pertaining to the forty-five quarter or thirty semester credits in courses covering the subject content described in WAC 246-811-030(2). Verification of the additional forty-five quarter or thirty semester credits will be required upon application to the department.

(3) Verification of certification must be sent directly to the department from NAADAC or ICRC.

[Statutory Authority: RCW 18.205.060(1). 99-13-084, § 246-811-070, filed 6/14/99, effective 7/15/99.]

AIDS REQUIREMENT

WAC 246-811-075 How many hours of AIDS prevention and information education do I need? Applicants

must complete four clock hours of AIDS education as required in chapter 246-12 WAC, Part 8.

[Statutory Authority: RCW 18.205.060(1). 99-13-084, § 246-811-075, filed 6/14/99, effective 7/15/99.]

EXPIRED CREDENTIAL

WAC 246-811-080 What happens if my certification expires? (1) If the certification has expired for five years or less the individual must meet the requirements of chapter 246-12 WAC, Part 2.

(2) If a certification has lapsed for more than five years, the applicant will be required to demonstrate continued competency and shall be required to take an examination if an examination was not taken and passed for the initial certification. In addition, the requirements of chapter 246-12 WAC, Part 2, must be met.

[Statutory Authority: RCW 18.205.060(1). 99-13-084, § 246-811-080, filed 6/14/99, effective 7/15/99.]

RETIRED ACTIVE CREDENTIAL

WAC 246-811-081 How may I obtain a retired active credential? A certified chemical dependency professional may obtain a retired active credential. Refer to the requirements of chapter 246-12 WAC, Part 5.

[Statutory Authority: RCW 18.130.250. 02-07-083, § 246-811-081, filed 3/19/02, effective 4/19/02.]

WAC 246-811-082 What is the retired active credential renewal fee? The retired active credential renewal fee is specified in WAC 246-811-990.

[Statutory Authority: RCW 18.130.250. 02-07-083, § 246-811-082, filed 3/19/02, effective 4/19/02.]

CLIENT DISCLOSURE INFORMATION

WAC 246-811-090 Who must provide client disclosure information? Chemical dependency professionals must provide disclosure information to each client prior to the delivery of certified services (WAC 440-22-010). Disclosure information may be printed in a format of the chemical dependency professional's choosing or in a general format used by a state approved treatment facility.

[Statutory Authority: RCW 18.205.060(15). 00-12-102, § 246-811-090, filed 6/7/00, effective 7/8/00.]

WAC 246-811-100 What must I include on my disclosure statement? (1) The following information must be printed on all disclosure statements provided to counseling clients in language that can be easily understood by the client:

(a) Name of firm, agency, business, or chemical dependency professional's practice.

(b) Chemical dependency professional's business address and telephone number.

(c) Washington state certified chemical dependency professional number.

(d) The chemical dependency professional's name with credentials.

(e) Billing information, including:

(i) Client's cost per each counseling session;

(ii) Billing practices, including any advance payments and refunds.

(f) A list of the acts of unprofessional conduct in RCW 18.130.180 including the name, address, and contact telephone number within the department of health.

(2) The chemical dependency professional and the client must sign and date a statement indicating that the client has been provided a copy of the required disclosure information and the client has read and understands the information provided.

[Statutory Authority: RCW 18.205.060(15). 00-12-102, § 246-811-100, filed 6/7/00, effective 7/8/00.]

WAC 246-811-110 What happens if I fail to provide client disclosure information? Failure to provide to the client any of the disclosure information required by WAC 246-811-090 and 246-811-100 constitutes an act of unprofessional conduct as defined in RCW 18.130.180(7) and may be grounds for disciplinary action.

[Statutory Authority: RCW 18.205.060(15). 00-12-102, § 246-811-110, filed 6/7/00, effective 7/8/00.]

CONTINUING COMPETENCY PROGRAM

WAC 246-811-200 What continuing competency definitions should I know? (1) **Continuing education** means a program or course (including distance learning), seminars, or workshops, professional conferences approved by an industry recognized local, state, national, international organization or institution of higher learning.

(2) **Professional development activities** means addiction competencies as outlined in WAC 246-811-047, including: Clinical evaluation, individual counseling, group counseling, counseling family, couples, and significant others, professional and ethical responsibilities, understanding addiction, treatment knowledge, application to practice, professional readiness, treatment planning, referral, service coordination, client, family, and community education, screening, intake, assessment, clinical reports, clinical progress notes, discharge summaries, and other client related data.

(3) **Industry recognized** is any local, state, national, international organization, or institution of higher learning, including, but not limited to, the following organizations:

(a) National Association of Alcoholism and Drug Abuse Counselors (NAADAC);

(b) National Association of Addiction Treatment Providers (NAATP);

(c) International Certification and Reciprocity Consortium (ICRC);

(d) Northwest Indian alcohol/drug specialist certification board;

(e) Chemical dependency counselor certification board;

(f) Institutions of higher learning that are accredited by a national or regional accrediting body recognized by the Commission on Recognition of Postsecondary Accreditation; or

(g) Division of alcohol and substance abuse (DASA).

(4) **Distance learning** is industry recognized education obtained to enhance proficiency in one or more of the professional development activities as outlined in subsection (2) of this section, through sources such as, internet coursework,

satellite downlink resources, telecourses, or correspondence courses.

(5) **Agency sponsored training** is training provided by an agency that is **not** limited to people working within that agency and is a professional development activity as outlined in subsection (2) of this section.

(6) **In-service training** is training provided by an agency that is limited to people working within that agency and is a professional development activity as outlined in subsection (2) of this section.

(7) **Continuing competency enhancement plan** is a plan showing the goals the CDP will develop to continue proficiency in their profession. The plan will be based on core competencies as listed in WAC 246-811-047. The plan will be developed on forms provided by the department.

[Statutory Authority: RCW 18.205.060(12). 02-07-084, § 246-811-200, filed 3/19/02, effective 4/19/02.]

WAC 246-811-210 What is the scope and purpose of a continuing competency program? To enhance the professional competency of the CDP. A successful continuing competency program focuses on all aspects of professional practice to ensure that the practitioner is competent to provide safe and quality care to patients. The purpose of the professional development activities is to broaden the experience that a CDP may undertake to maintain competency.

[Statutory Authority: RCW 18.205.060(12). 02-07-084, § 246-811-210, filed 3/19/02, effective 4/19/02.]

WAC 246-811-220 What are the continuing competency program requirements? (1) CDPs must complete an enhancement plan;

(2) CDPs must complete twenty-eight hours of continuing education; and

(3) CDPs must complete twelve hours of other professional development activities as outlined in WAC 246-811-047 and 246-811-200(2).

[Statutory Authority: RCW 18.205.060(12). 02-07-084, § 246-811-220, filed 3/19/02, effective 4/19/02.]

WAC 246-811-230 What is the continuing competency reporting period? CDPs must complete the continuing competency program requirements every two years. CDPs will develop and implement the plan on their 2002 renewal date or upon initial certification. The effective date for reporting the continuing competency program requirements shall begin with the 2004 renewal cycle.

[Statutory Authority: RCW 18.205.060(12). 02-07-084, § 246-811-230, filed 3/19/02, effective 4/19/02.]

WAC 246-811-240 How many continuing education hours are needed? CDPs must complete twenty-eight hours of continuing education every two years. At least fourteen hours must be completed in one or more of the topic areas as described in WAC 246-811-030 (2)(a) through (w). At least four hours must be in professional ethics and law. The additional ten hours shall be in areas relating to the various phases of their professional career.

[Statutory Authority: RCW 18.205.060(12). 02-07-084, § 246-811-240, filed 3/19/02, effective 4/19/02.]

WAC 246-811-250 What are acceptable programs or courses for continuing education? (1) Programs having a featured instructor, speaker(s) or panel that is industry recognized;

(2) Distance learning programs;

(3) Agency sponsored trainings;

(4) Course work at institutions of higher learning that are accredited by a national or regional accrediting body recognized by the commission on recognition of postsecondary accreditation; or

(5) In-service training programs limited to seven hours per reporting period.

[Statutory Authority: RCW 18.205.060(12). 02-07-084, § 246-811-250, filed 3/19/02, effective 4/19/02.]

WAC 246-811-260 How do I fulfill the twelve hours of other professional development activities? (1) CDPs may obtain hours through the following:

(a) Practicum;

(b) Peer-review including serving on a formal peer review panel or committee, or individual review of a sole provider, where the purpose of the review is to determine whether appropriate treatment was rendered;

(c) Public presentation including preparing and presenting lectures or education that contribute to the professional competence of a CDP. The CDP may accumulate the same number of hours obtained for continuing education purposes by attendees as required in WAC 246-12-220. The hours for presenting a specific topic lecture or education may only be used for continuing education credit once during each reporting period;

(d) Publication of writings;

(e) Other activities as determined by the CDP's supervisor;

(f) Continuing education; these continuing education hours are in addition to the twenty-eight hours of continuing education as listed in WAC 246-811-240.

(2) All documentation must include the dates the continuing competency activity occurred, and if appropriate, the title of the course, the location of the course, and the name of the instructor.

[Statutory Authority: RCW 18.205.060(12). 02-07-084, § 246-811-260, filed 3/19/02, effective 4/19/02.]

WAC 246-811-270 What is acceptable audit documentation for continuing education, professional development activities, and the enhancement plan? (1) Acceptable documentation must be specific to the program completed and include:

(a) Transcripts, letters from course instructors, or certificate of completion;

(b) Written report by the CDP explaining how they achieved the competencies in WAC 246-811-047; or

(c) Signed agreement between parties involved.

(2) CDPs must comply with the requirements of chapter 246-12 WAC, part 7.

[Statutory Authority: RCW 18.205.060(12). 02-07-084, § 246-811-270, filed 3/19/02, effective 4/19/02.]

FEES

WAC 246-811-990 How often do I need to renew and what are the costs for certification? (1) Certificates must be renewed every year on the practitioner's birthday as provided in chapter 246-12 WAC, Part 2. The secretary may require payment of renewal fees less than those established in this section if the current level of fees is likely to result in a surplus of funds. Surplus funds are those in excess of the amount necessary to pay for the costs of administering the program and to maintain a reasonable reserve. Notice of any adjustment in the required payment will be provided to practitioners. The adjustment in the required payment shall remain in place for the duration of a renewal cycle to assure practitioners an equal benefit from the adjustment.

(2) The following nonrefundable fees will be charged for certified chemical dependency professional:

Title of Fee	Fee
Application	$200.00
Initial certification	225.00
Renewal	230.00
Renewal retired active	115.00
Late renewal retired active	57.50
Late renewal penalty	115.00
Expired certification reissuance	115.00
Duplicate certification	10.00
Certification of certificate	10.00

[Statutory Authority: RCW 43.70.110, 43.70.250, 2008 c 329. 08-15-014, § 246-811-990, filed 7/7/08, effective 7/7/08. Statutory Authority: RCW 43.70.250, [43.70.]280 and 43.70.110. 05-12-012, § 246-811-990, filed 5/20/05, effective 7/1/05. Statutory Authority: RCW 18.130.250. 02-07-083, § 246-811-990, filed 3/19/02, effective 4/19/02. Statutory Authority: RCW 18.205.060(1). 99-13-084, § 246-811-990, filed 6/14/99, effective 7/15/99.]

Chapter 246-812 WAC
BOARD OF DENTURE TECHNOLOGY

WAC

DENTURISTS

246-812-001 Purpose.
246-812-010 Definitions.
246-812-015 Adjudicative proceedings—Procedural rules.
246-812-020 Continuing competency requirements.

LICENSURE—APPLICATION AND ELIGIBILITY REQUIREMENTS

246-812-101 Purpose.
246-812-120 Denturist licensure—Initial eligibility and application requirements.
246-812-125 Denturist licensure—Endorsement.
246-812-150 Examination—Content and scores.
246-812-155 Denturist examination scores.
246-812-160 Expired license.
246-812-161 Inactive credential.
246-812-170 License renewal form.

PRACTICE STANDARDS

246-812-301 Purpose.
246-812-320 Maintenance and retention of patient records.
246-812-330 Privileged communications.
246-812-340 Patient abandonment.
246-812-350 License display—Notification of address.
246-812-360 Identification of new dentures.
246-812-390 Improper billing practices.
246-812-400 Denturist associations or societies.
246-812-410 Insurance carriers.
246-812-420 Professional liability carriers.
246-812-430 Courts.
246-812-440 State and federal agencies.
246-812-450 Professional standards review organizations.
246-812-460 Board conflict of interest.

INFECTION CONTROL

246-812-501 Purpose.
246-812-510 Definitions.
246-812-520 Use of barriers and sterilization techniques.

SUBSTANCE ABUSE MONITORING

246-812-601 Purpose.
246-812-610 Definitions.
246-812-620 Approval of substance abuse monitoring programs.
246-812-630 Participation in approved substance abuse monitoring program.

FEES

246-812-990 Denturist fees and renewal cycle.

DISPOSITION OF SECTIONS FORMERLY CODIFIED IN THIS CHAPTER

246-812-130 Denturist licensure—Training course approval. [Statutory Authority: RCW 18.30.070(3). 98-20-068, § 246-812-130, filed 10/2/98, effective 11/2/98; 95-22-062, § 246-812-130, filed 10/30/95, effective 11/30/95.] Repealed by 03-12-061, filed 6/2/03, effective 7/3/03. Statutory Authority: RCW 18.30.065.

246-812-140 Application for licensure—AIDS education requirements. [Statutory Authority: RCW 18.30.070(3). 95-22-062, § 246-812-140, filed 10/30/95, effective 11/30/95.] Repealed by 98-05-060, filed 2/13/98, effective 3/16/98. Statutory Authority: RCW 43.70.280.

246-812-995 Conversion to a birthday renewal cycle. [Statutory Authority: RCW 18.30.070(3). 98-20-068, § 246-812-995, filed 10/2/98, effective 11/2/98. Statutory Authority: RCW 43.70.280. 98-05-060, § 246-812-995, filed 2/13/98, effective 3/16/98.] Repealed by 05-12-012, filed 5/20/05, effective 7/1/05. Statutory Authority: RCW 43.70.250, [43.70.]280 and 43.70.110.

DENTURISTS

WAC 246-812-001 Purpose. The purpose of these rules is to further clarify and define chapter 18.30 RCW, Denturists.

[Statutory Authority: RCW 18.30.070(3). 98-20-068, § 246-812-001, filed 10/2/98, effective 11/2/98; 95-22-062, § 246-812-001, filed 10/30/95, effective 11/30/95.]

WAC 246-812-010 Definitions. The following terms are so defined for the purposes of this chapter:

"Acquired immunodeficiency syndrome" or **"AIDS"** means the clinical syndrome of HIV-related illness as defined by the board of health by rule.

"Approval" and **"accreditation"** are used interchangeably with reference to sanctioning of courses.

"Board" means the Washington state board of denturists, whose address is:

Department of Health
Health Profession Quality Assurance
Washington State Board of Denturists
310 Israel Rd. SE, PO Box 47867
Olympia, WA 98504-7867

"Office on AIDS" means that section within the department of health with jurisdiction over public health matters as defined in chapter 70.24 RCW.

[Statutory Authority: RCW 18.30.065. 03-12-061, § 246-812-010, filed 6/2/03, effective 7/3/03. Statutory Authority: RCW 18.30.070(3). 98-20-

068, § 246-812-010, filed 10/2/98, effective 11/2/98; 95-22-062, § 246-812-010, filed 10/30/95, effective 11/30/95.]

WAC 246-812-015 Adjudicative proceedings—Procedural rules. Adjudicative proceedings are conducted pursuant to the model procedural rules for adjudicative proceedings as adopted by the department of health and contained in chapter 246-10 WAC, including subsequent amendments.

[Statutory Authority: RCW 18.30.070(3). 98-20-068, § 246-812-015, filed 10/2/98, effective 11/2/98; 95-22-062, § 246-812-015, filed 10/30/95, effective 11/30/95.]

WAC 246-812-020 Continuing competency requirements. (1) Purpose. The board in agreement with the secretary of the department of health has determined that the public health, safety and welfare of the citizens of the state will be served by requiring all denturists, licensed under chapter 18.30 RCW, to continue their professional development via continuing competency after receiving their licenses.

(2) Effective date. The effective date for the continuing competency requirements for denturists is January 1, 2006. The reporting cycle for verifying completion of continuing competency hours will begin on January 1, 2008, and each renewal date thereafter.

(3) Requirements. A licensed denturist must complete thirty clock hours of continuing competency, every two years, prior to his or her biennial renewal date. The licensee must sign a declaration attesting to the completion of the required number of hours as part of the biennial renewal requirement. The department of health may randomly audit up to twenty-five percent of practitioners for compliance with these rules, after the credential is renewed as allowed by chapter 246-12 WAC, Part 7.

(4) Acceptable continuing competency—Qualification of courses for continuing competency credit. The board will not authorize or approve specific continuing competency courses. Continuing competency course work must contribute to the professional knowledge and development of the practitioner, or enhance services provided to clients.

For the purposes of this chapter, acceptable continuing competency means courses offered or authorized by industry recognized state, local, private, national and international organizations, agencies or institutions of higher learning. Examples of sponsors or types of continuing competency courses include, but are not limited to:

(a) Courses offered or sponsored by the Washington State Denturist Association.

(b) Basic first aid, cardio pulmonary resuscitation, basic life support, advanced cardiac life support, or emergency related training such as courses offered or authorized by the American Heart Association, the American Cancer Society; training offered or sponsored by Occupational Safety and Health Administration (OSHA) or Washington Industrial Safety and Health Act (WISHA); or any other organizations or agencies.

(c) All forms of educational media related to denturism, available through internet, mail or independent reading, that include an assessment tool upon completion, may not exceed ten hours for the two-year period.

(d) A licensee who serves as a teacher or who lectures in continuing competency programs and/or courses, that contribute to the professional competence of a licensed denturist may accumulate the same number of hours obtained by licensed denturists attending the program and/or course may not exceed sixteen hours for the two-year period.

(e) Attendance at a continuing competency program with a featured speaker(s) may not exceed sixteen hours for the two-year period.

(f) Time spent preparing an original technical or clinical article for a professional publication may not exceed twelve hours for the two-year period.

(g) Nonclinical courses relating to denturist practice organization and management, patient management, or methods of health delivery may not exceed eight hours for the two-year period.

(h) Estate planning, financial planning, investments, and personal health courses are not acceptable.

(5) The board may disallow any claim of credit for a continuing competency course that does not meet the requirements of subsection (4) of this section.

(6) Failure to complete the continued competency requirements by time of license renewal, or failure to provide adequate documentation of completion, is grounds for denying renewal of his or her license until such time as the licensee demonstrates compliance.

(7) Documentation required. Credit for a continuing competency course may not be claimed by a licensee unless the course organizer provides the licensee with documentation of course attendance.

(8) Exceptions. The following are exceptions from the continuing competency requirements:

Upon a showing of good cause by the licensee, the board may waive the licensee from any, all, or part of the continuing competency requirements in this chapter or may grant additional time for the licensee to complete the requirements. Good cause includes, but is not limited to:

(a) Illness;

(b) Medical necessity or family emergency;

(c) Hardship to practice; or

(d) Other extenuating circumstances.

(9) The requirements of this section are in addition to the requirements in chapter 246-12 WAC, Part 7, related to continuing competency.

[Statutory Authority: RCW 18.30.065. 05-23-101, § 246-812-020, filed 11/17/05, effective 1/1/06.]

LICENSURE—APPLICATION AND ELIGIBILITY REQUIREMENTS

WAC 246-812-101 Purpose. The purpose of WAC 246-812-101 through 246-812-170 is to establish guidelines on eligibility, and set forth the procedures for application to receive a license for the practice of denturism. By statute, the eligibility and application criterion are established in RCW 18.30.090.

[Statutory Authority: RCW 18.30.070(3). 98-20-068, § 246-812-101, filed 10/2/98, effective 11/2/98; 95-22-062, § 246-812-101, filed 10/30/95, effective 11/30/95.]

WAC 246-812-120 Denturist licensure—Initial eligibility and application requirements. To be eligible for Washington state denturist licensure, the applicant shall com-

plete an application and shall include written documentation to meet eligibility criteria. Each applicant shall provide:

(1) A signed, notarized application and required fee. (Refer to WAC 246-812-990 for fee schedule.)

(2) Proof that they meet the basic eligibility requirements identified in RCW 18.30.090, documented by the signed, notarized affidavit processed as part of the application.

(3) Applicants must complete seven clock hours of AIDS education as required in chapter 246-12 WAC, Part 8.

(4) Photograph. A recent photograph, signed and dated, shall be attached to the application.

[Statutory Authority: RCW 18.30.070(3). 98-20-068, § 246-812-120, filed 10/2/98, effective 11/2/98. Statutory Authority: RCW 43.70.280. 98-05-060, § 246-812-120, filed 2/13/98, effective 3/16/98. Statutory Authority: RCW 18.30.070(3). 95-22-062, § 246-812-120, filed 10/30/95, effective 11/30/95.]

WAC 246-812-125 Denturist licensure—Endorsement. For the purposes of endorsement as provided in RCW 18.30.090 (1)(a) licensing authorities shall be determined to be substantially equivalent that meet the following criteria:

(1) Written examination - applicants must have successfully completed a written examination which included testing in the areas of:

(a) Oral pathology;

(b) Head and oral anatomy and physiology;

(c) Dental laboratory technology;

Additionally, the examination must include four of the following test categories:

(d) Partial denture construction and design;

(e) Microbiology;

(f) Clinical dental technology;

(g) Clinical jurisprudence;

(h) Asepsis;

(i) Medical emergencies;

(j) Cardiopulmonary resuscitation.

(2) Practical examination - applicants must have successfully completed a clinical examination.

[Statutory Authority: RCW 18.30.070(3). 98-20-068, § 246-812-125, filed 10/2/98, effective 11/2/98; 95-22-062, § 246-812-125, filed 10/30/95, effective 11/30/95.]

WAC 246-812-150 Examination—Content and scores. An applicant seeking licensure in Washington by examination must successfully complete a written and practical examination as specified in RCW 18.30.100. In order to be licensed, an applicant shall be required to obtain an overall passing score of seventy percent on the written examination and an overall score of seventy percent on the practical examination.

[Statutory Authority: RCW 18.30.070(3). 98-20-068, § 246-812-150, filed 10/2/98, effective 11/2/98; 95-22-062, § 246-812-150, filed 10/30/95, effective 11/30/95.]

WAC 246-812-155 Denturist examination scores. An applicant must pass all sections of the written examination and the practical demonstration of skills within three attempts. After three failures the applicant must petition the board for permission to take any further examination. The board shall have complete discretion regarding such petition and the conditions under which further examination permission may be granted.

[Statutory Authority: RCW 18.30.070(3). 98-20-068, § 246-812-155, filed 10/2/98, effective 11/2/98; 95-22-062, § 246-812-155, filed 10/30/95, effective 11/30/95.]

WAC 246-812-160 Expired license. (1) If the license has expired for three years or less, the practitioner must meet the requirements of chapter 246-12 WAC, Part 2.

(2) If the license has expired for more than three years, the practitioner must:

(a) Successfully pass the examination as provided in RCW 18.30.100;

(b) Meet the requirements of chapter 246-12 WAC, Part 2.

[Statutory Authority: RCW 18.30.065. 03-12-061, § 246-812-160, filed 6/2/03, effective 7/3/03. Statutory Authority: RCW 18.30.070(3). 98-20-068, § 246-812-160, filed 10/2/98, effective 11/2/98. Statutory Authority: RCW 43.70.280. 98-05-060, § 246-812-160, filed 2/13/98, effective 3/16/98. Statutory Authority: RCW 18.30.070(3). 95-22-062, § 246-812-160, filed 10/30/95, effective 11/30/95.]

WAC 246-812-161 Inactive credential. A practitioner may obtain an inactive credential. Refer to the requirements of chapter 246-12 WAC, Part 4.

[Statutory Authority: RCW 18.30.070(3). 98-20-068, § 246-812-161, filed 10/2/98, effective 11/2/98. Statutory Authority: RCW 43.70.280. 98-05-060, § 246-812-161, filed 2/13/98, effective 3/16/98.]

WAC 246-812-170 License renewal form. A license shall not be renewed until the applicant has submitted completed renewal forms and the full amount of the renewal fee, including any penalty fee for late renewal of the license.

[Statutory Authority: RCW 18.30.070(3). 98-20-068, § 246-812-170, filed 10/2/98, effective 11/2/98; 95-22-062, § 246-812-170, filed 10/30/95, effective 11/30/95.]

PRACTICE STANDARDS

WAC 246-812-301 Purpose. The purpose of WAC 246-812-201 through 246-812-460 is to provide standards to guide denturists in the conduct of their practice.

[Statutory Authority: RCW 18.30.070(3). 98-20-068, § 246-812-301, filed 10/2/98, effective 11/2/98; 95-22-062, § 246-812-301, filed 10/30/95, effective 11/30/95.]

WAC 246-812-320 Maintenance and retention of patient records. Any denturist who treats patients in the state of Washington shall maintain complete treatment records regarding patients treated. These records shall include, but shall not be limited to, treatment plans, patient charts, patient histories, correspondence, financial data and billing. These records shall be retained by the denturist for five years in an orderly, accessible file and shall be readily available for inspection by the secretary or its authorized representative. Copies of records may be forwarded to a second party upon the patient's or authorized agent's written request. In such cases, office records shall state the date on which the records were released, method forwarded and to whom, and the reason for the release. A reasonable fee may be charged the patient to cover mailing and clerical costs.

In offices where more than one denturist is performing the services, the records must specify the denturist who performed the services.

[Statutory Authority: RCW 18.30.070(3). 98-20-068, § 246-812-320, filed 10/2/98, effective 11/2/98; 95-22-062, § 246-812-320, filed 10/30/95, effective 11/30/95.]

WAC 246-812-330 Privileged communications. A denturist shall not, without the consent of the patient, reveal any information acquired in attending such patient, which was necessary to enable the denturist to treat the patient. This shall not apply to the release of information in an official proceeding where the release of information may be compelled by law.

[Statutory Authority: RCW 18.30.070(3). 98-20-068, § 246-812-330, filed 10/2/98, effective 11/2/98; 95-22-062, § 246-812-330, filed 10/30/95, effective 11/30/95.]

WAC 246-812-340 Patient abandonment. The denturist shall always be free to accept or reject a particular patient, bearing in mind that whenever possible a denturist shall respond to any reasonable request for his/her services in the interest of public health and welfare.

[Statutory Authority: RCW 18.30.070(3). 98-20-068, § 246-812-340, filed 10/2/98, effective 11/2/98; 95-22-062, § 246-812-340, filed 10/30/95, effective 11/30/95.]

WAC 246-812-350 License display—Notification of address. Every person who engages in the practice of denturism in this state shall display their license, at all times, in a conspicuous place within their office. Whenever requested, they shall exhibit their license to the secretary or the secretary's authorized agent. Every licensee shall notify the secretary of the address or addresses, including changes, where the licensee shall engage in the practice of denturism.

[Statutory Authority: RCW 18.30.070(3). 98-20-068, § 246-812-350, filed 10/2/98, effective 11/2/98; 95-22-062, § 246-812-350, filed 10/30/95, effective 11/30/95.]

WAC 246-812-360 Identification of new dentures. Every complete upper and lower denture and removable partial denture fabricated by a denturist licensed under the provisions of chapter 18.30 RCW, or fabricated pursuant to the denturist's work order or under the denturist's direction or supervision, shall be marked with the name of the patient for whom the denture is intended. The markings shall be done during fabrication and shall be permanent, legible, and cosmetically acceptable. The exact location of the markings and the methods used to apply or implant them shall be determined by the denturist fabricating the denture. If, in the professional judgment of the denturist, this identification is not practical, identification shall be provided as follows:

(1) The initials of the patient may be shown alone, if use of the patient's name is impracticable; or

(2) The identification marks may be omitted in their entirety if none of the forms of identification specified in subsection (1) of this section is practicable, clinically safe, or the patient declines.

[Statutory Authority: RCW 18.30.070(3). 98-20-068, § 246-812-360, filed 10/2/98, effective 11/2/98; 95-22-062, § 246-812-360, filed 10/30/95, effective 11/30/95.]

WAC 246-812-390 Improper billing practices. The following acts shall constitute grounds for which disciplinary action may be taken:

(1) Rebating or offering to rebate to an insured any payment to the licensee by the third-party payor of the insured for services or treatments rendered under the insured's policy.

(2) Submitting to any third-party payor a claim for a service or treatment at a greater or an inflated fee or charge other than the usual fee the licensee charges for that service or treatment when rendered without third-party reimbursement.

[Statutory Authority: RCW 18.30.070(3). 98-20-068, § 246-812-390, filed 10/2/98, effective 11/2/98; 95-22-062, § 246-812-390, filed 10/30/95, effective 11/30/95.]

WAC 246-812-400 Denturist associations or societies. The president or chief executive officer of any denturist association or society within this state shall report to the secretary when an association or society determines that a denturist has committed unprofessional conduct or that a denturist may not be able to practice denturism with reasonable skill and safety to patients as the result of any mental or physical condition and constitutes an apparent risk to the public health, safety, or welfare. The report required by this section shall be made without regard to whether the license holder appeals, accepts, or acts upon the determination made by the association or society. Notification of appeal shall be included.

[Statutory Authority: RCW 18.30.070(3). 98-20-068, § 246-812-400, filed 10/2/98, effective 11/2/98; 95-22-062, § 246-812-400, filed 10/30/95, effective 11/30/95.]

WAC 246-812-410 Insurance carriers. The executive officer of every insurer, licensed under Title 48 RCW operating in the state of Washington, shall report to the secretary any evidence that a denturist has charged fees for denturist services not actually provided, or has otherwise committed unprofessional conduct.

[Statutory Authority: RCW 18.30.070(3). 98-20-068, § 246-812-410, filed 10/2/98, effective 11/2/98; 95-22-062, § 246-812-410, filed 10/30/95, effective 11/30/95.]

WAC 246-812-420 Professional liability carriers. Every institution or organization providing professional liability insurance directly or indirectly to denturists shall send the secretary a complete report of any malpractice settlement, award or payment over five thousand dollars as a result of a claim or action for damages alleged to have been caused by an insured denturist's incompetence or negligence in the practice of denturism. Such institution or organization shall also report the payment of three or more claims during a year as the result of alleged incompetence or negligence in the practice of denturism regardless of the dollar amount of the payment.

[Statutory Authority: RCW 18.30.070(3). 98-20-068, § 246-812-420, filed 10/2/98, effective 11/2/98; 95-22-062, § 246-812-420, filed 10/30/95, effective 11/30/95.]

WAC 246-812-430 Courts. The secretary requests the assistance of all clerks of trial courts within the state to report, to the secretary, all professional malpractice judgments and

all criminal convictions of licensed denturists, other than for minor traffic violations.

[Statutory Authority: RCW 18.30.070(3). 98-20-068, § 246-812-430, filed 10/2/98, effective 11/2/98; 95-22-062, § 246-812-430, filed 10/30/95, effective 11/30/95.]

WAC 246-812-440 State and federal agencies. The secretary requests the assistance of executive officers of any state or federal program operating in the state of Washington, under which a denturist has been judged to have demonstrated incompetence or negligence in the practice of denturism, or has otherwise committed unprofessional conduct; or whose practice is impaired as a result of a mental, physical or chemical condition, to report to the secretary all professional malpractice judgments and decisions.

[Statutory Authority: RCW 18.30.070(3). 98-20-068, § 246-812-440, filed 10/2/98, effective 11/2/98; 95-22-062, § 246-812-440, filed 10/30/95, effective 11/30/95.]

WAC 246-812-450 Professional standards review organizations. Unless prohibited by federal or state law, every professional standards review organization operating within the state of Washington shall report to the secretary any conviction, determination, or finding that a license holder has committed an act which constitutes unprofessional conduct, or to report information which indicates that the license holder may not be able to practice their profession with reasonable skill and safety to consumers as a result of a mental or physical condition.

[Statutory Authority: RCW 18.30.070(3). 98-20-068, § 246-812-450, filed 10/2/98, effective 11/2/98; 95-22-062, § 246-812-450, filed 10/30/95, effective 11/30/95.]

WAC 246-812-460 Board conflict of interest. Members of the board shall not participate in a disciplinary case where their participation presents a conflict of interest or creates an appearance of a conflict of interest.

[Statutory Authority: RCW 18.30.070(3). 98-20-068, § 246-812-460, filed 10/2/98, effective 11/2/98; 95-22-062, § 246-812-460, filed 10/30/95, effective 11/30/95.]

INFECTION CONTROL

WAC 246-812-501 Purpose. The purpose of WAC 246-812-501 through 246-812-520 is to establish requirements for infection control in denturist offices to protect the health and well-being of the people of the state of Washington. For purposes of infection control, all denturist staff members and all patients shall be considered potential carriers of communicable diseases. Infection control procedures are required to prevent disease transmission from patient to denturist and staff, denturist and staff to patient, and from patient to patient. Every denturist is required to comply with the applicable standard of care in effect at the time of treatment. At a minimum, the denturist must comply with the requirements defined in WAC 246-812-520.

[Statutory Authority: RCW 18.30.070(3). 98-20-068, § 246-812-501, filed 10/2/98, effective 11/2/98; 95-22-062, § 246-812-501, filed 10/30/95, effective 11/30/95.]

WAC 246-812-510 Definitions. The following definitions pertain to WAC 246-812-501 through 246-812-520.

"Communicable diseases" means an illness caused by an infectious agent which can be transmitted from one person, animal, or object to another person by direct or indirect means including transmission via an intermediate host or vector, food, water or air.

"Decontamination" means the use of physical or chemical means to remove, inactivate, or destroy bloodborne pathogens on a surface or item to the point where they are no longer capable of transmitting infectious particles and the surface or item is rendered safe for handling, use, or disposal.

"Direct care staff" are the denturist staff who directly provide denturist care to patients.

"Sterilize" means the use of a physical or chemical procedure to destroy all microbial life including highly resistant bacterial endospores.

[Statutory Authority: RCW 18.30.070(3). 98-20-068, § 246-812-510, filed 10/2/98, effective 11/2/98; 95-22-062, § 246-812-510, filed 10/30/95, effective 11/30/95.]

WAC 246-812-520 Use of barriers and sterilization techniques. The use of barriers and sterilization techniques is the primary means of assuring that there is the least possible chance of the transmission of communicable diseases from denturist and staff to patients, from patient to patient and from patient to denturist and staff. To prevent patient to patient cross contamination, instruments and supplies contaminated or likely to be contaminated with blood or saliva and touched during treatment must be sterilized between patients or discarded except as otherwise set forth below. Surfaces and equipment which are likely to be contaminated with blood or saliva and touched during treatment must be decontaminated or covered with a barrier which is discarded and replaced between patients except as otherwise set forth below:

(1) Denturists shall comply with the following barrier techniques:

(a) Gloves shall be used by the denturist and direct care staff during treatment which involves intraoral procedures or contact with items potentially contaminated with the patient's bodily fluids. Fresh gloves shall be used for every intraoral patient contact. Gloves shall not be washed or reused for any purpose. The same pair of gloves shall not be used, removed, and reused for the same patient at the same visit or for any other purpose. Gloves that have been used for denturist treatment shall not be reused for any nondenturist purpose.

(b) Masks shall be worn by the denturist and direct care staff when splatter or aerosol is likely.

(c) Unless effective surface decontamination methods are used, protective barriers shall be placed over areas which are likely to be touched during treatment, not removable to be sterilized, and likely to be contaminated by blood or saliva. These procedures must be followed between each patient. These include but are not limited to:

(i) Delivery unit;

(ii) Chair controls (not including foot controls);

(iii) Light handles;

(iv) Head rest;

(v) Instrument trays;

(vi) Treatment area and laboratory countertops/benches.

(d) Protective eyewear shields shall be worn by the denturist and direct care staff and provided to all patients during times when splatter or aerosol is expected.

(2) Denturists shall comply with the following sterilization requirements:

(a) Every denturist office shall have the capability to ultrasonically clean and sterilize contaminated items by autoclave, dry heat, unsaturated formaldehyde/alcohol vapor (such as MDT Chemiclave®) or ethylene oxide, where adequate ventilation is provided. Sterilizers shall be tested by a biological spore test on at least a weekly basis. In the event of a positive biological spore test, the denturist shall take immediate remedial action to ensure the objectives of (a) of this subsection are accomplished. Documentation shall be maintained either in the form of a log reflecting dates and person(s) conducting the testing or copies of reports from an independent testing entity. The documentation shall be maintained for a period of at least five years.

(b) The following items shall be sterilized by an appropriate autoclave, dry heat, unsaturated formaldehyde/alcohol vapor (such as MDT Chemiclave®) or ethylene oxide sterilization method between patients:

(i) Hand instruments;

(ii) Air-water syringe tips;

(iii) High volume evacuator tips;

(iv) Nose cone sleeves;

(v) Metal impression trays.

(c) Gross debris shall be removed from items prior to sterilization. Ultrasonic disinfectant solution cleaning shall be used whenever possible.

(d) Nondisposable items used in patient care which cannot be autoclaved, dry heat, unsaturated formaldehyde/alcohol vapor (such as MDT Chemiclave®) or ethylene oxide sterilized shall be immersed and ultrasonically cleaned in a chemical sterilant. If such a technique is used, the solution shall be approved by the Environmental Protection Agency and used in accordance with the manufacturer's directions for sterilization.

(e) Items such as impressions contaminated with blood or saliva shall be thoroughly rinsed, appropriately disinfected, placed in and transported to the denturist laboratory in an appropriate case containment device that is properly sealed and separately labeled.

(f) In the laboratory: Ragwheels shall be sterilized or disinfected; patient pumice shall be discarded after each use; and, patient burrs and stones shall be sterilized or disinfected.

[Statutory Authority: RCW 18.30.070(3). 98-20-068, § 246-812-520, filed 10/2/98, effective 11/2/98; 95-22-062, § 246-812-520, filed 10/30/95, effective 11/30/95.]

SUBSTANCE ABUSE MONITORING

WAC 246-812-601 Purpose. The secretary recognizes the need to establish a means of proactively providing early recognition and treatment options for denturists whose competency may be impaired due to the abuse of drugs or alcohol. The secretary intends that such denturists be treated and their treatment monitored so that they can return to or continue to practice their profession in a way which safeguards the public. To accomplish this the secretary shall approve voluntary substance abuse monitoring programs and shall refer denturists impaired by substance abuse to approved programs as an alternative to instituting disciplinary proceedings as defined in RCW 18.130.160.

[Statutory Authority: RCW 18.30.070(3). 98-20-068, § 246-812-601, filed 10/2/98, effective 11/2/98; 95-22-062, § 246-812-601, filed 10/30/95, effective 11/30/95.]

WAC 246-812-610 Definitions. The following general terms are defined within the context used in this chapter:

"Aftercare" is that period of time after intensive treatment that provides the denturist and the denturist's family with group or individual counseling sessions, discussions with other families, ongoing contact and participation in self-help groups and ongoing continued support of treatment program staff.

"Approved substance abuse monitoring program" or **"approved monitoring program"** is a program the secretary has determined meets the requirements of the law and the criteria established by the secretary in WAC 246-812-620 which enters into a contract with denturists who have substance abuse problems regarding the required components of the denturist's recovery activity and oversees the denturist's compliance with these requirements. Substance abuse monitoring programs do not provide evaluation or treatment to participating denturists.

"Approved treatment facility" is a facility approved by the bureau of alcohol and substance abuse, department of social and health services according to RCW 70.96A.020(2) or 69.54.030 to provide intensive alcoholism or drug treatment if located within Washington state. Drug and alcohol treatment programs located out-of-state must be equivalent to the standards required for approval under RCW 70.96A.020 (2) or 69.54.030.

"Contract" is a comprehensive, structured agreement between the recovering denturist and the approved monitoring program stipulating the denturist's consent to comply with the monitoring program and its required components of the denturist's recovery activity.

"Health care professional" is an individual who is licensed, certified, or registered in Washington to engage in the delivery of health care to patients.

"Random drug screens" are laboratory tests to detect the presence of drugs of abuse in body fluids which are performed at irregular intervals not known in advance by the person being tested.

"Substance abuse" means the impairment, as determined by the secretary, of a denturist's professional services by an addiction to, a dependency on, or the use of alcohol, legend drugs, or controlled substances.

"Support group" is a group of health care professionals meeting regularly to support the recovery of its members. The group provides a confidential setting with a trained and experienced health care professional facilitator in which denturists may safely discuss drug diversion, licensure issues, return to work, and other professional issues related to recovery.

"Twelve-step groups" are groups such as alcoholics anonymous, narcotics anonymous, and related organizations based on a philosophy of anonymity, belief in a power outside of oneself, a peer group association, and self-help.

[Statutory Authority: RCW 18.30.070(3). 98-20-068, § 246-812-610, filed 10/2/98, effective 11/2/98; 95-22-062, § 246-812-610, filed 10/30/95, effective 11/30/95.]

WAC 246-812-620 Approval of substance abuse monitoring programs. The secretary shall approve the monitoring program(s) which shall participate in the substance abuse monitoring program. A monitoring program approved by the secretary may be contracted with an entity outside the department but within the state, out-of-state, or a separate structure within the department.

(1) The approved monitoring program shall not provide evaluation or treatment to the participating denturist.

(2) The approved monitoring program staff must have the qualifications and knowledge of both substance abuse and the practice of denturism as defined in this chapter to be able to evaluate:

(a) Clinical laboratories;

(b) Laboratory results;

(c) Providers of substance abuse treatment, both individuals and facilities;

(d) Support groups;

(e) The denturist work environment; and

(f) The ability of the denturist to practice with reasonable skill and safety.

(3) The approved monitoring program shall enter into a contract with the denturist and the secretary to oversee the denturist's compliance with the requirements of the program.

(4) The approved monitoring program may make exceptions to individual components of the contract on an individual basis.

(5) The approved monitoring program staff shall recommend, on an individual basis, whether a denturist shall be prohibited from engaging in the practice of denturism for a period of time and restrictions, if any, on the denturist's access to controlled substances in the work place.

(6) The approved monitoring program shall maintain records on participants.

(7) The approved monitoring program shall be responsible for providing feedback to the denturist as to whether treatment progress is acceptable.

(8) The approved monitoring program shall report to the secretary any denturist who fails to comply with the requirements of the monitoring program.

(9) The approved monitoring program shall receive from the secretary guidelines on treatment, monitoring, and limitations on the practice of denturism for those participating in the program.

[Statutory Authority: RCW 18.30.070(3). 98-20-068, § 246-812-620, filed 10/2/98, effective 11/2/98; 95-22-062, § 246-812-620, filed 10/30/95, effective 11/30/95.]

WAC 246-812-630 Participation in approved substance abuse monitoring program. (1) In lieu of disciplinary action, the denturist may accept secretary referral into the approved substance abuse monitoring program.

(a) The denturist shall undergo a complete physical and psychosocial evaluation before entering the approved monitoring program. This evaluation shall be performed by health care professional(s) with expertise in chemical dependency. The person(s) performing the evaluation shall not also be the provider of the recommended treatment.

(b) The denturist shall enter into a contract with the secretary and the approved substance abuse monitoring program to comply with the requirements of the program which shall include, but not be limited to:

(i) The denturist shall undergo intensive substance abuse treatment in an approved treatment facility.

(ii) The denturist shall agree to remain free of all mind-altering substances including alcohol except for medications prescribed by an authorized prescriber, as defined in RCW 69.41.030 and 69.50.101.

(iii) The denturist must complete the prescribed aftercare program of the intensive treatment facility, which may include individual and/or group psychotherapy.

(iv) The treatment counselor(s) shall provide reports to the approved monitoring program at specified intervals. Reports shall include treatment, prognosis, and goals.

(v) The denturist shall submit to random drug screening as specified by the approved monitoring program.

(vi) The denturist shall attend support groups facilitated by a health care professional and/or twelve-step group meetings as specified by the contract.

(vii) The denturist shall comply with specified employment conditions and restrictions as defined by the contract.

(viii) The denturist shall sign a waiver allowing the approved monitoring program to release information to the secretary if the denturist does not comply with the requirements of this contract.

(c) The denturist is responsible for paying the costs of the physical and psychosocial evaluation, substance abuse treatment, and random drug screens.

(d) The denturist may be subject to disciplinary action under RCW 18.130.160, if the denturist does not consent to be referred to the approved monitoring program, does not comply with specified employment restrictions, or does not successfully complete the program.

(2) A denturist who is not being investigated by the secretary or subject to current disciplinary action or currently being monitored by the secretary for substance abuse may voluntarily participate in the approved substance abuse monitoring program without being referred by the secretary. Such voluntary participants shall not be subject to disciplinary action under RCW 18.130.160 for their substance abuse, and shall not have their participation made known to the secretary if they meet the requirements of the approved monitoring program as defined in subsection (1) of this section.

(3) The treatment and pretreatment records of license holders referred to or voluntarily participating in approved monitoring programs shall be confidential, shall be exempt from RCW 42.17.250 through 42.17.450 and shall not be subject to discovery by subpoena or admissible as evidence except for monitoring records reported to the disciplinary authority for cause as defined in subsection (1) of this section. Records held by the secretary under this section shall be exempt from RCW 42.17.250 through 42.17.450 and shall not be subject to discovery by subpoena except by the license holder.

[Statutory Authority: RCW 18.30.070(3). 98-20-068, § 246-812-630, filed 10/2/98, effective 11/2/98; 95-22-062, § 246-812-630, filed 10/30/95, effective 11/30/95.]

FEES

WAC 246-812-990 Denturist fees and renewal cycle. (1) Licenses must be renewed every year on the practitioner's birthday as provided in chapter 246-12 WAC, Part 2. The secretary may require payment of renewal fees less than those established in this section if the current level of fees is likely to result in a surplus of funds. Surplus funds are those in excess of the amount necessary to pay for the costs of administering the program and to maintain a reasonable reserve. Notice of any adjustment in the required payment will be provided to practitioners. The adjustment in the required payment shall remain in place for the duration of a renewal cycle to assure practitioners an equal benefit from the adjustment.

(2) The following nonrefundable fees will be charged:

Title of Fee	Fee
Application	$1,450.00
Examination	1,500.00
Reexamination, written	500.00
Reexamination, practical	500.00
License renewal	1,600.00
Late renewal penalty	300.00
Expired license reissuance	300.00
Inactive license renewal	750.00
Expired inactive license reissuance	300.00
Duplicate license	15.00
Certification of license	25.00
Multiple location licenses	50.00

[Statutory Authority: RCW 43.70.110, 43.70.250, 2008 c 329. 08-15-014, § 246-812-990, filed 7/7/08, effective 7/7/08. Statutory Authority: RCW 43.70.250, [43.70.]280 and 43.70.110. 05-12-012, § 246-812-990, filed 5/20/05, effective 7/1/05. Statutory Authority: RCW 43.70.250 and chapter 18.30 RCW. 00-07-050, § 246-812-990, filed 3/8/00, effective 4/8/00. Statutory Authority: RCW 18.30.070(3). 98-20-068, § 246-812-990, filed 10/2/98, effective 11/2/98. Statutory Authority: RCW 43.70.280. 98-05-060, § 246-812-990, filed 2/13/98, effective 3/16/98. Statutory Authority: RCW 18.30.070(3). 95-22-062, § 246-812-990, filed 10/30/95, effective 11/30/95.]

Chapter 246-814 WAC
ACCESS TO DENTAL CARE FOR CHILDREN

WAC

246-814-010 Purpose.
246-814-020 Practices authorized.
246-814-030 Application process and documentation of training required to qualify for endorsement.
246-814-040 Training and the provision of services.
246-814-990 Endorsement fees for dental assistants and dental hygienists, renewal of endorsement not required.

WAC 246-814-010 Purpose. The purpose of this chapter is to implement RCW 18.29.220 and 18.32.226. These laws are intended to improve access to dental care for low-income, rural, and other at-risk children by enhancing the authority of dental hygienists and dental assistants to provide dental sealant and fluoride varnish treatments in school-based programs. The department of health encourages partnerships within geographical regions and among participants in the oral health care community in implementing this law.

[Statutory Authority: RCW 43.70.650. 02-21-128, § 246-814-010, filed 10/23/02, effective 11/23/02.]

WAC 246-814-020 Practices authorized. (1) **Dental hygienists.** Solely for purposes of providing services under this chapter, dental hygienists holding endorsements under this chapter may assess by determining the need for (i.e., the absence of gross carious lesions and sealants) and acceptability of dental sealant and/or fluoride varnish treatment for children in school-based programs and may apply dental sealants and fluoride varnish treatments, without the supervision of a licensed dentist. This determination does not include or involve diagnosing conditions or constitute a dental examination.

(2) **Dental assistants.** A dental assistant is currently defined by the Dental Quality Assurance Commission in WAC 246-817-510 as an unlicensed person working under the *close* supervision of a licensed dentist. Solely for purposes of this chapter, authorized dental assistants may apply dental sealants and fluoride varnish treatments to children in school-based programs under the *general* supervision of a Washington state licensed dentist, as described in this chapter.

(a) *Close supervision* requires the licensed supervising dentist to first determine the need for and acceptability of dental sealant and fluoride varnish treatments, refer the treatment and the dentist must be in the treatment facility when the treatment is provided.

(b) *General supervision* requires the licensed supervising dentist to first determine the need for and acceptability of dental sealant and fluoride varnish treatments, refer the treatment and the dentist does not have to be in the treatment facility when the treatment is provided.

(3) Dental assistants and their supervising dentists, as well as dental hygienists shall coordinate with local public health jurisdictions and local oral health coalitions prior to providing services under this chapter, consistent with RCW 18.29.220 and 18.32.226.

[Statutory Authority: RCW 43.70.650. 02-21-128, § 246-814-020, filed 10/23/02, effective 11/23/02.]

WAC 246-814-030 Application process and documentation of training required to qualify for endorsement. (1) The department of health has issued endorsements to all dental hygienists holding valid licenses on or before April 19, 2001, the effective date of RCW 18.29.220.

(2) Dental hygienists licensed after April 19, 2001, must obtain an endorsement to provide services under this chapter. Applicants must meet the additional requirements in RCW 18.29.220 and must submit the following to the department:

(a) Application for endorsement;

(b) Fee;

(c) Information of having a valid Washington state dental hygiene license for reference; and

(d) Proof of the completion of training that has incorporated the Washington state department of health sealant/fluoride varnish program guidelines as described in WAC 246-814-040(3).

(3) Dental assistants employed by a Washington state licensed dentist on or before April 19, 2001, are not required to obtain an endorsement but may voluntarily do so without having to meet the additional requirements in RCW 18.32.-226.

(4) Dental assistants employed by a Washington state licensed dentist for two hundred hours after April 19, 2001, must obtain an endorsement to provide services under this chapter. Applicants must meet the additional requirements in RCW 18.32.226 and must submit the following to the department:

(a) Application for endorsement;

(b) Fee;

(c) Proof of two hundred hours of employment as a dental assistant by a Washington state licensed dentist that has included theoretical and clinical training in the application of dental sealants and fluoride varnish treatments, verified by a declaration provided by the licensed dentist who provided the training; and

(d) Proof of completion of training that has incorporated the Washington state department of health sealant/fluoride varnish program guidelines as described in WAC 246-814-040(3).

(5) Dental assistants and their supervising dentists, as well as dental hygienists should use the Washington state department of health sealant/fluoride varnish guidelines described in WAC 246-814-040 and other protocols that may be in place for the geographic region when coordinating with local public health jurisdictions. To assist the local public health jurisdictions and the practitioners in coordinating these services, a "letter of understanding" is recommended and would provide a means to address mutual concerns. It may include, but is not limited to:

(a) Data collection requirements;

(b) Delineation of responsibilities of the treatment providers and the local public health jurisdictions;

(c) Quality assurance mechanisms; and

(d) Communication with schools being served.

(6) Dental assistants and their supervising dentists, as well as dental hygienists shall coordinate with the local oral health coalitions by participating in oral health coalition meetings that may be held in the geographical region.

[Statutory Authority: RCW 43.70.650. 02-21-128, § 246-814-030, filed 10/23/02, effective 11/23/02.]

WAC 246-814-040 Training and the provision of services. (1) The "Washington state department of health sealant/fluoride varnish program guidelines" have been developed, maintained and distributed by the department of health in partnership with the oral health community and health care practitioners. To obtain copies of the "guidelines" contact the department of health.

(2) The Washington state department of health sealant/fluoride varnish program guidelines are designed to assist the local public health jurisdictions and oral health care communities in the planning, implementation, and evaluation of school-based dental sealant and fluoride varnish programs. Every school-based dental sealant and fluoride varnish program should design their program to provide, at minimum, for the following:

(a) Assessing and targeting the population.

(b) Establishing community capacity and infrastructure.

(c) Determining staffing needs and training.

(d) Securing equipment and supplies.

(e) Developing policies, procedures and data collection forms.

(f) Scheduling schools/sites.

(g) Preparing sites for implementation.

(h) Providing services.

(i) Evaluating the process and outcomes.

(3) The Washington state department of health sealant/fluoride varnish program guidelines also provides the training required for dental hygienists and dental assistants providing services under this chapter. Applicants for endorsement must obtain training as contained in these specific guidelines, which can be met through any one of the following methods:

(a) Graduation from a dental assisting, dental hygiene or dental educational program, accredited by the American Dental Association, which has incorporated the Washington state department of health sealant/fluoride varnish program guidelines.

(b) Continuing education courses which teach the Washington state department of health sealant/fluoride varnish program guidelines.

(c) Individual training provided by a Washington licensed dentist, which has incorporated the Washington state department of health sealant/fluoride varnish program guidelines.

[Statutory Authority: RCW 43.70.650. 02-21-128, § 246-814-040, filed 10/23/02, effective 11/23/02.]

WAC 246-814-990 Endorsement fees for dental assistants and dental hygienists, renewal of endorsement not required. (1) Endorsements do not require renewal.

(2) Endorsement documents are issued to the qualified applicant, and are not the property of the employer or the supervisor.

(3) The following one-time, nonrefundable fee will be charged:

Dental assistant application/endorsement.	$50
Dental hygiene application/endorsement.	$50

[Statutory Authority: RCW 43.70.650. 02-21-128, § 246-814-990, filed 10/23/02, effective 11/23/02.]

Chapter 246-815 WAC
DENTAL HYGIENISTS

WAC

246-815-020	Dental hygiene examination eligibility.
246-815-030	Education requirements for licensure applicants.
246-815-031	Dental hygiene expanded functions education requirement for licensure implementation.
246-815-050	Examination.
246-815-100	Licensure by interstate endorsement of credentials.
246-815-110	Application procedures for approval of dental hygiene expanded functions education programs.
246-815-115	Exception application procedures for approval of dental hygiene expanded functions education programs.
246-815-120	Standards required for approval of dental hygiene expanded functions education programs.
246-815-130	Curriculum requirements for expanded functions dental hygiene education programs approval.
246-815-140	Continuing education for dental hygienists.
246-815-160	Standards of dental hygiene conduct or practice.
246-815-170	General provisions.
246-815-180	Mandatory reporting.
246-815-190	Health care institutions.
246-815-200	Dental hygienist associations or societies.
246-815-210	Health care service contractors and disability insurance carriers.
246-815-220	Professional liability carriers.
246-815-230	Courts.

246-815-240 State and federal agencies.
246-815-250 Cooperation with investigation.
246-815-260 Off-site supervision.
246-815-990 Dental hygiene fees and renewal cycle.

DISPOSITION OF SECTIONS FORMERLY CODIFIED IN THIS CHAPTER

246-815-040 AIDS prevention and information education requirements. [Statutory Authority: RCW 18.29.130 and 70.24.270. 92-02-018 (Order 224), § 246-815-040, filed 12/23/91, effective 1/23/92. Statutory Authority: RCW 43.70.040. 91-02-049 (Order 121), recodified as § 246-815-040, filed 12/27/90, effective 1/31/91. Statutory Authority: RCW 70.24.270. 88-22-077 (Order PM 786), § 308-25-300, filed 11/2/88.] Repealed by 98-05-060, filed 2/13/98, effective 3/16/98. Statutory Authority: RCW 43.70.280.

246-815-060 Dismissal from examination. [Statutory Authority: Chapter 18.29 RCW and RCW 18.20.150(4). 95-16-102, § 246-815-060, filed 8/1/95, effective 9/1/95. Statutory Authority: RCW 43.70.040. 91-02-049 (Order 121), recodified as § 246-815-060, filed 12/27/90, effective 1/31/91. Statutory Authority: RCW 18.29.031. 84-04-088 (Order PL 459), § 308-25-070, filed 2/1/84. Statutory Authority: RCW 43.24.020 and 43.24.024. 82-06-043 (Order 672), § 308-25-070, filed 3/2/82.] Repealed by 98-14-123, filed 7/1/98, effective 8/1/98. Statutory Authority: RCW 18.29.150 and 18.29.120.

246-815-070 Examination results. [Statutory Authority: Chapter 18.29 RCW and RCW 18.20.150(4). 95-16-102, § 246-815-070, filed 8/1/95, effective 9/1/95. Statutory Authority: RCW 18.29.150(2). 95-02-056, § 246-815-070, filed 1/3/95, effective 2/3/95. Statutory Authority: RCW 43.70.040. 91-02-049 (Order 121), recodified as § 246-815-070, filed 12/27/90, effective 1/31/91. Statutory Authority: Chapter 18.29 RCW, RCW 18.29.021, [18.29.]045 and [18.29.]130. 90-23-011 (Order 098), § 308-25-035, filed 11/13/90, effective 12/14/90. Statutory Authority: RCW 18.29.031. 86-09-014 (Order PL 585), § 308-25-035, filed 4/7/86.] Repealed by 98-14-123, filed 7/1/98, effective 8/1/98. Statutory Authority: RCW 18.29.150 and 18.29.120.

246-815-080 Written examination review procedures. [Statutory Authority: RCW 43.70.040. 91-02-049 (Order 121), recodified as § 246-815-080, filed 12/27/90, effective 1/31/91. Statutory Authority: RCW 18.29.120(5). 90-12-068 (Order 064), § 308-25-037, filed 6/1/90, effective 7/2/90.] Repealed by 98-14-123, filed 7/1/98, effective 8/1/98. Statutory Authority: RCW 18.29.150 and 18.29.120.

246-815-090 Practical examination review procedures. [Statutory Authority: RCW 18.29.120(5). 92-15-033 (Order 284), § 246-815-090, filed 7/7/92, effective 8/7/92. Statutory Authority: RCW 43.70.040. 91-02-049 (Order 121), recodified as § 246-815-090, filed 12/27/90, effective 1/31/91. Statutory Authority: RCW 18.29.120(5). 90-12-068 (Order 064), § 308-25-038, filed 6/1/90, effective 7/2/90.] Repealed by 98-14-123, filed 7/1/98, effective 8/1/98. Statutory Authority: RCW 18.29.150 and 18.29.120.

246-815-150 Renewal of licenses. [Statutory Authority: RCW 43.70.040. 91-02-049 (Order 121), recodified as § 246-815-150, filed 12/27/90, effective 1/31/91. Statutory Authority: RCW 43.24.020 and 43.24.024. 82-06-043 (Order 672), § 308-25-050, filed 3/2/82.] Repealed by 98-05-060, filed 2/13/98, effective 3/16/98. Statutory Authority: RCW 43.70.280.

246-815-300 Reinstatement of a dental hygiene expired license. [Statutory Authority: RCW 18.29.071. 94-04-005, § 246-815-300, filed 1/20/94, effective 2/20/94.] Repealed by 98-05-060, filed 2/13/98, effective 3/16/98. Statutory Authority: RCW 43.70.280.

WAC 246-815-020 Dental hygiene examination eligibility. (1) To be eligible to take the approved dental hygiene examination, the applicant must meet the following requirements:

(a) The applicant must have successfully completed a dental hygiene education program approved by the secretary of the department of health pursuant to WAC 246-815-030.

(b) Applicants must complete seven clock hours of AIDS education as required in chapter 246-12 WAC, Part 8.

(c) The applicant must demonstrate knowledge of Washington law pertaining to the practice of dental hygiene including the administration of legend drugs.

(d) The applicant must complete the required application materials and pay the required fee.

(2) The application must include:

(a) The required examination fee.

(b) Either the national board IBM card reflecting a passing score or a notarized copy of the national board certificate.

(c) One photograph of the applicant taken within one year preceding the application.

(3) An official transcript or certificate of completion constitutes proof of successful completion from an approved dental hygiene education program. No other proof of successful completion is acceptable.

[Statutory Authority: RCW 43.70.280, 18.29.120, 18.29.140, and 18.29.150. 04-20-049, § 246-815-020, filed 10/1/04, effective 11/1/04. Statutory Authority: RCW 43.70.280. 98-05-060, § 246-815-020, filed 2/13/98, effective 3/16/98. Statutory Authority: Chapter 18.29 RCW and RCW 18.20.150(4). 95-16-102, § 246-815-020, filed 8/1/95, effective 9/1/95. Statutory Authority: RCW 18.29.130. 92-02-018 (Order 224), § 246-815-020, filed 12/23/91, effective 1/23/92. Statutory Authority: RCW 43.70.040. 91-02-049 (Order 121), recodified as § 246-815-020, filed 12/27/90, effective 1/31/91. Statutory Authority: Chapter 18.29 RCW, RCW 18.29.021, [18.29.]045 and [18.29.]130. 90-23-011 (Order 098), § 308-25-011, filed 11/13/90, effective 12/14/90.]

WAC 246-815-030 Education requirements for licensure applicants. (1) To be eligible for dental hygiene licensure, the applicant must have successfully completed a dental hygiene education program approved by the secretary of the department of health. The secretary adopts the standards of the American Dental Association Commission on Dental Accreditation ("CODA") relevant to the accreditation of dental hygiene schools, in effect through June 2007. In implementing the adopted standards, the secretary approves those dental hygiene education programs that are currently accredited and received initial "CODA" accreditation on or before June 30, 2007, provided, that the accredited education program's curriculum includes:

(a) Didactic and clinical competency in the administration of injections of local anesthetic;

(b) Didactic and clinical competency in the administration of nitrous oxide analgesia;

(c) Didactic and clinical competency in the placement of restorations into cavities prepared by a dentist; and

(d) Didactic and clinical competency in the carving, contouring, and adjusting contacts and occlusions of restorations.

(2) Dental hygiene education programs approved by the secretary of the department of health pursuant to the American Dental Association Commission on Dental Accreditation standards whose curriculum does not include the didactic and clinical competency enumerated in subsection (1)(a) through (d) of this section will be accepted if the applicant has successfully completed an expanded functions education program(s) approved pursuant to WAC 246-815-110, 246-815-120, and 246-815-130.

(3) A form will be provided in the department of health licensure application packages for the purpose of education verification.

(4) The standards of the American Dental Association Commission on Dental Accreditation relevant to the accreditation of dental hygiene schools are available from the American Dental Association, 211 East Chicago Ave., Chicago, IL 60611-2678, 312-440-2500, http://www.ada.org/.

[Statutory Authority: RCW 18.29.130. 07-22-109, § 246-815-030, filed 11/6/07, effective 12/7/07; 94-05-053, § 246-815-030, filed 2/10/94, effective 3/13/94; 92-02-018 (Order 224), § 246-815-030, filed 12/23/91, effective 1/23/92. Statutory Authority: RCW 43.70.040. 91-02-049 (Order 121), recodified as § 246-815-030, filed 12/27/90, effective 1/31/91. Statutory Authority: Chapter 18.29 RCW, RCW 18.29.021, [18.29.]045 and [18.29.]130. 90-23-011 (Order 098), § 308-25-013, filed 11/13/90, effective 12/14/90.]

WAC 246-815-031 Dental hygiene expanded functions education requirement for licensure implementation. The dental hygiene education requirement for licensure regarding the didactic and clinical competency of the expanded functions referenced in WAC 246-815-030 (1)(a)-(d), (2) and (3) shall become effective February 1, 1993.

[Statutory Authority: RCW 18.29.130(6). 92-03-006 (Order 232), § 246-815-031, filed 1/3/92, effective 2/3/92; 91-11-065 (Order 172), § 246-815-031, filed 5/16/91, effective 6/16/91.]

WAC 246-815-050 Examination. (1) The dental hygiene examination will consist of both written and practical tests approved by the committee, as described in this section. An applicant seeking licensure in Washington by examination must successfully complete all of the following:

(a) The dental hygiene national board examination.

(b) The Washington drug and law examination.

(c) The Western Regional Examining Board (WREB) dental hygiene practical examinations from May 8, 1992.

(i) Patient evaluation clinical competency;

(ii) Prophylaxis clinical competency;

(iii) Anesthesia clinical competency; and

(iv) Restorative clinical competency.

(d) In lieu of the WREB examination (or any of its subparts), the secretary may accept a substantially equivalent examination (or substantially equivalent subparts).

(2) The committee may, at its discretion, give a test in any other phase of dental hygiene. Candidates will receive information concerning each examination.

(3) The applicant will comply with all written instructions provided by the department of health.

[Statutory Authority: RCW 43.70.280, 18.29.120, 18.29.140, and 18.29.-150. 04-20-049, § 246-815-050, filed 10/1/04, effective 11/1/04. Statutory Authority: Chapter 18.29 RCW and RCW 18.20.150(4). 95-16-102, § 246-815-050, filed 8/1/95, effective 9/1/95. Statutory Authority: RCW 18.29.120(2). 95-07-003, § 246-815-050, filed 3/2/95, effective 4/2/95. Statutory Authority: RCW 43.70.040. 91-02-049 (Order 121), recodified as § 246-815-050, filed 12/27/90, effective 1/31/91. Statutory Authority: Chapter 18.29 RCW, RCW 18.29.021, [18.29.]045 and [18.29.]130. 90-23-011 (Order 098), § 308-25-015, filed 11/13/90, effective 12/14/90. Statutory Authority: RCW 18.29.031. 86-09-014 (Order PL 585), § 308-25-015, filed 4/7/86.]

WAC 246-815-100 Licensure by interstate endorsement of credentials. A license to practice as a dental hygienist in Washington may be issued pursuant to RCW 18.29.045 provided the applicant meets the following requirements:

(1) The applicant has successfully completed a dental hygiene education program which is approved by the secretary of the department of health pursuant to WAC 246-815-030.

(2) The applicant has been issued a valid, current, nonlimited license by successful completion of a dental hygiene examination in another state. The other state's current licensing standards must be substantively equivalent to the licensing standards in the state of Washington. The other state's examination must have included the following portions and minimum level of competency standards.

(a) Written tests - the written tests include:

(i) The National Board of Dental Hygiene examination.

(ii) A state written test covering the current dental hygiene subjects that are tested for Washington state.

(b) Practical tests - all portions shall be graded anonymously by calibrated practicing dental hygienists or dental hygienists and dentists. The calibration process shall consist of training sessions which include components to evaluate and confirm each examiners ability to uniformly detect known errors on pregraded patients and/or dentoforms. Examiners will be calibrated to the established standard of minimum level of competency. The examination must have equivalent patient selection criteria for the patient evaluation, prophylaxis and anesthesia portions. The Western Regional Examining Board (WREB) practical tests. In lieu of the WREB practical tests, the secretary may accept substantially equivalent tests. The practical tests include:

(i) Patient evaluation clinical competency;

(ii) Prophylaxis clinical competency;

(iii) Anesthesia clinical competency; and

(iv) Restorative clinical competency.

(3) The applicant holds a valid current license, and has been currently engaged in clinical practice at any time within the previous year as a dental hygienist in another state or in the discharge of official duties in the United States Armed Services, Coast Guard, Public Health Services, Veterans' Bureau, or Bureau of Indian Affairs. Verification of licensure must be obtained from the state of licensure, and any fees for verification required by the state of licensure must be paid by the applicant.

(4) The applicant has not engaged in unprofessional conduct as defined in the Uniform Disciplinary Act in RCW 18.130.180 or is not an impaired practitioner under RCW 18.130.170 in the Uniform Disciplinary Act.

(5) Applicants must complete seven clock hours of AIDS education as required in chapter 246-12 WAC, Part 8.

(6) The applicant demonstrates to the secretary knowledge of Washington law pertaining to the practice of dental hygiene.

(7) The applicant completes the required application materials and pays the required application fee. Applications for licensure by interstate endorsement are available from the department of health dental hygiene program.

(8) If the secretary of the department of health finds that the other state's licensing standards are substantively equivalent except for a portion(s) of the examination, the applicant may take that portion(s) to qualify for interstate endorsement. That portion(s) of the exam must be successfully completed to qualify for interstate endorsement and an additional exam-

ination fee as well as the licensure by interstate endorsement fee shall be required.

[Statutory Authority: RCW 43.70.280, 18.29.120, 18.29.140, and 18.29.150. 04-20-049, § 246-815-100, filed 10/1/04, effective 11/1/04. Statutory Authority: RCW 43.70.280. 98-05-060, § 246-815-100, filed 2/13/98, effective 3/16/98. Statutory Authority: Chapter 18.29 RCW and RCW 18.20.150(4). 95-16-102, § 246-815-100, filed 8/1/95, effective 9/1/95. Statutory Authority: RCW 18.29.045. 93-06-042A (Order 332), § 246-815-100, filed 2/24/93, effective 3/27/93. Statutory Authority: RCW 18.29.130. 92-02-018 (Order 224), § 246-815-100, filed 12/23/91, effective 1/23/92. Statutory Authority: RCW 43.70.040. 91-02-049 (Order 121), recodified as § 246-815-100, filed 12/27/90, effective 1/31/91. Statutory Authority: Chapter 18.29 RCW, RCW 18.29.021, [18.29.]045 and [18.29.]130. 90-23-011 (Order 098), § 308-25-041, filed 11/13/90, effective 12/14/90.]

WAC 246-815-110 Application procedures for approval of dental hygiene expanded functions education programs. (1) The representative of the education program must complete the required application materials and pay the required nonrefundable fee.

(2) Applications for approval of dental hygiene expanded functions education programs are available from the department of health, dental hygiene program.

(3) The application shall include but is not limited to a self study guide which reflects WAC 246-815-120 and 246-815-130.

(4) The application may include a site visit and evaluation at the discretion of the secretary of the department of health.

(5) An approved dental hygiene expanded function education program shall report in writing all modifications of the approved program to the department of health and shall be required to pay the nonrefundable evaluation fee if the secretary of the department determines that the modification(s) substantially affects an area included in WAC 246-815-120.

[Statutory Authority: RCW 43.70.280, 18.29.120, 18.29.140, and 18.29.150. 04-20-049, § 246-815-110, filed 10/1/04, effective 11/1/04. Statutory Authority: RCW 18.29.130. 92-02-018 (Order 224), § 246-815-110, filed 12/23/91, effective 1/23/92. Statutory Authority: RCW 43.70.040. 91-02-049 (Order 121), recodified as § 246-815-110, filed 12/27/90, effective 1/31/91. Statutory Authority: Chapter 18.29 RCW, RCW 18.29.021, [18.29.]045 and [18.29.]130. 90-23-011 (Order 098), § 308-25-072, filed 11/13/90, effective 12/14/90.]

WAC 246-815-115 Exception application procedures for approval of dental hygiene expanded functions education programs. (1) This section applies only to dental hygiene programs:

(a) Currently accredited by the American Dental Association Commission on Dental Accreditation; and

(b) With accredited program curriculum that includes the administration of local anesthetic, administration of nitrous oxide analgesia and restorative dentistry.

(2) A program representative may apply for approval of a dental hygiene expanded function(s) education program by submitting to the department:

(a) An application on forms available from the department of health, dental hygiene program.

(b) The current and the proposed expanded function course outlines and syllabuses, and:

(i) An identification of the differences between the current and proposed courses;

(ii) Documentation of the differences between the current and proposed courses.

(3) The program representative shall not submit a self study guide or an application fee.

(4) The department may, at the secretary's discretion, conduct a site visit and evaluation.

(5) The representative of an approved expanded function education program shall report all modifications of the approved program to the department in writing.

[Statutory Authority: RCW 43.70.280, 18.29.120, 18.29.140, and 18.29.150. 04-20-049, § 246-815-115, filed 10/1/04, effective 11/1/04. Statutory Authority: RCW 18.29.130(6) and 18.29.021 (1)(a). 92-03-126 (Order 236), § 246-815-115, filed 1/21/92, effective 2/21/92.]

WAC 246-815-120 Standards required for approval of dental hygiene expanded functions education programs. The standards for approval by the secretary of the department of health of dental hygiene expanded functions education programs shall include:

(1) Administration. Administrative structure must insure the attainment of program goals. Administration must include formal provisions for program planning, development, staffing, direction, coordination and evaluation.

(2) Curriculum. The curriculum must be defined in terms of program goals, general and specific instructional objectives, learning experiences designed to achieve goals and objectives and evaluation procedures to assess attainment of goals and objectives.

(a) Instructional objectives shall be defined in the cognitive, psychomotor and affective domains which are consistent with and contributory to the attainment of program goals.

(b) Written documentation of all aspects of the curriculum, including comprehensive course outlines, must be prepared by the faculty.

(c) There must be mechanisms for ongoing curriculum evaluation, revision and implementation.

(3) Admissions. Admission of dental hygiene students must be based upon specific written criteria, procedures and policies.

(a) The program administrator and faculty, in cooperation with appropriate college personnel, shall establish admission criteria procedures and policies that will be followed in accepting students.

(b) Civil rights and nondiscriminatory policies must be observed in admitting students.

(4) Faculty. The program shall be staffed by faculty who are well qualified in curricular subject matter, dental hygiene functions and educational methodology.

(5) Facilities. Physical facilities and equipment must be adequate to permit achievement of dental hygiene program objectives. Facilities shall effectively accommodate the number of students, faculty and staff and include appropriate provisions for safety.

(6) Learning resources. A wide range of printed materials and instructional aids and equipment shall be available for utilization by students and faculty.

(7) Students. Policies and procedures to protect and serve students must be established and implemented.

(a) Ethical standards and policies to protect the students as consumers and avenues for appeal and due process must be provided.

(b) Student records should accurately reflect work accomplished in the program and be maintained in a secure manner.

(8) Assess outcomes. The program must regularly evaluate the degree to which its goals are being met through a formal assessment of outcomes. Approved programs must design and implement their own outcome measures to determine the degree to which their stated goals and objectives are met.

[Statutory Authority: RCW 43.70.040. 91-02-049 (Order 121), recodified as § 246-815-120, filed 12/27/90, effective 1/31/91. Statutory Authority: Chapter 18.29 RCW, RCW 18.29.021, [18.29.]045 and [18.29.]130. 90-23-011 (Order 098), § 308-25-073, filed 11/13/90, effective 12/14/90.]

WAC 246-815-130 Curriculum requirements for expanded functions dental hygiene education programs approval. (1) Curriculum for expanded function dental hygiene education programs approved by the secretary of the department of health shall include:

(a) Instruction in the administration of injections of a local anesthetic.

(i) The basic curriculum shall require didactic and clinical competency.

(ii) Demonstration of clinical proficiency in each of the following functions:

Infiltration: ASA, MSA, Nasopalatine, greater palatine.

Block: Long buccal, mental, inferior alveolar and PSA.

(b) Instruction in the administration of nitrous oxide analgesia. The basic curriculum shall require didactic and clinical competency.

(c) Instruction in restorative dentistry and specifically how to place restorations into a cavity prepared by the dentist and thereafter carve, contour, and adjust contacts and occlusion of the restoration. The basic curriculum shall require didactic and clinical competency.

(2) Representatives of expanded function dental hygiene education programs may apply for approval of one or more of (1)(a)-(c) above. Approval of the specific expanded function(s) will be based on the applicable curriculum listed in (1)(a)-(c) above.

(3) It shall be the responsibility of the approved expanded functions education program to evaluate the students curriculum needs on an individual basis for successful completion of their approved program.

[Statutory Authority: RCW 43.70.040. 91-02-049 (Order 121), recodified as § 246-815-130, filed 12/27/90, effective 1/31/91. Statutory Authority: Chapter 18.29 RCW, RCW 18.29.021, [18.29.]045 and [18.29.]130. 90-23-011 (Order 098), § 308-25-074, filed 11/13/90, effective 12/14/90.]

WAC 246-815-140 Continuing education for dental hygienists. (1) Purposes. The secretary of the department of health in consultation with the dental hygiene examining committee has determined that the public health, safety and welfare will be served by requiring all holders of dental hygiene licenses granted under chapter 18.29 RCW to continue their education after receiving such licenses.

(2) Requirements. Licensed dental hygienists must complete 15 clock hours of continuing education as required in chapter 246-12 WAC, Part 7. A current CPR card must be maintained as part of this requirement.

(3) Acceptable continuing education. Continuing education must be dental related education for professional development as a dental hygienist. The 15 clock hours shall be obtained through continuing education courses, correspondence courses, college credit courses, dental hygiene examination standardization/calibration workshops and dental hygiene examination item writer workshops.

[Statutory Authority: RCW 43.70.280. 98-05-060, § 246-815-140, filed 2/13/98, effective 3/16/98. Statutory Authority: RCW 43.70.040. 91-02-049 (Order 121), recodified as § 246-815-140, filed 12/27/90, effective 1/31/91. Statutory Authority: Chapter 18.29 RCW, RCW 18.29.021, [18.29.]045 and [18.29.]130. 90-23-011 (Order 098), § 308-25-180, filed 11/13/90, effective 12/14/90.]

WAC 246-815-160 Standards of dental hygiene conduct or practice. The purpose of defining standards of dental hygiene conduct or practice is to identify minimum responsibilities of the registered dental hygienist licensed in Washington in health care settings and as provided in the Dental Hygiene Practice Act, chapter 18.29 RCW, and the Uniform Disciplinary Act, chapter 18.130 RCW. The standards provide consumers with information about quality care and provides the secretary guidelines to evaluate safe and effective care. Upon entering the practice of dental hygiene, each individual assumes the responsibility, public trust, and a corresponding obligation to adhere to the standards of dental hygiene practice.

(1) Dental hygiene provision of care.

The dental hygienist shall:

(a) Accurately and systematically collect, permanently record, and update data on the general and oral health status of the client.

(b) Communicate collected data to the appropriate health care professional.

(c) Take into consideration the dental hygiene assessment, the client treatment goals, appropriate sequencing of procedures, and currently accepted scientific knowledge in developing a dental hygiene plan.

(i) The dental hygiene plan shall include preventative and therapeutic care to promote and maintain the clients' oral health.

(ii) Where appropriate, the dental hygiene plan shall be compatible with the treatment plan of other licensed health care professionals.

(d) Communicate the dental hygiene plan to the client and/or legal guardian.

The client and/or legal guardian or where appropriate other **health care professionals** are to be informed of the **progress** and **results** of dental hygiene care and clients' self-care.

(e) Continually reevaluate client progress related to the attainment of their oral health goals. Implement additional dental hygiene treatment and client self-care as appropriate.

(2) Professional responsibilities.

The licensed dental hygienist shall have knowledge of the statutes and regulations governing dental hygiene practice and shall function within the legal scope of dental hygiene practice.

[Statutory Authority: RCW 18.29.130, 18.29.076 and 18.130.050. 92-02-018 (Order 224), § 246-815-160, filed 12/23/91, effective 1/23/92. Statutory Authority: RCW 43.70.040. 91-02-049 (Order 121), recodified as § 246-815-160, filed 12/27/90, effective 1/31/91. Statutory Authority: RCW

18.29.076 and 18.130.050(12). 89-16-096 (Order PM 858), § 308-25-170, filed 8/2/89, effective 9/2/89.]

WAC 246-815-170 General provisions. (1) "Unprofessional conduct" as used in this chapter shall mean the conduct described in RCW 18.130.180.

(2) "Hospital" means any health care institution licensed pursuant to chapter 70.41 RCW.

(3) "Nursing home" means any health care institution which comes under chapter 18.51 RCW.

(4) "Department" means the department of health.

(5) "Dental hygienist" means a person licensed pursuant to chapter 18.29 RCW.

(6) "Mentally or physically disabled dental hygienist" means a dental hygienist who is currently mentally incompetent or mentally ill as determined by a court, or who is unable to practice dental hygiene with reasonable skill and safety to patients by reason of any mental or physical condition and who continues to practice while so impaired.

[Statutory Authority: RCW 18.29.130 and 18.130.070. 92-02-018 (Order 224), § 246-815-170, filed 12/23/91, effective 1/23/92. Statutory Authority: RCW 43.70.040. 91-02-049 (Order 121), recodified as § 246-815-170, filed 12/27/90, effective 1/31/91. Statutory Authority: RCW 18.130.070. 89-14-092 (Order PM 842), § 308-25-080, filed 6/30/89.]

WAC 246-815-180 Mandatory reporting. (1) All reports required by this chapter shall be submitted to the department as soon as possible, but no later than twenty days after a determination is made.

(2) A report should contain the following information if known:

(a) The name, address, and telephone number of the person making the report.

(b) The name and address and telephone numbers of the dental hygienist being reported.

(c) The case number of any client whose treatment is a subject of the report.

(d) A brief description or summary of the facts which gave rise to the issuance of the report, including dates of occurrences.

(e) If court action is involved, the name of the court in which the action is filed along with the date of filing and docket number.

(f) Any further information which would aid in the evaluation of the report.

(3) Mandatory reports shall be exempt from public inspection and copying to the extent permitted under RCW 42.17.310 or to the extent that public inspection or copying of the report or any portion of the report would invade or violate a person's right to privacy as set forth in RCW 42.17.255.

(4) A person is immune from civil liability, whether direct or derivative, for providing information to the department pursuant to RCW 18.130.070.

[Statutory Authority: RCW 43.70.040. 91-02-049 (Order 121), recodified as § 246-815-180, filed 12/27/90, effective 1/31/91. Statutory Authority: RCW 18.130.070. 89-14-092 (Order PM 842), § 308-25-090, filed 6/30/89.]

WAC 246-815-190 Health care institutions. The chief administrator or executive officer or their designee of any hospital or nursing home shall report to the department when any dental hygienist's services are terminated or are restricted based on a determination that the dental hygienist has either committed an act or acts which may constitute unprofessional conduct or that the dental hygienist may be unable to practice with reasonable skill or safety to the client by reason of a mental or physical condition.

[Statutory Authority: RCW 43.70.040. 91-02-049 (Order 121), recodified as § 246-815-190, filed 12/27/90, effective 1/31/91. Statutory Authority: RCW 18.130.070. 89-14-092 (Order PM 842), § 308-25-100, filed 6/30/89.]

WAC 246-815-200 Dental hygienist associations or societies. The president or chief executive officer of any dental hygienist association or society within this state shall report to the department when an association or society determines that a dental hygienist has committed unprofessional conduct or that a dental hygienist may not be able to practice dental hygiene with reasonable skill and safety to clients as the result of any mental or physical condition. The report required by this section shall be made without regard to whether the license holder appeals, accepts, or acts upon the determination made by the association or society. Notification of appeal shall be included.

[Statutory Authority: RCW 43.70.040. 91-02-049 (Order 121), recodified as § 246-815-200, filed 12/27/90, effective 1/31/91. Statutory Authority: RCW 18.130.070. 89-14-092 (Order PM 842), § 308-25-110, filed 6/30/89.]

WAC 246-815-210 Health care service contractors and disability insurance carriers. The executive officer of every health care service contractor and disability insurer, licensed under chapters 48.20, 48.21, 48.21A, and 48.44 RCW, operating in the state of Washington shall report to the department all final determinations that a dental hygienist has engaged in fraud in billing for services.

[Statutory Authority: RCW 43.70.040. 91-02-049 (Order 121), recodified as § 246-815-210, filed 12/27/90, effective 1/31/91. Statutory Authority: RCW 18.130.070. 89-14-092 (Order PM 842), § 308-25-120, filed 6/30/89.]

WAC 246-815-220 Professional liability carriers. Every institution or organization providing professional liability insurance directly or indirectly to dental hygienists shall send a complete report to the department of any malpractice settlement, award, or payment in excess of twenty thousand dollars as a result of a claim or action for damages alleged to have been caused by an insured dental hygienist's incompetency or negligence in the practice of dental hygiene. Such organization or institution shall also report the award, settlement, or payment of three or more claims during a twelve-month period as a result of the dental hygienist's alleged incompetence or negligence in the practice of dental hygiene.

[Statutory Authority: RCW 43.70.040. 91-02-049 (Order 121), recodified as § 246-815-220, filed 12/27/90, effective 1/31/91. Statutory Authority: RCW 18.130.070. 89-14-092 (Order PM 842), § 308-25-130, filed 6/30/89.]

WAC 246-815-230 Courts. The department requests the assistance of the clerk of trial courts within the state to report all professional malpractice judgments and all convictions of licensed dental hygienists, other than minor traffic violations.

[Statutory Authority: RCW 43.70.040. 91-02-049 (Order 121), recodified as § 246-815-230, filed 12/27/90, effective 1/31/91. Statutory Authority: RCW 18.130.070. 89-14-092 (Order PM 842), § 308-25-140, filed 6/30/89.]

WAC 246-815-240 State and federal agencies. The department requests the assistance of executive officers of any state or federal program operating in the state of Washington, under which a dental hygienist is employed to provide client care services, to report to the department whenever such a dental hygienist has been judged to have demonstrated his/her incompetency or negligence in the practice of dental hygiene, or has otherwise committed unprofessional conduct, or is a mentally or physically disabled dental hygienist. These requirements do not supersede any federal or state law.

[Statutory Authority: RCW 43.70.040. 91-02-049 (Order 121), recodified as § 246-815-240, filed 12/27/90, effective 1/31/91. Statutory Authority: RCW 18.130.070. 89-14-092 (Order PM 842), § 308-25-150, filed 6/30/89.]

WAC 246-815-250 Cooperation with investigation. (1) A licensee must comply with a request for records, documents, or explanation from an investigator who is acting on behalf of the secretary of the department of health by submitting the requested items within fourteen calendar days of receipt of the request by either the licensee or their attorney, whichever is first. If the licensee fails to comply with the request within fourteen calendar days, the investigator will contact that individual or their attorney by telephone or letter as a reminder.

(2) Investigators may extend the time for response if the request for extension does not exceed seven calendar days. Any other requests for extension of time may be granted by the secretary or the secretary's designee.

(3) If the licensee fails to comply with the request within three business days after receiving the reminder, a subpoena will be served to obtain the requested items. A statement of charges may be issued pursuant to RCW 18.130.180(8) for failure to cooperate. If there is sufficient evidence to support additional charges, those charges may be included in the statement of charges.

(4) If the licensee complies with the request after the issuance of the statement of charges, the secretary or the secretary's designee will decide if the charges will be prosecuted or settled. If the charges are to be settled the settlement proposal will be negotiated by the secretary's designee. Settlements are not considered final until the secretary signs the settlement agreement.

[Statutory Authority: RCW 18.29.130 and 18.130.070. 92-02-018 (Order 224), § 246-815-250, filed 12/23/91, effective 1/23/92. Statutory Authority: RCW 43.70.040. 91-02-049 (Order 121), recodified as § 246-815-250, filed 12/27/90, effective 1/31/91. Statutory Authority: RCW 18.130.070. 89-14-092 (Order PM 842), § 308-25-160, filed 6/30/89.]

WAC 246-815-260 Off-site supervision. Off-site supervision means that a licensed dental hygienist has entered into a written practice plan under RCW 18.29.056 with a dentist licensed in Washington. The dentist must agree to be available for contact as documented in the practice plan. The dental hygienist must submit the practice plan to the department for approval. Off-site supervision does not require the physical presence of the supervising dentist at the treatment site.

[Statutory Authority: RCW 18.29.130 and 18.29.056. 08-12-076, § 246-815-260, filed 6/3/08, effective 7/4/08.]

WAC 246-815-990 Dental hygiene fees and renewal cycle. (1) Licenses must be renewed every year on the practitioner's birthday as provided in chapter 246-12 WAC, Part 2. The secretary may require payment of renewal fees less than those established in this section if the current level of fees is likely to result in a surplus of funds. Surplus funds are those in excess of the amount necessary to pay for the costs of administering the program and to maintain a reasonable reserve. Notice of any adjustment in the required payment will be provided to practitioners. The adjustment in the required payment shall remain in place for the duration of a renewal cycle to assure practitioners an equal benefit from the adjustment.

(2) The following nonrefundable fees will be charged:

Title of Fee	Fee
Application examination and reexamination	$100.00
Renewal	50.00
Late renewal penalty	50.00
Expired license reissuance	50.00
Credentialing application	100.00
Limited license application	100.00
Limited license renewal	50.00
Limited license late renewal penalty	50.00
Expired limited license reissuance	50.00
Duplicate license	15.00
Certification of license	25.00
Education program evaluation	200.00

[Statutory Authority: RCW 43.70.110, 43.70.250, 2008 c 329. 08-15-014, § 246-815-990, filed 7/7/08, effective 7/7/08. Statutory Authority: RCW 43.70.250, [43.70.]280 and 43.70.110. 05-12-012, § 246-815-990, filed 5/20/05, effective 7/1/05. Statutory Authority: RCW 43.70.250. 05-01-018, § 246-815-990, filed 12/2/04, effective 3/22/05; 03-07-095, § 246-815-990, filed 3/19/03, effective 7/1/03. Statutory Authority: RCW 43.70.280. 98-05-060, § 246-815-990, filed 2/13/98, effective 3/16/98. Statutory Authority: Chapter 18.29 RCW and RCW 18.20.150(4). 95-16-102, § 246-815-990, filed 8/1/95, effective 9/1/95. Statutory Authority: RCW 43.70.250. 94-02-059, § 246-815-990, filed 1/3/94, effective 3/1/94. Statutory Authority: RCW 43.70.250 and 1993 c 323. 93-16-073, § 246-815-990, filed 8/2/93, effective 9/2/93. Statutory Authority: RCW 43.70.250. 91-13-002 (Order 173), § 246-815-990, filed 6/6/91, effective 7/7/91. Statutory Authority: RCW 43.70.040. 91-02-049 (Order 121), recodified as § 246-815-990, filed 12/27/90, effective 1/31/91. Statutory Authority: RCW 43.70.250. 90-04-094 (Order 029), § 308-25-065, filed 2/7/90, effective 3/10/90. Statutory Authority: RCW 43.24.086. 87-10-028 (Order PM 650), § 308-25-065, filed 5/1/87. Statutory Authority: 1983 c 168 § 12. 83-17-031 (Order PL 442), § 308-25-065, filed 8/10/83. Formerly WAC 308-25-060.]